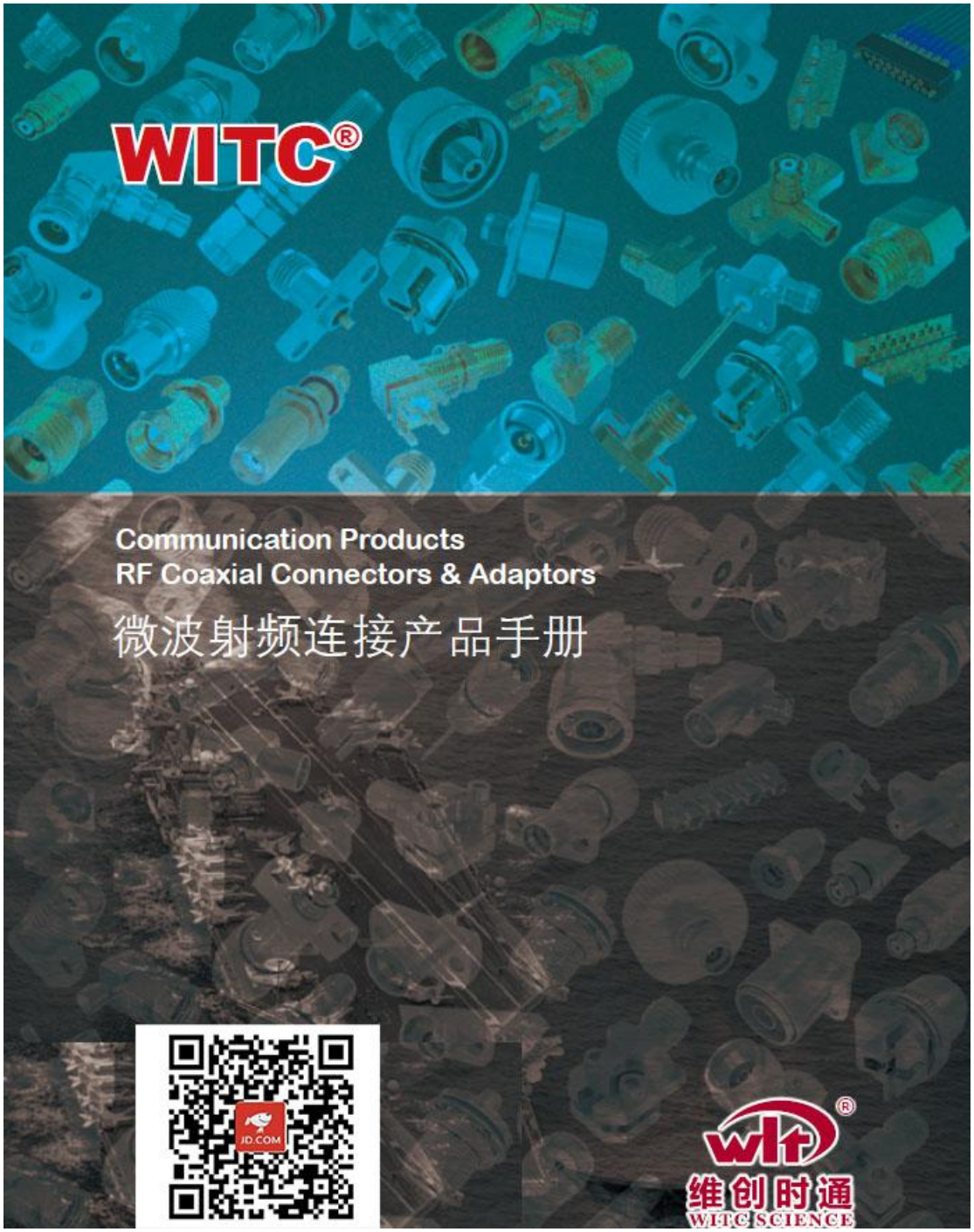

2.92mm 系列母头射频连接器适配 PCB 板卡

WITC

产品型号/Type	产品编号/Part No.	适配电缆/Suitable cables	剥线尺寸/Cable shortening dimension
2.92-KZTD1	21-011S-AAD1	PCB	

RoHS

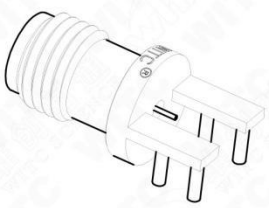

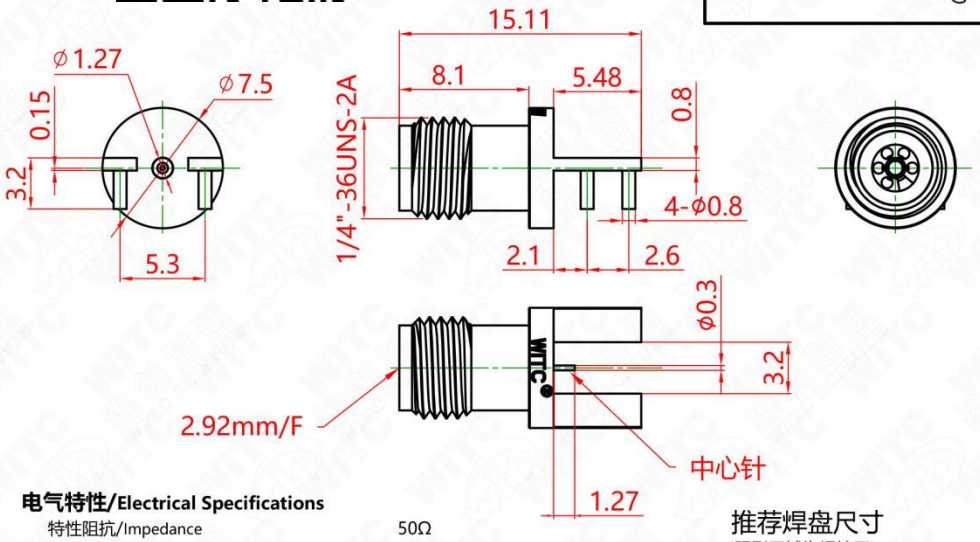

电气特性/Electrical Specifications

特性阻抗/Impedance	50Ω
频率范围/Frequency Range	DC-40GHz
驻波/VSWR	1.35(Max)
插损/Insertion loss	≤ 0.05 xSQRT(f(GHz)) dB
中心导体接触电阻/Center contact resistance	≤ 3.0 mΩ
外导体接触电阻/Outer contact resistance	≤ 2.0 mΩ
测试电压/Test voltage	750 V rms

推荐焊盘尺寸
(阴影区域为焊接区)

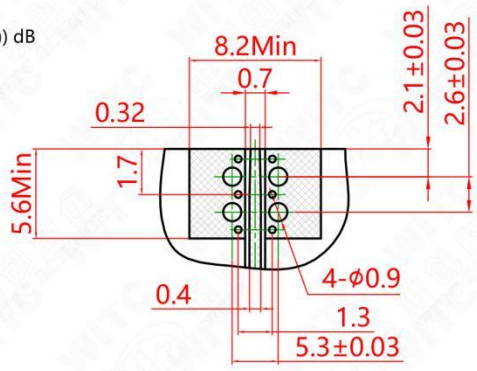

机械参数/Mechanical Data

中心连接方式/Center contact	焊接/Soldered
外导体连接方式/Outer contact	焊接/Soldered
耐久性/Connector Durability	≥500
中心针保持力/Center contact captivation:	
轴向/Axial	≥ 27 N
径向/Radial	≥ 3 Ncm

材料/Material Data

零件/Piece Parts	材料/Material	镀层/Surface Plating
中心导体/Center contact	铍青铜/Beryllium bronze	镀金/Gold Plating (Nickel underplated)
外导体/Outer contact	黄铜/Brass	镀金/Gold Plating (Nickel underplated)
绝缘体/Insulator	聚醚酰亚胺/PEI	

环境参数/Environmental Data

使用温度/Operating Temperature	-65℃ to 85℃
耐热温度/Temperature resistance	185℃

版本/REV.	1.0	投影方向/Direction of view		未注公差尺寸的极限偏差按IT15:	日期/ 15.12.08

https://item.jd.com/10211149736497.html

WITC

2.92-KFDG1	21-1608-SAD1	PCB

RoHS

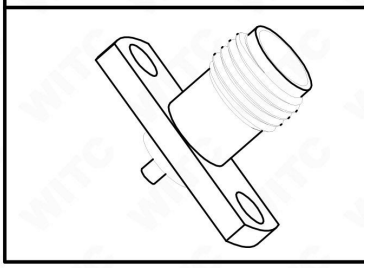

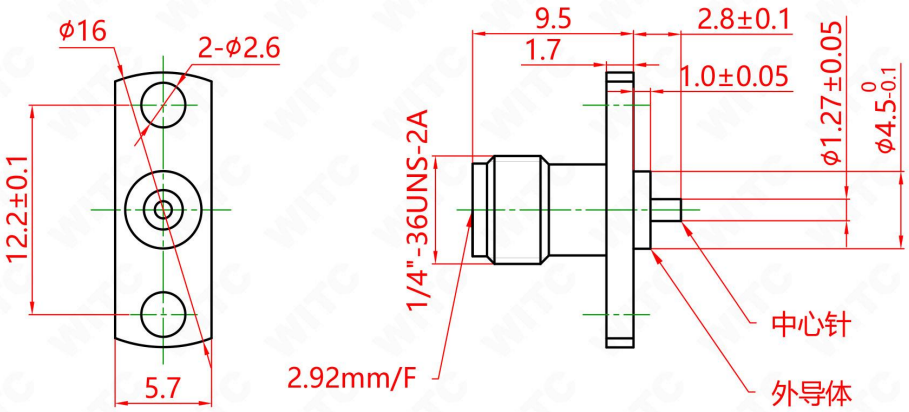

电气特性/Electrical Specifications

特性阻抗/Impedance	50Ω
频率范围/Frequency Range	DC-40GHz
驻波/VSWR	1.30(Max)
插损/Insertion loss	≤ 0.04 xSQT(f(GHz)) dB
中心导体接触电阻/Center contact resistance	≤ 3.0 mΩ
外导体接触电阻/Outer contact resistance	≤ 2.0 mΩ
测试电压/Test voltage	750 V rms

安装开孔尺寸

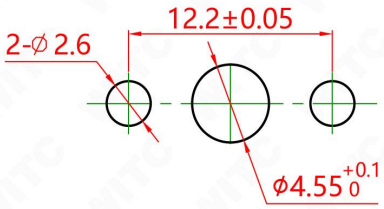

机械参数/Mechanical Data

中心连接方式/Center contact	焊接/Soldered
外导体连接方式/Outer contact	法兰安装/Flange mounting
耐久性/Connector Durability	≥500
中心针保持力/Center contact captivation:	
轴向/Axial	≥ 27 N
径向/Radial	≥ 3 Ncm

材料/Material Data

零件/Piece Parts	材料/Material	镀层/Surface Plating
中心导体/Center contact	铍青铜/Beryllium bronze	镀金/Gold Plating (Nickel underplated)
外导体/Outer contact	不锈钢/Stainless steel	钝化/Passivated
绝缘体/Insulator	聚醚酰亚胺/PEI	

环境参数/Environmental Data

使用温度/Operating Temperature	-65℃ to 85℃
耐热温度/Temperature resistance	185℃

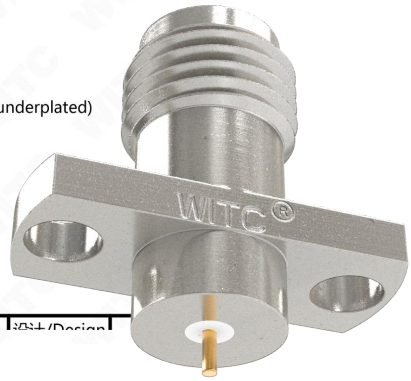

https://item.jd.com/10211120626789.html

WITC

产品型号/Type	产品编号/Part No.	适配电缆/Suitable cables	剥线尺寸/Cable shortening dimension
2.92-KFDG2	21-1608-SAD2	PCB	

RoHS

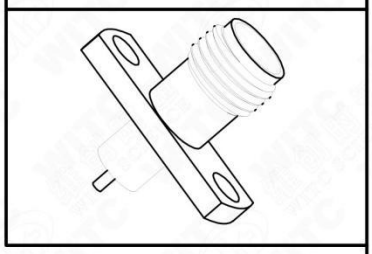

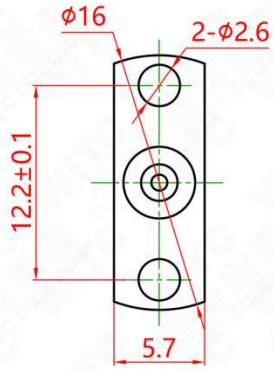

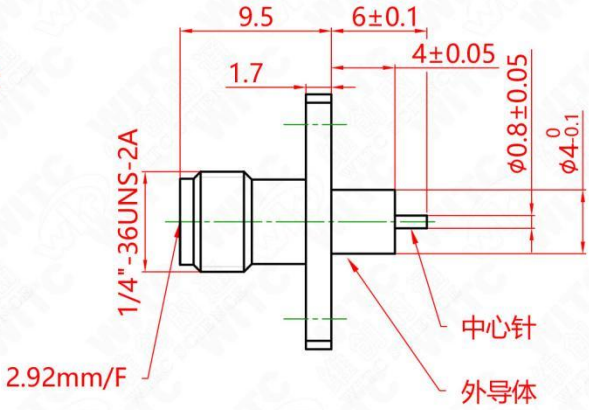

电气特性/Electrical Specifications

特性阻抗/Impedance	50Ω
频率范围/Frequency Range	DC-40GHz
驻波/VSWR	1.30(Max)
插损/Insertion loss	≤ 0.04 xSQRT(f(GHz)) dB
中心导体接触电阻/Center contact resistance	≤ 3.0 mΩ
外导体接触电阻/Outer contact resistance	≤ 2.0 mΩ
介质耐压 /Dielectric Withstanding Voltage	≥500 V rms (sea leveal)

安装开孔尺寸

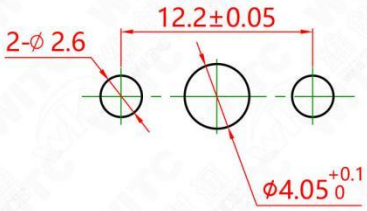

机械参数/Mechanical Data

中心连接方式/Center contact	焊接/Soldered
外导体连接方式/Outer contact	法兰安装/Flange mounting
耐久性/Connector Durability	≥500
中心针保持力/Center contact captivation:	
轴向/Axial	≥ 27 N
径向/Radial	≥ 3 Ncm

材料/Material Data

零件/Piece Parts	材料/Material	镀层/Surface Plating
中心导体/Center contact	铍青铜/Beryllium bronze	镀金/Gold Plating (Nickel underplated)
外导体/Outer contact	不锈钢/Stainless steel	钝化/Passivated
绝缘体/Insulator	聚醚酰亚胺/PEI	

环境参数/Environmental Data

使用温度/Operating Temperature	-65℃ to 85℃
耐热温度/Temperature resistance	185℃

版本/REV.	1.0	投影方向/Direction of view		未注公差尺寸的极限偏差按IT15级

https://item.jd.com/10213783522456.html

WITC

2.92-KFDG3	21-1608-SAD3	PCB

RoHS

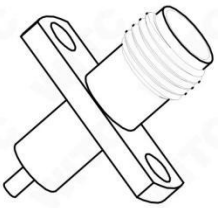

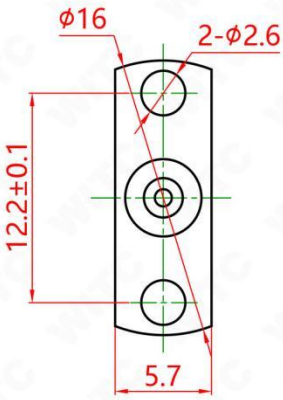

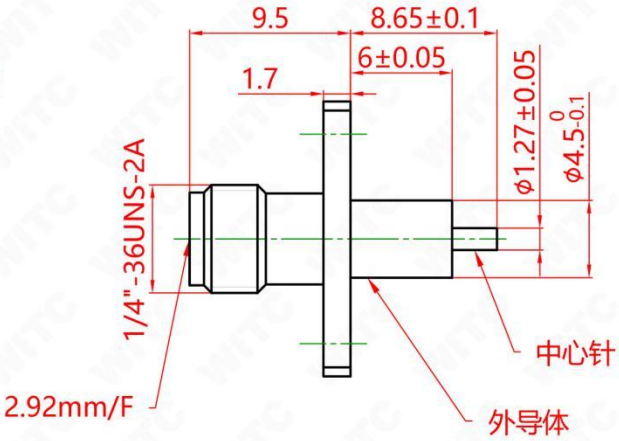

电气特性/Electrical Specifications

特性阻抗/Impedance	50Ω
频率范围/Frequency Range	DC-40GHz
驻波/VSWR	1.30(Max)
插损/Insertion loss	≤ 0.04 xSQT(f(GHz)) dB
中心导体接触电阻/Center contact resistance	≤ 3.0 mΩ
外导体接触电阻/Outer contact resistance	≤ 2.0 mΩ
测试电压/Test voltage	750 V rms

安装开孔尺寸

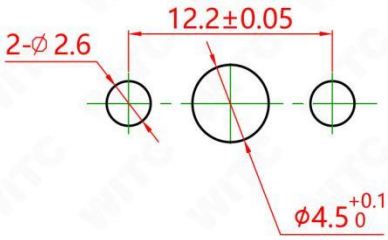

机械参数/Mechanical Data

中心连接方式/Center contact	焊接/Soldered
外导体连接方式/Outer contact	法兰安装/Flange mounting
耐久性/Connector Durability	≥500
中心针保持力/Center contact captivation:	
轴向/Axial	≥ 27 N
径向/Radial	≥ 3 Ncm

材料/Material Data

零件/Piece Parts	材料/Material	镀层/Surface Plating
中心导体/Center contact	铍青铜/Beryllium bronze	镀金/Gold Plating (Nickel underplated)
外导体/Outer contact	不锈钢/Stainless steel	钝化/Passivated
绝缘体/Insulator	聚醚酰亚胺/PEI	

环境参数/Environmental Data

使用温度/Operating Temperature	-65℃ to 85℃
耐热温度/Temperature resistance	185℃

https://item.jd.com/10213783211096.html

WITC

产品型号/Type	产品编号/Part No.	适配电缆/Suitable cables	剥线尺寸/Cable shortening dimension
2.92-KFDG4	21-1608-SAD4	PCB	

RoHS

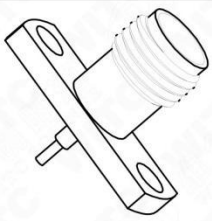

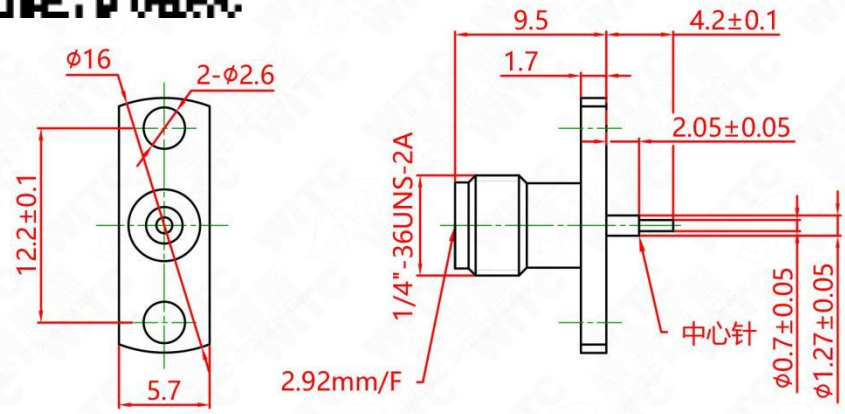

电气特性/Electrical Specifications

特性阻抗/Impedance	50Ω
频率范围/Frequency Range	DC-40GHz
驻波/VSWR	1.30(Max)
插损/Insertion loss	≤ 0.04 xSQT(f(GHz)) dB
中心导体接触电阻/Center contact resistance	≤ 3.0 mΩ
外导体接触电阻/Outer contact resistance	≤ 2.0 mΩ
测试电压/Test voltage	750 V rms

安装开孔尺寸

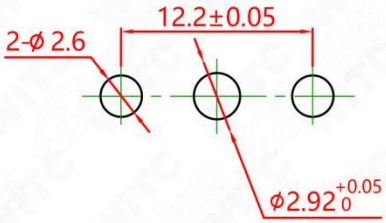

机械参数/Mechanical Data

中心连接方式/Center contact	焊接/Soldered
外导体连接方式/Outer contact	法兰安装/Flange mounting
耐久性/Connector Durability	≥500
中心针保持力/Center contact captivation:	
轴向/Axial	≥ 27 N
径向/Radial	≥ 3 Ncm

材料/Material Data

零件/Piece Parts	材料/Material	镀层/Surface Plating
中心导体/Center contact	铍青铜/Beryllium bronze	镀金/Gold Plating (Nickel underplated)
外导体/Outer contact	不锈钢/Stainless steel	钝化/Passivated
绝缘体/Insulator	聚醚酰亚胺/PEI	

环境参数/Environmental Data

使用温度/Operating Temperature	-65℃ to 85℃
耐热温度/Temperature resistance	185℃

版本/REV.	1.0	投影方向/Direction of view		未注公差尺寸的极限偏差按IT17级

https://item.jd.com/10213783677953.html

WITC

产品型号/Type	产品编号/Part No.	适配电缆/Suitable cables	剥线尺寸/Cable shortening dimension
2.92-KFDG5	21-1608-SAD5	PCB	

RoHS

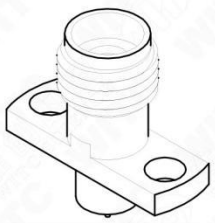

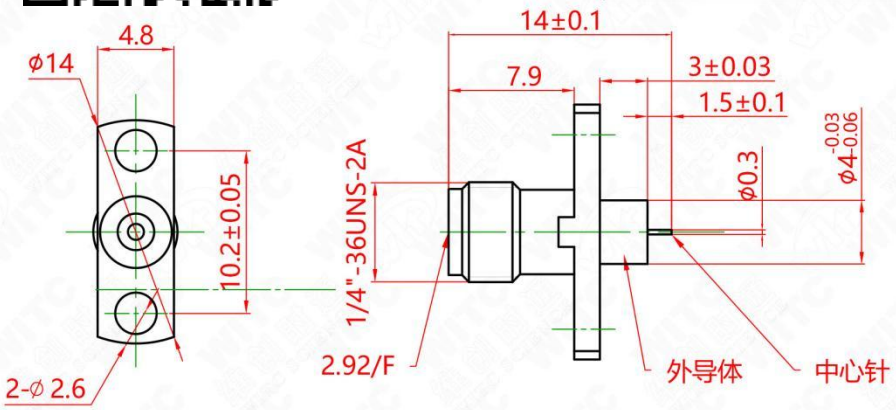

电气特性/Electrical Specifications

特性阻抗/Impedance	50Ω
频率范围/Frequency Range	DC-40GHz
驻波/VSWR	1.30(Max)
插损/Insertion loss	≤ 0.04 xSQRT(f(GHz)) dB
中心导体接触电阻/Center contact resistance	≤ 3.0 mΩ
外导体接触电阻/Outer contact resistance	≤ 2.0 mΩ
介质耐压 /Dielectric Withstanding Voltage	≥500 V rms (sea leveal)

安装开孔尺寸

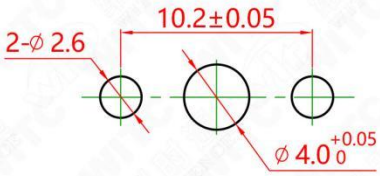

机械参数/Mechanical Data

中心连接方式/Center contact	焊接/Soldered
外导体连接方式/Outer contact	法兰安装/Flange mounting
耐久性/Connector Durability	≥500
中心针保持力/Center contact captivation:	
轴向/Axial	≥ 27 N
径向/Radial	≥ 3 Ncm

材料/Material Data

零件/Piece Parts	材料/Material	镀层/Surface Plating
中心导体/Center contact	铍青铜/Beryllium bronze	镀金/Gold Plating (Nickel underplated)
外导体/Outer contact	不锈钢/Stainless steel	钝化/Passivated
绝缘体/Insulator	聚四氟乙烯,聚醚酰亚胺/PEI,PTFE	

环境参数/Environmental Data

使用温度/Operating Temperature	-65℃ to 85℃
耐热温度/Temperature resistance	185℃

版本/REV.	2.0	投影方向/Direction of view		未注公差尺寸的极限偏差按IT17级

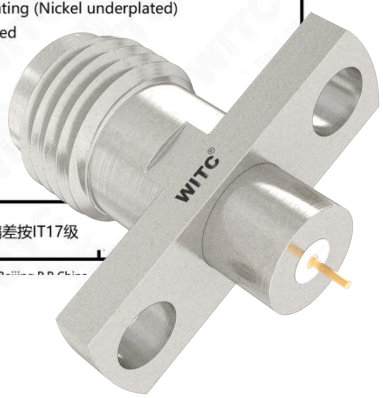

https://item.jd.com/10211120278547.html

WITC

产品型号/Type	产品编号/Part No.	适配电缆/Suitable cables	剥线尺寸/Cable shortening dimension
2.92-KFDG7	21-1608-SAD7	PCB	

RoHS

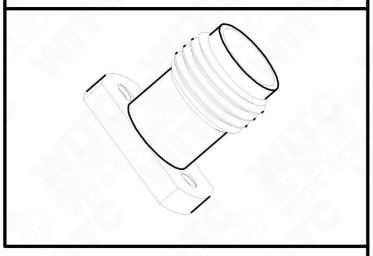

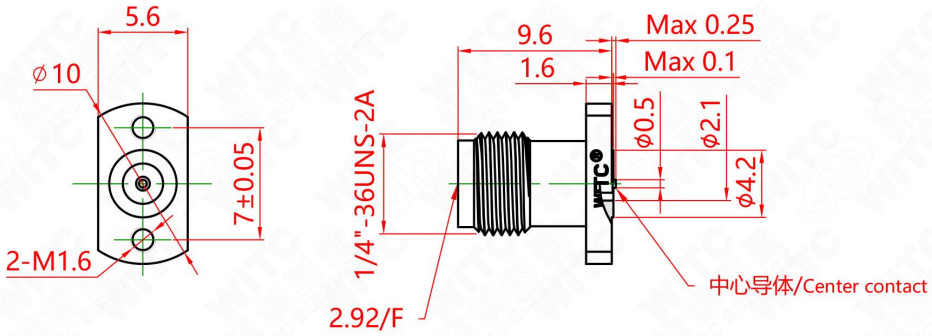

电气特性/Electrical Specifications

特性阻抗/Impedance	50Ω
频率范围/Frequency Range	DC-40GHz
驻波/VSWR	1.30(Max)
插损/Insertion loss	≤ 0.04 xSQT(f(GHz)) dB
中心导体接触电阻/Center contact resistance	≤ 3.0 mΩ
外导体接触电阻/Outer contact resistance	≤ 2.0 mΩ
测试电压/Test voltage	750 V rms

PCB 尺寸/ PCB LAYOUT
(阴影区域为接触区)

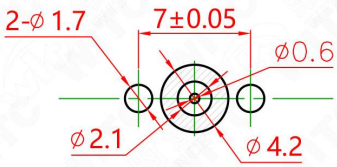

机械参数/Mechanical Data

中心连接方式/Center contact	焊接/Soldered
外导体连接方式/Outer contact	法兰安装/Flange mounting
耐久性/Connector Durability	≥500
中心针保持力/Center contact captivation:	
轴向/Axial	≥ 27 N
径向/Radial	≥ 3 Ncm

材料/Material Data

零件/Piece Parts	材料/Material	镀层/Surface Plating
中心导体/Center contact	铍青铜/Beryllium bronze	镀金/Gold Plating (Nickel underplated)
外导体/Outer contact	不锈钢/Stainless steel	钝化/Passivated
绝缘体/Insulator	聚四氟乙烯,聚醚酰亚胺/PTFE,PEI	

环境参数/Environmental Data

使用温度/Operating Temperature	-55℃ to 85℃
耐热温度/Temperature resistance	110℃

版本/REV.	2.0	投影方向/Direction of view		未注公差尺寸的极限偏差按IT17级

https://item.jd.com/10213782044541.html

WITC

产品型号/Type	产品编号/Part No.	适配电缆/Suitable cables	剥线尺寸/Cable shortening dimension
2.92-KFDG9	21-1608-SAD9	PCB	

RoHS

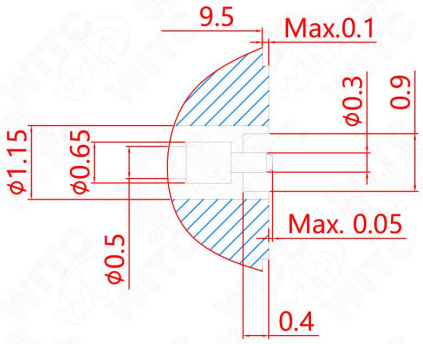

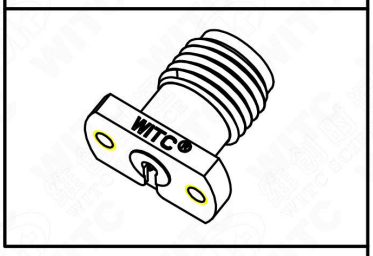

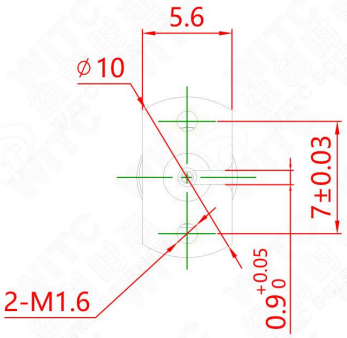

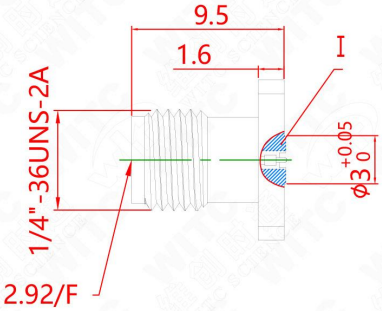

电气特性/Electrical Specifications

特性阻抗/Impedance	50Ω
频率范围/Frequency Range	DC-40GHz
回波损耗/Return loss	≥ 20dB, DC to 26.5 GHz
	≥ 15dB, 26.5GHz to 40 GHz
插损/Insertion loss	≤ 0.04xSQRT(f(GHz)) dB
中心导体接触电阻/Center contact resistance	≤ 3.0 mΩ
外导体接触电阻/Outer contact resistance	≤ 2.0 mΩ
测试电压/Test voltage	750 V rms

PCB 尺寸/ PCB LAYOUT

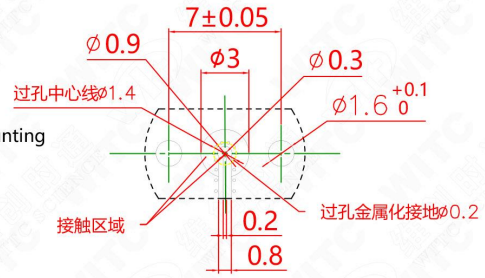

机械参数/Mechanical Data

中心连接方式/Center contact	焊接/Soldered
外导体连接方式/Outer contact	法兰安装/Flange mounting
耐久性/Connector Durability	≥500
中心针保持力/Center contact captivation:	
轴向/Axial	≥ 27 N
径向/Radial	≥ 3 Ncm

材料/Material Data

零件/Piece Parts	材料/Material	镀层/Surface Plating
中心导体/Center contact	铍青铜/Beryllium bronze	镀金/Gold Plating (Nickel underplated)
外导体/Outer contact	不锈钢/Stainless steel	钝化/Passivated
绝缘体/Insulator	聚醚酰亚胺/PEI	

环境参数/Environmental Data

使用温度/Operating Temperature	-55℃ to 85℃
耐热温度/Temperature resistance	110℃

版本/REV.	1.0	投影方向/Direction of view		未注公差尺寸的极限偏差按IT15级

https://item.jd.com/10213782257799.html

WITC

2.92-KFDG13	21-1608-SAD13	PCB

RoHS

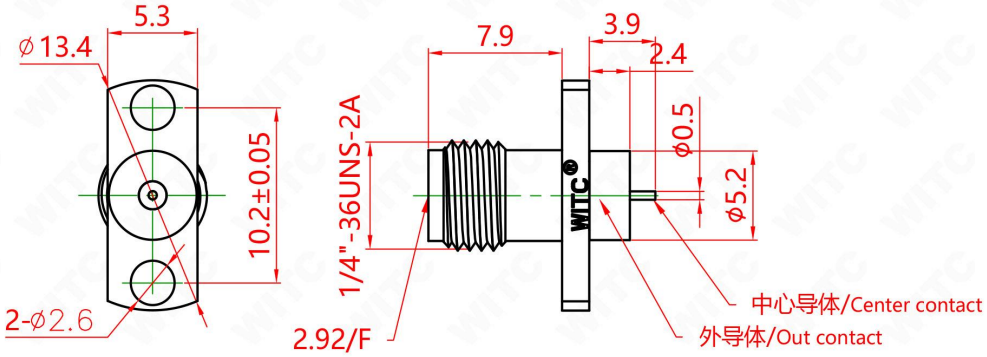

电气特性/Electrical Specifications

特性阻抗/Impedance	50Ω
频率范围/Frequency Range	DC-40GHz
驻波/VSWR	1.30(Max)
插损/Insertion loss	≤ 0.04 xSQT(f(GHz)) dB
中心导体接触电阻/Center contact resistance	≤ 3.0 mΩ
外导体接触电阻/Outer contact resistance	≤ 2.0 mΩ
测试电压/Test voltage	750 V rms

参考安装开孔尺寸

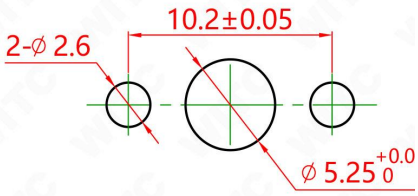

机械参数/Mechanical Data

中心连接方式/Center contact	焊接/Soldered
外导体连接方式/Outer contact	法兰安装/Flange mounting
耐久性/Connector Durability	≥500
中心针保持力/Center contact captivation:	
轴向/Axial	≥ 27 N
径向/Radial	≥ 3 Ncm

材料/Material Data

零件/Piece Parts	材料/Material	镀层/Surface Plating
中心导体/Center contact	铍青铜/Beryllium bronze	镀金/Gold Plating (Nickel underplated)
外导体/Outer contact	不锈钢/Stainless steel	钝化/Passivated
绝缘体/Insulator	聚醚酰亚胺/PEI	

环境参数/Environmental Data

使用温度/Operating Temperature	-55℃ to 85℃

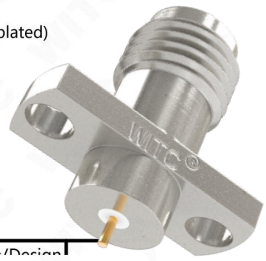

https://item.jd.com/10213780861176.html

WITC

产品型号/Type	产品编号/Part No.	适配电缆/Suitable cables	剥线尺寸/Cable shortening dimension
2.92-KFD10	21-1608-AAD10	PCB	

RoHS

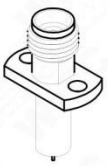

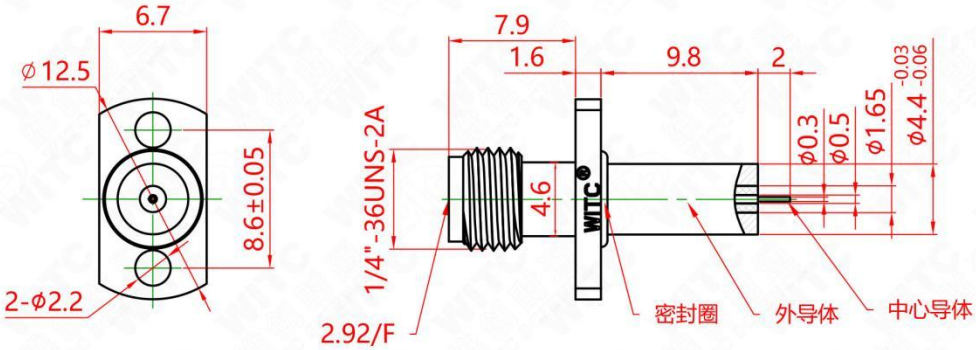

电气特性/Electrical Specifications

特性阻抗/Impedance	50Ω
频率范围/Frequency Range	DC-40GHz
驻波/VSWR	1.30(Max)
插损/Insertion loss	≤ 0.04 xSQRT(f(GHz)) dB
中心导体接触电阻/Center contact resistance	≤ 3.0 mΩ
外导体接触电阻/Outer contact resistance	≤ 2.0 mΩ
介质耐压 /Dielectric withstanding voltage	≥500 V

参考安装开孔尺寸

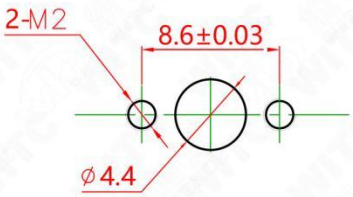

机械参数/Mechanical Data

中心连接方式/Center contact	焊接/Soldered
外导体连接方式/Outer contact	法兰安装/Flange mounting
耐久性/Connector Durability	≥500
中心针保持力/Center contact captivation:	
轴向/Axial	≥ 27 N
径向/Radial	≥ 3 Ncm

材料/Material Data

零件/Piece Parts	材料/Material	镀层/Surface Plating
中心导体/Center contact	铍青铜/Beryllium bronze	镀金/Gold Plating (Nickel underplated)
外导体/Outer contact	黄铜/Brass	镀金/Gold Plating (Nickel underplated)
绝缘体/Insulator	聚醚酰亚胺,聚四氟乙烯/PEI，PTFE	
密封圈/Gasket	硅橡胶/Silicone rubbe	红色/Red

环境参数/Environmental Data

使用温度/Operating Temperature	-65℃ to 85℃

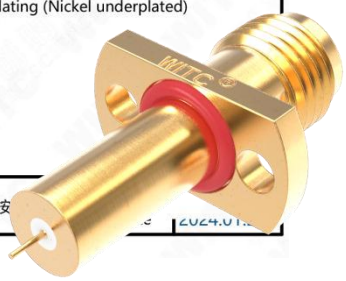

版本/REV.	2.0	投影方向/Direction of view		未注公差尺寸的极限偏差按

https://item.jd.com/10211119713584.html

WITC

产品型号/Type	产品编号/Part No.	适配电缆/Suitable cables	剥线尺寸/Cable shortening dimension
2.92-KFD11	21-1608-AAD11	PCB	

RoHS

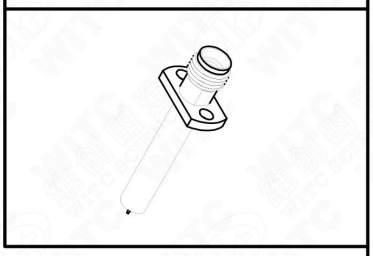

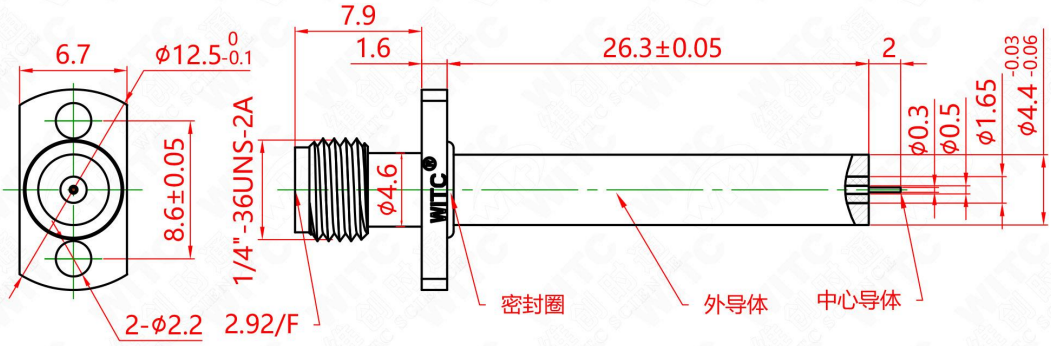

电气特性/Electrical Specifications

特性阻抗/Impedance	50Ω
频率范围/Frequency Range	DC-40GHz
驻波/VSWR	1.35(Max)
插损/Insertion loss	≤ 0.04 xSQRT(f(GHz)) dB
中心导体接触电阻/Center contact resistance	≤ 3.0 mΩ
外导体接触电阻/Outer contact resistance	≤ 2.0 mΩ
介质耐压 /Dielectric withstanding voltage	≥500 V

参考安装开孔尺寸

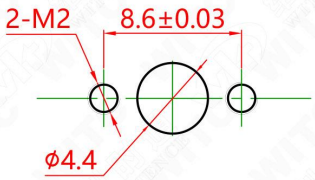

机械参数/Mechanical Data

中心连接方式/Center contact	焊接/Soldered
外导体连接方式/Outer contact	法兰安装/Flange mounting
耐久性/Connector Durability	≥500
中心针保持力/Center contact captivation:	
轴向/Axial	≥ 27 N
径向/Radial	≥ 3 Ncm

材料/Material Data

零件/Piece Parts	材料/Material	镀层/Surface Plating
中心导体/Center contact	铍青铜/Beryllium bronze	镀金/Gold Plating (Nickel underplated)
外导体/Outer contact	黄铜/Brass	镀金/Gold Plating (Nickel underplated)
绝缘体/Insulator	聚醚酰亚胺,聚四氟乙烯/PEI，PTFE	
密封圈/Gasket	硅橡胶/Silicone rubbe	红色/Red

环境参数/Environmental Data

使用温度/Operating Temperature	-65℃ to 85℃

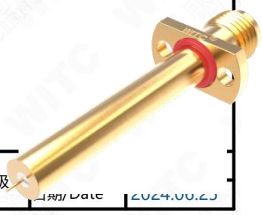

版本/REV.	1.0	投影方向/Direction of view		未注公差尺寸的极限偏差按IT15级	日期/Date	2024.06.25

https://item.jd.com/10213784656619.html

WITC

产品型号/Type	产品编号/Part No.	适配电缆/Suitable cables	剥线尺寸/Cable shortening dimension
2.92-KFD12	21-1608-AAD12	PCB	

RoHS

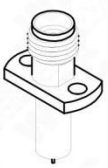

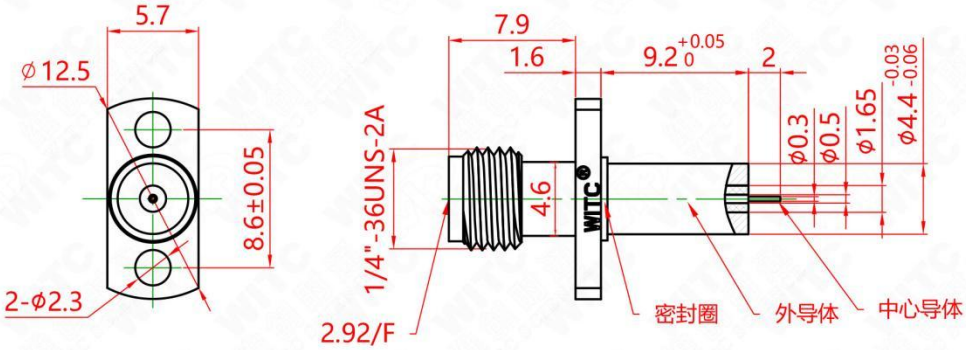

电气特性/Electrical Specifications

特性阻抗/Impedance	50Ω
频率范围/Frequency Range	DC-40GHz
驻波/VSWR	1.20(Max)
插损/Insertion loss	≤ 0.04 xSQRT(f(GHz)) dB
中心导体接触电阻/Center contact resistance	≤ 3.0 mΩ
外导体接触电阻/Outer contact resistance	≤ 2.0 mΩ
介质耐压 /Dielectric withstanding voltage	≥500 V

参考安装开孔尺寸

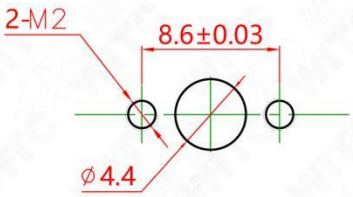

机械参数/Mechanical Data

中心连接方式/Center contact	焊接/Soldered
外导体连接方式/Outer contact	法兰安装/Flange mounting
耐久性/Connector Durability	≥500
中心针保持力/Center contact captivation:	
轴向/Axial	≥ 27 N
径向/Radial	≥ 3 Ncm

材料/Material Data

零件/Piece Parts	材料/Material	镀层/Surface Plating
中心导体/Center contact	铍青铜/Beryllium bronze	镀金/Gold Plating (Nickel underplated)
外导体/Outer contact	黄铜/Brass	镀金/Gold Plating (Nickel underplated)
绝缘体/Insulator	聚醚酰亚胺,聚四氟乙烯/PEI，PTFE	
密封圈/Gasket	硅橡胶/Silicone rubbe	红色/Red

环境参数/Environmental Data

使用温度/Operating Temperature	-65℃ to 85℃

版本/REV.	1.0	投影方向/Direction of view		未注公差尺寸的极限偏差按

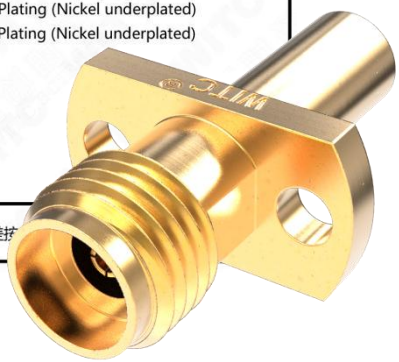

https://item.jd.com/10213784859535.html

WITC

产品型号/Type	产品编号/Part No.	适配电缆/Suitable cables	剥线尺寸/Cable shortening dimension
2.92-KFYDG1	21-1612-SAD1	玻珠/Glass bead	

RoHS

安装方式

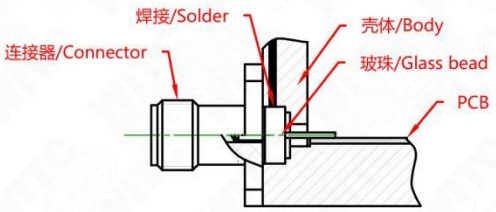

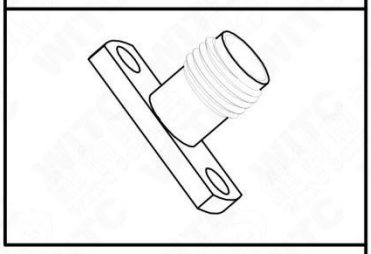

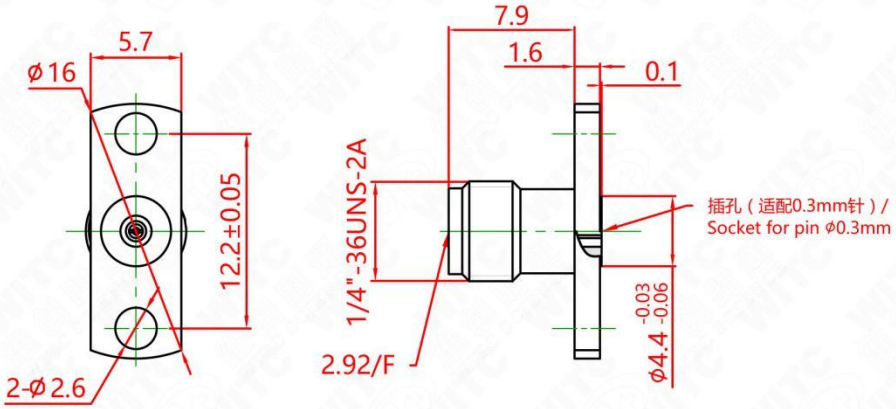

电气特性/Electrical Specifications

特性阻抗/Impedance	50Ω
频率范围/Frequency Range	DC-40GHz
驻波/VSWR	1.30(Max)
插损/Insertion loss	≤ 0.04 xSQT(f(GHz)) dB
中心导体接触电阻/Center contact resistance	≤ 3.0 mΩ
外导体接触电阻/Outer contact resistance	≤ 2.0 mΩ
测试电压/Test voltage	750 V rms

安装开孔尺寸

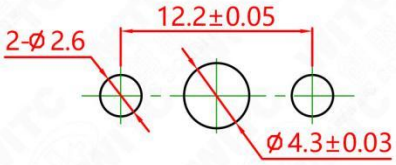

机械参数/Mechanical Data

中心连接方式/Center contact	插接/Captivated
外导体连接方式/Outer contact	法兰安装/Flange mounting
耐久性/Connector Durability	≥500
中心针保持力/Center contact captivation:	
轴向/Axial	≥ 27 N
径向/Radial	≥ 3 Ncm

材料/Material Data

零件/Piece Parts	材料/Material	镀层/Surface Plating
中心导体/Center contact	铍青铜/Beryllium bronze	镀金/Gold Plating (Nickel underplated)
外导体/Outer contact	不锈钢/Stainless steel	钝化/Passivated
绝缘体/Insulator	聚醚酰亚胺/PEI	

环境参数/Environmental Data

使用温度/Operating Temperature	-65℃ to 85℃
耐热温度/Temperature resistance	185℃

版本/REV.	1.0	投影方向/Direction of view		未注公差尺寸的极限偏差按IT17级

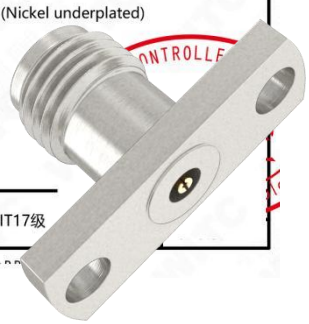

https://item.jd.com/10211149951312.html

WITC

产品型号/Type	产品编号/Part No.	适配电缆/Suitable cables	剥线尺寸/Cable shortening dimension
2.92-KFYDG2	21-1612-SAD2	玻珠/Glass bead	

RoHS

安装方式

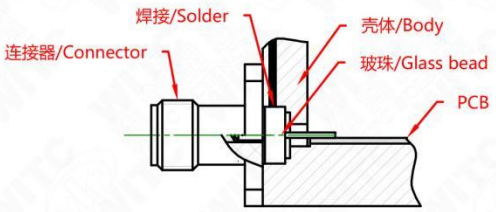

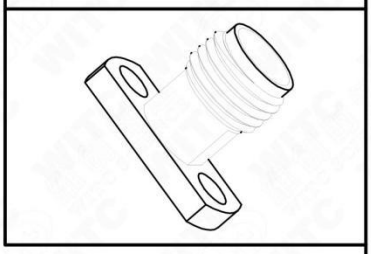

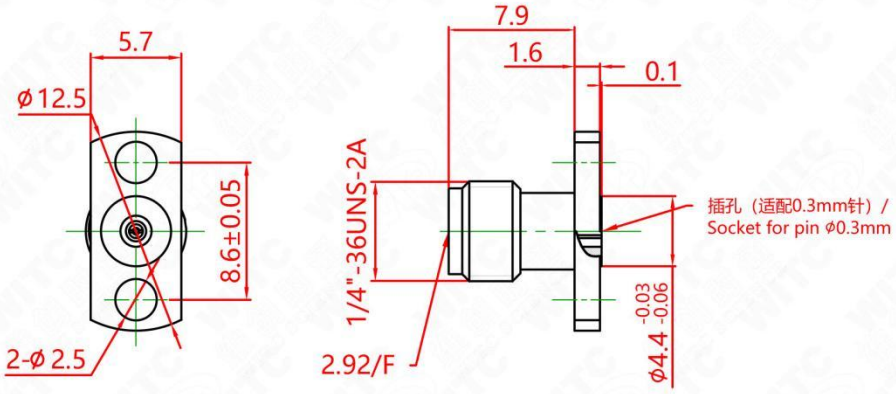

电气特性/Electrical Specifications

特性阻抗/Impedance	50Ω
频率范围/Frequency Range	DC-40GHz
驻波/VSWR	1.30(Max)
插损/Insertion loss	≤ 0.04 xSQT(f(GHz)) dB
中心导体接触电阻/Center contact resistance	≤ 3.0 mΩ
外导体接触电阻/Outer contact resistance	≤ 2.0 mΩ
测试电压/Test voltage	750 V rms

安装开孔尺寸

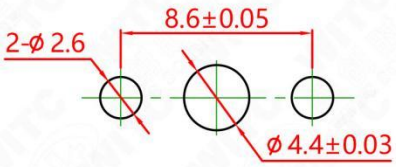

机械参数/Mechanical Data

中心连接方式/Center contact	插接/Captivated
外导体连接方式/Outer contact	法兰安装/Flange mounting
耐久性/Connector Durability	≥500
中心针保持力/Center contact captivation:	
轴向/Axial	≥ 27 N
径向/Radial	≥ 3 Ncm

材料/Material Data

零件/Piece Parts	材料/Material	镀层/Surface Plating
中心导体/Center contact	铍青铜/Beryllium bronze	镀金/Gold Plating (Nickel underplated)
外导体/Outer contact	不锈钢/Stainless steel	钝化/Passivated
绝缘体/Insulator	聚醚酰亚胺/PEI	

环境参数/Environmental Data

使用温度/Operating Temperature	-65℃ to 85℃
耐热温度/Temperature resistance	185℃

版本/REV.	1.0	投影方向/Direction of view		未注公差尺寸的极限偏差按IT17级

https://item.jd.com/10213779410480.html

WITC

产品型号/Type	产品编号/Part No.	适配电缆/Suitable cables	剥线尺寸/Cable shortening dimension
2.92-KFYDG3	21-1612-SAD3	玻珠/Glass bead	

RoHS

安装方式

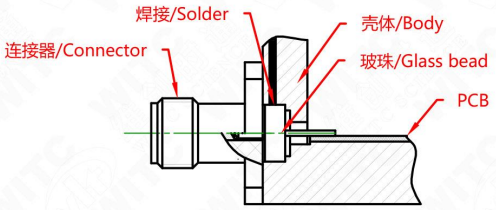

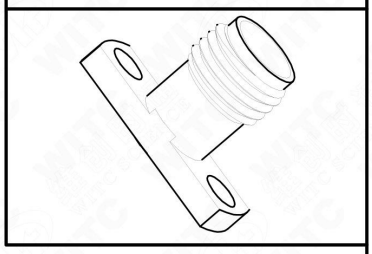

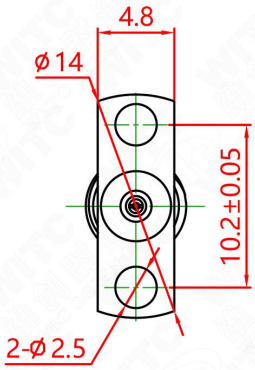

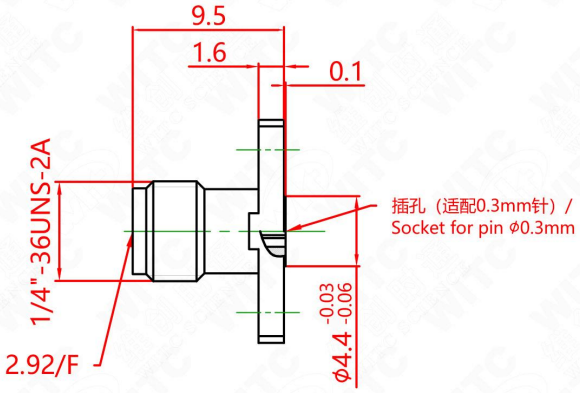

电气特性/Electrical Specifications

特性阻抗/Impedance	50Ω
频率范围/Frequency Range	DC-40GHz
驻波/VSWR	1.30(Max)
插损/Insertion loss	≤ 0.04 xSQT(f(GHz)) dB
中心导体接触电阻/Center contact resistance	≤ 3.0 mΩ
外导体接触电阻/Outer contact resistance	≤ 2.0 mΩ
测试电压/Test voltage	750 V rms

安装开孔尺寸

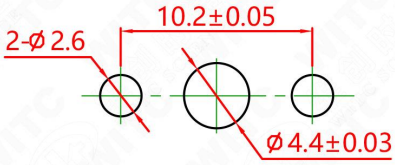

机械参数/Mechanical Data

中心连接方式/Center contact	插接/Captivated
外导体连接方式/Outer contact	法兰安装/Flange mounting
耐久性/Connector Durability	≥500
中心针保持力/Center contact captivation:	
轴向/Axial	≥ 27 N
径向/Radial	≥ 3 Ncm

材料/Material Data

零件/Piece Parts	材料/Material	镀层/Surface Plating
中心导体/Center contact	铍青铜/Beryllium bronze	镀金/Gold Plating (Nickel underplated)
外导体/Outer contact	不锈钢/Stainless steel	钝化/Passivated
绝缘体/Insulator	聚醚酰亚胺/PEI	

环境参数/Environmental Data

使用温度/Operating Temperature	-65℃ to 85℃
耐热温度/Temperature resistance	185℃

版本/REV.	1.0	投影方向/Direction of view		未注公差尺寸的极限偏差按IT17级

https://item.jd.com/10213778985290.html

WITC

产品型号/Type	产品编号/Part No.	适配电缆/Suitable cables	剥线尺寸/Cable shortening dimension
2.92-KFYDG4	21-1612-SAD4	玻珠/Glass bead	

RoHS

安装方式

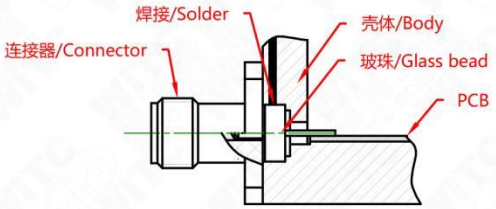

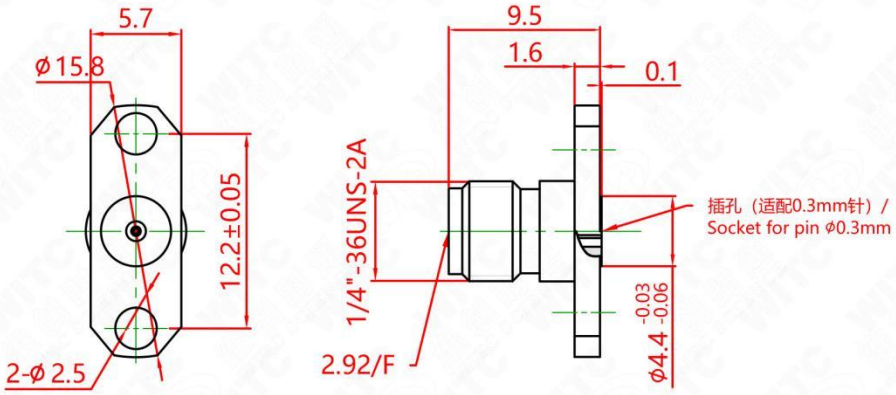

电气特性/Electrical Specifications

特性阻抗/Impedance	50Ω
频率范围/Frequency Range	DC-40GHz
驻波/VSWR	1.30(Max)
插损/Insertion loss	≤ 0.04 xSQT(f(GHz)) dB
中心导体接触电阻/Center contact resistance	≤ 3.0 mΩ
外导体接触电阻/Outer contact resistance	≤ 2.0 mΩ
测试电压/Test voltage	750 V rms

安装开孔尺寸

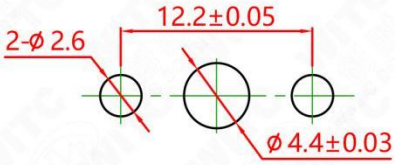

机械参数/Mechanical Data

中心连接方式/Center contact	插接/Captivated
外导体连接方式/Outer contact	法兰安装/Flange mounting
耐久性/Connector Durability	≥500
中心针保持力/Center contact captivation:	
轴向/Axial	≥ 27 N
径向/Radial	≥ 3 Ncm

材料/Material Data

零件/Piece Parts	材料/Material	镀层/Surface Plating
中心导体/Center contact	铍青铜/Beryllium bronze	镀金/Gold Plating (Nickel underplated)
外导体/Outer contact	不锈钢/Stainless steel	钝化/Passivated
绝缘体/Insulator	聚醚酰亚胺/PEI	

环境参数/Environmental Data

使用温度/Operating Temperature	-65℃ to 85℃
耐热温度/Temperature resistance	185℃

版本/REV.	1.0	投影方向/Direction of view		未注公差尺寸的极限偏差按IT17级

https://item.jd.com/10213779059393.html

WITC

产品型号/Type	产品编号/Part No.	适配电缆/Suitable cables	剥线尺寸/Cable shortening dimension
2.92-KZDG3	21-0114-SAD3	PCB	

RoHS

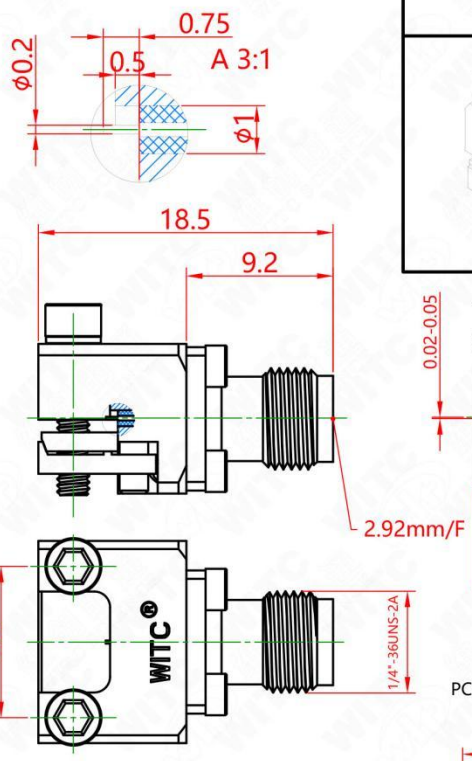

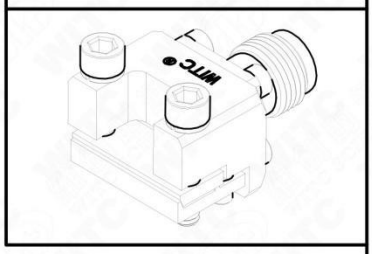

PCB 尺寸/ PCB LAYOUT(推荐)
(阴影区域为接触区)
Microstrip(微带线)

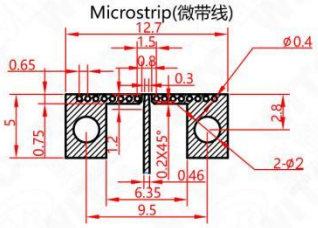

GCPW(接地共面波导)

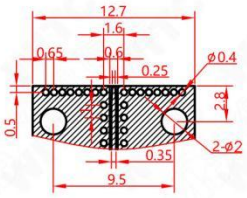

电气特性/Electrical Specifications

特性阻抗/Impedance	50Ω
频率范围/Frequency Range	DC-40GHz
驻波/VSWR	1.35(Max)
插损/Insertion loss	≤ 0.04 xSQT(f(GHz)) dB
中心导体接触电阻/Center contact resistance	≤ 3.0 mΩ
外导体接触电阻/Outer contact resistance	≤ 2.0 mΩ
测试电压/Test voltage	750 V rms

机械参数/Mechanical Data

中心连接方式/Center contact	免焊/No Soldered
外导体连接方式/Outer contact	机械夹紧/Mechanical clamping
耐久性/Connector Durability	≥500
中心针保持力/Center contact captivation:	
轴向/Axial	≥ 27 N
径向/Radial	≥ 3 Ncm
连接测试力矩/Coupling test torque	≤ 0.4 Nm
推荐力矩/Recommended torque	0.3Nm

材料/Material Data

零件/Piece Parts	材料/Material	镀层/Surface Plating
中心导体/Center contact	铍青铜/Beryllium bronze	镀金/Gold Plating (Nickel underplated)
外导体/Outer contact	不锈钢/Stainless steel	钝化/Passivated
螺钉/Screws	不锈钢/Stainless steel	
绝缘体/Insulator	聚四氟乙烯,聚醚酰亚胺/PTFE,PEI	

环境参数/Environmental Data

使用温度/Operating Temperature	-55℃ to 85℃

版本/REV.	1.0	投影方向/Direction of view		未注公差尺寸的极限偏差按IT

https://item.jd.com/10211150032880.html

WITC

产品型号/Type	产品编号/Part No.	适配电缆/Suitable cables	剥线尺寸/Cable shortening dimension
2.92-KZDG5	21-0114-SAD5	PCB	

RoHS

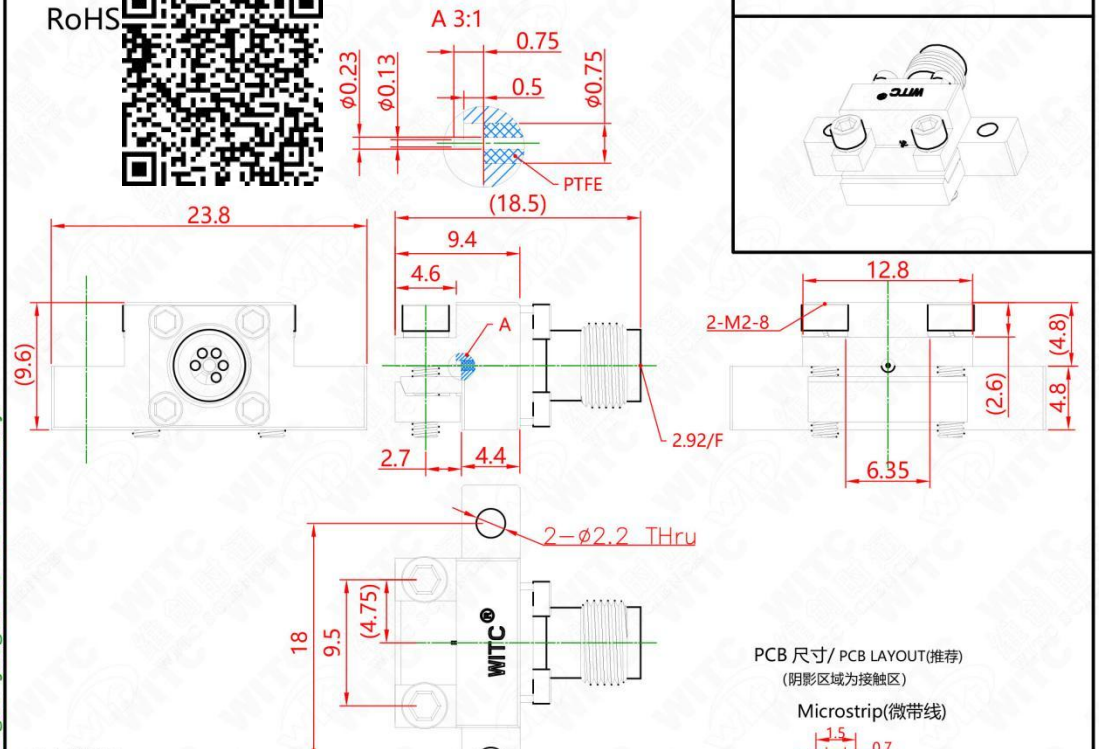

PCB 尺寸/ PCB LAYOUT(推荐)
(阴影区域为接触区)

Microstrip(微带线)

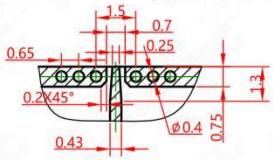

GCPW(接地共面波导)

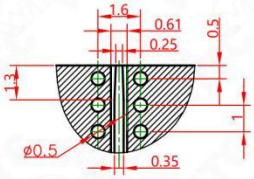

电气特性/Electrical Specifications

特性阻抗/Impedance	50Ω
频率范围/Frequency Range	DC-40GHz
驻波/VSWR	1.35(Max)
插损/Insertion loss	≤ 0.04 xSQRT(f(GHz)) dB
中心导体接触电阻/Center contact resistance	≤ 3.0 mΩ
外导体接触电阻/Outer contact resistance	≤ 2.0 mΩ
测试电压/Test voltage	750 V rms

机械参数/Mechanical Data

中心连接方式/Center contact	免焊/No Soldered
外导体连接方式/Outer contact	机械夹紧/Mechanical clamping
耐久性/Connector Durability	≥500
中心针保持力/Center contact captivation:	
轴向/Axial	≥ 27 N
径向/Radial	≥ 3 Ncm
连接测试力矩/Coupling test torque	≤ 0.4 Nm
推荐力矩/Recommended torque	0.3Nm

材料/Material Data

零件/Piece Parts	材料/Material	镀层/Surface Plating
中心导体/Center contact	铍青铜/Beryllium bronze	镀金/Gold Plating (Nickel underplated)
外导体/Outer contact	不锈钢/Stainless steel	钝化/Passivated
螺钉/Screws	不锈钢/Stainless steel	
绝缘体/Insulator	聚四氟乙烯,聚醚酰亚胺/PTFE,PEI	

环境参数/Environmental Data

使用温度/Operating Temperature	-55℃ to 85℃

版本/REV.	1.0	投影方向/Direction of view		未注公差尺寸的极限偏差按IT15级

https://item.jd.com/10213777995156.html

WITC

产品型号/Type	产品编号/Part No.	适配电缆/Suitable cables	剥线尺寸/Cable shortening dimension
2.92-KZDG7	21-0114-SAD7	PCB	

RoHS

建议PCB板厚度2.0mm（Max）

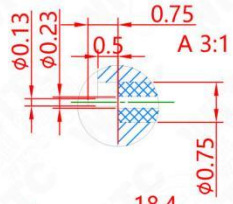

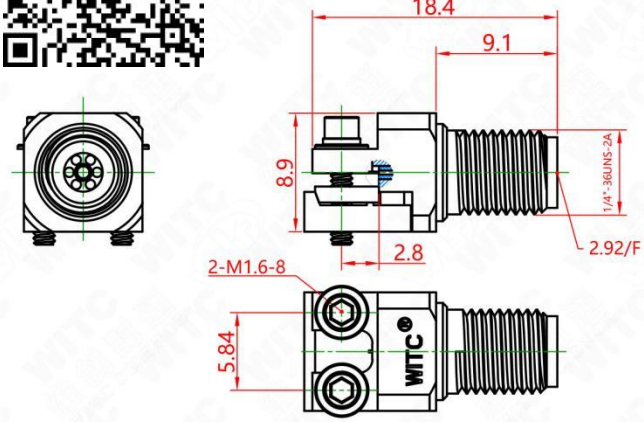

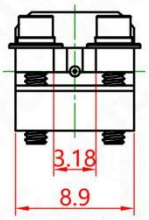

PCB 尺寸/ PCB LAYOUT(推荐)
（阴影区域为接触区）

Microstrip(微带线)

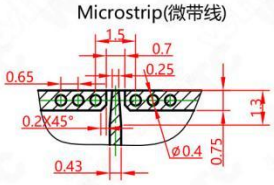

GCPW(接地共面波导)

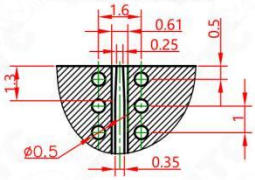

电气特性/Electrical Specifications

特性阻抗/Impedance	50Ω
频率范围/Frequency Range	DC-40GHz
驻波/VSWR	1.35(Max)
插损/Insertion loss	≤ 0.04 xSQT(f(GHz)) dB
中心导体接触电阻/Center contact resistance	≤ 3.0 mΩ
外导体接触电阻/Outer contact resistance	≤ 2.0 mΩ
测试电压/Test voltage	750 V rms

机械参数/Mechanical Data

中心连接方式/Center contact	免焊/No Soldered
外导体连接方式/Outer contact	机械夹紧/Mechanical clamping
耐久性/Connector Durability	≥500
中心针保持力/Center contact captivation:	
轴向/Axial	≥ 27 N
径向/Radial	≥ 3 Ncm
连接测试力矩/Coupling test torque	≤ 0.4 Nm
推荐力矩/Recommended torque	0.3Nm

材料/Material Data

零件/Piece Parts	材料/Material	镀层/Surface Plating
中心导体/Center contact	铍青铜/Beryllium bronze	镀金/Gold Plating (Nickel underplated)
外导体/Outer contact	不锈钢/Stainless steel	钝化/Passivated
螺钉/Screws	不锈钢/Stainless steel	
绝缘体/Insulator	聚四氟乙烯,聚醚酰亚胺/PTFE,PEI	

环境参数/Environmental Data

使用温度/Operating Temperature	-55℃ to 85℃

版本/REV.	1.0	投影方向/Direction of view		未注公差尺寸的极限偏差按IT1

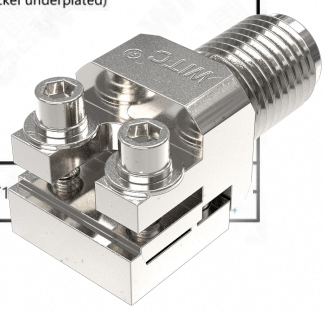

https://item.jd.com/10213778243076.html

WITC

产品型号/Type	产品编号/Part No.	端接形式/Backend Type	产品特性/Features
2.92-KZDG1	21-0114-NAD1	PCB Board SMD	Right Angle Jack PCB Frequency up to 40GHz

RoHS

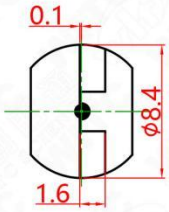

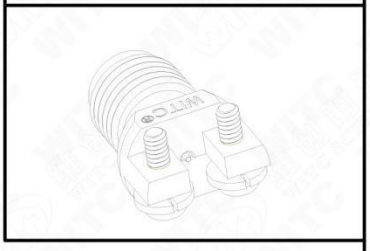

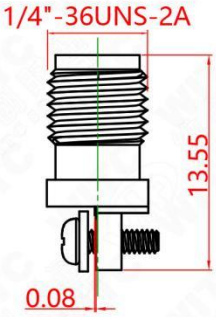

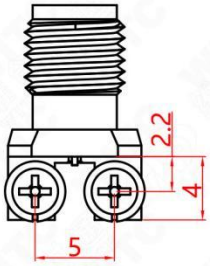

推荐焊盘尺寸(Pcb -Layout)
(此版图尺寸基于0.254mm板厚给出，仅供参考；应视实际所用板材的参数、厚度、叠层关系以及结构等，进行连接器与PCB板之间传输性能的分析设计以确定合适的尺寸以及连接方式)

MOUNTING/SIGNAL LAYER

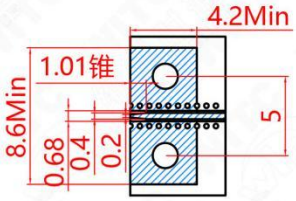

GND LAYERS

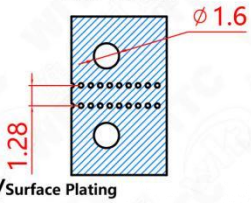

电气特性/Electrical Specifications

特性阻抗/Impedance	50Ω
连接器频率/ Connector Frequency Range	DC-40GHz
回波损耗/Return loss *	≥20 dB(DC-6GHz) ≥18 dB(6-20GHz) ≥16 dB(20-40GHz)

*(Return Loss in application depends decisive on PCB layout)

插损/Insertion loss	≤ 0.05 xSQRT(f(GHz)) dB
中心导体接触电阻/Center contact resistance	≤ 3.0 mΩ
外导体接触电阻/Outer contact resistance	≤ 2.0 mΩ
测试电压/Test voltage	500 V rms

机械参数/Mechanical Data

中心连接方式/Center contact	免焊/No Soldered
外导体连接方式/Outer contact	机械夹紧/Mechanical clamping
耐久性/Connector Durability	≥500
连接测试力矩/Coupling test torque	1.7 Nm
推荐力矩/Recommended torque	0.8Nm~1.1 Nm

材料/Material Data

零件/Piece Parts	材料/Material	镀层/Surface Plating
中心导体/Center contact	铍青铜/Beryllium bronze	镀金/Gold Plating (Nickel underplated)
外导体/Outer contact	黄铜/Brass	镀镍/Nickel Plating
绝缘体/Insulator	聚醚醚酮/PEEK	

环境参数/Environmental Data

使用温度/Operating Temperature	-55℃ to 165℃

版本/REV.	1.0	投影方向/Direction of view		未注公差尺寸的极限偏差按IT15级

https://item.jd.com/10213778243942.html

WITC

产品型号/Type	产品编号/Part No.	端接形式/Backend Type	产品特性/Features
2.92-KHD1	21-0108-AAD1	PCB Board SMD	Right Angle Jack PCB Connector Frequency up to 40GHz

RoHS

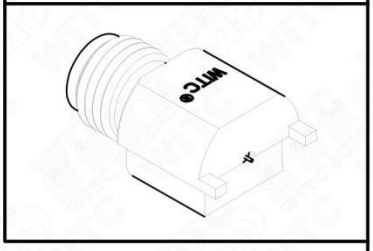

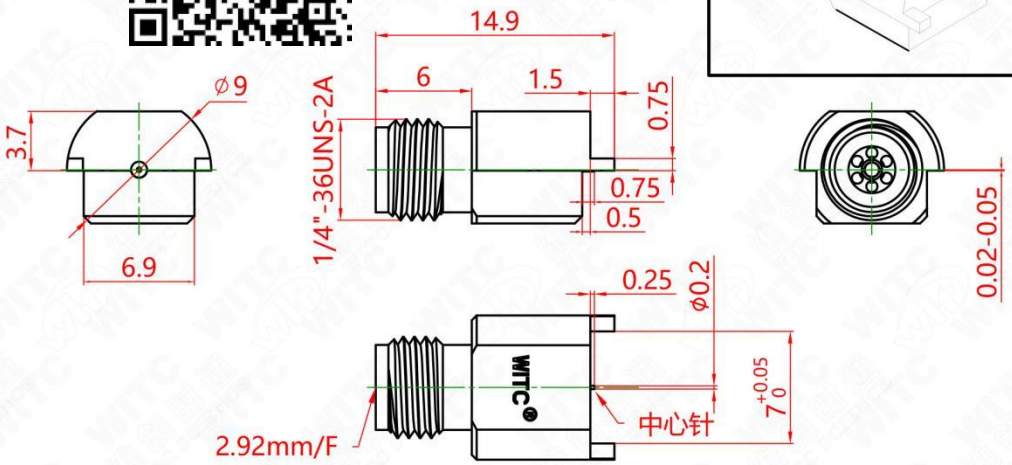

推荐焊盘尺寸(Pcb -Layout)
(阴影区域为接触区)
(此版图基于0.203mm板厚给出，仅供参考；应视实际所用板材的参数、厚度、叠层关系以及结构等，进行连接器与PCB板之间的传输性能的分析设计，以确定合适的尺寸，以及连接方式)

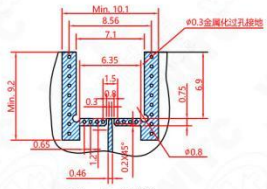

Microstrip(微带线)

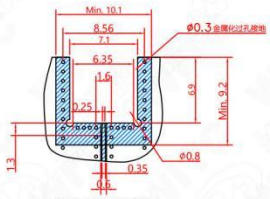

GCPW(接地共面波导)

电气特性/Electrical Specifications

特性阻抗/Impedance	50Ω
连接器频率/ Connector Frequency Range	DC-40GHz
回波损耗/Return Loss *	≥14dB@ DC~40GHz
*(Return Loss in application depends decisive on PCB layout)	
插损/Insertion loss	≤ 0.05 xSQRT(f(GHz)) dB
中心导体接触电阻/Center contact resistance	≤ 3.0 mΩ
外导体接触电阻/Outer contact resistance	≤ 2.0 mΩ
测试电压/Test voltage	500 V rms

机械参数/Mechanical Data

中心连接方式/Center contact	焊接/Soldered
外导体连接方式/Outer contact	焊接/Soldered
耐久性/Connector Durability	≥500
连接测试力矩/Coupling test torque	1.7 Nm
推荐力矩/Recommended torque	0.8Nm~1.1 Nm

材料/Material Data

零件/Piece Parts	材料/Material	镀层/Surface Plating
中心导体/Center contact	铍青铜/Beryllium bronze	镀金/Gold Plating (Nickel underplated)
外导体/Outer contact	黄铜/Brass	镀金/Gold Plating (Nickel underplated)
绝缘体/Insulator	聚醚醚酮/PEEK & 聚四氟乙烯/PTFE	

环境参数/Environmental Data

使用温度/Operating Temperature	-55℃ to 155℃
最大焊接温度/ Max.soldering Temperature	230℃ for 6 sec

版本/REV.	3.0	投影方向/Direction of view		未注公差尺寸的极限偏差按

https://item.jd.com/10213495898054.html

WITC

产品型号/Type	产品编号/Part No.	适配连接/Adaptive connection	剥线尺寸/Cable shortening dimension
2.92-KHD2	21-0108-AAD2	PCB	

RoHS

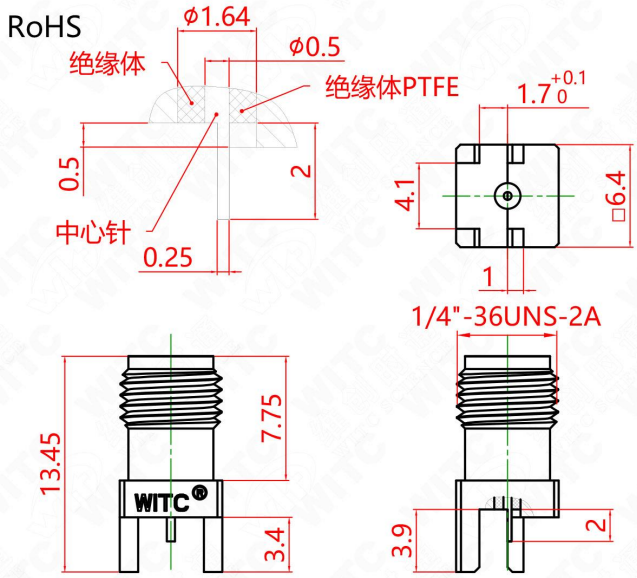

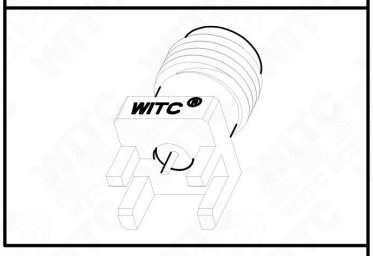

电气特性/Electrical Specifications

特性阻抗/Impedance	50Ω
频率范围/Frequency Range	DC-40GHz
回波损耗/Return Loss	≥16 dB @DC~26.5 GHz
	≥12.7 dB @26.5~40 GHz
插损/Insertion loss	≤ 0.05 xSQRT(f(GHz)) dB
中心导体接触电阻/Center contact resistance	≤ 3.0 mΩ
外导体接触电阻/Outer contact resistance	≤ 2.0 mΩ
测试电压/Test voltage	750 V rms

推荐焊盘尺寸(Pcb -Layout)

(此版图尺寸基于0.508mm板厚给出，仅供参考;应视实际所用板材的参数、厚度、叠层关系以及结构等，进行连接器与PCB板之间传输性能的分析设计以确定合适的尺寸以及连接方式；连接器适用的叠板厚度应小于1.7mm)

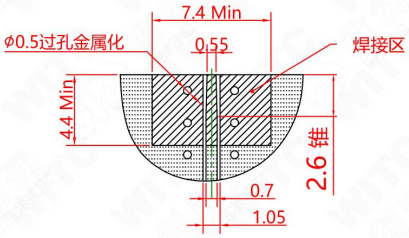

GCPW(接地共面波导)

机械参数/Mechanical Data

中心连接方式/Center contact	焊接/Soldered
中心连接方式/Center contact	焊接/Soldered
耐久性/Connector Durability	≥500
中心针保持力/Center contact captivation:	
轴向/Axial	≥ 27 N
径向/Radial	≥ 3 Ncm

材料/Material Data

零件/Piece Parts	材料/Material	镀层/Surface Plating
中心导体/Center contact	铍青铜/Beryllium bronze	镀金/Gold Plating (Nickel underplated)
外导体/Outer contact	黄铜/Brass	镀金/Gold Plating (Nickel underplated)
绝缘体/Insulator	聚醚酰亚胺/PEI & 聚四氟乙烯/PTFE	

环境参数/Environmental Data

使用温度/Operating Temperature	-65℃ to 165℃
耐热温度/Temperature resistance	185℃

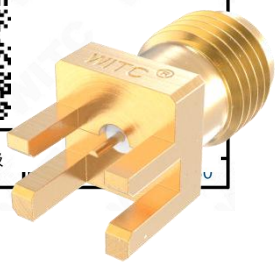

版本/REV.	1.0	投影方向/Direction of view		未注公差尺寸的极限偏差按IT15级

https://item.jd.com/10213496690335.html

WITC

产品型号/Type	产品编号/Part No.	端接形式/Backend Type	产品特性/Features
2.92-KHD6	21-0108-AAD6	PCB Board SMD	Right Angle Jack PCB Connector Frequency up to 40GHz

RoHS

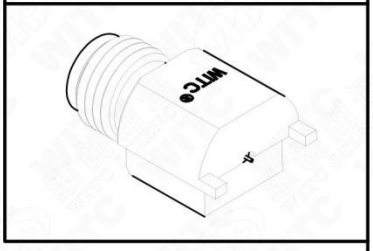

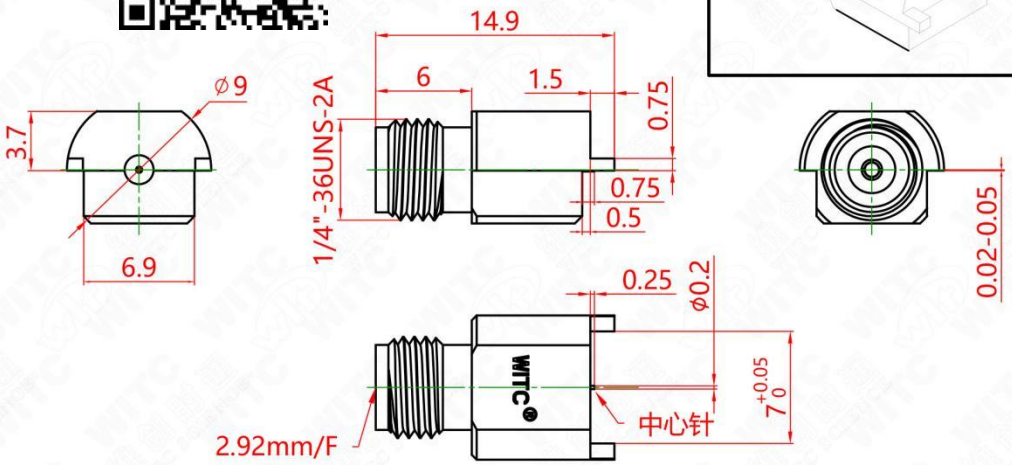

推荐焊盘尺寸(Pcb -Layout)
(阴影区域为接触区)
(此版图基于0.203mm板厚给出，仅供参考；应视实际所用板材的参数、厚度、叠层关系以及结构等，进行连接器与PCB板之间的传输性能的分析设计，以确定合适的尺寸，以及连接方式)

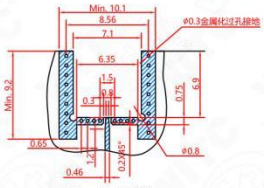

Microstrip(微带线)

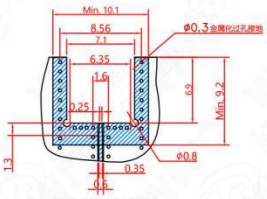

GCPW(接地共面波导)

电气特性/Electrical Specifications

特性阻抗/Impedance	50Ω
连接器频率/ Connector Frequency Range	DC-40GHz
回波损耗/Return Loss *	≥12.7dB@ DC~40GHz
*(Return Loss in application depends decisive on PCB layout)	
插损/Insertion loss	≤ 0.05 xSQRT(f(GHz)) dB
中心导体接触电阻/Center contact resistance	≤ 3.0 mΩ
外导体接触电阻/Outer contact resistance	≤ 2.0 mΩ
测试电压/Test voltage	500 V rms

机械参数/Mechanical Data

中心连接方式/Center contact	焊接/Soldered
外导体连接方式/Outer contact	焊接/Soldered
耐久性/Connector Durability	≥500
连接测试力矩/Coupling test torque	1.7 Nm
推荐力矩/Recommended torque	0.8Nm~1.1 Nm

材料/Material Data

零件/Piece Parts	材料/Material	镀层/Surface Plating
中心导体/Center contact	铍青铜/Beryllium bronze	镀金/Gold Plating (Nickel underplated)
外导体/Outer contact	黄铜/Brass	镀金/Gold Plating (Nickel underplated)
绝缘体/Insulator	聚醚醚酮/PEEK	

环境参数/Environmental Data

使用温度/Operating Temperature	-55℃ to 155℃
最大焊接温度/ Max.soldering Temperature	260℃ for 6 sec

版本/REV.	3.0	投影方向/Direction of view		未注公差尺寸的极

https://item.jd.com/10211119132895.html

WITC

产品型号/Type	产品编号/Part No.	适配电缆/Suitable cables	剥线尺寸/Cable shortening dimension
2.92-KFYDG2	21-1412-SAD1	插针/Pin ϕ0.5mm	

RoHS

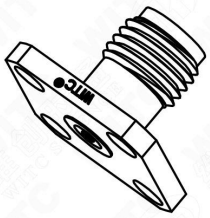

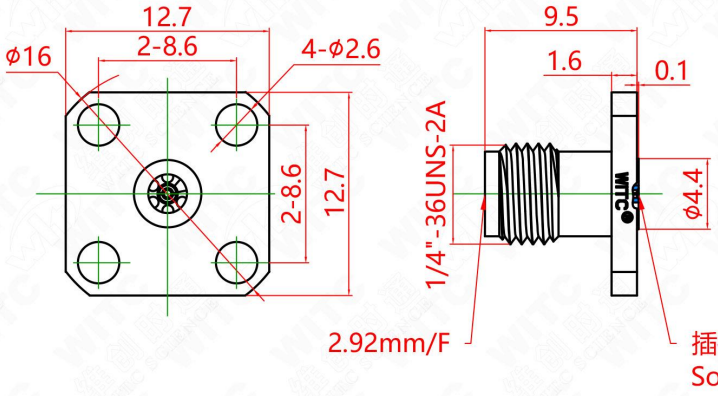

电气特性/Electrical Specifications

特性阻抗/Impedance	50Ω
频率范围/Frequency Range	DC-40GHz
驻波/VSWR	1.35(Max)
插损/Insertion loss	≤ 0.05 xSQRT(f(GHz)) dB
中心导体接触电阻/Center contact resistance	≤ 3.0 mΩ
外导体接触电阻/Outer contact resistance	≤ 2.5 mΩ
测试电压/Test voltage	750 V rms

安装开孔尺寸
（参考）

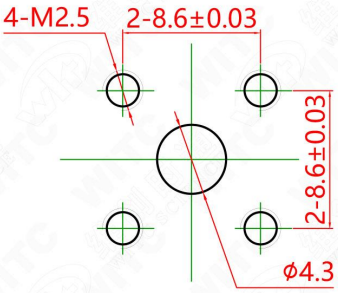

机械参数/Mechanical Data

中心连接方式/Center contact	插接/Captivated
外导体连接方式/Outer contact	法兰安装/Flange mounting
耐久性/Connector Durability	≥500
中心针保持力/Center contact captivation	
轴向/Axial	≥ 27 N
径向/Radial	≥ 3 Ncm

材料/Material Data

零件/Piece Parts	材料/Material	镀层/Surface Plating
中心导体/Center contact	铍青铜/Beryllium bronze	镀金/Gold Plating (Nickel underplated)
外导体/Outer contact	不锈钢/Stainless steel	钝化/Passivated
绝缘体/Insulator	聚醚酰亚胺/PEI	

环境参数/Environmental Data

使用温度/Operating Temperature	-65℃ to 85℃
耐热温度/Temperature resistance	185℃

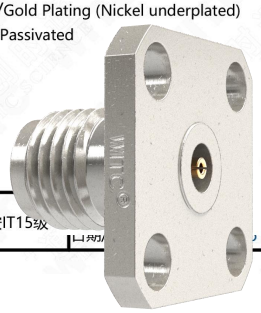

版本/REV.	1.0	投影方向/Direction of view		未注公差尺寸的极限偏差按IT15级

https://item.jd.com/10211119343956.html

WITC

产品型号/Type	产品编号/Part No.	适配电缆/Suitable cables	剥线尺寸/Cable shortening dimension
2.92-KYDG1	21-0112-SAD1	玻珠/Glass bead	

RoHS

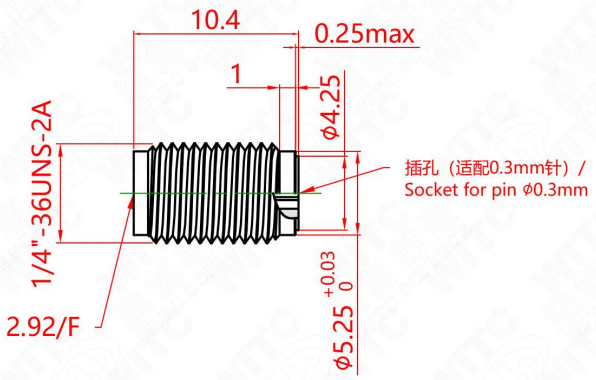

安装开孔尺寸

1/4"-36UNS-2B

电气特性/Electrical Specifications

特性阻抗/Impedance	50Ω
频率范围/Frequency Range	DC-40GHz
驻波/VSWR	1.30(Max)
插损/Insertion loss	≤ 0.04 xSQT(f(GHz)) dB
中心导体接触电阻/Center contact resistance	≤ 3.0 mΩ
外导体接触电阻/Outer contact resistance	≤ 2.0 mΩ
测试电压/Test voltage	750 V rms

机械参数/Mechanical Data

中心连接方式/Center contact	插接/Captivated
外导体连接方式/Outer contact	法兰安装/Flange mounting
耐久性/Connector Durability	≥500
中心针保持力/Center contact captivation:	
轴向/Axial	≥ 27 N
径向/Radial	≥ 3 Ncm

材料/Material Data

零件/Piece Parts	材料/Material	镀层/Surface Plating
中心导体/Center contact	铍青铜/Beryllium bronze	镀金/Gold Plating (Nickel underplated)
外导体/Outer contact	不锈钢/Stainless steel	钝化/Passivated
绝缘体/Insulator	聚醚酰亚胺/PEI	

环境参数/Environmental Data

使用温度/Operating Temperature	-65℃ to 85℃
耐热温度/Temperature resistance	185℃

版本/REV.	1.0	投影方向/Direction of view		未注公差尺寸的极限偏差按IT17级

https://item.jd.com/10211150564215.html

WITC

产品型号/Type	产品编号/Part No.	端接形式/Backend Type	产品特性/Features
2.92-KPDG1	21-010P-SAD1	PC-Board	2.92 Jack Connector Frequency up to 40GHz

RoHS

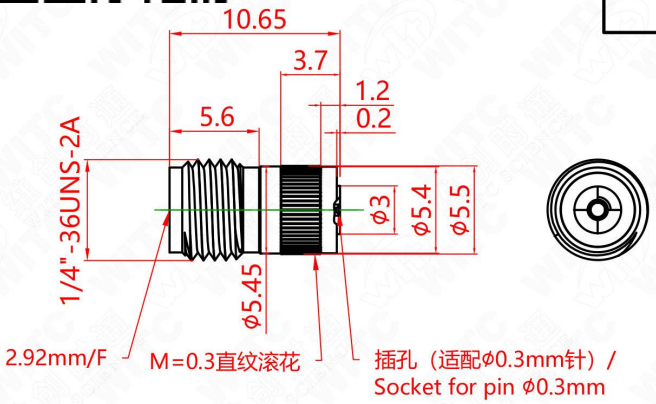

电气特性/Electrical Specifications

特性阻抗/Impedance	50Ω
频率范围/Frequency Range	DC-40GHz
驻波/VSWR	1.4(Max)
*(Return Loss in application depends decisive on PCB layout)	
插损/Insertion loss	≤ 0.04 xSQRT(f(GHz)) dB
中心导体接触电阻/Center contact resistance	≤ 3.0 mΩ
外导体接触电阻/Outer contact resistance	≤ 2.0 mΩ
测试电压/Test voltage	750 V rms

安装孔尺寸

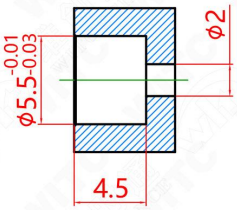

机械参数/Mechanical Data

中心连接方式/Center contact	插接/Captivated
外导体连接方式/Outer contact	压入式/Press in
耐久性/Connector Durability	≥500
连接测试力矩/Coupling test torque	1.7 Nm
推荐力矩/Recommended torque	0.8Nm~1.1 Nm

材料/Material Data

零件/Piece Parts	材料/Material	镀层/Surface Plating
中心导体/Center contact	铍青铜/Beryllium bronze	镀金/Gold Plating (Nickel underplated)
外导体/Outer contact	不锈钢/Stainless steel	钝化/Passivated
绝缘体/Insulator	聚醚醚酮/PEEK	

环境参数/Environmental Data

使用温度/Operating Temperature	-65℃ to 165℃

版本/REV.	1.0	投影方向/Direction of view		未注公差尺寸的极限偏差按

https://item.jd.com/10213777236110.htm

WITC

产品型号/Type	产品编号/Part No.	端接形式/Backend Type	产品特性/Features
2.92-KPD1	21-010P-AAD1	PC-Board	2.92 Jack Connector Frequency up to 40GHz

RoHS

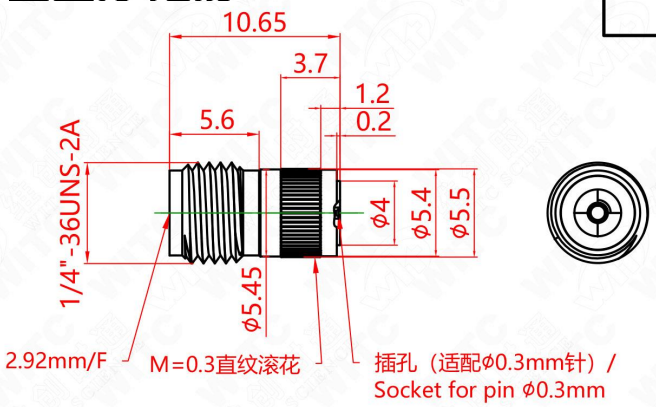

电气特性/Electrical Specifications

特性阻抗/Impedance	50Ω
频率范围/Frequency Range	DC-40GHz
驻波/VSWR	1.4(Max)
*(Return Loss in application depends decisive on PCB layout)	
插损/Insertion loss	≤ 0.04 xSQRT(f(GHz)) dB
中心导体接触电阻/Center contact resistance	≤ 3.0 mΩ
外导体接触电阻/Outer contact resistance	≤ 2.0 mΩ
测试电压/Test voltage	750 V rms

安装孔尺寸

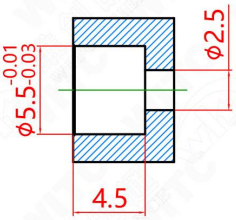

机械参数/Mechanical Data

中心连接方式/Center contact	插接/Captivated
外导体连接方式/Outer contact	压入式/Press in
耐久性/Connector Durability	≥500
连接测试力矩/Coupling test torque	1.7 Nm
推荐力矩/Recommended torque	0.8Nm~1.1 Nm

材料/Material Data

零件/Piece Parts	材料/Material	镀层/Surface Plating
中心导体/Center contact	铍青铜/Beryllium bronze	镀金/Gold Plating (Nickel underplated)
外导体/Outer contact	黄铜/Brass	镀金/Gold Plating (Nickel underplated)
绝缘体/Insulator	聚醚醚酮/PEEK	

环境参数/Environmental Data

使用温度/Operating Temperature	-65℃ to 165℃

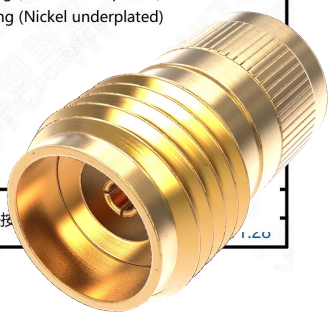

版本/REV.	1.0	投影方向/Direction of view		未注公差尺寸的极限偏差按

https://item.jd.com/10211150288537.html