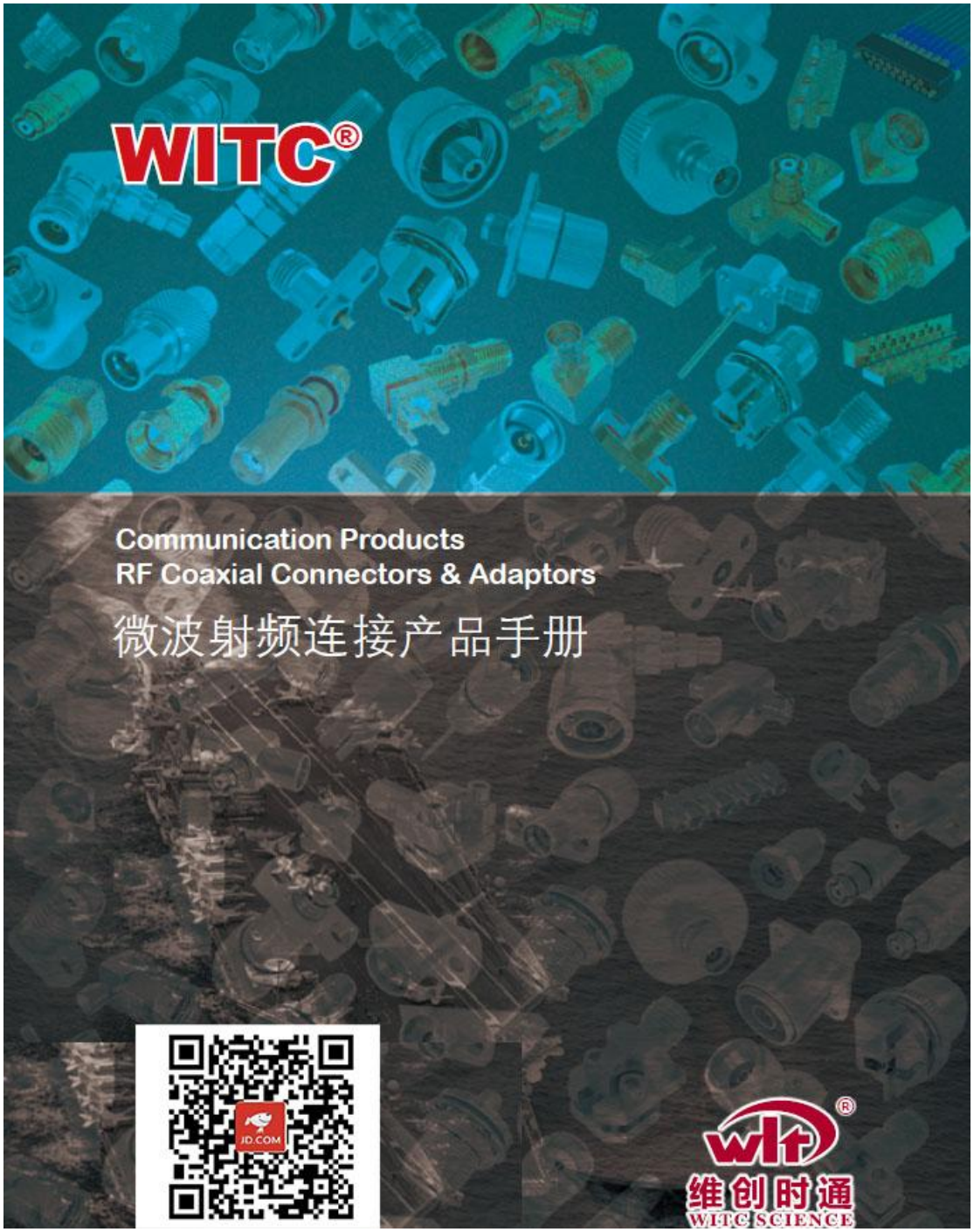

1.85mm 系列内同轴转接器适配器：母头转母头，母头转公头，公头转公头，公头转母头

WITC

产品型号/Type	产品编号/Part No.	转接器/Adaptor
1.85-JJG1	180180-01-SA1	

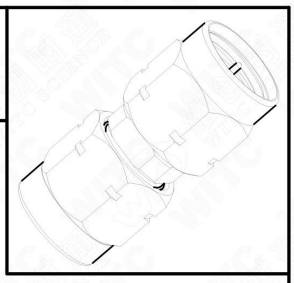

RoHS

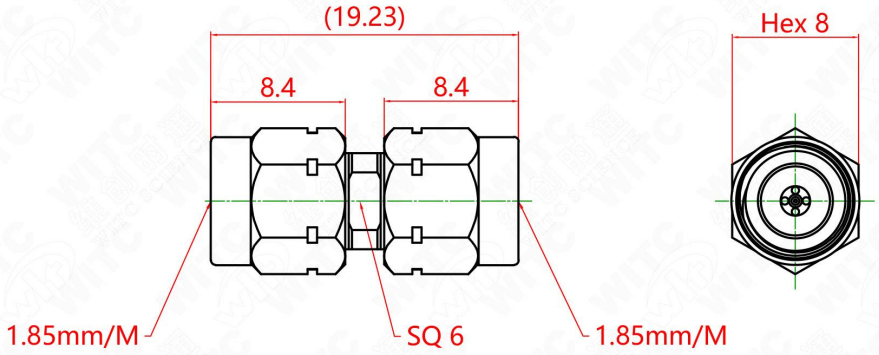

电气特性/Electrical Specifications

特性阻抗/Impedance	50Ω
频率范围/Frequency Range	DC-67GHz
驻波/VSWR	1.35(Max)
插损/Insertion loss	≤ 0.05 x SQRT(f(GHz))dB
中心体接触电阻 /Center contact resistance	≤ 4.0 mΩ
外导体接触电阻 /Outer contact resistance	≤ 2.5 mΩ
测试电压/Test voltage	500 V rms

机械参数/Mechanical Data

耐久性/Connector Durability	≥500
连接测试力矩 /Coupling test torque	1.65 Nm
推荐力矩 /Recommended torque	0.8Nm~1.1 Nm

材料/Material Data

零件/Piece Parts	材料/Material	镀层/Surface Plating
中心导体/Center contact	铍青铜/Beryllium bronze	镀金/Gold Plating (Nickel underplated)
外导体/Outer contact	不锈钢/Stainless steel	钝化/Passivated
连接螺帽/Coupling nut	不锈钢/Stainless steel	钝化/Passivated
绝缘体/Insulator	聚醚酰亚胺/PEI	

环境参数/Environmental Data

使用温度/Operating Temperature	-40℃ to 85℃
耐热温度/Temperature resistance	185℃

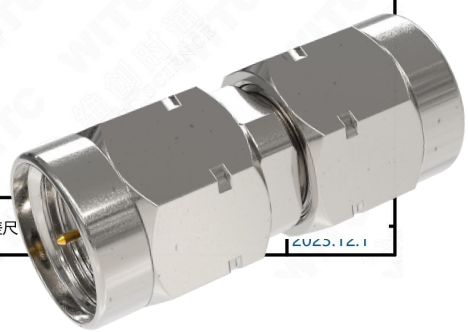

版本/REV.	2.0	投影方向/Direction of view		未注公差尺	2023.12.1

https://item.jd.com/10207440166018.html

WITC

产品型号/Type	产品编号/Part No.	转接器/Adaptor
1.85-JKG1	180181-01-SA1	

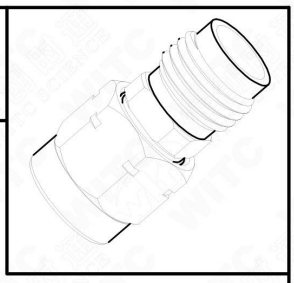

RoHS

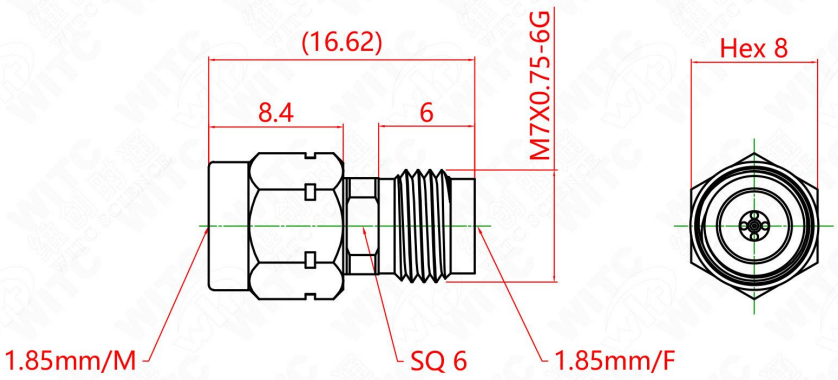

电气特性/Electrical Specifications

特性阻抗/Impedance	50Ω
频率范围/Frequency Range	DC-67GHz
驻波/VSWR	1.35(Max)
插损/Insertion loss	≤ 0.05 x SQRT(f(GHz))dB
中心体接触电阻 /Center contact resistance	≤ 4.0 mΩ
外导体接触电阻 /Outer contact resistance	≤ 2.5 mΩ
测试电压/Test voltage	500 V rms

机械参数/Mechanical Data

耐久性/Connector Durability	≥500
连接测试力矩 /Coupling test torque	1.65 Nm
推荐力矩 /Recommended torque	0.8Nm~1.1 Nm

材料/Material Data

零件/Piece Parts	材料/Material	镀层/Surface Plating
中心导体/Center contact	铍青铜/Beryllium bronze	镀金/Gold Plating (Nickel underplated)
外导体/Outer contact	不锈钢/Stainless steel	钝化/Passivated
连接螺帽/Coupling nut	不锈钢/Stainless steel	钝化/Passivated
绝缘体/Insulator	聚醚酰亚胺/PEI	

环境参数/Environmental Data

使用温度/Operating Temperature	-40℃ to 85℃
耐热温度/Temperature resistance	185℃

版本/REV.	2.0	投影方向/Direction of view		未注公差

https://item.jd.com/10207440692942.html

WITC

产品型号/Type	产品编号/Part No.	转接器/Adaptor
1.85-KKG1	181181-01-SA1	

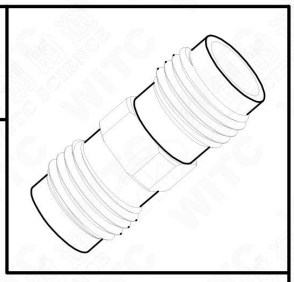

RoHS

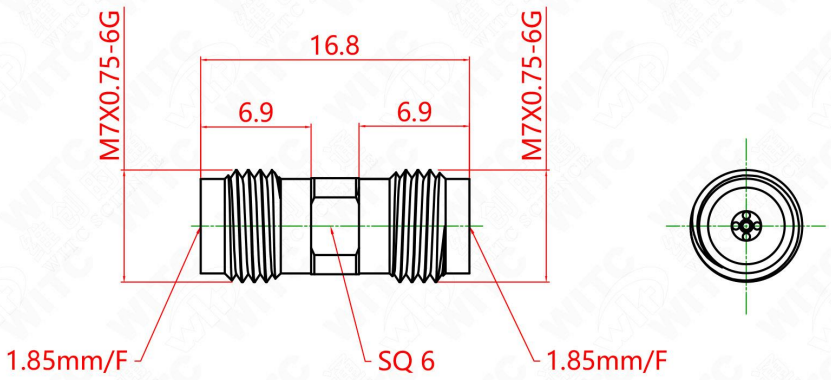

电气特性/Electrical Specifications

特性阻抗/Impedance	50Ω
频率范围/Frequency Range	DC-67GHz
驻波/VSWR	1.35(Max)
插损/Insertion loss	≤ 0.05 x SQRT(f(GHz))dB
中心体接触电阻 /Center contact resistance	≤ 4.0 mΩ
外导体接触电阻 /Outer contact resistance	≤ 2.5 mΩ
测试电压/Test voltage	500 V rms

机械参数/Mechanical Data

耐久性/Connector Durability	≥500
连接测试力矩 /Coupling test torque	1.65 Nm
推荐力矩 /Recommended torque	0.8Nm~1.1 Nm

材料/Material Data

零件/Piece Parts	材料/Material	镀层/Surface Plating
中心导体/Center contact	铍青铜/Beryllium bronze	镀金/Gold Plating (Nickel underplated)
外导体/Outer contact	不锈钢/Stainless steel	钝化/Passivated
绝缘体/Insulator	聚醚酰亚胺/PEI	

环境参数/Environmental Data

使用温度/Operating Temperature	-40℃ to 85℃
耐热温度/Temperature resistance	185℃

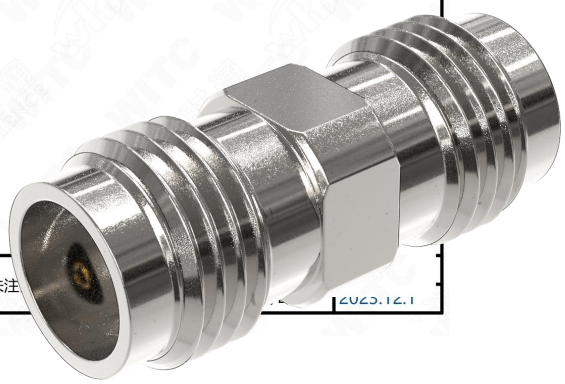

版本/REV.	2.0	投影方向/Direction of view		未注	2023.12.1

https://item.jd.com/10207441388605.html

WITC

产品型号/Type	产品编号/Part No.	转接器/Adapter
1.85-JFKG1	180181-14-SA1	

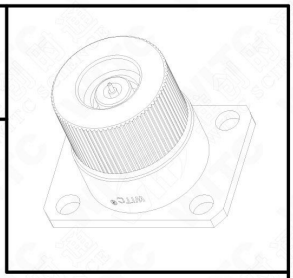

RoHS

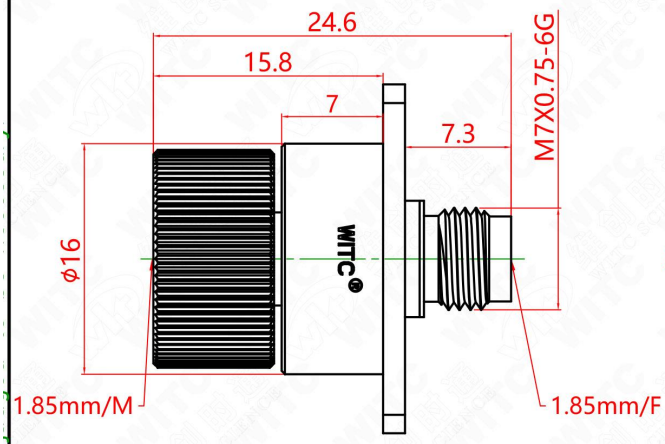

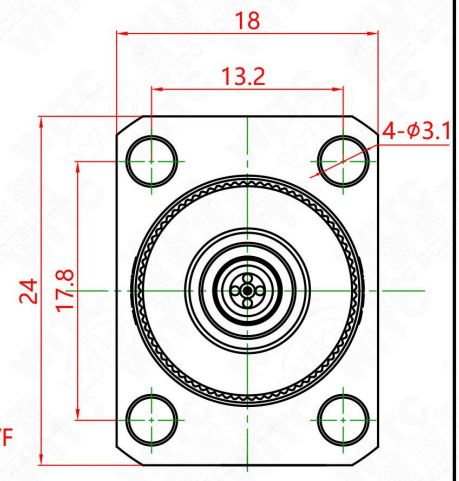

安装尺寸

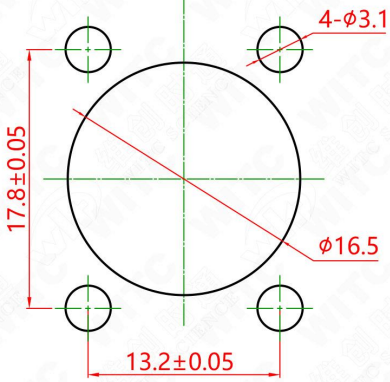

电气特性/Electrical Specifications

特性阻抗/Impedance	50Ω
频率范围/Frequency Range	DC-67GHz
驻波/VSWR	≤1.30
插损/Insertion loss	≤ 0.05 x SQRT(f(GHz))dB
中心体接触电阻 /Center contact resistance	≤ 4.0 mΩ
外导体接触电阻 /Outer contact resistance	≤ 2.5 mΩ
介质耐压 /Dielectric Withstanding Voltage	≥500 V rms(sea leveal)

机械参数/Mechanical Data

耐久性/Connector Durability	≥500
连接测试力矩 /Coupling test torque	1.65 Nm
推荐力矩 /Recommended torque	0.8Nm~1.1 Nm

材料/Material Data

零件/Piece Parts	材料/Material	镀层/Surface Plating
中心导体/Center contact	铍青铜/Beryllium bronze	镀金/Gold Plating (Nickel underplated)
外导体/Outer contact	不锈钢/Stainless steel	钝化/Passivated
连接螺帽/Coupling nut	不锈钢/Stainless steel	钝化/Passivated
绝缘体/Insulator	聚醚酰亚胺/PEI	

环境参数/Environmental Data

使用温度/Operating Temperature	-65℃ to 165℃

版本/REV.	1.0	投影方向/Direction of view		未注公差尺寸的极限偏差按

https://item.jd.com/10207441301094.html