UNIPOLE & MULTIPOLE CONNECTORS

LEMO®

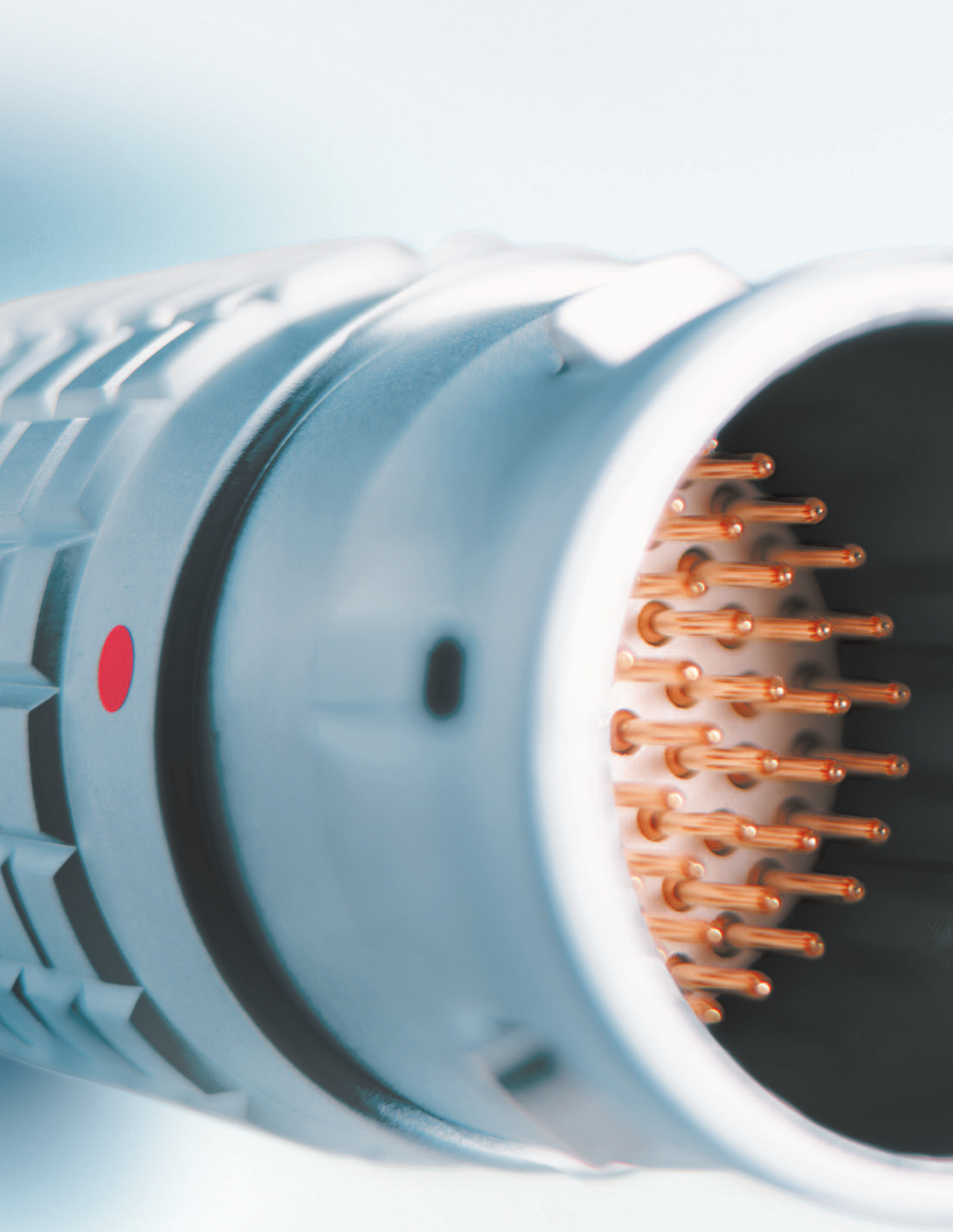

No reproduction or use without express permission of editorial or pictorial content, in any manner.
LEMO reserve the right at all times to modify and improve specifications without any notification.

LEMO unipole and multipole connectors

This catalogue gives the complete description of LEMO unipole and multipole type connectors. The LEMO manufacturing programme has been extended to almost 40 series divided into 7 product families with specific mating and environmental characteristics. Each series includes a wide variety of plug, socket, coupler and bridge plug models, available in contact configurations adapted to all round cables, including up to 114 conductors, and a maximum diameter of 30 mm. Watertight and vacuumtight models are also available. Since LEMO connectors are perfectly screened and designed to guarantee very low resistance to shell electrical continuity, they are particularly adapted to applications where electromagnetic compatibility (EMC) is important.

Table of Contents

3 steps to select the right connector ... 3

B Series (indoor, keyed)
- Interconnections ... 12
- Part Numbering system ... 13
- Metal Housing models ... 14
- Elbow socket models ... 25
- Plastic housing models ... 28
- Watertight or vacuumtight models ... 30
- Bridge models ... 34
- Threaded-latching models ... 35
- Alignment Key and Polarized Keying System ... 36

K Series (outdoor, keyed)
- Interconnections ... 37
- Part Numbering system ... 38
- Metal Housing models ... 39
- Watertight or vacuumtight models ... 47
- Alignment Key and Polarized Keying System ... 49

T Series (outdoor, keyed)
- Interconnections ... 50
- Part Numbering system ... 51
- Metal Housing models ... 52
- Watertight or vacuumtight models ... 55
- Plastic housing models ... 56

B, K and T Series Insert configuration, Housings, Insulators, Contacts, Collets, Variant ... 57

S Series (indoor, stepped insert)
- Interconnections ... 74
- Part Numbering system ... 75
- Metal Housing models ... 76
- Elbow socket models ... 87
- Plastic housing models ... 89
- Watertight or vacuumtight models ... 91

E Series (outdoor, stepped insert)
- Interconnections ... 93
- Part Numbering system ... 94
- Metal Housing models ... 95
- Watertight or vacuumtight models ... 101

S, and E Series Insert configuration, Housings, Insulators, Contacts, Collets, Variant ... 103

M Series (outdoor, keyed) ... 123

F Series (outdoor, keyed) ... 125

Spare parts ... 127

Accessories ... 137

Tooling ... 151

Panel cut-outs and PCB drilling pattern ... 157

Cable assembly (B, K, T, S and E series) ... 169

Technical characteristics ... 182

Product safety notice ... 198

Precision modular connectors to suit your application

Since its creation in Switzerland in 1946 the LEMO Group has been recognized as a global leader of circular Push-Pull connectors and connector solutions. Today LEMO and its affiliated companies, REDEL and COELVER, are active in more than 80 countries with the help of over 40 subsidiaries and distributors.

Over 90000 connectors

The modular design of the LEMO range provides over 90000 connectors from miniature ø 3 mm to ø 50 mm, capable of handling cable diameters up to 30 mm and for up to 114 contacts. This vast portfolio enables you to select the ideal connector configuration to suit almost any specific requirement in most markets, including medical devices, test and measurement instruments, machinery, audio video broadcast, telecommunications and military.

LEMO's Push-Pull Self-Latching Connection System

This self-latching system is renowned worldwide for its easy and quick mating and unmating features. It provides absolute security against vibration, shock or pull on the cable, and facilitates operation in a very limited space.

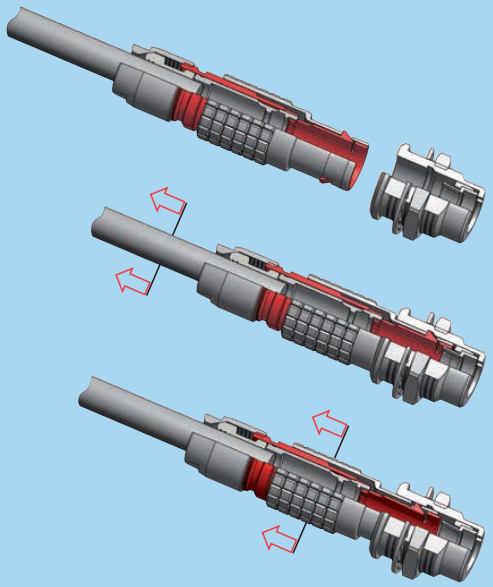

The LEMO self-latching system allows the connector to be mated by simply pushing the plug axially into the socket.

Once firmly latched, connection cannot be broken by pulling on the cable or any other component part other than the outer release sleeve.

When required, the connector is disengaged by a single axial pull on the outer release sleeve.
This first disengages the latches and then withdraws the plug from the socket.

UL Recognition

LEMO connectors are recognized by the Underwriters Laboratories (UL). The approval of the complete system (LEMO connector, cable and your equipment) will be easier because LEMO connectors are recognized.

CE marking CE

CE marking CE means that the appliance or equipment bearing it complies with the protection requirements of one or several European safety directives. CE marking CE applies to complete products or equipment, **but not to electromechanical components, such as connectors**.

RoHS

LEMO connector specifications conforms the requirements of the RoHS directive (2011/65/EU) of the European Parliament and the latest amendments. This directive specifies the restrictions of the use of hazardous substances in electrical and electronic equipment marketed in Europe.

Product safety notice & disclaimers

Please read and follow all instructions specified on the last page or on our website carefully and consult all relevant national and international safety regulations for your application. Improper handling, cable assembly, or wrong use of connectors can result in hazardous situations.

LEMO products and services are provided "as is." LEMO makes no warranties or representations with regard to LEMO product & services or use of them, express, implied or statutory, including for accuracy, completeness, or security.

In no event shall LEMO be liable for any direct, indirect, punitive, incidental, special consequential damages, to property or life, whatsoever arising out of or connected with the use or misuse of LEMO's products.

3 steps to select the right connector

Step 1: Select connector series

Select the appropriate LEMO connector series according to the environmental parameters that will affect your device or cable such as indoor, outdoor, temperature range, ingress protection of the mated connector and of your device. Use the table shown on page 4.

Part number coding

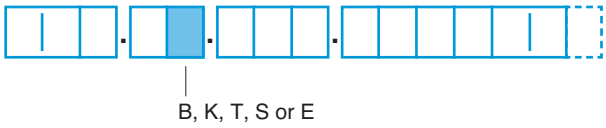

Step 2: Select connector size

Use the section (mm²) or the AWG of your cable wire to select the optimal contact diameter (values vary between solder, crimp or print contact), see page 8.

Use this optimal contact diameter to determine the right connector size as well as the insert configuration, see page 6.

Part number coding

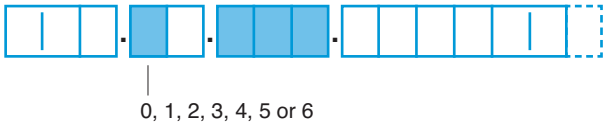

Step 3: Complete the part number

Now that you know the series, as well as the insulator configuration, complete the part numbering system with the help of the following table.

Part number coding

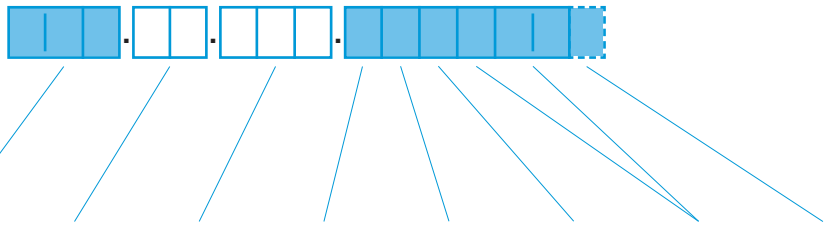

	Model	Series	Insert configuration	Housing material	Insulator material	Contact	Collet	Variant
B Series (indoor, keyed)	14	14	57	64	64	64	67	71
K Series (outdoor, keyed)	39	39	57	64	64	64	68	71
T Series (outdoor, keyed)	53	53	57	64	64	64	70	71
S Series (indoor, stepped insert)	76	76	103	112	112	112	115	121
E Series (outdoor, stepped insert)	95	95	103	112	112	112	119	121

Note: Figures in the above table refer to the catalogue pages.

Step 1: Select Connector Series

LEMO unipole and multipole connectors

The standard keyed Series (B, 00)
The characteristic feature of these connector series is a keying system which allows higher contact density and prevents all errors in alignment. The various keying alternatives prevent unwanted cross mating of otherwise similar connectors. It is also possible to use crimp contacts to reduce cable assembly time. These connector series, include the 0B to 5B range as well as the 00 multipole, some vacuumtight models are also available.

The watertight keyed Series (K, T)
These series are watertight when mated and assembled to an appropriate cable. They include the 0K to 5K series and the TT to 3T series, available in the same types as the 0B to 5B series.

The standard Series (S, 00)
The characteristic feature of these connector series is the hermaphroditic insulator in the multipole version. They include principally the 0S to 6S series, as well as the 00 unipole series.

The watertight Series (E)
These series are watertight when mated and assembled to an appropriate cable. They include the 0E to 6E series and are available in the same types as the S series.

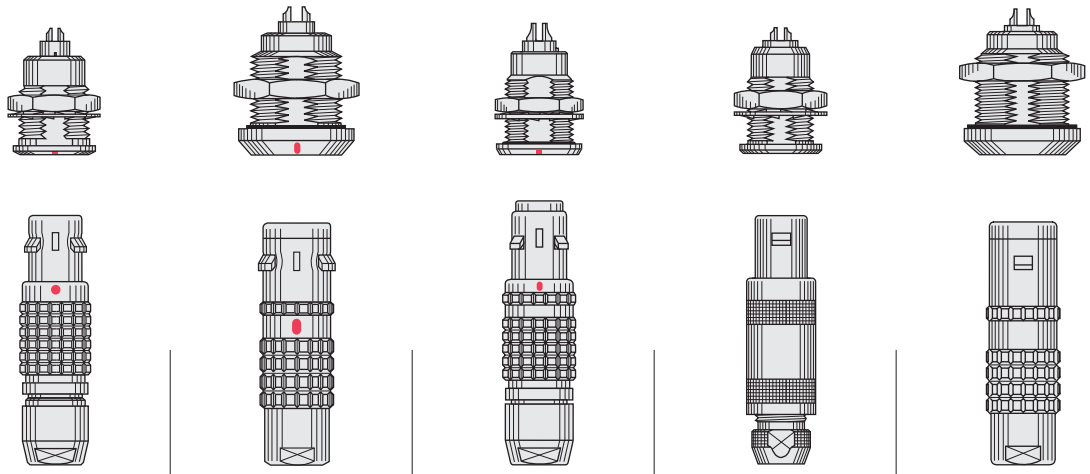

Series	00 multipole B	K	T	00 unipole S	E
Environment	indoor	outdoor or harsh environment		indoor	outdoor or harsh environment
Ingress protection [1]	IP50	IP66 to IP68		IP50	IP66 to IP68
Ingress protection [2]	IP50 to IP68 vacuumtight	IP66 to IP68 vacuumtight		IP50 to IP68 vacuumtight	IP66 to IP68 vacuumtight
Temperature range	- 55 to 250°C	- 55 to 200°C		- 55 to 250°C	- 55 to 200°C
Latching	Push-Pull self-latching				
Shell sizes	8 metal and 4 plastic	6 metal	5 metal	8 metal and 5 plastic	7 metal
Insulator type	Multipole			Unipole or multipole hermaphroditic	
Contact type	Solder, crimp or print			Solder, crimp or print	
Features	13 keyways	9 keyways	4 keyways	Stepped insert	
Page	11 to 36	37 to 50	51 to 56	73 to 92	93 to 102

Note:
[1] Mated connector. See ingress protection code p. 5. [2] Your device. For selection of connectors for watertight and vacuumtight devices, see p. 5.

Definition of Ingress Protection (IP code)

IEC 60529 outlines an international classification system for the sealing effectiveness of enclosures of electrical equipment against the intrusion into the equipment of foreign bodies (i.e. tools, dust, fingers) and moisture. This classification system utilizes the letters «IP» (Ingress Protection) followed by two digits.

Example: IP 50 = IP 5 0

IP letter code
1st digit
2nd digit

Degrees of protection - First digit

The first digit of the IP code indicates the degree to which persons are protected against contact with moving parts and the degree that equipment is protected against solid foreign bodies intruding into an enclosure.

Code	First digit description
0	No special protection
1	Protection from a large part of the body such as hand or from solid objects greater than 50 mm in diameter
2	Protection against objects not greater than 80 mm in length and 12 mm in diameter
3	Protection from entry by tools, wires, etc., with a diameter or thickness greater than 2.5 mm
4	Protection from entry by solid objects with a diameter or thickness greater than 1.0 mm
5	Protection from the amount of dust that would interfere with the operation of the equipment
6	Dust-tight
7	–
8	–

Degrees of protection - Second digit

The second digit indicates the degree of protection of the equipment inside the enclosure against the harmful entry of various forms of moisture (e.g. dripping, spraying, submersion, etc.)

Code	Second digit description
0	No special protection
1	Protection from vertically dripping water
2	Protection from dripping water when tilted up to 15°
3	Protection from sprayed water
4	Protection from splashed water
5	Protection from water projected from a nozzle
6	Protection against heavy seas, or powerful jets of water
7	Protection against temporary immersion
8	Protection against complete continuous submersion in water

Selection of connectors for watertight or vacuumtight devices

LEMO B and S series are rated IP50 only when mated. LEMO E, K and T series are rated IP66 (and over) only when mated. If a device must be watertight or vacuumtight when the connectors are unmated, it is important to select a watertight or vacuumtight socket. You can consider the following two situations:

A) Figure 1 shows a typical outdoor device. To ensure this device retains IP66 or above when connectors are unmated, it is important to choose a watertight socket from B, S, E, K or T series.

B) Figure 2 shows a device which is subjected to pressure difference such as a near vacuum or pressurized gas and must exhibit no leakage. To ensure the device maintains its sealing, the socket is additionally tested for helium leakage (according MIL 1344A).

Fig. 1

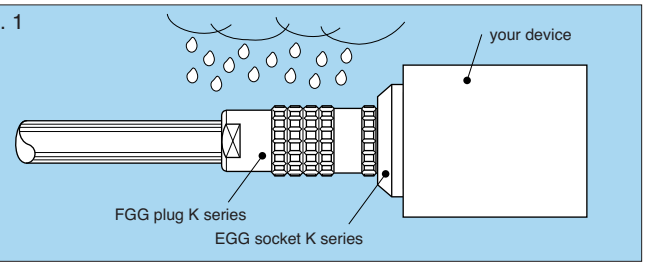

Fig. 2

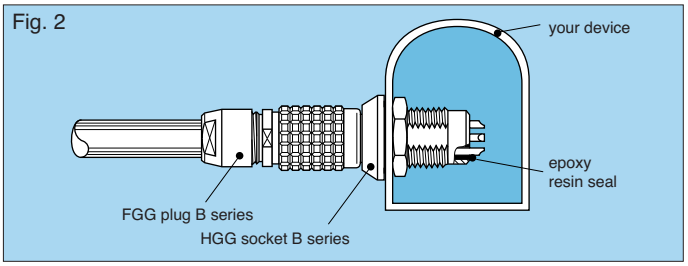

Check temperature range (see section on pages 30, 47, 55, 91 and 101).

Step 2: Select Connector Size

Select the right connector size and insert configuration

To be able to select the right connector size (0 to 6), it is important to define the contact diameter (ø A).
Find out the available contact diameter (ø A) of the LEMO connector depending on the number of contacts required and depending on the rating required (see pages 57 to 63 and 103 to 111).
The following table shows the contact diameter (ø A).

	Number of contacts	Insert configuration	Series															
			00-TT	0B-0K-0T	1B-1K-1T	XB	2B-2K-2T	3B-3K-3T	4B-4K	5B-5K	00	0S-0E	1S-1E	2S-2E	3S-3E	4S-4E	5S-5E	6S-6E
Unipole	1	**113**									1.3							
	1	**116**										1.6						
	1	**120**											2.0					
	1	**130**											3.0	3.0				
	1	**140**												4.0	4.0	4.0		
	1	**160**													6.0	6.0		
	1	**112**															12.0	
Multipole	2	**302**	0.5	0.9	1.3		2.0	3.0		6.0		0.9	1.3	1.6	2.0	4.0	6.0	
	3	**303**	0.5	0.9	1.3		1.6	2.0				0.7	0.9	1.3	2.0	3.0	6.0/4.0	6.0
	4	**304**	0.5	0.7	0.9		1.3	2.0	3.0	4.0		0.7	0.9	1.3	2.0	3.0	4.0	8.0
	5	**305**	0.35	0.7	0.9		1.3	1.6					0.9/0.7	1.3	2.0/1.3	3.0/2.0	4.0/3.0	
	6	**306**	0.35	0.5	0.7		1.3	1.6	2.0				0.7	1.3	1.3	2.0	3.0	
	7	**307**		0.5	0.7		1.3	1.6	2.0					1.3/0.9	1.3	2.0/1.3		
	8	**308**			0.7		0.9	1.3						0.9	1.3	1.3	3.0	
	9	**309**		0.5				1.3/2.0								1.3		
	10	**310**			0.5		0.9	1.3	1.6	3.0				0.9	1.3	1.3	2.0	
	12	**312**		0.35		0.7	0.7	0.9	1.3						0.9	1.3	2.0	4.0/5.0
	13	**313**													0.9	1.3		
	14	**314**			0.5		0.7	0.9		2.0					0.9	1.3	3.0/2.0	
	16	**316**			0.5		0.7	0.9	0.9	2.0					0.9	0.9	2.0	3.0
	18	**318**					0.7	0.9							0.9	0.9	3.0/1.6	4.0
	19	**319**					0.7											
	20	**320**						0.7	0.9	1.6						0.9	1.6	3.0
	22	**322**				0.5		0.7								0.9	3.0/1.6	
	24	**324**						0.7	0.9								0.9	3.0
	26	**326**					0.5	0.7										

	Number of contacts	Insert configuration	Series															
											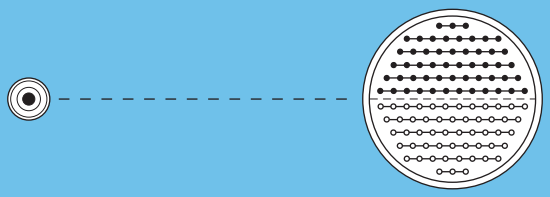							
			00-TT	0B-0K-0T	1B-1K-1T	XB	2B-2K-2T	3B-3K-3T	4B-4K	5B-5K	00	0S-0E	1S-1E	2S-2E	3S-3E	4S-4E	5S-5E	6S-6E
Multipole	30	**330**						0.7	0.9	1.3							1.3	2.0
	32	**332**					0.5											2.0
	36	**336**															1.3	2.0[1)]
	40	**340**							0.7	1.3							1.3	2.0
	44	**344**															1.3	
	48	**348**							0.7	1.3							1.3	2.0
	50	**350**								0.9								
	54	**354**								0.9								
	60	**360**																1.6
	62	**362**																1.6
	64	**364**								0.9								1.3
	72	**372**																1.3
	106	**106**																0.9

Note: [1)] 2.0 is for 6S series, for 6E the values are 1.3 and 5.0.

Verify the fitting to your wire

Verify if the selected contact diameter (ø A) of the LEMO connector fits to your cable wire diameter (AWG number or max. available section).

Contact type	Contact			Conductor						F_r [1] (N)	Notes
				Solid		Stranded					
						AWG		Section (mm²)			
	ø A (mm)	ø C (mm)	Form per fig.	AWG max.	Section max. (mm²)	min.	max.	min.	max.		
Solder	0.35	0.40	–	28	0.09	–	30	–	0.05	–	●
	0.5[2]	0.40[2]	–	28	0.09	–	30	–	0.05	–	
	0.5	0.45[7]	–	28	0.09	–	28	–	0.09	–	
	0.7[3]	0.60[3]	–	24	0.25	–	26	–	0.14	–	
	0.7	0.80	–	22	0.34	–	22[4]	–	0.34	–	
	0.9	0.80[6]	–	22[6]	0.34[6]	–	22[4][6]	–	0.34[6]	–	
	1.3	1.00	–	20	0.50	–	20[4]	–	0.50	–	
	1.6	1.40	–	16	1.00	–	18	–	1.00	–	
	2.0	1.80	–	14	1.50	–	16	–	1.50	–	
	3.0	2.70	–	10	4.00	–	12	–	4.00	–	
	4.0	3.70	–	10	6.00	–	10	–	6.00	–	
	5.0	5.20	–	–	–	–	8	–	10.00	–	
	6.0	5.20	–	–	–	–	8	–	10.00	–	
	8.0	7.00	–	–	–	–	4	–	21.00	–	
	12.0	11.50	–	–	–	–	0	–	50.00	–	
Crimp	0.5[5]	0.45	1	–	–	32	28	0.035	0.09	12	●
fig. 1	0.7	0.80	1	–	–	26	22[4]	0.140	0.34	22	●
	0.7	0.45	2	–	–	32	28	0.035	0.09	22	○
	0.9	1.10	1	–	–	24	20	0.250	0.50	30	●
	0.9	0.80	2	–	–	26	22[4]	0.140	0.34	30	○
	0.9	0.45	2	–	–	32	28	0.035	0.09	30	○
	1.3	1.40	1	–	–	20	18	0.500	1.00	40	●
	1.3	1.10	2	–	–	24	20	0.250	0.50	40	○
	1.3	0.80	2	–	–	26	22[4]	0.140	0.34	40	○
fig. 2	1.6	1.90	1	–	–	18	14[4]	1.000	1.50	50	●
	1.6	1.40	2	–	–	22	18	0.340	1.00	50	○
	2.0	2.40	1	–	–	16	12[4]	1.500	2.50	65	●
	2.0	1.90	2	–	–	18	14	1.000	1.50	65	○
	3.0	3.20	1	–	–	14	10[4]	2.500	4.00	75	●
	4.0	4.00	1	–	–	12	10	4.000	6.00	90	●

Note:
[1] contact retention force in the insulator (according to IEC 60512-8 test 15 a).
[2] for 00/TT multipole series.
[3] for S, E series.
[4] for a given AWG, the diameter of some stranded conductor designs is larger than the solder cup diameter. Make sure that the maximum conductor diameter is smaller than ø C.
[5] for 00 /TT multipole series or for 0B/0T and 1B/1T series with male contacts.
[6] for 0B.302/0B.303, 0K.302/0K.303 and 0T.302/0T.303 ø C = 1.0 mm, AWG max 20, section max (mm²) 0.50.
[7] for 00/TT and 1B/1K/1T series, according to manufacturing and plating tolerance ø C min = 0.43 mm.

● First choice alternative ○ Special order alternative

Verify the fitting to your wire

Verify if the selected contact diameter (ø A) of the LEMO connector fits to your cable wire diameter (AWG number or max. available section).

Contact type	Contact			Conductor						F_r [1] (N)	Notes
				Solid		Stranded					
	ø A (mm)	ø C (mm)	Form per fig.	AWG max.	Section max. (mm²)	AWG min.	AWG max.	Section (mm²) min.	Section (mm²) max.		
Print 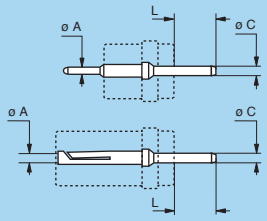	L dimensions and C are detailed in the section on PCB drilling pattern. See page 163 and 167.										●
Print (elbow) 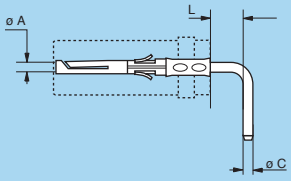	L dimensions and C are detailed in the section on PCB drilling pattern. See page 164 and 168.										●

Note: [1] contact retention force in the insulator (according to IEC 60512-8 test 15 a).

Verify the fitting to your cable

Verify if the selected connector size fits to your cable diameter.

Series	Cable diameter range (mm)			
	Collet		Collet for fitting a bend relief	
	min.	max.	min.	max.
00[1]	1.4	3.5	1.4	3.5
0B	1.4	5.6	1.4	5.2
1B	2.2	7.6	2.2	7.2
XB	4.4	8.0	4.4	7.0
2B	1.4	9.9	1.4	9.2
3B	4.2	11.9	4.2	11.0
4B	4.9	16.0	4.9	15.0
5B	9.6	25.0	9.6	15.5
0K	1.0	5.0	1.0	5.0
1K	1.3	8.5[3]	1.3	8.5[3]
2K	1.3	10.5[3]	1.3	10.5[3]
3K	2.6	15.0[3]	2.6	15.0[3]
4K	4.6	23.5[3]	4.6	15.0
5K	9.6	23.5	–	–

Series	Cable diameter range (mm)			
	Collet		Collet for fitting a bend relief	
	min.	max.	min.	max.
TT	2.4	3.0	2.4	3.0
0T	1.0	6.5[3]	1.0	6.5[3]
1T	1.3	8.5[3]	1.3	8.5[3]
2T	1.3	10.5[3]	1.3	10.5[3]
3T	2.6	15.0[3]	2.6	15.0[3]
00[2]	1.3	4.4	1.3	4.4
0S	1.3	6.2[3]	1.3	6.2[3]
1S	1.4	8.7[3]	1.4	8.7[3]
2S	1.3	10.5[3]	1.3	10.5[3]
3S	2.6	13.0[3]	2.6	13.0[3]
4S	4.1	22.0[3]	4.1	13.0
5S	6.1	30.0	–	–
6S	11.1	30.0	–	–

Series	Cable diameter range (mm)			
	Collet		Collet for fitting a bend relief	
	min.	max.	min.	max.
0E	1.0	5.0	1.0	5.0
1E	1.3	8.5[3]	1.3	8.5[3]
2E	1.3	10.5[3]	1.3	10.5[3]
3E	2.6	15.0[3]	2.6	15.0[3]
4E	4.8	23.5[3]	4.8	15.0
5E	9.6	23.5	–	–
6E	13.0	30.0	–	–

Note:
[1] for multipole only.
[2] for unipole only.
[3] for these series the maximum cable diameter require models with oversized cable collet (type K).

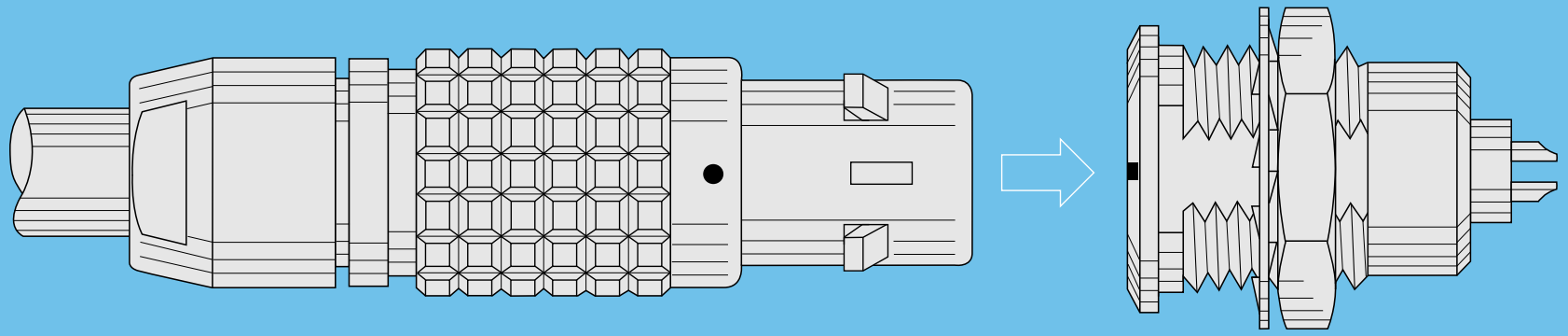

B SERIES

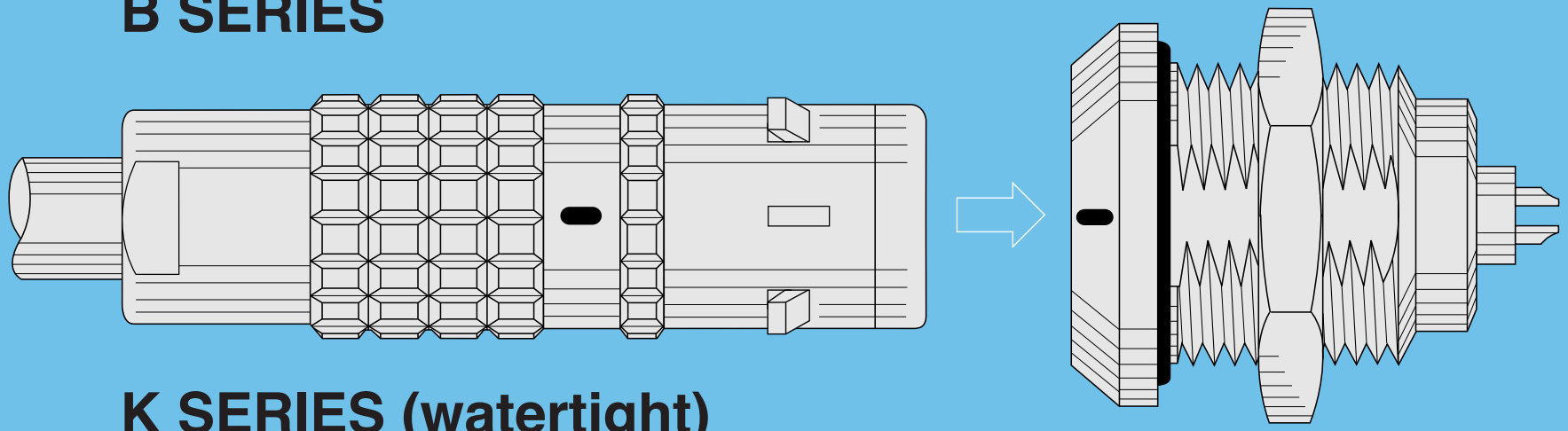

K SERIES (watertight)

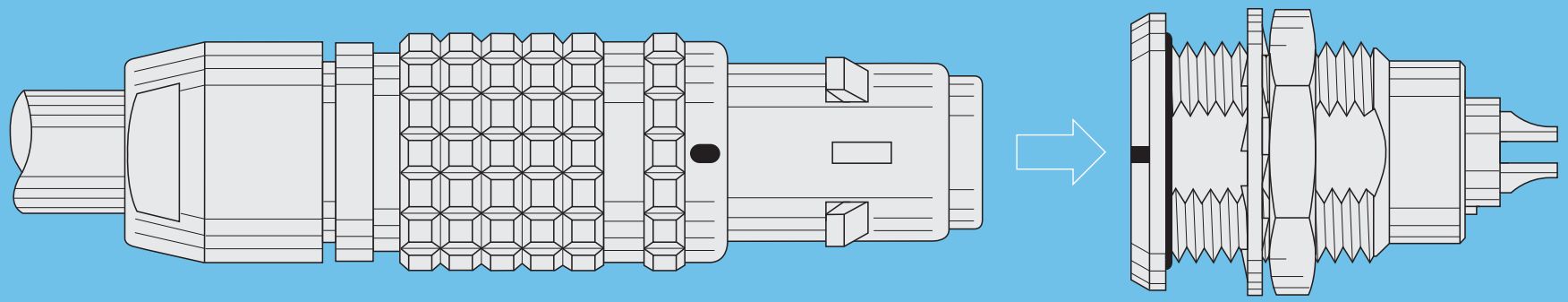

T SERIES (watertight)

B Series

B series connectors provide the following main features:
- security of the Push-Pull self-latching system
- solder, crimp or print contacts (straight or elbow)
- multiple key options to avoid cross mating of similar connectors
- 360° screening for full EMC shielding.
- multipole types 2 to 64 contacts
- high packing density for space savings
- keying system («G» key standard) for connector alignment

Metal housing models (page 14)

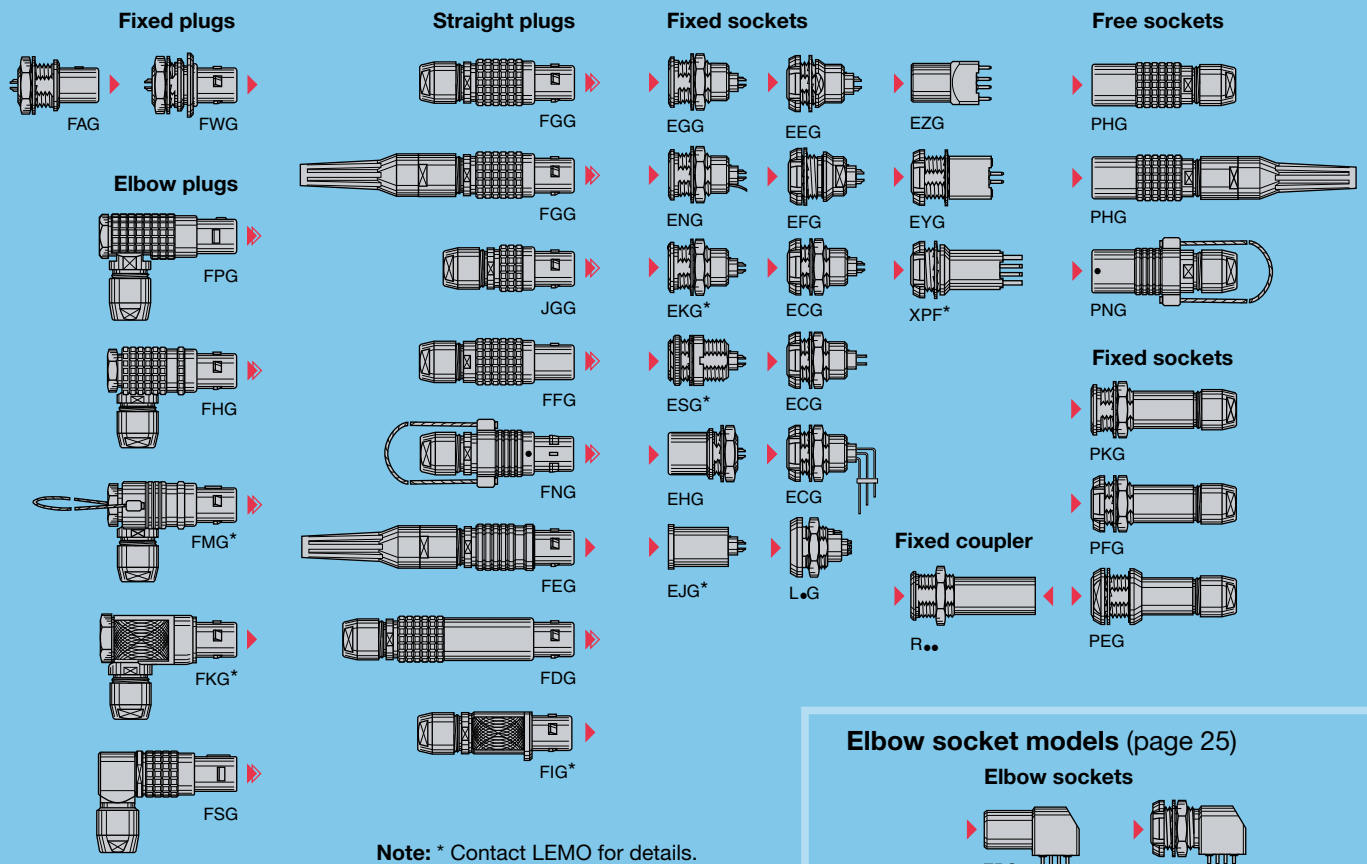

Note: * Contact LEMO for details.

Elbow socket models (page 25)

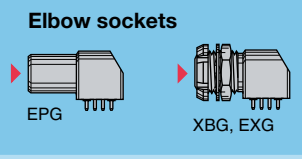

Plastic housing models (page 28)

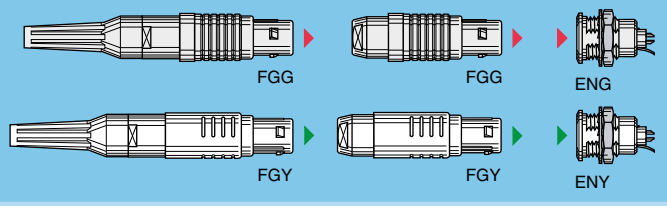

Bridge models (page 34)

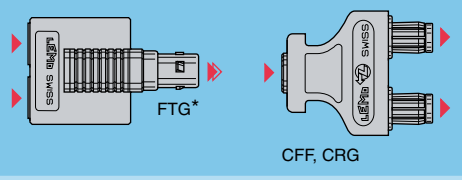

Watertight or vacuumtight models (page 30)

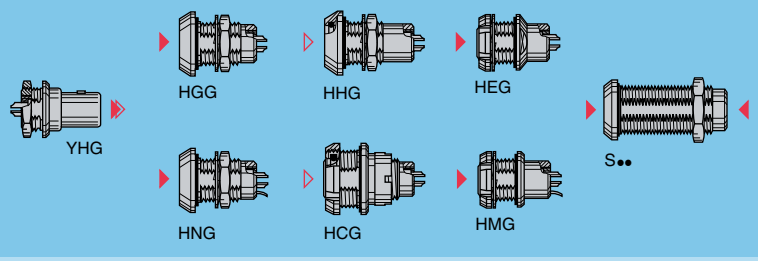

Threaded-latching models (page 35)

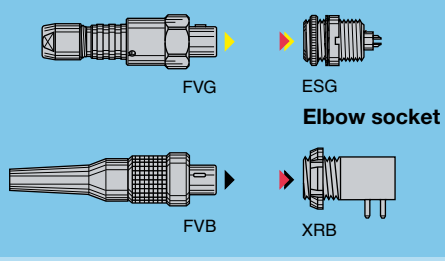

Part Numbering System

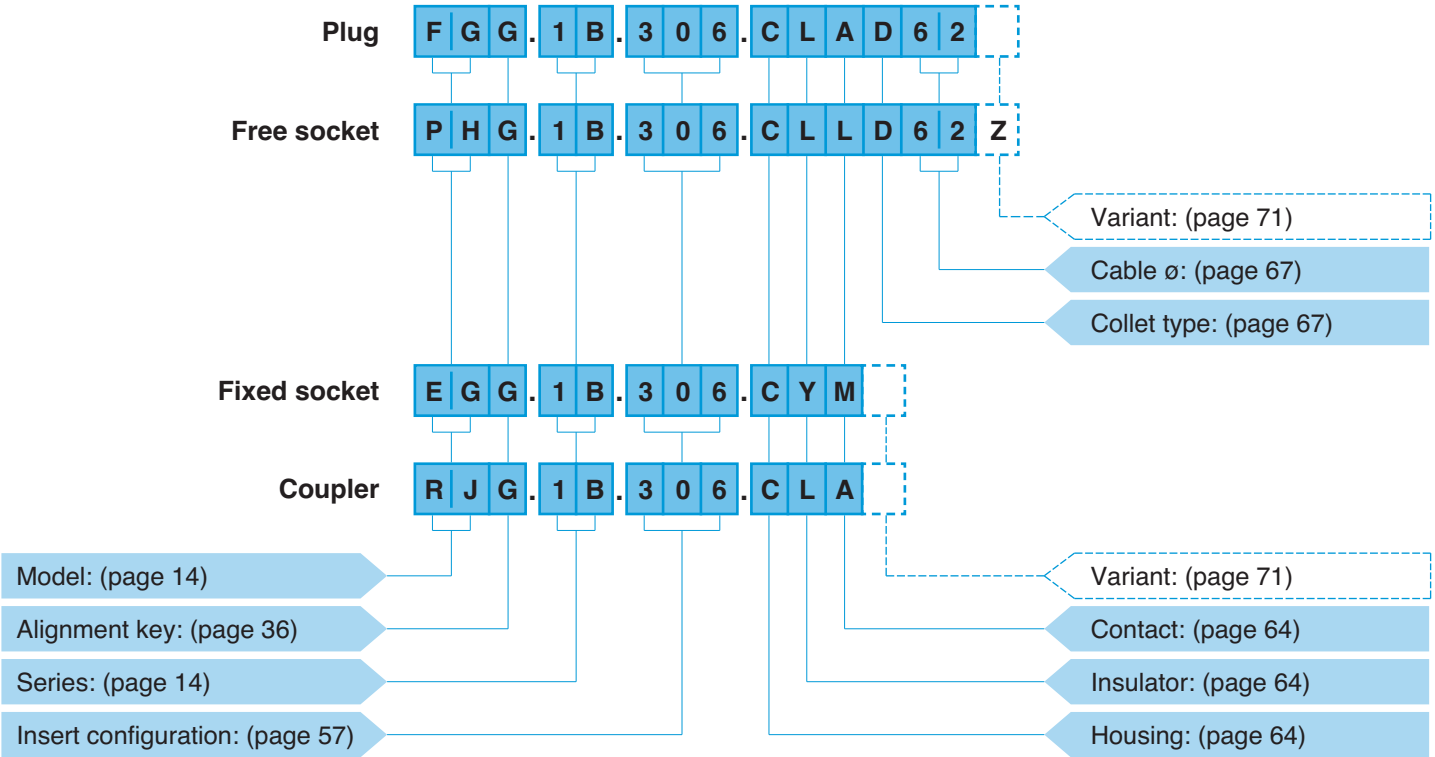

FGG.1B.306.CLAD62 = straight plug with key (G) and cable collet, 1B series, multipole type with 6 contacts, outer shell in chrome-plated brass, PEEK insulator, male solder contacts, D type collet for 6.0 mm diameter cable.

PHG.1B.306.CLLD62Z = free socket with key (G) and cable collet, 1B series, multipole type with 6 contacts, outer shell in chrome-plated brass, PEEK insulator, female solder contacts, D type collet for 6.0 mm diameter cable and nut for fitting a bend relief.

EGG.1B.306.CYM = fixed socket, nut fixing, with key (G), 1B series, multipole type with 6 contacts, outer shell in chrome-plated brass, PEEK extended insulator, female crimp contacts.

RJG.1B.306.CLA = straight fixed coupler with keys (J) at the flange end and key (G) at the other end, 1B series, multipole type with 6 contacts, outer shell in chrome-plated brass, PEEK insulator, male-female contacts.

Part Section Showing Internal Components

Fixed socket

1. outer shell
2. earthing crown
3. retaining ring
4. hexagonal nut
5. locking washer
6. insulator
7. female contact

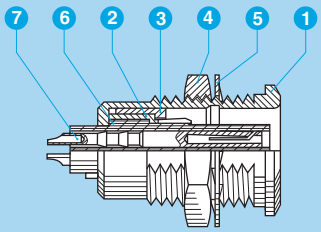

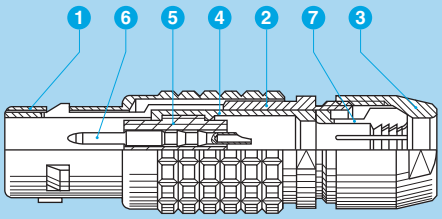

Straight plug

1. outer shell
2. latch sleeve
3. collet nut
4. split insert carrier
5. insulator
6. male contact
7. collet

Metal housing models

Technical Characteristics

Mechanical and Climatical

Characteristics	Value	Standard
Endurance[1]	> 5000 cycles[2]	IEC 60512-5 test 9a
Humidity	up to 95% at 60° C	
Temperature range	- 55° C, + 250° C	
Resistance to vibrations	10-2000 Hz, 15g	IEC 60512-4 test 6d
Shock resistance	100 g, 6 ms	IEC 60512-4 test 6c
Salt spray corrosion test[3]	> 1000h	IEC 60512-6 test 11f
Protection index (mated)	IP 50	IEC 60529
Climatical category	55/175/21	IEC 60068-1

Electrical

Characteristics		Value	Standard
Shielding efficiency	at 10 MHz	> 75 dB	IEC 60169-1-3
	at 1 GHz	> 40 dB	IEC 60169-1-3

Note:
the various tests have been carried out with FGG and EGG connector pairs, with chrome-plated brass shell and PEEK insulator.
Detailed electrical characteristics, as well as materials and treatment are presented in the chapter Technical Characteristics on page 182.
1) see page 189, contact resistance after mating cycles. See page 185, mechanical endurance latching force.
2) 1000 cycles for FEG models.
3) for chrome plated product (« C » material code).

FGG Straight plug, key (G) or keys (A…M and R), cable collet

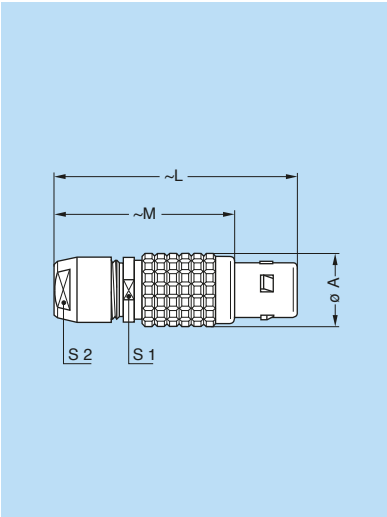

Reference		Dimensions (mm)				
Model	Series	A	L	M	S1	S2
FGG	00[1]	6.4	28.5	20.5	5.5	5
FGG	0B	9.5	36.0	26.0	8.0	7
FGG	1B	12.0	43.0	32.0	10.0	9
FGG	XB	13.0	44.0	33.5	11.0	10
FGG	2B	15.0	50.0	38.0	13.0	12
FGG	3B	18.0	58.0	43.0	15.0	14
FGG	4B	25.0	75.0	57.0	21.0	20
FGG	5B	35.0	103.0	78.0	31.0	30

M1 Cable assembly (page 169)

Note: 1) the surface design of the 00 series is different.

FGG Straight plug, key (G) or keys (A…M), cable collet and nut for fitting a bend relief 2)

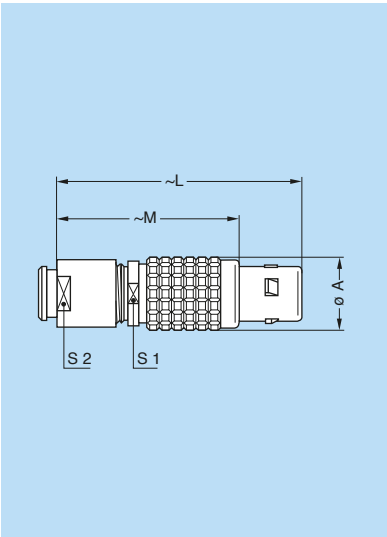

Reference		Dimensions (mm)				
Model	Series	A	L	M	S1	S2
FGG	00[1]	6.4	28.7	20.7	5.5	6
FGG	0B	9.5	35.0	25.0	8.0	7
FGG	1B	12.0	42.0	31.0	10.0	9
FGG	XB	13.0	47.5	37.0	11.0	10
FGG	2B	15.0	49.0	37.0	13.0	12
FGG	3B	18.0	56.5	41.5	15.0	15
FGG	4B	25.0	71.0	53.0	21.0	20

M1 Cable assembly (page 169)

Note: 1) the surface design of the 00 series is different.

Note: 2) to order, add a «Z» at the end of the reference.
The bend relief must be ordered separately (see page 145).

JGG Straight plug, short version, key (G), cable collet

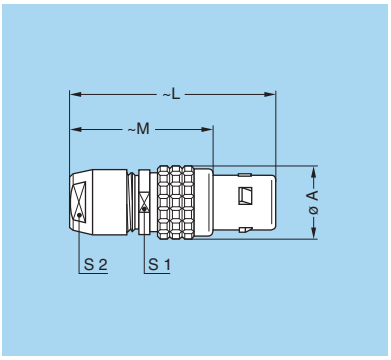

Reference		Dimensions (mm)				
Model	Series	A	L	M	S1	S2
JGG	**0B**	9.5	32	22	8	7

M4 Cable assembly (page 171)

FFG Straight plug, non-latching, key (G) or keys (A…M), cable collet

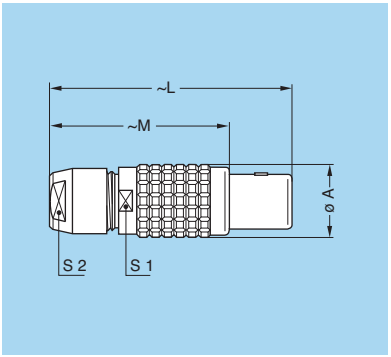

Reference		Dimensions (mm)				
Model	Series	A	L	M	S1	S2
FFG	**0B**	9.5	36	26	8	7
FFG	**1B**	12.0	43	32	10	9
FFG	**2B**	15.0	50	38	13	12
FFG	**3B**	18.0	58	43	15	14
FFG	**4B**	25.0	75	57	21	20

M1 Cable assembly (page 169)

FNG Straight plug, key (G) or keys (A…M and R), cable collet and lanyard release

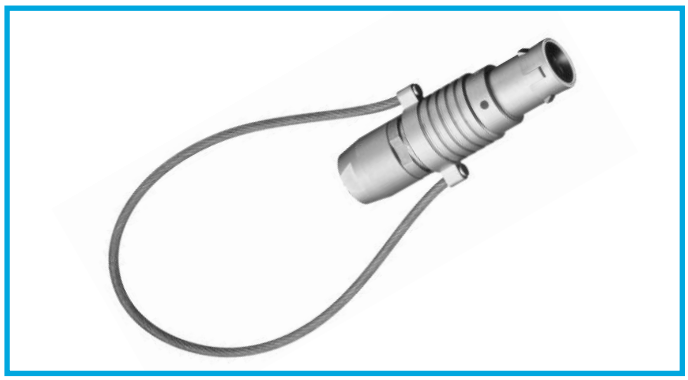

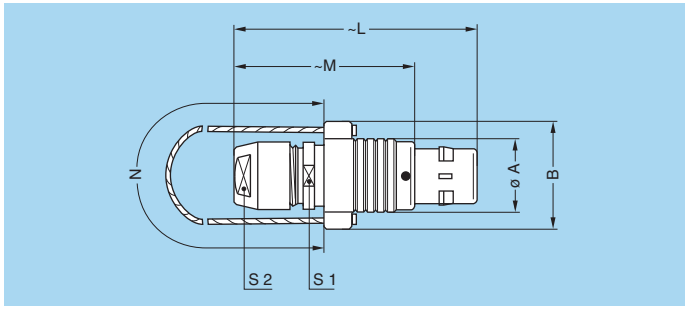

Reference		Dimensions (mm)						
Model	Series	A	B	L	M	N	S1	S2
FNG	**0B**	9.5	15.5	36.0	26.0	140	8	7
FNG	**1B**	12.0	18.0	43.0	32.0	140	10	9
FNG	**2B**	15.0	21.0	49.0	37.0	160	13	12
FNG	**3B**	18.0	25.0	58.0	43.0	190	15	14
FNG	**4B**	25.0	32.0	75.0	57.0	230	21	20
FNG	**5B**	35.0	42.0	103.0	78.0	300	31	30

M1 Cable assembly (page 169)

Note: cable material: stainless steel with Polyamide sheath.

FEG Straight plug, key (G) or keys (A…L), cable collet, front seal and nut for fitting a bend relief [1)]
(IP 54 protection index when mated)

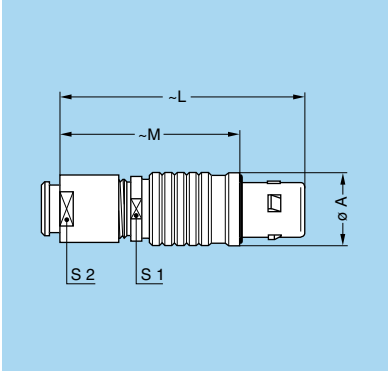

Reference		Dimensions (mm)				
Model	Series	A	L	M	S1	S2
FEG	**0B**	11.0	35.0	25.0	8	7
FEG	**1B**	13.5	42.0	33.0	10	9
FEG	**2B**	16.5	48.0	36.0	13	12
FEG	**3B**	19.0	56.5	41.5	15	15

M1 Cable assembly (page 169)

Note: [1)] to order, add a «Z» at the end of the reference.
The bend relief must be ordered separately (see page 145).

FDG Straight plug, long version, key (G) or keys (A…L), cable collet

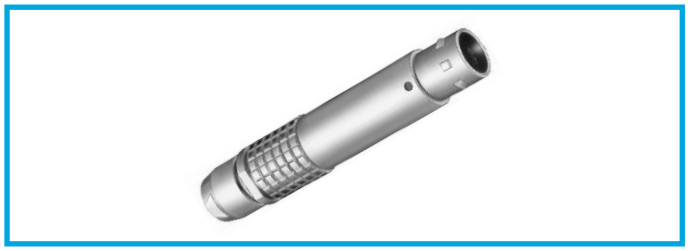

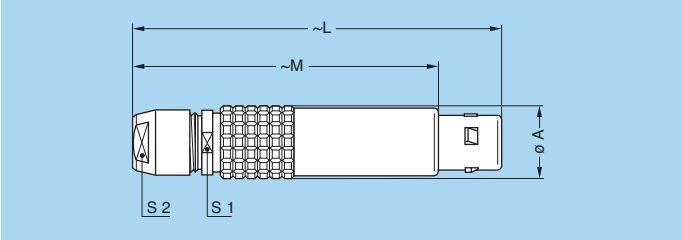

Reference		Dimensions (mm)				
Model	Series	A	L	M	S1	S2
FDG	**1B**	12	68	57	10	9
FDG	**2B**	15	79	67	13	12

M2 Cable assembly (page 171)

FWG Fixed plug, nut fixing, key (G) or keys (A…L)

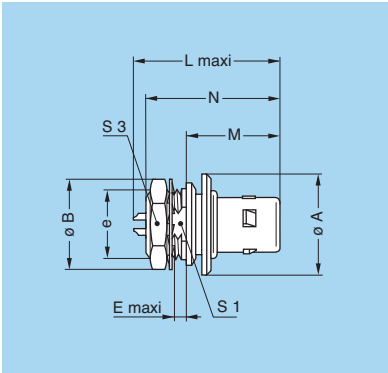

Reference		Dimensions (mm)								
Model	Series	A	B	e	E	L	M	N[1)]	S1	S3
FWG	**0B**	14.0	12.4	M9x0.6	1.8	22.5	14.5	19.5	8.2	11
FWG	**1B**	18.0	15.8	M12x1.0	2.9	24.9	17.0	24.8	10.5	14
FWG	**2B**	19.5	19.2	M15x1.0	4.1	28.6	18.0	27.3	13.5	17
FWG	**3B**	25.0	25.0	M18x1.0	4.2	32.1	23.0	31.5	16.5	22

P9 Panel cut-out (page 157)

Note: [1)] maximum length with crimp contacts

FAG Fixed plug, non-latching, nut fixing, key (G) or keys (A…M and R)

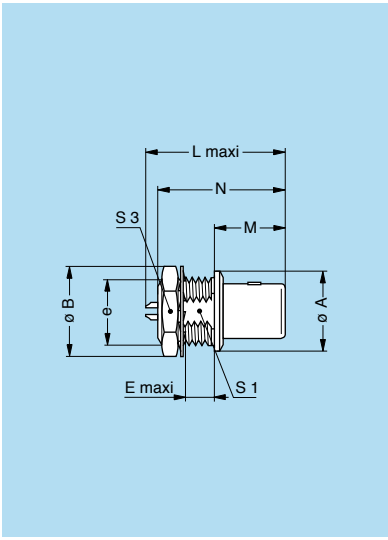

Reference		Dimensions (mm)								
Model	Series	A	B	e	E	L	M	N[1)]	S1	S3
FAG	00	8	10.2	M7x0.5	2.9	18.1	9.0	15.0	6.3	9
FAG	0B	10	12.4	M9x0.6	4.2	20.8	11.5	18.9	8.2	11
FAG	1B	14	15.8	M12x1.0	5.4	25.2	12.5	21.6	10.5	14
FAG	2B	18	19.2	M15x1.0	6.0	28.7	13.8	23.9	13.5	17
FAG	3B	22	25.0	M18x1.0	5.8	32.1	17.0	30.2	16.5	22
FAG	4B	29	34.0	M25x1.0	6.8	37.1	20.5	34.7	23.5	30
FAG	5B	40	40.0	M35x1.0	6.8	47.1	28.0	42.8	33.5	–

P1 Panel cut-out (page 157)

Note: The 5B series is delivered without locking washer or tapered washer and with a round nut.

Note: [1)] maximum length with crimp contacts.

FPG Elbow (90°) plug, key (G) or keys (A…M and R), cable collet

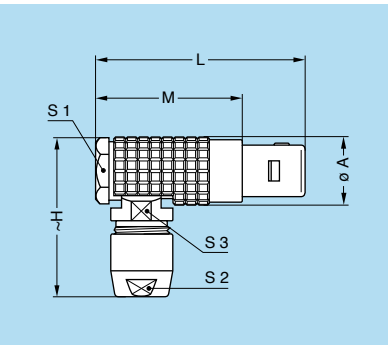

Reference		Dimensions (mm)						
Model	Series	A	H	L	M	S1	S2	S3
FPG	00	7.5	18	24.5	16.5	6.5	5	5.5
FPG	0B	9.5	23	30.0	20.0	8.0	7	8.0
FPG	1B	12.0	29	36.0	25.0	11.0	9	10.0
FPG	2B	15.0	35	41.5	29.5	13.5	12	13.0

M3 Cable assembly (page 169)

FHG Elbow (90°) plug, key (G) or keys (A…M and R), cable collet

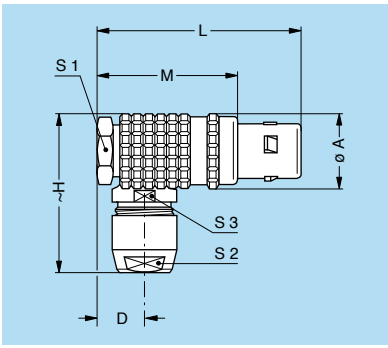

Reference		Dimensions (mm)							
Model	Series	A	D	H	L	M	S1	S2	S3
FHG	3B	19	10	37	50	35	17	14	15
FHG	4B	26	15	52	67	49	22	20	21
FHG	5B	36	21	74	90	65	32	30	31

M3 Cable assembly (page 169)

FSG Anglissimo right angle plug, key (G) or keys (A…M), cable collet

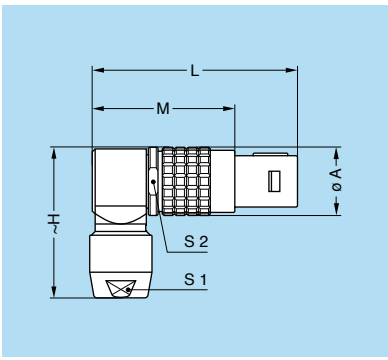

Reference		Dimensions (mm)					
Model	Series	A	H	L	M	S1	S2
FSG	00	8.0	18.1	24.8	16.8	5	7
FSG	0B	10.0	22.4	30.3	20.3	7	9
FSG	1B	12.0	26.4	36.5	25.5	9	11
FSG	2B	16.5	34.5	44.0	32.0	12	15
FSG	3B	20.0	39.2	52.4	37.4	14	19

M5 Cable assembly (page 170)

EGG Fixed socket, nut fixing, key (G) or keys (A…M and R)

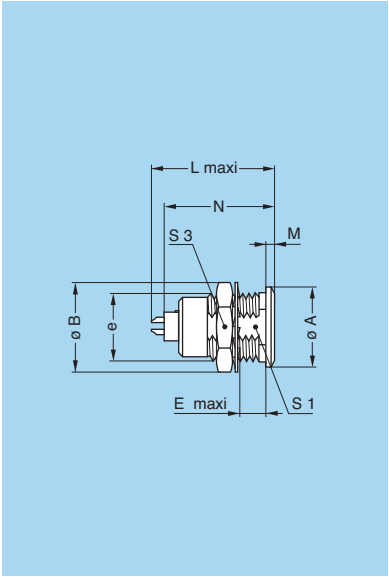

Reference		Dimensions (mm)								
Model	Series	A	B	e	E	L	M	N[1)]	S1	S3
EGG	**00**	8	10.2	M7x0.5	6.0	15.5	1.0	13.7	6.3	9
EGG	**0B**	10	12.4	M9x0.6	7.0	20.7	1.2	19.1	8.2	11
EGG	**1B**	14	15.8	M12x1.0	7.5	23.0	1.5	21.1	10.5	14
EGG	**XB**	16	19.0	M14x1.0	7.0	23.5	1.5	20.0	12.5	17
EGG	**2B** [2)]	18	19.2	M15x1.0	8.5	26.7	1.8	24.6	13.5	17
EGG	**3B**	22	25.0	M18x1.0	11.5	30.7	2.0	28.1	16.5	22
EGG	**4B**	28	34.0	M25x1.0	12.0	35.7	2.5	34.1	23.5	30
EGG	**5B**	40	40.0	M35x1.0	11.0	43.5	3.0	39.6	33.5	–

P1 Panel cut-out (page 157)

Note: The 5B series is delivered with a tapered washer and a round nut.

Note: [1)] maximum length with crimp contacts.
[2)] EGG.2B.304.CLL and EGG.2B.307.CLL are UL 508A under file E119802.

ENG Fixed socket with earthing tag, nut fixing, key (G) or keys (A…M)

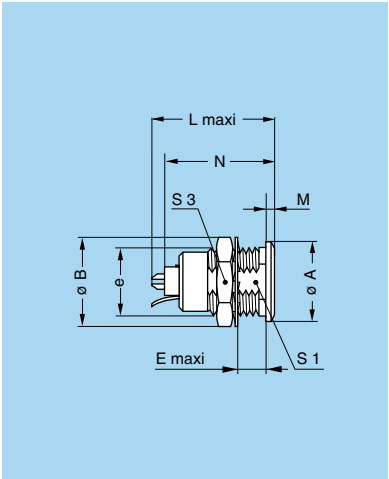

Reference		Dimensions (mm)								
Model	Series	A	B	e	E	L	M	N[1)]	S1	S3
ENG	**00**	8	10.2	M7x0.5	6.0	15.5	1.0	13.7	6.3	9
ENG	**0B**	10	12.4	M9x0.6	7.0	20.7	1.2	19.1	8.2	11
ENG	**1B** [2)]	14	15.8	M12x1.0	7.5	23.0	1.5	21.1	10.5	14
ENG	**2B**	18	19.2	M15x1.0	8.5	26.7	1.8	24.6	13.5	17
ENG	**3B**	22	25.0	M18x1.0	11.5	30.7	2.0	28.1	16.5	22
ENG	**4B**	28	34.0	M25x1.0	12.0	35.7	2.5	34.1	23.5	30

P1 Panel cut-out (page 157)

Note:
[1)] maximum length with crimp contacts.
[2)] for the 1B series the earthing tag is on the same side of the key.

EHG Fixed socket, nut fixing, key (G) or keys (A…M and R), and protruding shell

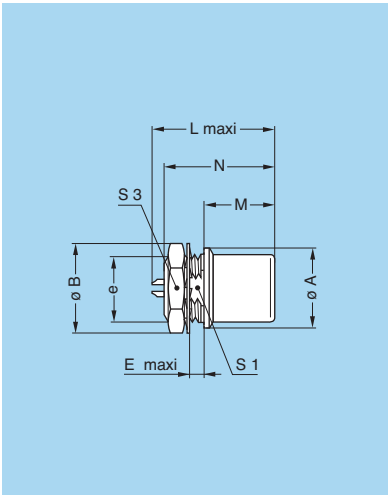

Reference		Dimensions (mm)								
Model	Series	A	B	e	E	L	M	N[1)]	S1	S3
EHG	**00**	8	10.2	M7x0.5	2.0	15.5	8.5	13.7	6.3	9
EHG	**0B**	10	12.4	M9x0.6	2.0	19.5	12.5	19.1	8.2	11
EHG	**1B**	14	15.8	M12x1.0	4.0	21.7	12.0	21.1	10.5	14
EHG	**2B**	18	19.2	M15x1.0	5.1	22.7	12.5	24.6	13.5	17
EHG	**3B**	22	25.0	M18x1.0	7.1	30.7	13.5	30.3	16.5	22
EHG	**5B**	40	40.0	M35x1.0	2.5	43.5	28.0	38.5	33.5	–

P1 Panel cut-out (page 157)

Note: The 5B series is delivered without locking washer or tapered washer and with a round nut.

Note: [1)] maximum length with crimp contacts.

EEG Fixed socket, nut fixing, key (G) or keys (A…M and R) (back panel mounting)

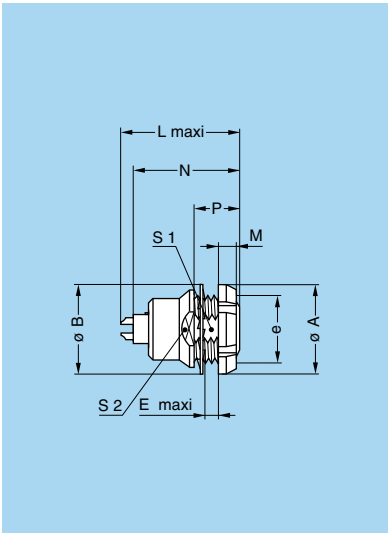

Reference		Dimensions (mm)									
Model	Series	A	B	e	E	L	M	N[1)]	P	S1	S2
EEG	00	10	9.5	M7x0.5	2.3	15.5	2.5	13.7	6.0	6.3	7.5
EEG	0B	12	12.5	M9x0.6	2.4	20.7	2.5	19.1	6.3	8.2	9.0
EEG	1B	16	16.0	M12x1.0	6.5	23.0	3.5	21.1	11.0	10.5	13.0
EEG	2B	20	20.0	M15x1.0	4.3	26.7	3.5	24.6	9.0	13.5	15.0
EEG	3B	24	25.0	M18x1.0	6.1	30.7	4.5	28.1	12.0	16.5	20.0
EEG	4B	30	32.1	M25x1.0	10.6	35.7	4.5	34.1	16.5	23.5	26.0
EEG	5B	41	40.0	M35x1.0	13.5	43.5	5.0	39.6	19.5	33.5	38.0

P1 Panel cut-out (page 157)

Note: The 3B, 4B and 5B series are delivered with a conical nut.
The 5B series is delivered without locking washer or tapered washer.

Note: 1) maximum length with crimp contacts.

EFG Fixed socket, nut fixing, key (G) or keys (A…M), with two flats on the shell and O-ring (back panel mounting)

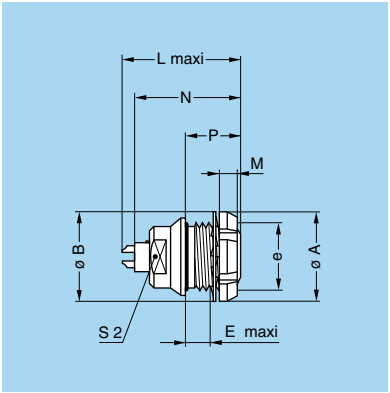

Reference		Dimensions (mm)								
Model	Series	A	B	e	E	L	M	N[1)]	P	S2
EFG	0B	12	12.5	M9x0.6	5.5	20.7	2.5	19.1	9	8

P2 Panel cut-out (page 157)

Note: 1) maximum length with crimp contacts.

ECG Fixed socket with two nuts, key (G) or keys (A…M and R) (back panel mounting)

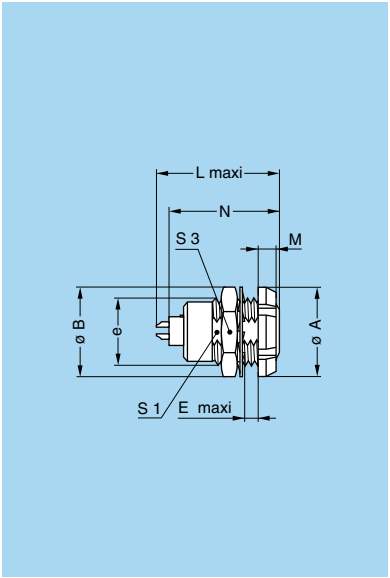

Reference		Dimensions (mm)								
Model	Series	A	B	e	E	L	M	N[1)]	S1	S3
ECG	00	10	10.2	M7x0.5	4.3	13.7	2.5	13.7	6.3	9
ECG	0B	12	12.4	M9x0.6	5.5	20.7	2.5	19.1	8.2	11
ECG	1B	16	15.8	M12x1.0	6.0	23.0	3.5	21.1	10.5	14
ECG	XB	18	19.0	M14x1.0	6.0	23.5	3.5	20.0	12.5	17
ECG	2B	20	19.2	M15x1.0	6.5	26.7	3.5	24.6	13.5	17
ECG	3B	24	25.0	M18x1.0	9.0	30.7	4.5	28.1	16.5	22
ECG	4B	30	34.0	M25x1.0	10.0	35.7	4.5	32.6	23.5	30
ECG	5B	41	40.0	M35x1.0	9.0	43.5	5.0	39.6	33.5	–

P1 Panel cut-out (page 157)

Note: The 3B, 4B and 5B series are delivered with a conical nut.
The 5B series is delivered with a tapered washer and a round nut.

Note: 1) maximum length with crimp contacts.

ECG Fixed socket with two nuts, key (G) or keys (A…F and R) and straight contact for printed circuit
(back panel mounting)

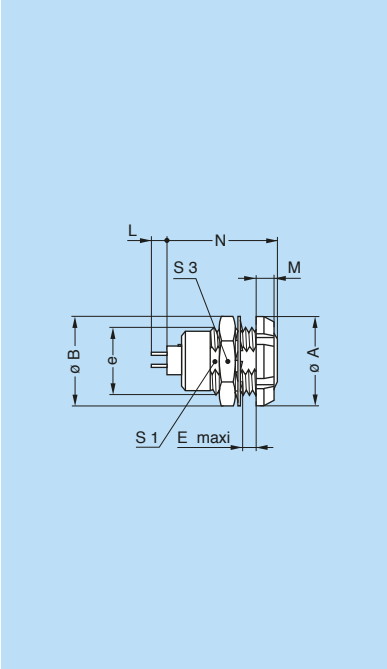

Reference		Dimensions (mm)							
Model	Series	A	B	e	E	M	N	S1	S3
ECG	00	10	10.2	M7x0.5	4.3	2.5	13.7	6.3	9
ECG	0B	12	12.4	M9x0.6	5.5	2.5	16.1	8.2	11
ECG	1B	16	15.8	M12x1.0	6.0	3.5	19.8	10.5	14
ECG	XB	18	19.0	M14x1.0	6.0	3.5	20.0	12.5	17
ECG	2B	20	19.2	M15x1.0	6.5	3.5	21.8	13.5	17
ECG	3B	24	25.0	M18x1.0	9.0	4.5	25.8	16.5	22
ECG	4B	30	34.0	M25x1.0	10.0	4.5	29.8	23.5	30
ECG	5B	41	40.0	M35x1.0	9.0	5.0	36.8	33.5	–

P1 Panel cut-out (page 157)

P15 PCB drilling pattern (page 160)

Note: The 3B, 4B and 5B series are delivered with a conical nut.
The 5B series is delivered with a tapered washer and a round nut.

Note: This contact type is available for E●● socket models fitted with female contacts.
Length «L» depends on the number of contacts, see table on page 163.

ECG Fixed socket with two nuts, key (G) or keys (A…F) with elbow (90°) contact for printed circuit
(back panel mounting)

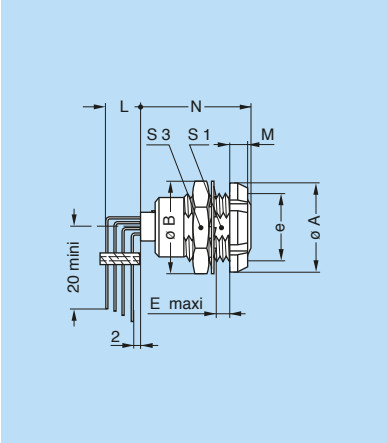

Reference		Dimensions (mm)							
Model	Series	A	B	e	E	M	N max	S1	S3
ECG	0B	12	12.4	M9x0.6	5.5	2.5	18.3	8.2	11
ECG	1B	16	15.8	M12x1.0	6.0	3.5	20.3	10.5	14
ECG	2B	20	19.2	M15x1.0	6.5	3.5	24.3	13.5	17
ECG	3B	24	25.0	M18x1.0	9.0	4.5	27.8	16.5	22

P1 Panel cut-out (page 157)

P17 PCB drilling pattern (page 164)

Note: The 3B series is delivered with a conical nut.

L●G Fixed socket, nut fixing, key (G) or keys (A…L)

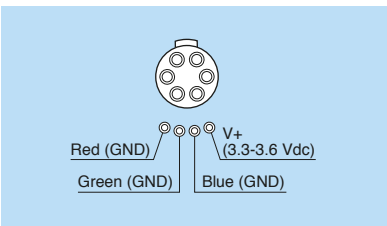

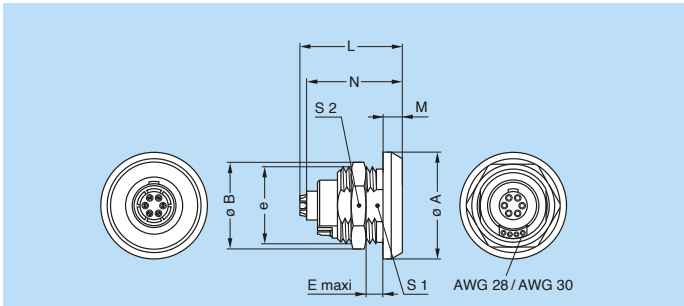

Reference		Dimensions (mm)								
Model	Series	A	B	e	E	L	M	N	S1	S2
L●G	0B	19	18.0	M13x0.75	4.0	20.7	4	19.1	11.5	16
L●G	1B	22	20.2	M15x1.00	6.5	23.0	4	21.1	13.5	16
L●G	2B	25	27.0	M20x1.00	7.5	26.7	4	24.6	18.5	24

Note: Only available with solder or crimp contacts.
LEG model is with LED flange, LNG model is with narrow LED flange and LMG model is with single standby LED flange.

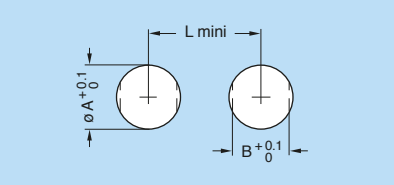

Series	Dim. (mm)		
	A	B	L
0B	13.1	11.6	24
1B	15.1	13.6	26
2B	20.1	18.6	29

EZG Straight socket for printed circuit, key (G) or keys (A, B)

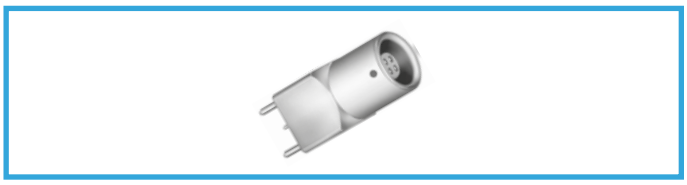

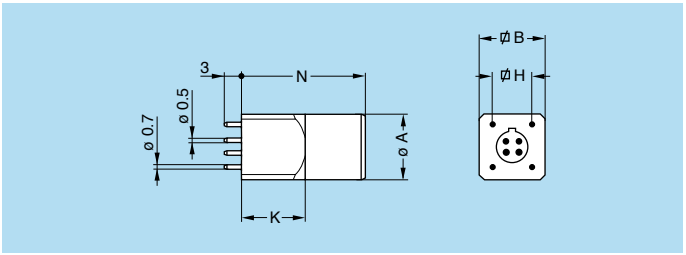

Reference		Dimensions (mm)				
Model	Series	A	B	H	K	N
EZG	**00**	6.8	7	5.08	7	14

P15 + P16 PCB drilling pattern (pages 160 and 163)

EZG Straight socket for printed circuit, key (G) or keys (A…F)

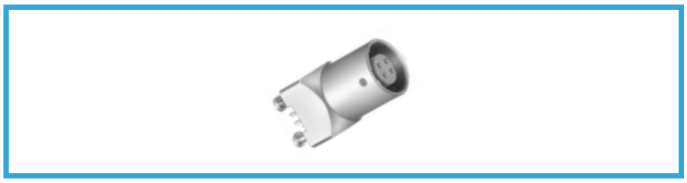

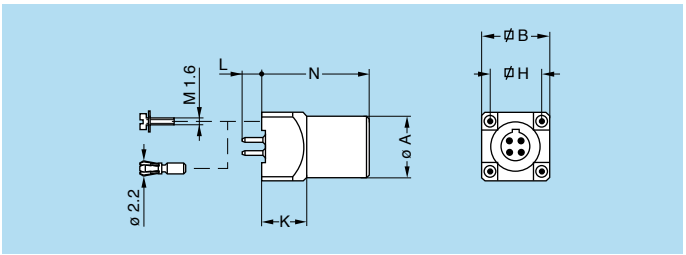

Reference		Dimensions (mm)				
Model	Series	A	B	H	K	N
EZG	**0B**	9	10	7.62	8	15.0
EZG	**1B**	11	12	7.62	8	19.0
EZG	**2B**	14	15	10.16	9	22.5

P15 + P16 PCB drilling pattern (pages 160 and 163)

Note: Length «L» depends on the number of contacts, see page 163. Add letter «B» at the end of the reference to order with integrated harpoon pins (1.6 mm PCB thickness) (only for 0B and 1B series).

EYG Fixed socket for printed circuit, nut fixing, key (G) or keys (A…F) (back panel mounting)

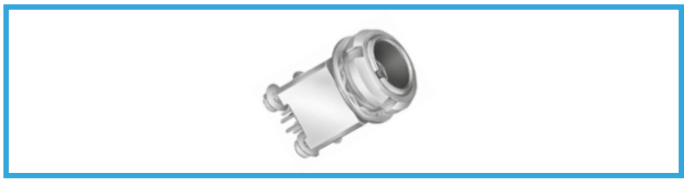

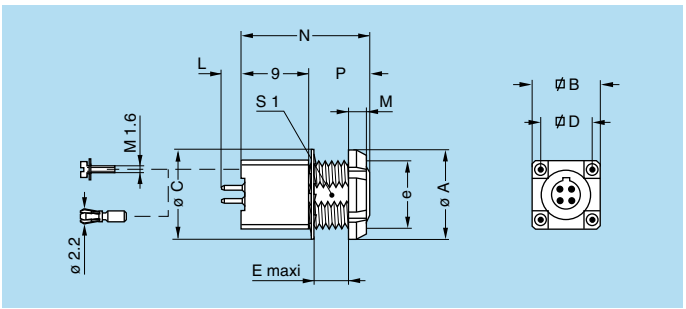

Reference		Dimensions (mm)									
Model	Series	A	B	C	D	e	E	M	N	P	S1
EYG	**0B**	12	10	12.5	7.62	M9x0.6	2.6	2.5	15.0	6.0	8.2
EYG	**1B**	14	12	16.0	7.62	M11x0.5	5.0	3.5	19.0	10.0	–
EYG	**2B**	20	15	19.5	10.16	M15x1.0	7.5	3.5	22.5	13.5	13.5

P1 Panel cut-out 0B and 2B series (page 157)

P10 Panel cut-out 1B series (page 157)

P15 + P16 PCB drilling pattern (pages 160 and 163)

Note: Length «L» depends on the number of contacts, see page 163. Add letter «B» at the end of the reference to order with integrated harpoon pins (1.6 mm PCB thickness) (only for 0B and 1B series).

PHG Free socket, key (G) or keys (A…M and R), cable collet

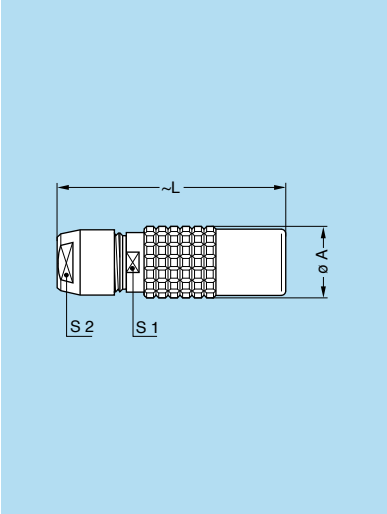

Reference		Dimensions (mm)			
Model	Series	A	L	S1	S2
PHG	**00**[1]	6.8	26.0	5.5	5
PHG	**0B**	9.5	35.5	8.0	7
PHG	**1B**	12.5	40.5	10.0	9
PHG	**XB**	13.0	46.0	11.0	10
PHG	**2B**	16.5	47.0	13.0	12
PHG	**3B**	19.0	56.0	15.0	14
PHG	**4B**	26.0	73.0	21.0	20
PHG	**5B**	36.0	99.0	31.0	30

M1 Cable assembly (page 169)

Note: [1] the surface design of the 00 series is different.

PHG Free socket, key (G) or keys (A…M), cable collet and nut for fitting a bend relief [2]

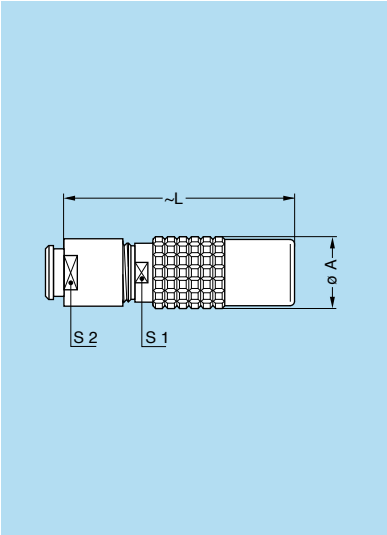

Reference		Dimensions (mm)			
Model	Series	A	L	S1	S2
PHG	**00**[1]	6.8	34.0	5.5	6
PHG	**0B**	9.5	34.5	8.0	7
PHG	**1B**	12.5	39.5	10.0	9
PHG	**XB**	13.0	49.5	11.0	10
PHG	**2B**	16.5	46.0	13.0	12
PHG	**3B**	19.0	54.5	15.0	15
PHG	**4B**	26.0	69.0	21.0	20

M1 Cable assembly (page 169)

Note: [1] the surface design of the 00 series is different.

Note: [2] to order, add a «Z» at the end of the reference.
The bend relief must be ordered separately (see page 145).

PNG Free socket, nut fixing, key (G) or keys (A…L and R), cable collet with lanyard release

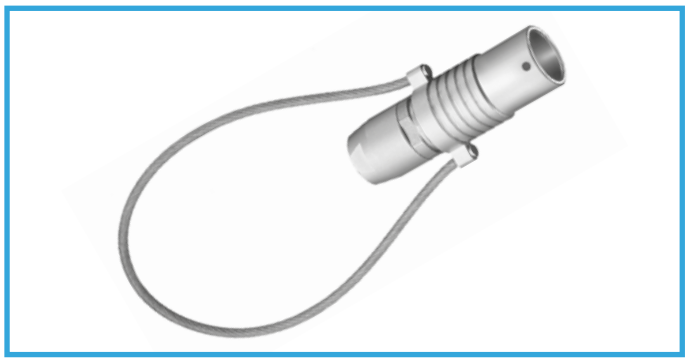

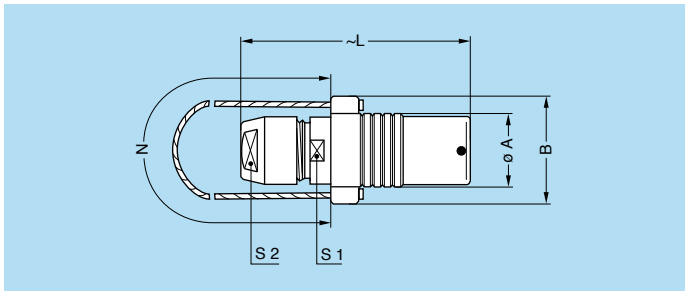

Reference		Dimensions (mm)					
Model	Series	A	B	L	N	S1	S2
PNG	**1B**	12.4	18.4	40.5	140	10	9
PNG	**2B**	16.5	22.5	47.0	160	13	12
PNG	**3B**	19.0	26.0	56.0	190	15	14
PNG	**4B**	26.0	33.0	73.0	230	21	20
PNG	**5B**	36.0	43.0	99.0	300	31	30

M1 Cable assembly (page 169)

Note: cable material: stainless steel with Polyamide sheath.

PKG Fixed socket, nut fixing, key (G) or keys (A…M and R), cable collet

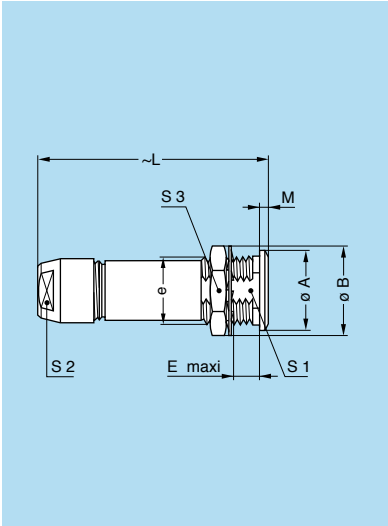

Reference		Dimensions (mm)								
Model	Series	A	B	e	E	L	M	S1	S2	S3
PKG	**00**	8	10.2	M7x0.5	6.5	26.0	1.0	6.3	5	9
PKG	**0B**	10	12.4	M9x0.6	7.0	35.5	1.2	8.2	7	11
PKG	**1B**	14	15.8	M12x1.0	7.5	40.5	1.5	10.5	9	14
PKG	**2B**	18	19.2	M15x1.0	8.5	47.0	1.8	13.5	12	17
PKG	**3B**	22	25.0	M18x1.0	11.5	56.0	2.0	16.5	14	22
PKG	**4B**	28	34.0	M25x1.0	12.0	73.0	2.5	23.5	20	30
PKG	**5B**	40	40.0	M35x1.0	11.0	99.0	3.0	33.5	30	–

P1 Panel cut-out (page 157)

M1 Cable assembly (page 169)

Note: the 5B series is delivered with a tapered washer and a round nut.

PFG Fixed socket, with two nuts, key (G) or keys (A…M and R), cable collet (back panel mounting)

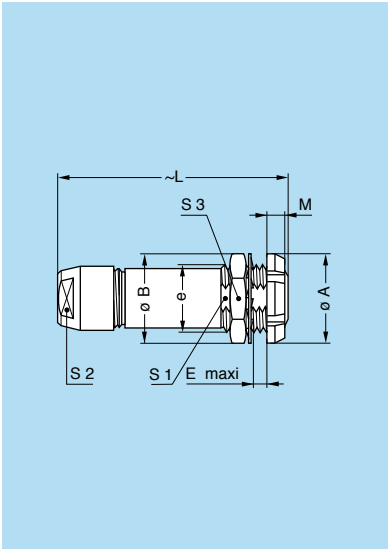

Reference		Dimensions (mm)								
Model	Series	A	B	e	E	L	M	S1	S2	S3
PFG	**00**	10	10.2	M7x0.5	5.3	26.0	2.5	6.3	5	9
PFG	**0B**	12	12.4	M9x0.6	5.0	35.5	2.5	8.2	7	11
PFG	**1B**	16	15.8	M12x1.0	5.0	40.5	3.5	10.5	9	14
PFG	**2B**	20	19.2	M15x1.0	6.5	47.0	3.5	13.5	12	17
PFG	**3B**	24	25.0	M18x1.0	9.0	56.0	4.5	16.5	14	22
PFG	**4B**	30	34.0	M25x1.0	11.0	73.0	4.5	23.5	20	30
PFG	**5B**	41	40.0	M35x1.0	10.0	99.0	5.0	33.5	30	–

P1 Panel cut-out (page 157)

M1 Cable assembly (page 169)

Note: the 3B, 4B and 5B series are delivered with a conical nut.
The 5B series is delivered with a tapered washer and a round nut.

PEG Fixed socket, nut fixing, key (G) or keys (A…L), cable collet (back panel mounting)

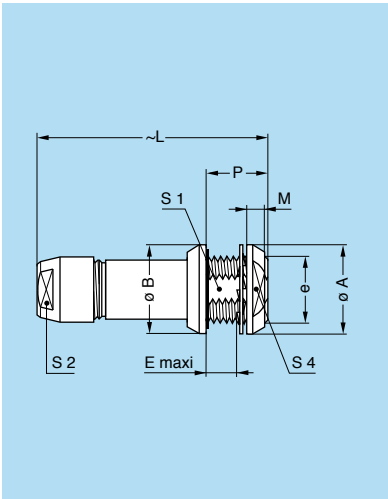

Reference		Dimensions (mm)									
Model	Series	A	B	e	E	L	M	P	S1	S2	S4
PEG	**3B**	24	25	M18x1.0	5.0	56	4.5	12	16.5	14	20
PEG	**4B**	32	34	M25x1.0	12.5	73	5.0	20	23.5	20	27

P1 Panel cut-out (page 157)

M1 Cable assembly (page 169)

Note: this model has an o-ring on the flange.

R●● Fixed coupler, nut fixing, key (G) or keys (A and J) at the flange end and keys (J, K or M) at the other end

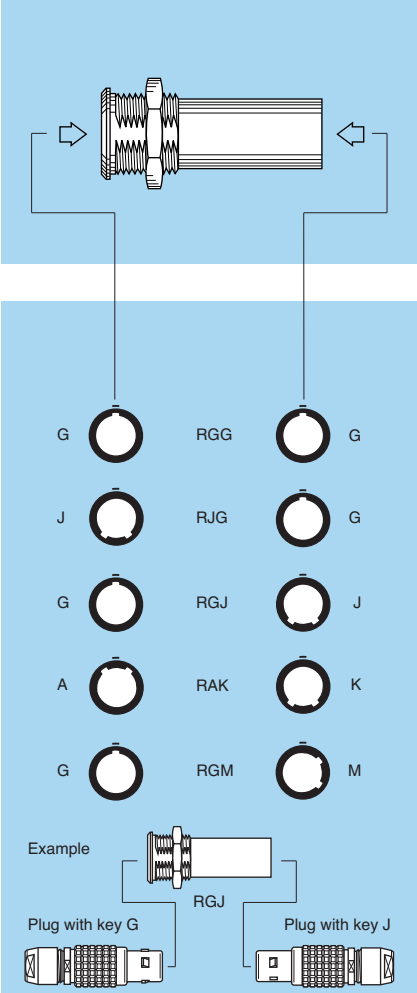

Alignment key see page 36.

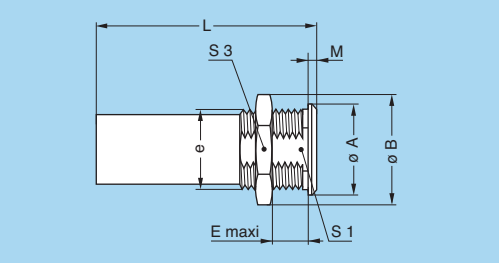

Reference		Contacts	Dimensions (mm)							
Model	Series	Type	A	B	e	E	L	M	S1	S3
RGG[1]	**0B**	female – female	12	13.8	M10x0.75	8.0	34	2.0	9.0	12
RGG[2]	**0B**	female – female	12	13.8	M10x0.75	8.0	43	2.0	9.0	12
RJG	**0B**	male – female	12	13.8	M10x0.75	8.0	34	2.0	9.0	12
RGJ	**0B**	female – male	12	13.8	M10x0.75	8.0	34	2.0	9.0	12
RAK	**0B**	female – male	12	13.8	M10x0.75	8.0	34	2.0	9.0	12
RGM	**0B**	female – male	12	13.8	M10x0.75	8.0	34	2.0	9.0	12
RGG[3]	**1B**	female – female	16	19.2	M14x1.00	8.5	47	2.5	12.5	17
RJG	**1B**	male – female	16	19.2	M14x1.00	8.5	39	2.5	12.5	17
RGJ	**1B**	female – male	16	19.2	M14x1.00	8.5	39	2.5	12.5	17
RJG	**2B**	male – female	20	21.5	M16x1.00	12.0	44	4.0	15.0	19
RGJ	**2B**	female – male	20	21.5	M16x1.00	12.0	44	4.0	15.0	19
RGJ	**3B**	female – male	25	27.0	M20x1.00	32.0	53	4.0	18.5	24
RGJ	**4B**	female – male	34	34.0	M25x1.00	50.0	65	4.0	23.5	30

P4 Panel cut-out (page 157)

Note:
[1] only available with two contacts.
[2] RGG.0B only available from 3 till 5 contacts.
[3] RGG.1B only available till 7 contacts.
For this fixed coupler, the first contact type mentioned is always the one at the flange end. On request, these couplers can be produced in other series, with other keys.

Elbow socket models

Technical Characteristics

Types

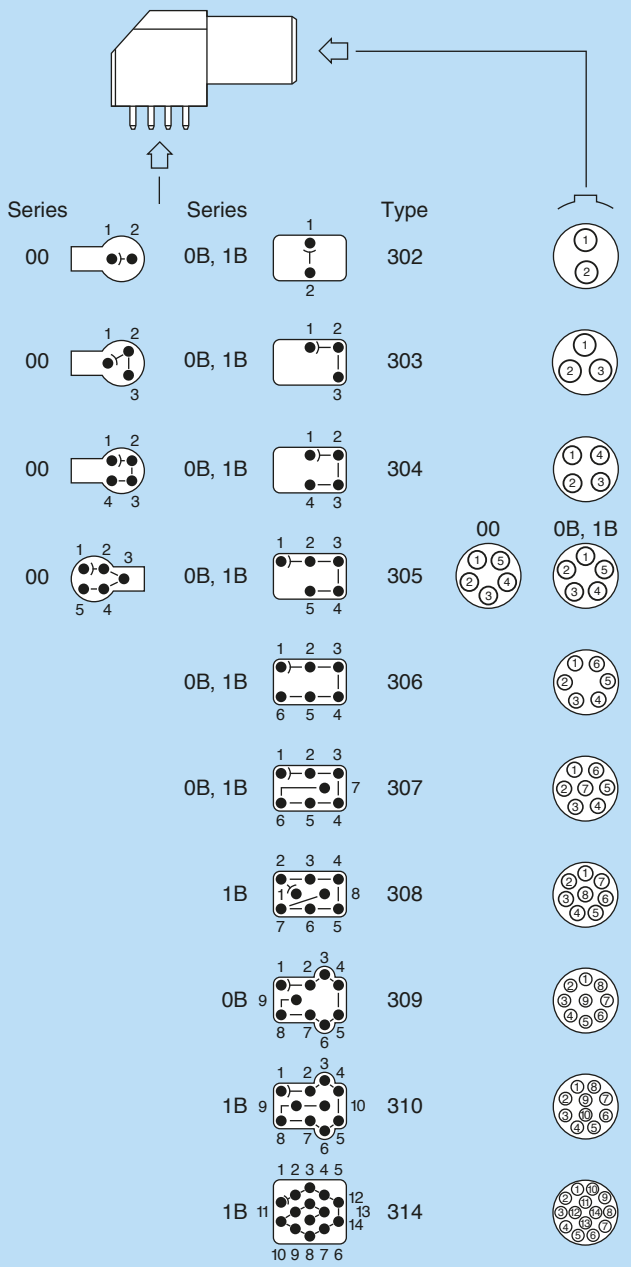

Note:
numbering sequence shown is for female contacts (G keying), for inverted contacts please contact factory.

Materials and Treatment

Component	Material	Surface Treat. (µm)		
		Cu	Ni	Au
Housing	PPS	–		
	Brass	0.5	3	–
Metallic parts	Brass	0.5	3	–
Earthing crown	Bronze	0.5	3	–
Insulator	PEEK	–		
Female contact	Bronze	0.5	3	1.5

Note:
The surface treatment standards are as follows:
– Nickel: SAE AMS QQ N 290. – Gold: ISO 27874

Electrical

Model	Series	Types	Test voltage (kV rms)[1] Contact-contact	Test voltage (kV rms)[1] Contact-shell	Rated current (A)[1]
EPG-XBG	**00**	302-303-304-305	1.00	1.00	2.0
EPG-EXG	**0B**	302	1.45	1.20	4.5
EPG-EXG	**0B**	303	1.70	1.60	4.5
EPG-EXG	**0B**	304	1.30	1.10	4.5
EPG-EXG	**0B**	305	1.25	1.20	4.5
EPG-EXG	**0B**	306	1.25	1.20	2.5
EPG-EXG	**0B**	307	1.00	1.00	2.0
EPG-EXG	**0B**	309	0.60	0.50	1.5
EPG-EXG	**1B**	302	1.70	1.45	4.5
EPG-EXG	**1B**	303	1.60	1.85	4.5
EPG-EXG	**1B**	304	1.70	1.80	4.5
EPG-EXG	**1B**	305	1.30	1.55	4.5
EPG-EXG	**1B**	306	1.35	1.45	4.5
EPG-EXG	**1B**	307	1.45	1.45	2.0
EPG-EXG	**1B**	308	1.30	1.30	2.0
EPG-EXG	**1B**	310	1.00	1.00	1.5
EPG	**1B**	314	1.00	1.30	1.0

Note:
[1] see calculation method, caution and suggested standard on page 190.

P18 PCB drilling pattern (page 165)

P19 PCB drilling pattern (page 165)

Print contacts

Print contacts are available in straight or elbow versions for certain connector types, mostly for straight and elbow socket models. Connection is made on flexible or rigid printed circuits by soldering.
Straight print contacts are gold-plated which guarantees optimum soldering, even after long-term storage. However for wave soldering, we recommend removal the gold-plating from the contact end on the printed circuit side before soldering according to the assembly procedures.
Print elbow contacts include a tinned lead free brass wire crimped into a crimp contact.

straight

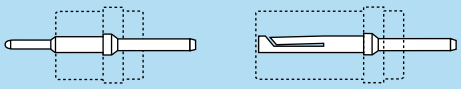

elbow

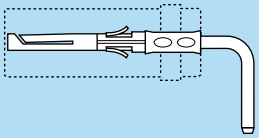

Test voltage

Test voltage (Ue) :
(measured according to the IEC 60512-2 test 4a standard)

It corresponds to 75% of the mean breakdown voltage.
Test voltage is applied at 500 V/s and the test duration is 1 minute.

This test has been carried out with a mated plug and socket, with power supply only on the plug end.

The operating voltage value definition is at the entire responsibility of the customer who defines this value according to the safety factors that they apply to their equipment and system.

Caution:
For a number of applications, safety requirements for electrical appliances are more severe with regard to operating voltage.
In such cases operating voltage is defined according to creepage distance and air clearance) between live parts.
Please consult us for the choice of a connector by indicating the safety standard to be met by the product.

Voltage values are given in the table on insulator types for each series.
They correspond with values measured at sea level. They are adapted to all applications up to an altitude of 2000 m.

In case a device is used at a higher altitude, air clearance between live parts has to be multiplied by the following coefficients.
It means also that test voltage has to be divided by this coefficient.

altitude (m)	coefficient
2000	1.00
3000	1.14
4000	1.29
5000	1.48

Rated current

(measured according to IEC 60512-3 test 5a)

The specified rated current can be applied simultaneously to all the contacts.
It corresponds with an average temperature rise of 40°C of the connector.

The current values are indicated in the table of insulator types in each series.
For use at higher temperatures acceptable rated current will be lower. It tends towards zero as the material is used at the maximum operating temperature accepted for the insulator.

In most case the current depend on the conductor dimension (see table on page 196) or on the printed circuit dimension.

Caution:
In general, connectors should not be unmated while live.

For connectors with PEEK insulator, maximum admissible current will follow the curve below depending on the operating temperature T.

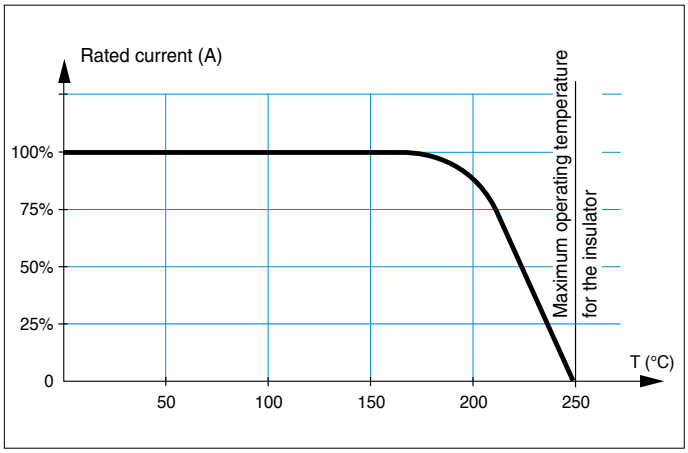

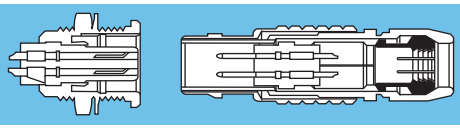

Cable fixing

Cables are fixed into LEMO connectors with cable collet systems. These collets with latches have a design which is very similar to those used for tool machines. This solution guarantees excellent cable retention and ensures perfectly symmetrical deformation of the cable.
The 00 multipole series is also available with hexagonal crimping (MIL-C-22520F).

Material and treatment

Component	Material (standard)	Surface treatment (µm)				
		Nickel[1]		Gold		
		Cu	Ni	Cu	Ni	Au
Center piece	Brass (UNS C 38500)	0.5	3	–	–	–
Collet	Brass (UNS C 38500)	0.5	3	–	–	–
Crimp ferrule	Copper (UNS C 18700)	0.5	3	0.5	3	0.5
Reducer	Brass (UNS C 38500)	0.5	3	–	–	–
Reducing cone	Brass (UNS C 38500)	0.5	3	–	–	–
Earthing cone	Brass (UNS C 38500)	0.5	3	–	–	–
Metal washer	Brass (UNS C 38500)	0.5	3	–	–	–
Gasket	Silicone MQ/MVQ	–				
	FPM (Viton®)[2]	–				

Notes:
1) standards for surface treatment are as follows:
– nickel-plated: SAE AMS QQ N 290.
2) available upon special request.

Cable clamping system

B series (D and M cable clamping)

See assembly instructions under www.lemo.com.

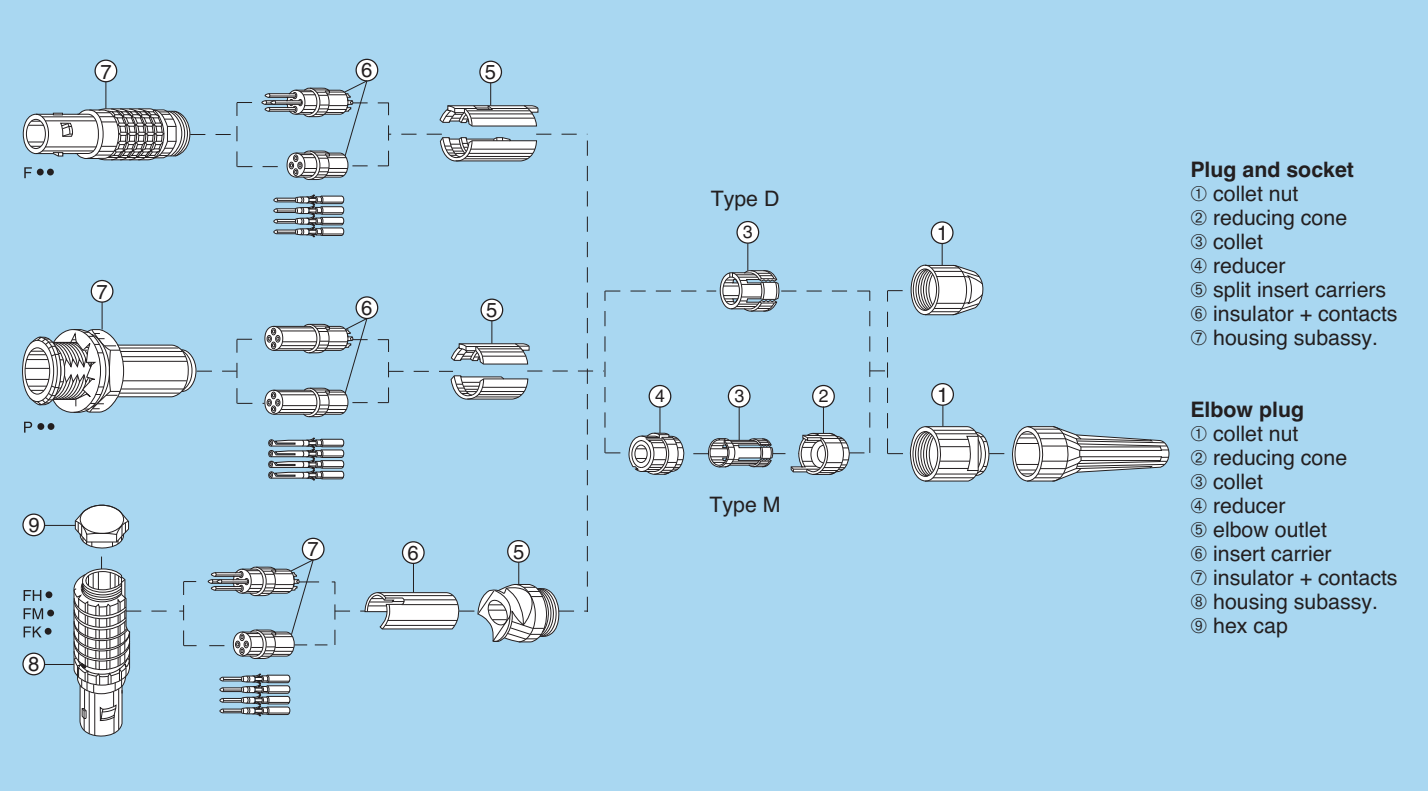

K series (C and K cable clamping)

See assembly instructions under www.lemo.com.

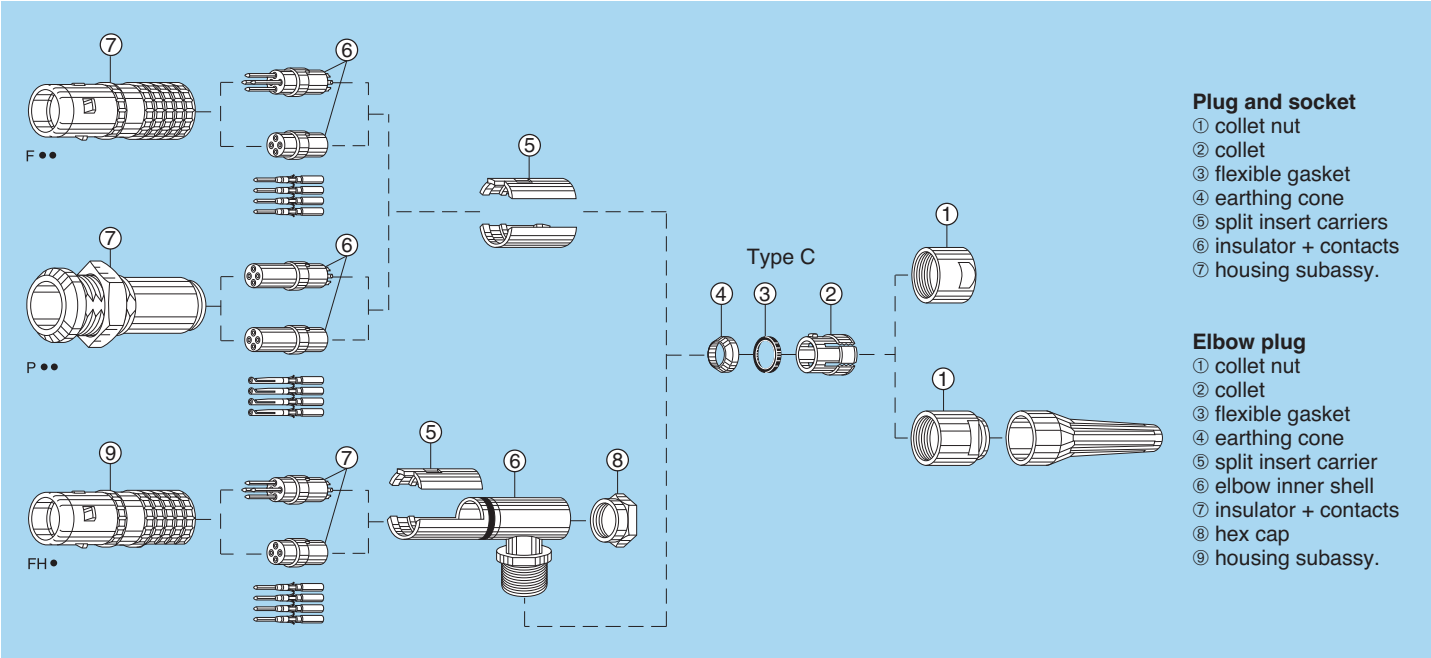

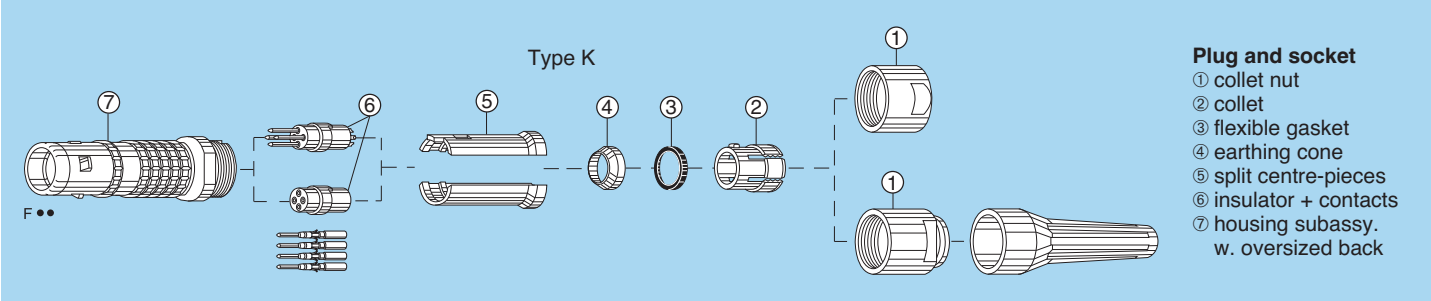

T series (C cable clamping)

See assembly instructions under www.lemo.com.

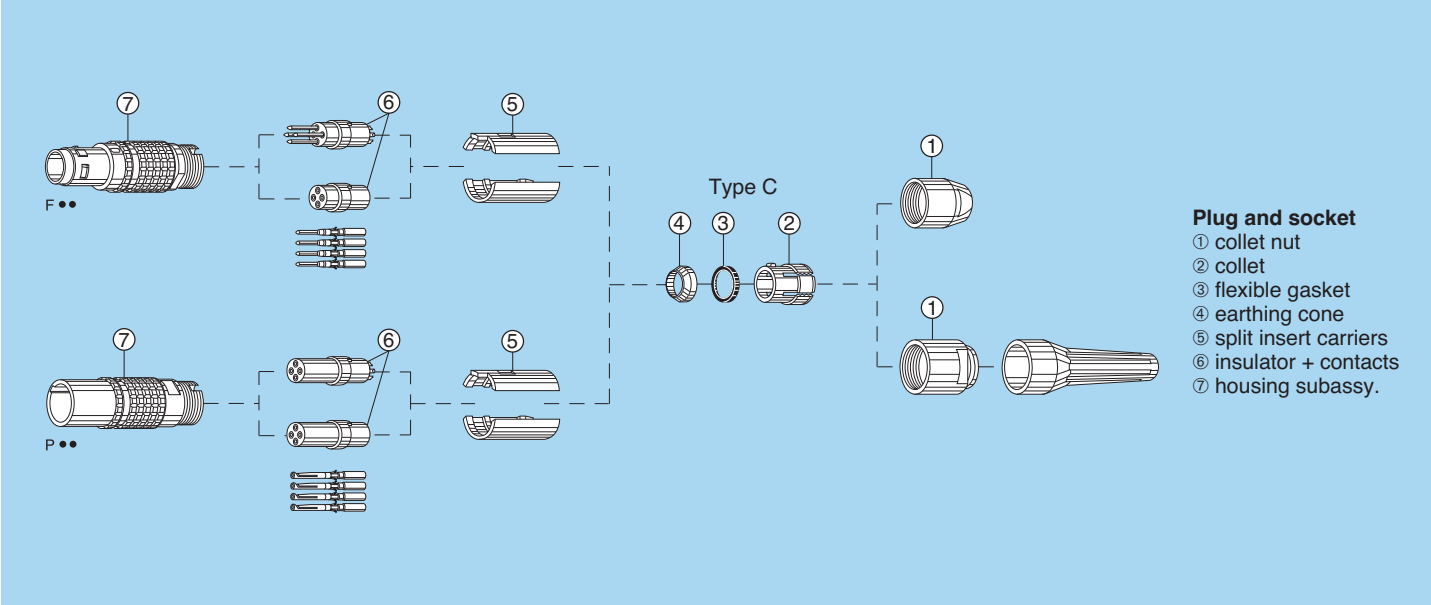

S series (C, L and K cable clamping)

See assembly instructions under www.lemo.com.

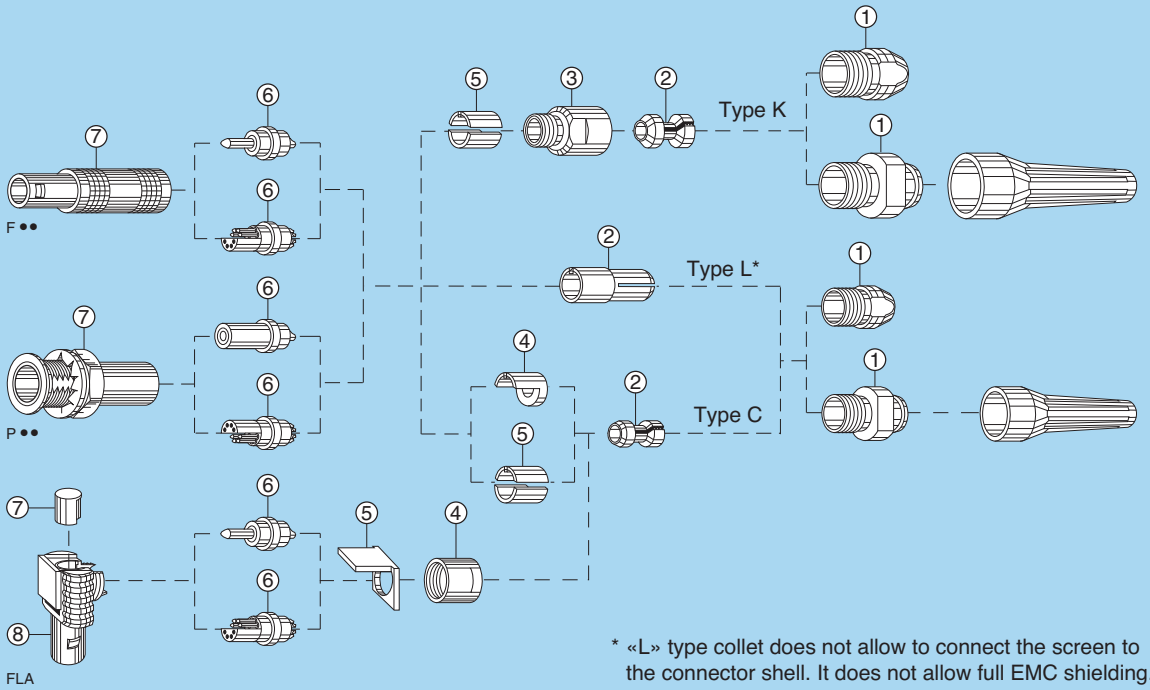

Plug and socket
① collet nut
② collet
③ oversize collet housing (type K)
④ earthing centre-piece (type C)
⑤ split centre-pieces (type K and C)
⑥ insulator + contacts
⑦ housing subassy.

Elbow plug
① collet nut
② collet
④ threaded sleeve
⑤ bracket
⑥ insulator + contacts
⑦ insulating sleeve
⑧ housing subassy.

* «L» type collet does not allow to connect the screen to the connector shell. It does not allow full EMC shielding.

E series (C and K cable clamping)

See assembly instructions under www.lemo.com.

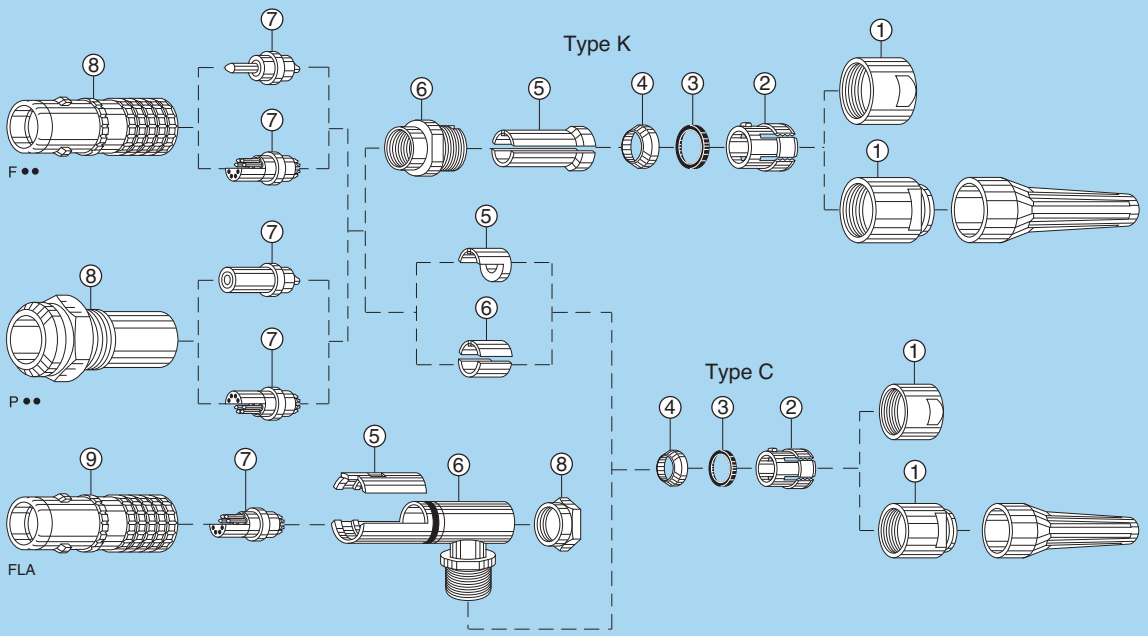

Plug and socket
① collet nut
② collet
③ flexible gasket
④ earthing cone
⑤ split centre-pieces (type K)
⑤ earthing centre-piece (type C)
⑥ oversize collet housing (type K)
⑥ earthing centre-piece (type C)
⑦ insulator + contacts
⑧ housing subassy.

Elbow plug
① collet nut
② collet
③ flexible gasket
④ earthing cone
⑤ split insert carrier
⑥ elbow inner shell
⑦ insulator + contacts
⑧ hex cap
⑨ housing subassy.

Maximum metal collet nut tightening torque

Standard series

	Series							
	00	0S	1S	2S	3S	4S	5S	6S
Torque (Nm)	0.25	0.5	1.5	2.5	3	8	10	12

Watertight series

	Series						
	0E	1E	2E	3E	4E	5E	6E
Torque (Nm)	0.7	0.8	2	3	5	8	12

Keyed series

	Series							
	00	0B	1B	XB	2B	3B	4B	5B
Torque (Nm)	0.25	0.5	1.5	2.0	2.5	4	7	10

Watertight keyed series

	Series										
	TT	0K	0T	1K	1T	2K	2T	3K	3T	4K	5K
Torque (Nm)	0.25	0.7	0.7	0.8	0.8	2	2	3	3	5	8

Maximum elbow plug hex cap tightening torque

Keyed series

	Series						
	00	0B	1B	2B	3B	4B	5B
Torque (Nm)	0.2	0.25	0.5	0.5	1.5	3	5

Watertight series

	Series					
	0E	1E	2E	3E	4E	5E
Torque (Nm)	0.8	1	1.2	1.5	3	5

Watertight keyed series

	Series					
	0K	1K	2K	3K	4K	5K
Torque (Nm)	0.8	1	1.2	1.5	3	5

1N = 0.102 kg

Maximum plastic collet nut tightening torque [1)]

	Series								
	00	0S	1S	2S	3S	1B	2B	3B	4B
Torque (Nm)	0.15	0.45	0.50	0.50	1.00	0.50	0.50	1.00	1.50

Note:
[1)] For applications subject to strong vibration, we recommend fixing the collet nut with epoxy resin. We recommend to tight to the maximum value. Optimal torque may depend on cable jacket design.

Technical tables

Table of American Wire Gauge

AWG	Construction		ø wire max		Wire section	
	Strand nb	AWG/ strand	(mm)	(in)	(mm^2)	(sq in)
0	259	24	11.277	0.444	52.90	0.0820
1	817	30	9.702	0.382	41.40	0.0641
2	259	26	8.89	0.35	33.20	0.0514
4	133	25	6.9596	0.274	21.5925	0.0335
6	133	27	5.5118	0.217	13.5885	0.0211
8	168	30	4.4450	0.175	8.5127	0.0132
8	133	29	4.3942	0.173	8.6053	0.0133
10	105	30	3.3020	0.13	5.3204	0.0082
10	37	26	2.9210	0.115	4.7397	0.0073
10	1	10	2.6162	0.103	5.2614	0.0082
12	37	28	2.3114	0.091	2.9765	0.0046
12	19	25	2.3622	0.093	3.0847	0.0048
12 [1)]	7	20	2.5400	0.10	3.6321	0.0056
12	1	12	2.0828	0.082	3.3081	0.0051
14	41	30	2.0574	0.081	2.0775	0.0032
14	19	27	1.8542	0.073	1.9413	0.0030
14 [1)]	7	22	2.0828	0.082	2.2704	0.0035
14	1	14	1.6510	0.065	2.0820	0.0032
16 [1)]	65	34	1.5748	0.062	1.3072	0.0020
16	26	30	1.5748	0.062	1.3174	0.0020
16	19	29	1.4986	0.059	1.2293	0.0019
16 [1)]	7	24	1.5494	0.061	1.4330	0.0022
16	1	16	1.3208	0.052	1.3076	0.0020
18 [1)]	65	36	1.2700	0.05	0.8234	0.0013
18 [1)]	42	34	1.2700	0.05	0.8447	0.0013
18	19	30	1.3208	0.052	0.9627	0.0015
18	16	30	1.2954	0.051	0.8107	0.0013
18	7	26	1.2700	0.05	0.8967	0.0014
18	1	18	1.0414	0.041	0.8229	0.0013

AWG	Construction		ø wire max		Wire section	
	Strand nb	AWG/ strand	(mm)	(in)	(mm^2)	(sq in)
20 [1)]	42	36	1.0160	0.04	0.5320	$8.2x10^{-4}$
20	19	32	1.0414	0.041	0.6162	0.0010
20	10	30	1.0160	0.04	0.5067	$7.9x10^{-4}$
20	7	28	0.9906	0.039	0.5631	$8.7x10^{-4}$
20	1	20	0.8382	0.033	0.5189	$8.0x10^{-4}$
22	19	34	0.8382	0.033	0.3821	$5.9x10^{-4}$
22	7	30	0.7874	0.031	0.3547	$5.5x10^{-4}$
22	1	22	0.6604	0.026	0.3243	$5.0x10^{-4}$
24 [1)]	42	40	0.6604	0.026	0.2045	$3.2x10^{-4}$
24	19	36	0.6858	0.027	0.2407	$3.7x10^{-4}$
24	7	32	0.6350	0.025	0.2270	$3.5x10^{-4}$
24	1	24	0.5588	0.022	0.2047	$3.2x10^{-4}$
26	19	38	0.5588	0.022	0.1540	$2.4x10^{-4}$
26	7	34	0.5080	0.02	0.1408	$2.2x10^{-4}$
26	1	26	0.4318	0.017	0.1281	$2.0x10^{-4}$
28 [1)]	19	40	0.4318	0.017	0.0925	$1.4x10^{-4}$
28	7	36	0.4064	0.016	0.0887	$1.4x10^{-4}$
28	1	28	0.3302	0.013	0.0804	$1.2x10^{-4}$
30	7	38	0.3302	0.013	0.0568	$8.8x10^{-5}$
30	1	30	0.2794	0.011	0.0507	$7.9x10^{-5}$
32	7	40	0.2794	0.011	0.0341	$5.3x10^{-5}$
32	1	32	0.2286	0.009	0.0324	$5.0x10^{-5}$
34	1	34	0.1693	0.007	0.0201	$3.1x10^{-5}$
36	1	36	0.127	0.005	0.0127	$2.0x10^{-5}$
38	1	38	0.1016	0.004	0.0081	$1.3x10^{-5}$
40	1	40	0.078	0.003	0.0049	$7.5x10^{-6}$

Note: [1)] not included in the standard

Table of wire gauges according to IEC-60228 standard

Conductor no x Ø (mm)	Max Ø (mm)	Max Ø (in)	Section (mm^2)	Section (sq in)
196x0.40	7.50	0.295	25.00	0.0387
7x2.14	6.10	0.240	25.00	0.0387
125x0.40	6.00	0.236	16.00	0.0248
7x1.72	4.90	0.192	16.00	0.0248
1x4.50	4.50	0.177	16.00	0.0248
80x0.40	4.70	0.155	10.00	0.0155
7x1.38	3.95	0.155	10.00	0.0155
1x3.60	3.60	0.141	10.00	0.0155
84x0.30	3.70	0.145	6.00	0.0093
7x1.50	3.15	0.124	6.00	0.0093
1x2.76	2.76	0.108	6.00	0.0093
56x0.30	2.80	0.110	4.00	0.0062
7x0.86	2.58	0.098	4.00	0.0062
1x2.25	2.25	0.082	4.00	0.0062
50x0.25	2.15	0.084	2.50	0.0038
7x0.68	2.04	0.080	2.50	0.0038
1x1.78	1.78	0.070	2.50	0.0038
30x0.25	1.60	0.062	1.50	0.0023
7x0.52	1.56	0.061	1.50	0.0023

Conductor no x Ø (mm)	Max Ø (mm)	Max Ø (in)	Section (mm^2)	Section (sq in)
1x1.40	1.40	0.055	1.50	0.0023
32x0.20	1.35	0.053	1.00	0.0015
7x0.43	1.29	0.050	1.00	0.0015
1x1.15	1.15	0.045	1.00	0.0015
42x0.15	1.20	0.047	0.75	0.0011
28x0.20	1.15	0.045	0.75	0.0011
1x1.00	1.00	0.039	0.75	0.0011
28x0.15	0.95	0.037	0.50	$7.7x10^{-4}$
16x0.20	0.90	0.035	0.50	$7.7x10^{-4}$
1x0.80	0.80	0.031	0.50	$7.7x10^{-4}$
7x0.25	0.75	0.029	0.34	$5.2x10^{-4}$
1x0.60	0.60	0.023	0.28	$4.3x10^{-4}$
14x0.15	0.75	0.029	0.25	$3.8x10^{-4}$
7x0.20	0.65	0.023	0.22	$3.4x10^{-4}$
18x0.10	0.50	0.019	0.14	$2.1x10^{-4}$
14x0.10	0.40	0.015	0.11	$1.7x10^{-4}$
21x0.07	0.40	0.015	0.09	$1.3x10^{-4}$
14x0.10	0.40	0.015	0.09	$1.3x10^{-4}$

Maximum current rating for conductor

Maximum current on insulated conductors up to an ambiant temperature of 30° C (from VDE 0100, parts 430 and 532 as well as other VDE regulations).

Nominal section mm^2	Group 2 Intens. max. A	Group 3 Intens. max. A
0.08	1.0	1.5
0.14	2.0	3.0
0.25	4.0	5.0
0.34	6.0	8.0
0.50	9.0	12.0
0.75	12.0	15.0
1.00	15.0	19.0
1.50	18.0	24.0
2.50	26.0	32.0

Group 2 Multi-conductor, e. g. solid cable under sheath, shielded cable, lead-sheath cables, …
Group 3 Single conductor and single conductor cable laid on open air in a way to leave at least a space between them equal to their diameter

Some formulae

Resistance R of a conductor: $R = \rho \bullet \frac{l}{A}$ [Ω]

Where: ρ = conductor resistivity
l = conductor length
A = conductor cross-section

Impedance of coaxial line: $Z = \frac{138}{\sqrt{\varepsilon_r}} \bullet \log \frac{D}{d}$ [Ω]

ε_r = dielectric constant
D = dielectric outer diameter
d = center conductor outer diameter

Signal attenuation: Attenuation $= 20 \bullet \log \frac{U_1}{U_2}$ [dB]

U_1 = input signal voltage
U_2 = output signal voltage

Conversion of some units:

millimeters into inches:	1 mm	= 0.0394 in
inches into millimeters:	1 in	= 25.4 mm
centimeters into feet:	1 cm	= 0.0328 ft
feet (12 in) into centimeters:	1 ft	= 30.48 cm
square centimeters into square inches:	1 cm^2	= 0.155 sq in
square inches into square centimeters:	1 sq in	= 6.4516 cm^2
bar into pounds per square inch:	1 bar	= 14.51 psi
bar into Pascal:	1 bar	= 10^5 Pa
°C into °F:	°F	= °C•1.8 + 32
newtonmeter (Nm) into inch pound (in•lb)	1 Nm	= 8.85 in•lb
mbar•l•s^{-1} into Torr•l•s^{-1}	1 mbar•l•s^{-1}	= 1.33 Torr•l•s^{-1}

Product safety notice

PLEASE READ AND FOLLOW ALL INSTRUCTIONS CAREFULLY AND CONSULT ALL RELEVENT NATIONAL AND INTERNATIONAL SAFETY REGULATIONS FOR YOUR APPLICATION.
IMPROPER HANDLING, CABLE ASSEMBLY, OR WRONG USE OF CONNECTORS CAN RESULT IN HAZARDOUS SITUATIONS.

1. **SHOCK AND FIRE HAZARD**
   Incorrect wiring, the use of damaged components, presence of foreign objects (such as metal debris), and / or residue (such as cleaning fluids), can result in short circuits, overheating, and / or risk of electric shock.
   Mated components should never be disconnected while live as this may result in an exposed electric arc and local overheating, resulting in possible damage to components.

2. **HANDLING**
   Connectors and their components should be visually inspected for damage prior to installation and assembly. Suspect components should be rejected or returned to the factory for verification.
   Connector assembly and installation should only be carried out by properly trained personnel. Proper tools must be used during installation and / or assembly in order to obtain safe and reliable performance.

3. **USE**
   Connectors with exposed contacts should never be live (or on the current supply side of a circuit). Under general conditions voltages above 30 VAC and 42 VDC are considered hazardous and proper measures should be taken to eliminate all risk of transmission of such voltages to any exposed metal part of the connector.

4. **TEST AND OPERATING VOLTAGES**
   The maximum admissible operating voltage depends upon the national or international standards in force for the application in question. Air and creepage distances impact the operating voltage; reference values are indicated in the catalogue however these may be influenced by PC board design and / or wiring harnesses.
   The test voltage indicated in the catalogue is 75% of the mean breakdown voltage; the test is applied at 500 V/s and the test duration is 1 minute.

5. **CE MARKING CE**
   CE marking CE means that the appliance or equipment bearing it complies with the protection requirements of one or several European safety directives.
   CE marking CE applies to complete products or equipment, **but not to electromechanical components, such as connectors**.

6. **PRODUCT IMPROVEMENTS**
   The LEMO Group reserves the right to modify and improve to our products or specifications without providing prior notification.

7. **⚠ WARNING (Prop 65 State of California)**
   Proposition 65 requires businesses to provide warnings to Californians about significant exposures to chemicals that cause cancer, birth defects or other reproductive harm. LEMO products are exempt from proposition 65 warnings because they are manufactured, marketed, and sold solely for commercial and industrial use. For further information, please visit https://www.lemo.com/quality/LEMO-Prop-65-compliance-declaration.pdf.

Disclaimers

LEMO works constantly to improve the quality of its products; the information and illustrations figuring in this document may therefore vary and are not binding. In any case, LEMO makes no specific warranty of merchantability, fitness for a particular purpose, third party components as such or included in assembly, non-infringement, title, accuracy, completeness, or security. The user is fully responsible for his products and applications using LEMO component.

In no event shall LEMO, its affiliates, officers, agents or employees be liable for any incidental, indirect, special or consequential damages in connection with the products or services provided by LEMO, including (without limitation) loss of profits or revenues, interruption of business, loss of use of the products or any associated equipment, materials, components or products, damages to associated equipment or in combination with other components, materials.

Reproduction of significant portions of LEMO information in LEMO data books or data sheets is permissible only if reproduction is without alteration and is accompanied by all associated warranties, conditions, limitations, and notices. LEMO is not responsible or liable for such altered documentation. Information of third parties may be subject to additional restrictions.

Notes

LEMO complete product range

	B	S	K	T	E	F	00	01	0A	3T	4A	4M	3K.93C	1D	Y	05	5G	2G 2C	L	H	M	R	N	03	V	W	T7	P	SP	D	K/S	01	DIN
Unipole		●			●																												
Multipole	●	●	●	●	●																												
Coaxial 50 Ω																																	
Coaxial 75 Ω																																	
Multi Coaxial																																	
Hybrid Coax + LV																																	
Triaxial 50 Ω																																	
Triaxial 75 Ω																																	
Hybrid Triax + LV																																	
Quadrax																																	
High Voltage																																	
Multi High Voltage																																	
Hybrid HV + LV																																	
Fibre Optic																																	
Multi Fibre Optic																																	
Hybrid FO + LV																																	
Thermocouple																																	
Fluidic																																	
Multi Fluidic																																	
Hybrid Fluidic + LV																																	

Most frequently used in darker colour

● included in this catalogue

B Series Keyed

S Series

K Series Keyed

T Series

E Series

F Series Keyed

00 Series

01 Series

0A Series

3T Series

4A Series

4M Series Keyed

3K.93C Series Keyed

1D Series

Y Series

05 Series

5G Series Keyed

2G Series Keyed

2C Series

L Series Keyed

H Series

M Series Keyed

R Series Keyed

N Series Keyed

03 Series Keyed

V Series

W Series Keyed

Cable assembly

REDEL T7 Series

REDEL P Series Keyed

REDEL SP Series Keyed

REDEL D Series

01 Series Keyed

VAA Series

TAA Series

No reproduction or use without express permission of editorial or pictorial content, in any manner.
LEMO SA reserves the right to modify and improve specifications, at all times, without any notification.

LEMO HEADQUARTERS

SWITZERLAND
LEMO SA
Chemin des Champs-Courbes 28 - P.O. Box 194 - CH-1024 Ecublens
Tel. +41 21 695 16 00 - e-mail: info@lemo.com

LEMO SUBSIDIARIES

AUSTRIA
LEMO Elektronik GesmbH
Lemböckgasse 49/E6-3
1230 Wien
Tel: +43 1 914 23 20 0
Fax:+43 1 914 23 20 11
salesAT@lemo.com

BRAZIL
LEMO Latin America Ltda
Av. Dr. Adhemar de Barros,
566 – Sala 1407, Vila Adyana
CEP: 12245-011
São José dos Campos - SP - Brazil
Tel: +55 11 94242 4293
info-la@lemo.com

CANADA
LEMO Canada Inc
44 East Beaver Creek Road, unit 20
Richmond Hill, Ontario L4B 1G8
Tel: +1 905 889 56 78
Fax: +1 905 889 49 70
info-canada@lemo.com

CHINA / HONG KONG
LEMO Electronics (Shanghai) Co., Ltd
First Floor, Block E,
18 Jindian Road, Pudong
Shanghai, China, 201206
Tel: +86 21 5899 7721
Fax: +86 21 5899 7727
cn.sales@lemo.com

DENMARK
LEMO Denmark A/S
Mandal Allé 16A
5500 Middelfart
Tel: +45 45 20 44 00
Fax: +45 45 20 44 01
info-dk@lemo.com

FRANCE
LEMO France Sàrl
24/28 Avenue Graham Bell
Bâtiment Balthus 4
Bussy Saint Georges
77607 Marne la Vallée Cedex 3
Tel: +33 1 60 94 60 94
Fax: +33 1 60 94 60 90
info-fr@lemo.com

GERMANY
LEMO Elektronik GmbH
Hanns-Schwindt-Str. 6
81829 München
Tel: +49 89 42 77 03
Fax: +49 89 420 21 92
infoDE@lemo.com

HUNGARY
REDEL Elektronika Kft
Nagysándor József u. 6-12
1201 Budapest
Tel: +36 1 421 47 10
Fax: +36 1 421 47 57
info-hu@lemo.com

INDIA
LEMO India Private Ltd
Sixth floor, Sunrise Tower, C-10 Central
Road Marol MIDC Andheri East,
Mumbai, Mumbai Suburban,
Maharashtra, 400093
Tel: +91 22 69380203
info-india@lemo.com

ITALY
LEMO Italia srl
Viale Lunigiana 25
20125 Milano
Tel: +39 02 66 71 10 46
Fax: +39 02 37 90 80 46
sales.it@lemo.com

JAPAN
LEMO Japan Ltd
2-7-22, Mita,
Minato-ku, Tokyo, 108-0073
Tel: +81 3 54 46 55 10
Fax: +81 3 54 46 55 11
info-jp@lemo.com

NETHERLANDS / BELGIUM
LEMO Connectors Nederland B.V.
Jacques Meuwissenweg 6
2031 AD Haarlem
Tel. +31 23 206 07 01
info-nl@lemo.com

NORWAY / ICELAND
LEMO Norway A/S
Soerumsandvegen 69,
1920 Soerumsand
Tel: +47 22 91 70 40
Fax: +47 22 91 70 41
info-no@lemo.com

SINGAPORE
LEMO Asia Pte Ltd
4 Leng Kee Road,
#06-09 SiS Building
Singapore 159088
Tel: +65 6476 0672
Fax: +65 6474 0672
sg.sales@lemo.com

SPAIN / PORTUGAL
IBERLEMO SAU
Brasil, 45, 08402 Granollers
Barcelona
Tel: +34 93 860 44 20
Fax: +34 93 879 10 77
info-es@lemo.com

SWEDEN / FINLAND
LEMO Nordic AB
Gunnebogatan 30
163 53 Spånga
Tel: +46 8 635 60 60
Fax: +46 8 635 60 61
info-se@lemo.com

SWITZERLAND
LEMO Verkauf AG
Grundstrasse 22 B,
6343 Rotkreuz
Tel: +41 41 790 49 40
ch.sales@lemo.com

TAIWAN
TAOYUAN TAIWAN
Tel: +886 967 132 824
speng@lemo.com

UNITED ARAB EMIRATES
LEMO Middle East Connectors LLC
Concorde Tower 11th Floor,
Office 1102, Dubai Media City,
P.O. Box 449849
Dubai, United Arab Emirates
Tel: +971 4 568 1904
info-me@lemo.com

UNITED KINGDOM
LEMO UK Ltd
12-20 North Street, Worthing,
West Sussex, BN11 1DU
Tel: +44 1903 23 45 43
lemouk@lemo.com

USA
LEMO USA Inc
P.O. Box 2408
Rohnert Park, CA 94927-2408
Tel: +1 707 578 88 11
+1 800 444 53 66
Fax: +1 707 578 08 69
info-US@lemo.com

CAT.UM.LEN.P1217, © LEMO / Data subject to change, printed in Switzerland, pdf updated July 2024

LEMO DISTRIBUTORS

ARGENTINA, AUSTRALIA, BRAZIL, CHILE, COLOMBIA, CZECH REPUBLIC, GREECE, ISRAEL, NEW ZEALAND, PERU, POLAND, SOUTH AFRICA, SOUTH KOREA, TURKEY, UKRAINE

www.lemo.com