REV	DESCRIPTION	DESIGN	APPROVAL	DATE
A0	NEW VERSION	COLINYE	JERRY	2023/12/07

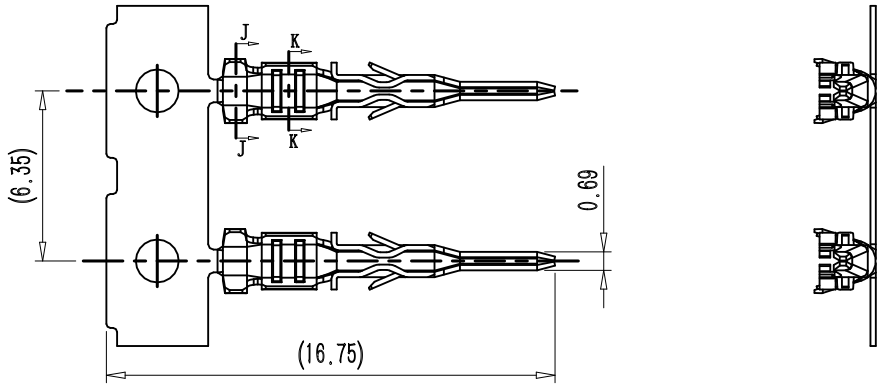

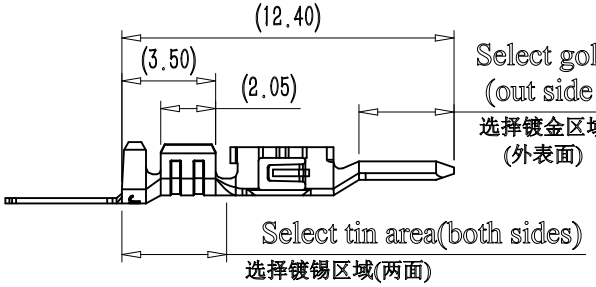

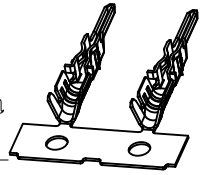

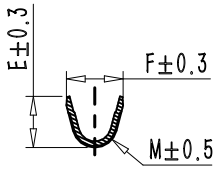

Section K-K
截面 K-K

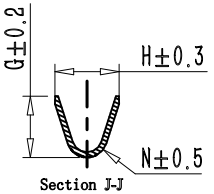

Section J-J
截面 J-J

NOTES:
(技术要求):

1.Material(材质):Phosphor bronze alloy(磷青铜)
2.Plating(表面处理):
A: Tin :40u"Min, over 50u"Min nickel
镀锡40u"Min, 镍底50u"Min;
B:Select gold 15u"Min, Select tin 100u"Min, over 50u"Min nickel
镀金15u"Min; 镀锡区100u"Min; 镍底50u"Min;
C:Select gold 30u"Min, Select tin 100u"Min, over 50u"Min nickel
镀金30u"Min; 镀锡区100"Min; 镍底50u"Min;
3.Wire size range(线规): See table(见表);
4.Contact surface should not have burrs,Other areas burr 0.1mm Max.
端子接触面不能有毛刺，其他区域毛刺不能超过0.1mm;
5.Harmful material please follow RoHS/产品符合RoHS标准;
6.Order Information(编码原则):
922-063-X 01 X
Wire size（线径）:
1:20~24AWG; 2:26~30AWG;
3:18AWG(0.75mm²)
Plating（电镀）:5:gold(镀金）; 1/6:Tin（镀锡）

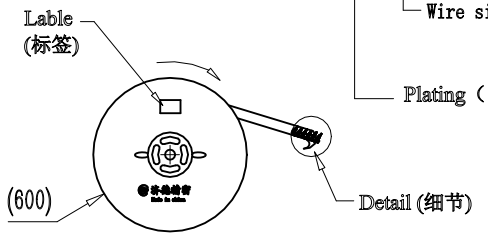

(Unwind direction)
出料方向

Termianl orientation

Terminales shown with crimps facing up
(端子铆压线夹向上)

Table(表格):

Part number (料号)	E	F	M	G	H	N	Plating (电镀)	Wire size (电线规格)	Insulation (绝缘外径)	pcs/reel (pcs/盘)
932-069-X009	2.18	2.39	0.74	2.29	2.54	0.76	"C"	18AWG OR 0.75mm2 (UL 1061 Wire)	1.85mm max	12K/R
932-069-X008							"B"			
932-069-X007							"A"			
932-069-X006	1.47	1.65	0.51	1.91	2.10	0.64	"C"	26~30AWG	1.27mm max	
932-069-X005							"B"			
932-069-X002							"A"			
932-069-X004	1.91	2.08	0.64	2.29	2.54	0.76	"C"	20~24AWG	1.85mm max	
932-069-X003							"B"			
932-069-X001							"A"			

X.± 0.35	X.° ± 3°
.X± 0.25	.X° ± 1°
.XX± 0.1	.XX° ± /
.XXX± 0.05	.XXX° ± /
UNITS:	mm

The information in this document is property of JiDC company and should not be copied or reproduced in any other way, without written permission.

Guangdong JiDe Precision Electronics Co., Ltd
广东济德精密电子有限公司

TITLE: 3.0 Male Termianl	PART NO. 932-069-X0XX
APPD:	DWG NO: C-932-069-X0XX
CHKD:	SCALE N/A / SHEET 1/1 / REV. A0
DRAW:	