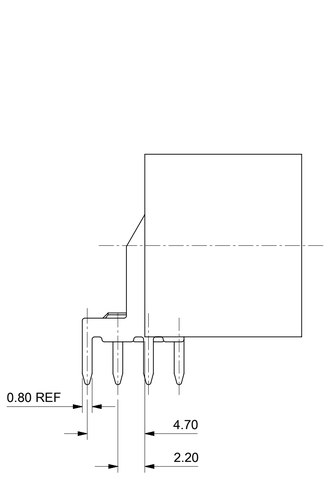

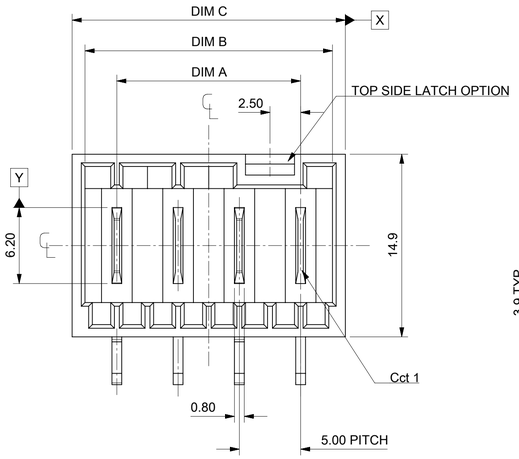

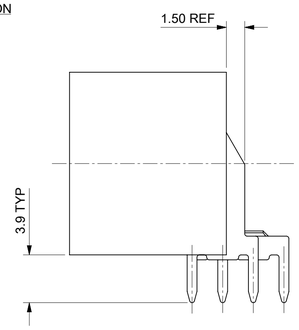

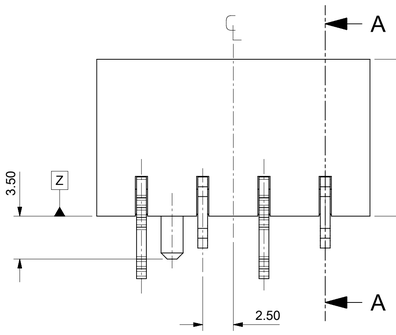

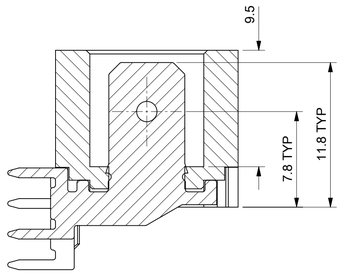

SECTION A-A

HOLES ON SOME
TOOLED VERSIONS

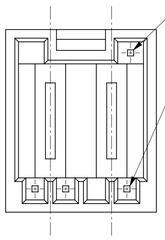

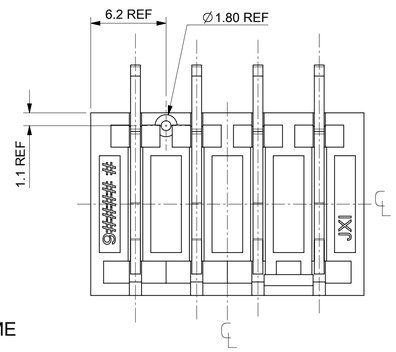

NOTES:
1. MATERIAL:
   HOUSING: PA 66 , UL94 V-0 750°C GWT NO FLAME
   TERMINAL: BRASS 0.80REF. THICK
   PLATING: OPTIONAL (SEE CHARTS SHEETS 3-11)
      TIN PLATING OPTION : 3µm TIN OVER
      1.27µm NICKEL ALL AREAS.
   SELECTIVE SILVER
      CONTACT AREA : 2µm SILVER OVER 1.27µm
      NICKEL. ALL OTHER AREAS FLASH OF SILVER 0.10µm
2. PRODUCT CONFORMS TO SPECIFICATION PS-99020-0037/39
3. MATES WITH MOLEX 91338, 90833, 90835, 91777, 91778,
   91954, 92000 & 91779
4. PARTS PACKED IN TRAYS OPTION C SEE PK-90858-001 FOR PACKAGING INFORMATION
5. PLATED THRU HOLE
6. RECOMMENDED PCB THICKNESS: 1.5 mm REF

CCT	DIM A	DIM B	DIM C	TOL
2	5.00	10.20	12.30	+/-0.30
3	10.00	15.20	17.30	
4	15.00	20.20	22.30	
5	20.00	25.20	27.30	
6	25.00	30.20	32.30	
7	30.00	35.20	37.30	
8	35.00	40.20	42.30	
9	40.00	45.20	47.30	
10	45.00	50.20	52.30	
11	50.00	55.20	57.30	
12	55.00	60.20	62.30	

RECOMMENDED PCB LAYOUT

P.C.B. POLARISATION OPTION "A"

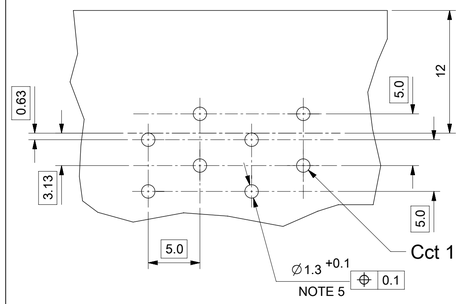

P.C.B.
OPTION "A"

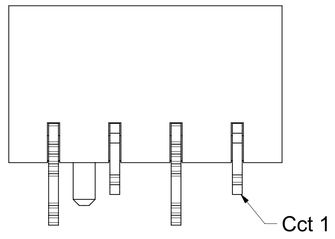

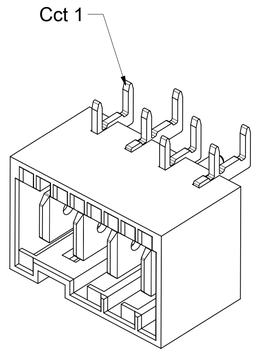

P.C.B. POLARISATION OPTION "B"
(FOR REVERSE FOOTPRINT)

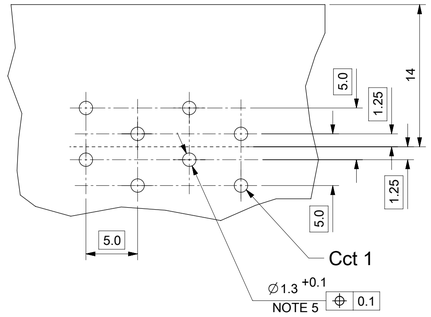

P.C.B.
OPTION "B"

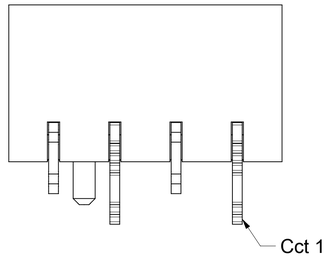

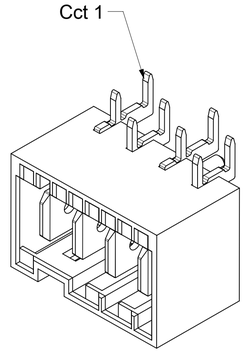

P.C.B. POLARISATION OPTION "C"
(STRAIGHT PINS)

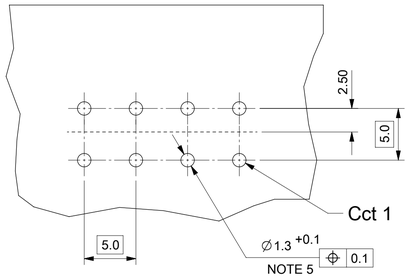

P.C.B.
OPTION "C"

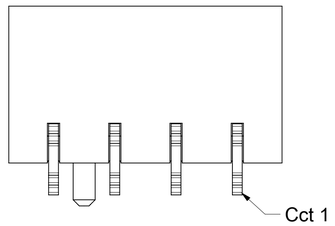

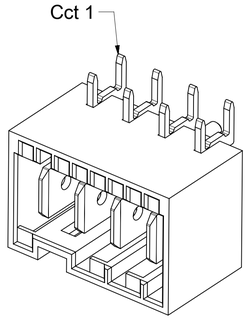

DOCUMENT STATUS	P1	RELEASE DATE	2023/05/12 09:50:23

FUNCTIONAL SYMBOLS: FA = 0, FC = 0, FP = 0
DIVISIONAL SYMBOLS

THIS DRAWING CONTAINS INFORMATION THAT IS PROPRIETARY TO MOLEX ELECTRONIC TECHNOLOGIES, LLC AND SHOULD NOT BE USED WITHOUT WRITTEN PERMISSION

DIMENSION UNITS	SCALE
mm	4:1

GENERAL TOLERANCES (UNLESS SPECIFIED)

ANGULAR TOL	±	2.0 °
4 PLACES	±	
3 PLACES	±	
2 PLACES	±	0.1
1 PLACE	±	0.2
0 PLACES	±	

DRAFT WHERE APPLICABLE MUST REMAIN WITHIN DIMENSIONS

CURRENT REV DESC:

EC NO: 749359
DRWN: RAHULH3 2023/05/12
CHK'D: RAHULH3 2023/05/12
APPR: MRAMAKRISHNA 2023/05/12

INITIAL REVISION:
DRWN: AKABADI 2017/09/08
APPR: BRUTTLE 2017/11/10

THIRD ANGLE PROJECTION | DRAWING: A1-SIZE | SERIES: 93003

molex

RAST 5 R.A. HDR PA 66 HOUSING

PRODUCT CUSTOMER DRAWING

DOCUMENT NUMBER	DOC TYPE	DOC PART	REVISION
930030001	PSD	000	B1

MATERIAL NUMBER	CUSTOMER	SHEET NUMBER
SEE SHEET 3-11	GENERAL MARKET	1 OF 11

NON-POTABLE HEADER, LOWER SIDE LATCH OPTION

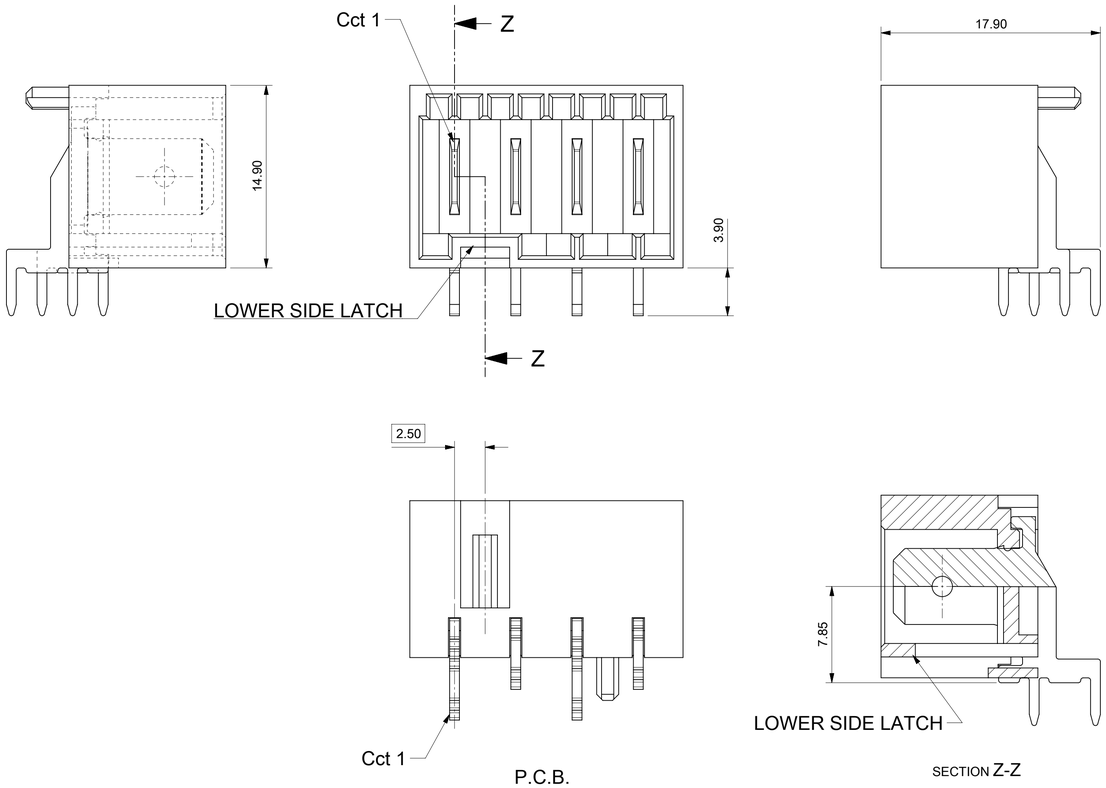

POTABLE HEADER OPTION WITH LOWER SIDE LATCH
P/N 93003-0070 - 2CCT ONLY
CONTACT ENGINEERING FOR LARGER CIRCUIT SIZES

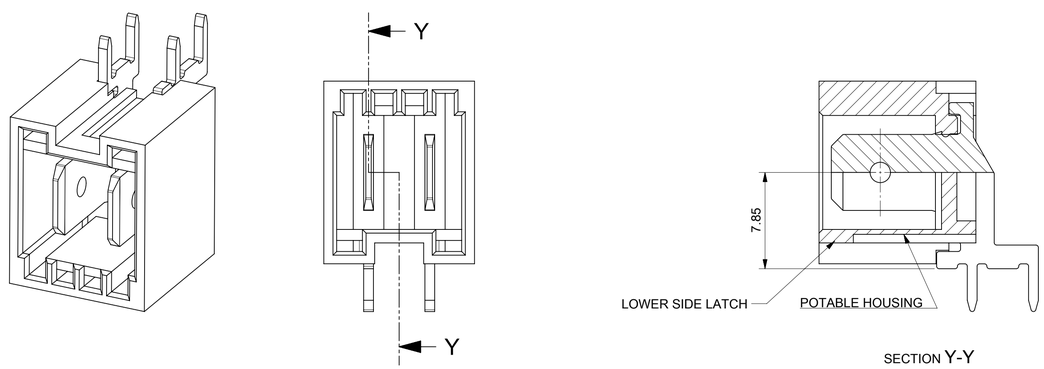

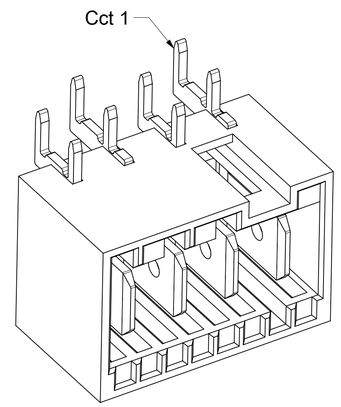

P.C.B.
OPTION "A"

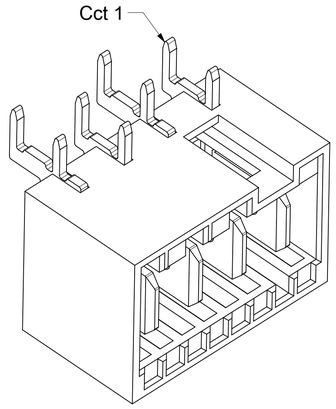

P.C.B.
OPTION "B"

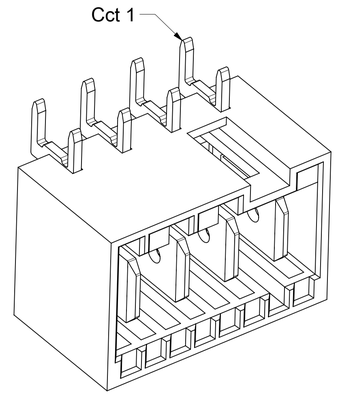

P.C.B.
OPTION "C"

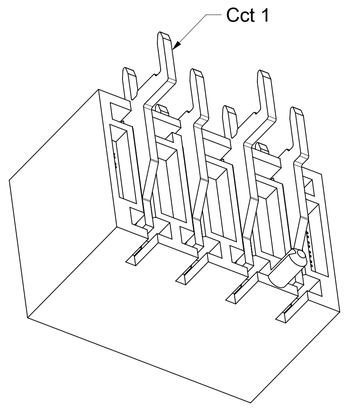

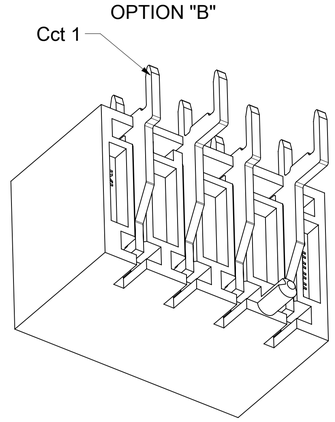

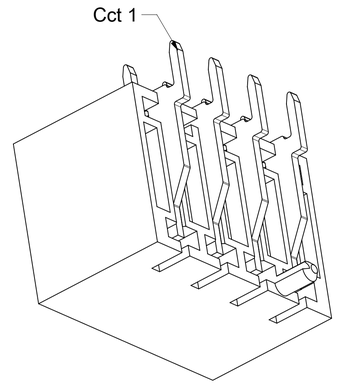

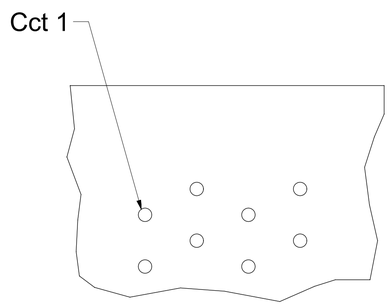

P.C.B. POLARISATION
OPTION "A"
PCB VIEW IS FROM
SOLDER SIDE

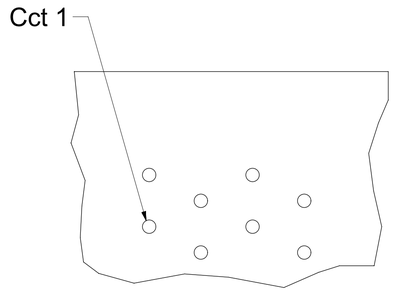

P.C.B. POLARISATION
OPTION "B"
PCB VIEW IS FROM
SOLDER SIDE

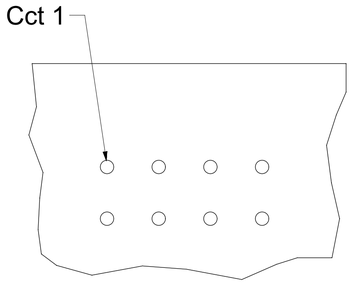

P.C.B. POLARISATION
OPTION "C"
PCB VIEW IS FROM
SOLDER SIDE

DOCUMENT STATUS	P1	RELEASE DATE	2023/05/12 09:50:23								

THIS DRAWING CONTAINS INFORMATION THAT IS PROPRIETARY TO MOLEX ELECTRONIC TECHNOLOGIES, LLC AND SHOULD NOT BE USED WITHOUT WRITTEN PERMISSION

FUNCTIONAL SYMBOLS: FA = 0, FC = 0, FP = 0
DIVISIONAL SYMBOLS

DIMENSION UNITS	SCALE
mm	4:1

GENERAL TOLERANCES (UNLESS SPECIFIED)

ANGULAR TOL	±	2.0 °
4 PLACES	±	
3 PLACES	±	
2 PLACES	±	0.1
1 PLACE	±	0.2
0 PLACES	±	

DRAFT WHERE APPLICABLE MUST REMAIN WITHIN DIMENSIONS

CURRENT REV DESC:
EC NO: 749359
DRWN: RAHULH3 2023/05/12
CHK'D: RAHULH3 2023/05/12
APPR: MRAMAKRISHNA 2023/05/12

INITIAL REVISION:
DRWN: AKABADI 2017/09/08
APPR: BRUTTLE 2017/11/10

THIRD ANGLE PROJECTION

molex

RAST 5 R.A. HDR PA 66 HOUSING

PRODUCT CUSTOMER DRAWING

DRAWING	SERIES	DOCUMENT NUMBER	DOC TYPE	DOC PART	REVISION
A1-SIZE	93003	930030001	PSD	000	B1

MATERIAL NUMBER	CUSTOMER	SHEET NUMBER
SEE SHEET 3-11	GENERAL MARKET	2 OF 11

2 CIRCUIT

SEE CODE DESIGNATION TABLE FOR NUMBERING FORMAT WHEN ADDING NEW PART NUMBERS

PART NO. (TIN)	TERM NO. (TIN)	MOLEX HOUSING NO.	TERMINAL VOID POSITION	UNBLOCKED POSITION KEYS	UNBLOCKED CODING KEYS	LATCH POSITION	CONFIGURATION (SEE NOTES)	LUMBERG K REF	TERM NO. (SILVER)	PART NO. (SILVER)	P.C.B. POLARISATION OPTION	TOP SIDE LATCH	POTABLE HOUSING
93003-0003	91703-0005/8	93002-0002	NONE	1b 2a	01c d20	1/2	1 2	K01	91703-0006/9	93003-0499	A	YES	NO
93003-0046	91703-0005/8	93002-0003	NONE	1a 2b	01c	1/2	1 2	K02	91703-0006/9	93003-0498	A	YES	
93003-0026	91703-0005/8	93002-0004	NONE	1b 2b	01c	1/2	1 2	K09	91703-0006/9	93003-0488	A	YES	
93003-0018	91703-0005/8	93002-0005	NONE	2a	01c d20	1/2	1 2	K03	91703-0006/9	93003-0495	A	YES	
93003-0021	91703-0005/8	93002-0006	NONE	1b	01c d20	1/2	1 2	K16	91703-0006/9	93003-0492	A	YES	
93003-0022	91703-0005/8	93002-0007	NONE	1a 2b	NONE	1/2	1 2	K06	91703-0006/9	93003-0491	A	YES	
93003-0019	91703-0005/8	93002-0008	NONE	1a 2b	d20	1/2	1 2	K05	91703-0006/9	93003-0478	A	YES	
93003-0058	91703-0005/8	93002-0009	NONE	2b	NONE	1/2	1 2	K11	91703-0006/9	93003-0476	A	YES	
93003-0029	91703-0005/8	93002-0010	NONE	1a 1b	d20	1/2	1 2	K13	91703-0006/9	93003-0486	A	YES	
93003-0030	91703-0005/8	93002-0011	NONE	2a 2b	NONE	1/2	1 2	K31	91703-0006/9	93003-0485	A	YES	
93003-0059	91703-0005/8	93002-0012	NONE	2b	d20	1/2	1 2	K38	91703-0006/9	93003-0475	A	YES	
93003-0060	91703-0005/8	93002-0013	NONE	1a 2a	01c d20	1/2	1 2	K44	91703-0006/9	93003-0474	A	YES	
93003-0061	91703-0005/8	93002-0014	NONE	1a 1b	NONE	1/2	1 2	K40	91703-0006/9	93003-0473	A	YES	
93003-0020	91703-0005/8	93002-0015	NONE	1a 1b	01c	1/2	1 2	K04	91703-0006/9	93003-0493	A	YES	
93003-0062	91703-0005/8	93002-0016	NONE	2b	01c d20	1/2	1 2	K15	91703-0006/9	93003-0472	A	YES	
93003-0057	91703-0005/8	93002-0017	NONE	1a	01c d20	1/2	1 2	K12	91703-0006/9	93003-0477	A	YES	
93003-0009	91703-0005/8	93002-0018	NONE	1a 2a	01c	1/2	1 2	K10	91703-0006/9	93003-0496	A	YES	
93003-0049	91703-0005/8	93002-0019	NONE	ALL	d20	1/2	1 2	K34	91703-0006/9	93003-0481	A	YES	
93003-0056	91703-0005/8	93002-0020	NONE	1b 2a 2b	d20	1/2	1 2	K07	91703-0006/9	93003-0479	A	YES	
93003-0063	91703-0005/8	93002-0002	NONE	1b 2a	01c d20	1/2	1 2	K01	91703-0006/9	93003-0471	B	YES	

LOWER SIDE LATCH

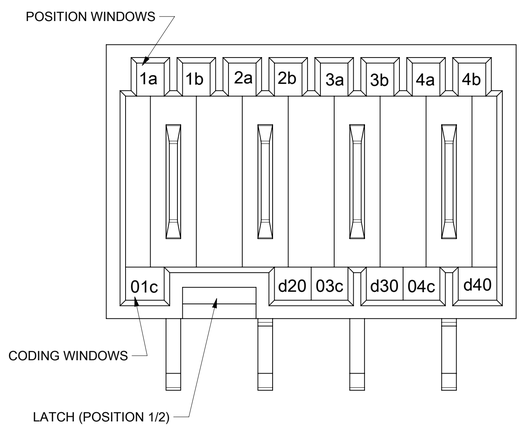

KEYING, CODING & LATCH POSITION
(4CCT EXAMPLE SHOWN)
VIEW INMATING DIRECTION

TOP SIDE LATCH

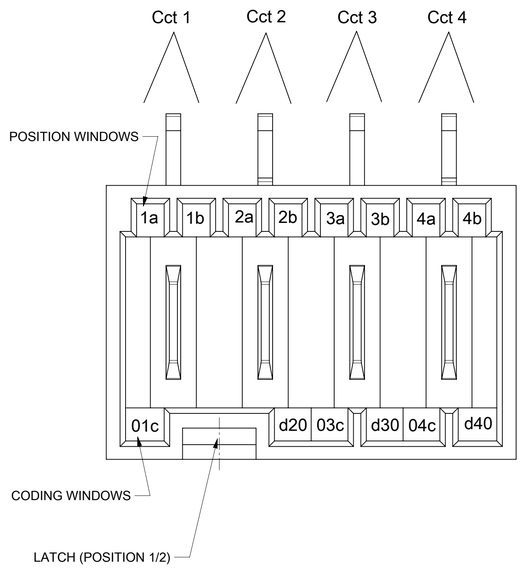

KEYING, CODING & LATCH POSITION
(4CCT EXAMPLE SHOWN)
VIEW INMATING DIRECTION

DOCUMENT STATUS	P1	RELEASE DATE	2023/05/12 09:50:23

FUNCTIONAL SYMBOLS: FA = 0, FC = 0, FP = 0

DIVISIONAL SYMBOLS

THIS DRAWING CONTAINS INFORMATION THAT IS PROPRIETARY TO MOLEX ELECTRONIC TECHNOLOGIES, LLC AND SHOULD NOT BE USED WITHOUT WRITTEN PERMISSION

DIMENSION UNITS	SCALE
mm	1:1

GENERAL TOLERANCES (UNLESS SPECIFIED)

ANGULAR TOL	±	2.0 °
4 PLACES	±	
3 PLACES	±	
2 PLACES	±	0.1
1 PLACE	±	0.2
0 PLACES	±	

DRAFT WHERE APPLICABLE MUST REMAIN WITHIN DIMENSIONS

CURRENT REV DESC:

EC NO: 749359
DRWN: RAHULH3 2023/05/12
CHK'D: RAHULH3 2023/05/12
APPR: MRAMAKRISHNA 2023/05/12

INITIAL REVISION:
DRWN: AKABADI 2017/09/08
APPR: BRUTTLE 2017/11/10

THIRD ANGLE PROJECTION

molex

RAST 5 R.A. HDR PA 66 HOUSING

PRODUCT CUSTOMER DRAWING

DOCUMENT NUMBER	DOC TYPE	DOC PART	REVISION
930030001	PSD	000	B1

DRAWING	SERIES	MATERIAL NUMBER	CUSTOMER	SHEET NUMBER
A1-SIZE	93003	SEE SHEET 3-11	GENERAL MARKET	3 OF 11

2 CIRCUIT

SEE CODE DESIGNATION TABLE FOR NUMBERING FORMAT WHEN ADDING NEW PART NUMBERS

PART NO. (TIN)	TERM NO. (TIN)	MOLEX HOUSING NO.	TERMINAL VOID POSITION	UNBLOCKED POSITION KEYS	UNBLOCKED CODING KEYS	LATCH POSITION	CONFIGURATION (SEE NOTES)	LUMBERG K REF	TERM NO. (SILVER)	PART NO. (SILVER)	P.C.B. POLARISATION OPTION	TOP SIDE LATCH	POTABLE HOUSING
93003-0064	91703-0005/8	93002-0024	NONE	ALL	ALL	1/2		K00	91703-0006/9	93003-0470	A	YES	NO
93003-0065	91703-0005/8	93002-0003	NONE	1a 2b	01c	1/2		K02	91703-0006/9	93003-0469	A	NO	
93003-0066	91703-0005/8	93002-0003	NONE	1a 2b	01c	1/2		K02	91703-0006/9	93003-0468	B	NO	
93003-0067	91703-0005/8	93002-0035	NONE	1b 2a 2b	01c d20	1/2		K78	91703-0006/9	93003-0467	A	YES	
93003-0068	91703-0005/8	93002-0002	NONE	1b 2a	01c d20	1/2		K01	91703-0006/9	93003-0466	A	NO	
93003-0069	91703-0005/8	93002-0005	NONE	2a	01c d20	1/2		K03	91703-0006/9	93003-0465	A	NO	
93003-0070	91703-0005/8	93228-0008	NONE	1a 2b	NONE	1/2		---	91703-0006/9	93003-0464	A	NO	YES
93003-0071	91703-0005	93002-0028	NONE	1a 2a 2b	01c d20	1/2		---	91703-0006	93003-0463	C	YES	NO
93003-0072	91703-0005/8	93002-0026	NONE	2a 2b	01c	1/2		---	91703-0006/9	93003-0462	A	YES	NO

B

THIS DRAWING CONTAINS INFORMATION THAT IS PROPRIETARY TO MOLEX ELECTRONIC TECHNOLOGIES, LLC AND SHOULD NOT BE USED WITHOUT WRITTEN PERMISSION

FUNCTIONAL SYMBOLS
E A = 0
E C = 0
E P = 0

DIVISIONAL SYMBOLS

DIMENSION UNITS	SCALE
mm	1:1

GENERAL TOLERANCES (UNLESS SPECIFIED)

ANGULAR TOL	±	2.0 °
4 PLACES	±	
3 PLACES	±	
2 PLACES	±	0.1
1 PLACE	±	0.2
0 PLACES	±	

DRAFT WHERE APPLICABLE MUST REMAIN WITHIN DIMENSIONS

CURRENT REV DESC:

EC NO: 749359
DRWN: RAHULH3 2023/05/12
CHK'D: RAHULH3 2023/05/12
APPR: MRAMAKRISHNA 2023/05/12

INITIAL REVISION:
DRWN: AKABADI 2017/09/08
APPR: BRUTTLE 2017/11/10

THIRD ANGLE PROJECTION

DRAWING: A1-SIZE
SERIES: 93003

molex

RAST 5 R.A. HDR PA 66 HOUSING

PRODUCT CUSTOMER DRAWING

DOCUMENT NUMBER	DOC TYPE	DOC PART	REVISION
930030001	PSD	000	B1

MATERIAL NUMBER	CUSTOMER	SHEET NUMBER
SEE SHEET 3-11	GENERAL MARKET	4 OF 11

DOCUMENT STATUS	P1	RELEASE DATE	2023/05/12 09:50:23

FORMAT: master dp-prod-A1+
DEFINITION: J
DATE: 2006/01/14

3 CIRCUIT

SEE CODE DESIGNATION TABLE FOR NUMBERING FORMAT WHEN ADDING NEW PART NUMBERS

PART NO. (TIN)	TERM NO. (TIN)	MOLEX HOUSING NO.	TERMINAL VOID POSITION	UNBLOCKED POSITION KEYS	UNBLOCKED CODING KEYS	LATCH POSITION	CONFIGURATION (SEE NOTES)	LUMBERG K REF	TERM NO. (SILVER)	PART NO. (SILVER)	P.C.B. POLARISATION OPTION	TOP SIDE LATCH
93003-0502	91703-0005/8	93002-1000	NONE	1b	01c d20	1/2	1 2 3	K01	91703-0006/9	93003-1249	A	YES
93003-0508	91703-0005/8	93002-1001	NONE	1a	03c	1/2	1 2 3	K04	91703-0006/9	93003-1248	A	YES
93003-0528	91703-0005/8	93002-1002	NONE	1a 1b	d30	1/2	1 2 3	K05	91703-0006/9	93003-1247	A	YES
93003-0512	91703-0005/8	93002-1003	NONE	1a 3b	01c	1/2	1 2 3	K06	91703-0006/9	93003-1246	A	YES
93003-0513	91703-0005/8	93002-1004	NONE	1b	d20 03c	1/2	1 2 3	K09	91703-0006/9	93003-1245	A	YES
93003-0529	91703-0005/8	93002-1005	NONE	1b 2a 2b	d30	1/2	1 2 3	K33	91703-0006/9	93003-1244	A	YES
93003-0530	91703-0005/8	93002-1006	NONE	2b	d20	1/2	1 2 3	K08	91703-0006/9	93003-1243	A	YES
93003-0526	91703-0005/8	93002-1007	NONE	ALL	d10 d30	2/3	1 2 3	K38	91703-0006/9	93003-1242	A	YES
93003-0527	91703-0005/8	93002-1008	NONE	ALL	d20	1/2	1 2 3	K40	91703-0006/9	93003-1241	A	YES
93003-0531	91703-0005/8	93002-1014	NONE	ALL	ALL	1/2	1 2 3	K00	91703-0006/9	93003-1240	A	YES
93003-0532	91703-0005/8	93002-1020	NONE	3b	01c d30	1/2	1 2 3	K37	91703-0006/9	93003-1239	A	YES
93003-0533	91703-0005/8	93002-1021	NONE	1b 3a	01c	1/2	1 2 3	K03	91703-0006/9	93003-1238	A	NO
93003-0534	91703-0005/8	93002-1000	CCT 2	1b	01c d20	1/2	1 V 3	K--	91703-0006/9	93003-1237	A	YES
93003-0535	91703-0005/8	93002-1024	CCT 2	3b	01c 03c	1/2	1 V 3	K--	91703-0006/9	93003-1236	A	YES
93003-0536	91703-0005	93002-1011	CCT 2	3b	01c d30	2/3	1 V 3	K--	91703-0006	93003-1235	C	YES
93003-0537	91703-0005	93002-1000	NONE	1b	01c d20	1/2	1 2 3	K--	91703-0006	93003-1234	C	YES
93003-0538	91703-0005	93002-1036	NONE	NONE	d10 02c d30	2/3	1 2 3	K--	91703-0006	93003-1233	C	YES
93003-0539	91703-0005/8	93002-1000	NONE	1b	01c d20	1/2	1 2 3	K01	91703-0006/9	93003-1232	A	NO
93003-0540	91703-0005/8	93002-1039	NONE	1b 2a	d20	1/2	1 2 3	--	91703-0006/9	93003-1231	A	NO

B

FUNCTIONAL SYMBOLS
FA = 0
FC = 0
FD = 0
DIVISIONAL SYMBOLS

THIS DRAWING CONTAINS INFORMATION THAT IS PROPRIETARY TO MOLEX ELECTRONIC TECHNOLOGIES, LLC AND SHOULD NOT BE USED WITHOUT WRITTEN PERMISSION

DIMENSION UNITS	SCALE
mm	1:1

GENERAL TOLERANCES (UNLESS SPECIFIED)

ANGULAR TOL	±	2.0 °
4 PLACES	±	
3 PLACES	±	
2 PLACES	±	0.1
1 PLACE	±	0.2
0 PLACES	±	

DRAFT WHERE APPLICABLE MUST REMAIN WITHIN DIMENSIONS

CURRENT REV DESC:

EC NO: 749359
DRWN: RAHULH3 2023/05/12
CHK'D: RAHULH3 2023/05/12
APPR: MRAMAKRISHNA 2023/05/12

INITIAL REVISION:
DRWN: AKABADI 2017/09/08
APPR: BRUTTLE 2017/11/10

molex

RAST 5 R.A. HDR PA 66 HOUSING

PRODUCT CUSTOMER DRAWING

DOCUMENT NUMBER	DOC TYPE	DOC PART	REVISION
930030001	PSD	000	B1

THIRD ANGLE PROJECTION	DRAWING	SERIES	MATERIAL NUMBER	CUSTOMER	SHEET NUMBER
	A1-SIZE	93003	SEE SHEET 3-11	GENERAL MARKET	5 OF 11

DOCUMENT STATUS	P1	RELEASE DATE	2023/05/12 09:50:23

FORMAT: master-tb-prod-A1
TEMPLATE: 1.0.0
DATE: 2020/11/4

4 CIRCUIT

SEE CODE DESIGNATION TABLE FOR NUMBERING FORMAT WHEN ADDING NEW PART NUMBERS

PART NO. (TIN)	TERM NO. (TIN)	MOLEX HOUSING NO.	TERMINAL VOID POSITION	UNBLOCKED POSITION KEYS	UNBLOCKED CODING KEYS	LATCH POSITION	CONFIGURATION (SEE NOTES)	LUMBERG K REF	TERM NO. (SILVER)	PART NO. (SILVER)	P.C.B. POLARISATION OPTION	TOP SIDE LATCH
93003-1254	91703-0005/8	93002-2000	NONE	1b	03c d40	1/2 3/4	1 2 3 4	K01	91703-0006/9	93003-1999	A	YES
93003-1264	91703-0005/8	93002-2001	NONE	1a 4b	d40	1/2 3/4	1 2 3 4	K03	91703-0006/9	93003-1997	A	YES
93003-1265	91703-0005/8	93002-2002	NONE	2a 4b	d20	1/2 3/4	1 2 3 4	K07	91703-0006/9	93003-1996	A	YES
93003-1267	91703-0005/8	93002-2003	NONE	1b 2a 3a 4b	01c d40	1/2 3/4	1 2 3 4	K37	91703-0006/9	93003-1994	A	YES
93003-1278	91703-0005/8	93002-2004	NONE	1a 2b 4b	01c 03c d40	1/2 3/4	1 2 3 4	K44	91703-0006/9	93003-1988	A	YES
93003-1279	91703-0005/8	93002-2005	NONE	1a 3a 3b	01c d20 d40	1/2 3/4	1 2 3 4	K32	91703-0006/9	93003-1987	A	YES
93003-1280	91703-0005/8	93002-2006	NONE	1b 2a 4b	01c d20 03c	1/2 3/4	1 2 3 4	K61	91703-0006/9	93003-1986	A	YES
93003-1281	91703-0005/8	93002-2007	NONE	1a 3a	d40	1/2 3/4	1 2 3 4	K06	91703-0006/9	93003-1985	A	YES
93003-1282	91703-0005/8	93002-2008	NONE	1a 2b 3b 4a	01c 03c d40	1/2 3/4	1 2 3 4	K65	91703-0006/9	93003-1984	A	YES
93003-1266	91703-0005/8	93002-2009	NONE	2a 4b	d20 03c	1/2 3/4	1 2 3 4	K30	91703-0006/9	93003-1995	A	YES
93003-1276	91703-0005/8	93002-2010	NONE	3b	d30	2/3	1 2 3 4	K04	91703-0006/9	93003-1989	A	YES
93003-1283	91703-0005/8	93002-2018	NONE	ALL	ALL	1/2 3/4	1 2 3 4	K00	91703-0006/9	93003-1983	A	YES
93003-1284	91703-0005/8	93002-2022	NONE	1b	03c	1/2 3/4	1 2 3 4	N/A	91703-0006/9	93003-1982	A	YES
93003-1285	91703-0005/8	93002-2024	NONE	ALL	03c d40	1/2 3/4	1 2 3 4	N/A	91703-0006/9	93003-1981	A	YES
93003-1286	91703-0005/8	93002-2000	NONE	1b	03c d40	1/2 3/4	1 2 3 4	K01	91703-0006/9	93003-1980	B	YES
93003-1287	91703-0005/8	93002-2025	CCT 2	1a 3a 3b 4a 4b	03c d40	1/2 3/4	1 V 3 4	K--	91703-0006/9	93003-1979	A	YES
93003-1288	91703-0005/8	93002-2000	NONE	1b	03c d40	1/2 3/4	1 2 3 4	K01	91703-0006/9	93003-1978	A	NO
93003-1289	91703-0005/8	93002-2032	NONE	1a 2b 3b 4a	d20 03c d40	1/2 3/4	1 2 3 4	K86	91703-0006/9	93003-1977	A	YES

THIS DRAWING CONTAINS INFORMATION THAT IS PROPRIETARY TO MOLEX ELECTRONIC TECHNOLOGIES, LLC AND SHOULD NOT BE USED WITHOUT WRITTEN PERMISSION

FUNCTIONAL SYMBOLS
FA = 0
FC = 0
FD = 0
DIVISIONAL SYMBOLS

DIMENSION UNITS	SCALE
mm	1:1

GENERAL TOLERANCES (UNLESS SPECIFIED)

ANGULAR TOL	±	2.0 °
4 PLACES	±	
3 PLACES	±	
2 PLACES	±	0.1
1 PLACE	±	0.2
0 PLACES	±	

DRAFT WHERE APPLICABLE MUST REMAIN WITHIN DIMENSIONS

CURRENT REV DESC:

EC NO: 749359
DRWN: RAHULH3 2023/05/12
CHK'D: RAHULH3 2023/05/12
APPR: MRAMAKRISHNA 2023/05/12

INITIAL REVISION:
DRWN: AKABADI 2017/09/08
APPR: BRUTTLE 2017/11/10

THIRD ANGLE PROJECTION

molex

RAST 5 R.A. HDR PA 66 HOUSING

PRODUCT CUSTOMER DRAWING

DOCUMENT NUMBER	DOC TYPE	DOC PART	REVISION
930030001	PSD	000	B1

DRAWING	SERIES	MATERIAL NUMBER	CUSTOMER	SHEET NUMBER
A1-SIZE	93003	SEE SHEET 3-11	GENERAL MARKET	6 OF 11

DOCUMENT STATUS	P1	RELEASE DATE	2023/05/12 09:50:23

4 CIRCUIT

SEE CODE DESIGNATION TABLE FOR NUMBERING FORMAT WHEN ADDING NEW PART NUMBERS

PART NO. (TIN)	TERM NO. (TIN)	MOLEX HOUSING NO.	TERMINAL VOID POSITION	UNBLOCKED POSITION KEYS	UNBLOCKED CODING KEYS	LATCH POSITION	CONFIGURATION (SEE NOTES)	LUMBERG K REF	TERM NO. (SILVER)	PART NO. (SILVER)	P.C.B. POLARISATION OPTION	TOP SIDE LATCH
93003-1290	91703-0005/8	93002-2000	CCT 3	1b	03c d40	1/2 3/4	1 2 V 4	K01	91703-0006/9	93003-1976	A	YES
93003-1291	91703-0005/8	93002-2018	NONE	ALL	ALL	1/2 3/4	1 2 3 4	K00	91703-0006/9	93003-1975	A	NO
93003-1292	91703-0005/8	93002-2043	NONE	2a 2b 3b 4b	01c d40	1/2 3/4	1 2 3 4	---	91703-0006/9	93003-1974	A	YES
93003-1293	91703-0005/8	93002-2045	NONE	1b 2b 4a 4b	d20 03c	1/2 3/4	1 2 3 4	K296	91703-0006/9	93003-1973	A	NO
93003-1294	91703-0005	93002-2000	NONE	1b	03c d40	1/2 3/4	1 2 3 4	K**	91703-0006	93003-1972	C	YES
93003-1295	91703-0005/8	93002-2000	NONE	1b	03c d40	1/2 3/4	1 2 3 4	K**	91703-0006/9	93003-1971	A	YES
93003-1296	91703-0005/8	93002-2048	NONE	1a 2b 4a	01c d40	1/2 3/4	1 2 3 4	--	91703-0006/9	93003-1970	A	YES

B

THIS DRAWING CONTAINS INFORMATION THAT IS PROPRIETARY TO MOLEX ELECTRONIC TECHNOLOGIES, LLC AND SHOULD NOT BE USED WITHOUT WRITTEN PERMISSION

FUNCTIONAL SYMBOLS
FA = 0
FC = 0
FP = 0

DIVISIONAL SYMBOLS

DIMENSION UNITS	SCALE
mm	1:1

GENERAL TOLERANCES (UNLESS SPECIFIED)

ANGULAR TOL	±	2.0 °
4 PLACES	±	
3 PLACES	±	
2 PLACES	±	0.1
1 PLACE	±	0.2
0 PLACES	±	

DRAFT WHERE APPLICABLE MUST REMAIN WITHIN DIMENSIONS

CURRENT REV DESC:

EC NO: 749359
DRWN: RAHULH3 2023/05/12
CHK'D: RAHULH3 2023/05/12
APPR: MRAMAKRISHNA 2023/05/12

INITIAL REVISION:
DRWN: AKABADI 2017/09/08
APPR: BRUTTLE 2017/11/10

THIRD ANGLE PROJECTION

DRAWING	SERIES
A1-SIZE	93003

molex

RAST 5 R.A. HDR PA 66 HOUSING

PRODUCT CUSTOMER DRAWING

DOCUMENT NUMBER	DOC TYPE	DOC PART	REVISION
930030001	PSD	000	B1

MATERIAL NUMBER	CUSTOMER	SHEET NUMBER
SEE SHEET 3-11	GENERAL MARKET	7 OF 11

DOCUMENT STATUS	P1	RELEASE DATE	2023/05/12 09:50:23

FORMAT: master-tb-prod-A1
DEFINITION: 2
DATE: 2006/01/14

5 CIRCUIT

SEE CODE DESIGNATION TABLE FOR NUMBERING FORMAT WHEN ADDING NEW PART NUMBERS

PART NO. (TIN)	TERM NO. (TIN)	MOLEX HOUSING NO.	TERMINAL VOID POSITION	UNBLOCKED POSITION KEYS	UNBLOCKED CODING KEYS	LATCH POSITION	CONFIGURATION (SEE NOTES)	LUMBERG K REF	TERM NO. (SILVER)	PART NO. (SILVER)	P.C.B. POLARISATION OPTION	TOP SIDE LATCH
93003-2000	91703-0005/8	93002-3000	NONE	1a 5b	01c d30	1/2 2/3	1 2 3 4 5	K01	91703-0006/9	93003-2749	A	YES
93003-2001	91703-0005/8	93002-3001	NONE	1a 3a	01c d30	1/2 4/5	1 2 3 4 5	K30	91703-0006/9	93003-2748	A	YES
93003-2002	91703-0005/8	93002-3002	NONE	1a 5b	01c d20 03c d50	1/2 3/4	1 2 3 4 5	K31	91703-0006/9	93003-2747	A	YES
93003-2003	91703-0005/8	93002-3003	NONE	1b 2a 3b 5a	01c 03c	1/2 3/4	1 2 3 4 5	K35	91703-0006/9	93003-2746	A	YES
93003-2023	91703-0005/8	93002-3004	NONE	1a 2a 2b 4b 5b	01c d30 04c d50	1/2 2/3 4/5	1 2 3 4 5	K36	91703-0006/9	93003-2732	A	YES
93003-2024	91703-0005/8	93002-3005	NONE	2a	01c d50	2/3 4/5	1 2 3 4 5	K43	91703-0006/9	93003-2731	A	YES
93003-2025	91703-0005/8	93002-3006	NONE	2a 4b	01c d20 d40	1/2 3/4	1 2 3 4 5	K44	91703-0006/9	93003-2730	A	YES
93003-2026	91703-0005/8	93002-3007	NONE	2b	d20	1/2 4/5	1 2 3 4 5	K02	91703-0006/9	93003-2729	A	YES
93003-2027	91703-0005/8	93002-3008	NONE	4b 5a	01c d30 04c d50	1/2 4/5	1 2 3 4 5	K45	91703-0006/9	93003-2728	A	YES
93003-2028	91703-0005/8	93002-3009	NONE	NONE	01c d40	1/2 3/4	1 2 3 4 5	K46	91703-0006/9	93003-2727	A	YES
93003-2029	91703-0005/8	93002-3032	NONE	1a 4b	d30	1/2 4/5	1 2 3 4 5	K04	91703-0006/9	93003-2726	A	YES
93003-2030	91703-0005/8	93002-3011	NONE	1a 5b	d20 d40	1/2 3/4	1 2 3 4 5	K77	91703-0006/9	93003-2725	A	YES
93003-2005	91703-0005/8	93002-3012	NONE	1b 2b 4a	d20 d30 d50	1/2 4/5	1 2 3 4 5	K40	91703-0006/9	93003-2744	A	YES
93003-2016	91703-0005/8	93002-3013	NONE	3b 4a 5b	01c d30 d50	2/3 4/5	1 2 3 4 5	K47	91703-0006/9	93003-2738	A	YES
93003-2018	91703-0005/8	93002-3014	NONE	1a 4b	01c	1/2 3/4	1 2 3 4 5	K48	91703-0006/9	93003-2736	A	YES
93003-2020	91703-0005/8	93002-3015	NONE	1a 5b	d30 04c	2/3	1 2 3 4 5	K50	91703-0006/9	93003-2734	A	YES
93003-2021	91703-0005/8	93002-3016	NONE	1b 2a 4a	01c 04c d50	1/2 4/5	1 2 3 4 5	K51	91703-0006/9	93003-2733	A	YES
93003-2022	91703-0005/8	93002-3017	NONE	2b 3b 4a	01c d20 d40	1/2 3/4	1 2 3 4 5	K52	91703-0006/9	93003-2735	A	YES
93003-2031	91703-0005/8	93002-3024	NONE	ALL	ALL	1/2 3/4	1 2 3 4 5	K00	91703-0006/9	93003-2724	A	YES
93003-2032	91703-0005/8	93002-3025	CCT 3	2b	d30	1/2 4/5	1 2 V 4 5	N/A	91703-0006/9	93003-2723	B	YES
93003-2033	91703-0005/8	93002-3027	CCT 2	2b	01c d20 03c d30 04c d50	1/2 4/5	1 V 3 4 5	N/A	91703-0006/9	93003-2722	A	YES
93003-2034	91703-0005/8	93002-3028	CCT 3	2b	01c d20 03c 04c d50	1/2 4/5	1 2 V 4 5	N/A	91703-0006/9	93003-2721	A	YES

THIS DRAWING CONTAINS INFORMATION THAT IS PROPRIETARY TO MOLEX ELECTRONIC TECHNOLOGIES, LLC AND SHOULD NOT BE USED WITHOUT WRITTEN PERMISSION

FUNCTIONAL SYMBOLS: FA = 0, FC = 0, FP = 0

DIVISIONAL SYMBOLS

DIMENSION UNITS	SCALE
mm	1:1

GENERAL TOLERANCES (UNLESS SPECIFIED)

ANGULAR TOL	±	2.0 °
4 PLACES	±	
3 PLACES	±	
2 PLACES	±	0.1
1 PLACE	±	0.2
0 PLACES	±	

DRAFT WHERE APPLICABLE MUST REMAIN WITHIN DIMENSIONS

CURRENT REV DESC:

EC NO: 749359
DRWN: RAHULH3 2023/05/12
CHK'D: RAHULH3 2023/05/12
APPR: MRAMAKRISHNA 2023/05/12

INITIAL REVISION:
DRWN: AKABADI 2017/09/08
APPR: BRUTTLE 2017/11/10

THIRD ANGLE PROJECTION

DRAWING: A1-SIZE
SERIES: 93003

molex

RAST 5 R.A. HDR PA 66 HOUSING

PRODUCT CUSTOMER DRAWING

DOCUMENT NUMBER	DOC TYPE	DOC PART	REVISION
930030001	PSD	000	B1

MATERIAL NUMBER	CUSTOMER	SHEET NUMBER
SEE SHEET 3-11	GENERAL MARKET	8 OF 11

DOCUMENT STATUS	P1	RELEASE DATE	2023/05/12 09:50:23

FORMAT: master-ts-print A1
REVISION: J
DATE: 2020/01/16

6 CIRCUIT

SEE CODE DESIGNATION TABLE FOR NUMBERING FORMAT WHEN ADDING NEW PART NUMBERS

PART NO. (TIN)	TERM NO. (TIN)	MOLEX HOUSING NO.	TERMINAL VOID POSITION	UNBLOCKED POSITION KEYS	UNBLOCKED CODING KEYS	LATCH POSITION	CONFIGURATION (SEE NOTES)	LUMBERG K REF	TERM NO. (SILVER)	PART NO. (SILVER)	P.C.B. POLARISATION OPTION	TOP SIDE LATCH
93003-2753	91703-0005/8	93002-4000	NONE	1b	03c d60	1/2 4/5	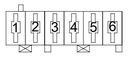	K01	91703-0006/9	93003-3499	A	YES
93003-2754	91703-0005/8	93002-4001	NONE	1a 3b 4b	01c d50 06c	1/2 4/5	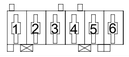	K30	91703-0006/9	93003-3498	A	YES
93003-2755	91703-0005/8	93002-4002	NONE	1a 1b 2b 3a 3b 4b	d30 04c d50	1/2 2/3 4/5	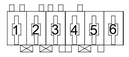	K37	91703-0006/9	93003-3497	A	YES
93003-2756	91703-0005/8	93002-4003	NONE	1a 1b 4a 4b	d10 d50	2/3 4/5	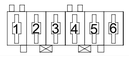	K39	91703-0006/9	93003-3496	A	YES
93003-2757	91703-0005/8	93002-4004	NONE	2a 4b 5a 6b	d20 03c 05c	1/2 3/4 5/6	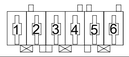	K42	91703-0006/9	93003-3495	A	YES
93003-2758	91703-0005/8	93002-4005	NONE	1a 2b 3a 3b 5b 6b	01c d40 d60	1/2 3/4 5/6	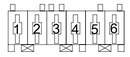	K43	91703-0006/9	93003-3494	A	YES
93003-2759	91703-0005/8	93002-4006	NONE	1b 2a 3a 4b 5a 5b 6b	01c 03c d60	1/2 3/4 5/6	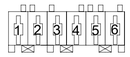	K44	91703-0006/9	93003-3493	A	YES
93003-2760	91703-0005/8	93002-4007	NONE	2b	d20 d60	1/2 5/6	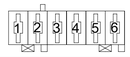	K46	91703-0006/9	93003-3492	A	YES
93003-2761	91703-0005/8	93002-4008	NONE	2b 3b 4a	01c d50 06c	1/2 4/5	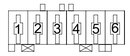	K36	91703-0006/9	93003-3491	A	YES
93003-2762	91703-0005/8	93002-4009	NONE	1b 4b	d20 03c d50 06c	1/2 4/5	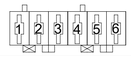	K58	91703-0006/9	93003-3486	A	YES
93003-2764	91703-0005/8	93002-4010	NONE	1a 2b 3b 4a 6b	01c 03c d40 05c d60	1/2 3/4 5/6	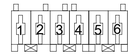	K59	91703-0006/9	93003-3485	A	YES
93003-2765	91703-0005/8	93002-4011	NONE	1a 2b 4a 6b	01c d40	1/2 3/4 5/6	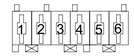	K62	91703-0006/9	93003-3484	A	YES
93003-2763	91703-0005/8	93002-4029	NONE	1b 2b 3b	01c 05c d60	1/2 3/4 5/6	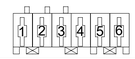	K04	91703-0006/9	93003-3490	A	YES
93003-2766	91703-0005/8	93002-4013	NONE	1b	d20 03c	1/2 4/5	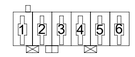	K55	91703-0006/9	93003-3489	A	YES
93003-2767	91703-0005/8	93002-4014	NONE	1b 2a 3a 5a 5b	01c d20 03c d40 d60	1/2 3/4 5/6	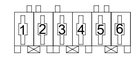	K56	91703-0006/9	93003-3488	A	YES
93003-2771	91703-0005/8	93002-4015	NONE	1a 3a 3b 5b 6a	01c d20 d40 05c d60	1/2 3/4 5/6	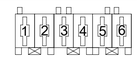	K60	91703-0006/9	93003-3487	A	YES
93003-2772	91703-0005/8	93002-4018	NONE	ALL	ALL	1/2 4/5	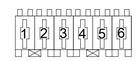	K00	91703-0006/9	93003-3483	A	YES
93003-2773	91703-0005/8	93002-4024	NONE	1b 2a 2b 3a 6a 6b	d20 04c d60	1/2 5/6	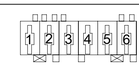	K29	91703-0006/9	93003-3482	A	NO

DOCUMENT STATUS	P1	RELEASE DATE	2023/05/12 09:50:23

FUNCTIONAL SYMBOLS
FA = 0
FC = 0
FP = 0
DIVISIONAL SYMBOLS

THIS DRAWING CONTAINS INFORMATION THAT IS PROPRIETARY TO MOLEX ELECTRONIC TECHNOLOGIES, LLC AND SHOULD NOT BE USED WITHOUT WRITTEN PERMISSION

DIMENSION UNITS	SCALE
mm	1:1

GENERAL TOLERANCES (UNLESS SPECIFIED)

ANGULAR TOL	±	2.0 °
4 PLACES	±	
3 PLACES	±	
2 PLACES	±	0.1
1 PLACE	±	0.2
0 PLACES	±	

DRAFT WHERE APPLICABLE MUST REMAIN WITHIN DIMENSIONS

CURRENT REV DESC:

EC NO: 749359
DRWN: RAHULH3 2023/05/12
CHK'D: RAHULH3 2023/05/12
APPR: MRAMAKRISHNA 2023/05/12

INITIAL REVISION:
DRWN: AKABADI 2017/09/08
APPR: BRUTTLE 2017/11/10

THIRD ANGLE PROJECTION | DRAWING: A1-SIZE | SERIES: 93003

molex

RAST 5 R.A. HDR PA 66 HOUSING

PRODUCT CUSTOMER DRAWING

DOCUMENT NUMBER	DOC TYPE	DOC PART	REVISION
930030001	PSD	000	B1

MATERIAL NUMBER	CUSTOMER	SHEET NUMBER
SEE SHEET 3-11	GENERAL MARKET	9 OF 11

7 CIRCUIT

SEE CODE DESIGNATION TABLE FOR NUMBERING FORMAT WHEN ADDING NEW PART NUMBERS

PART NO. (TIN)	TERM NO. (TIN)	MOLEX HOUSING NO.	TERMINAL VOID POSITION	UNBLOCKED POSITION KEYS	UNBLOCKED CODING KEYS	LATCH POSITION	CONFIGURATION (SEE NOTES)	LUMBERG K REF	TERM NO. (SILVER)	PART NO. (SILVER)	P.C.B. POLARISATION OPTION	TOP SIDE LATCH
93003-3500	91703-0005/8	93002-5000	NONE	NONE	03c d40 07c	1/2 5/6	1 2 3 4 5 6 7	K01	91703-0006/9	93003-4220	A	YES
93003-3512	91703-0005/8	93002-5001	NONE	3a 4a	d30 d70	1/2 5/6	1 2 3 4 5 6 7	K30	91703-0006/9	93003-4248	A	YES
93003-3504	91703-0005/8	93002-5002	NONE	2b	d20 d60	1/2 5/6	1 2 3 4 5 6 7	K32	91703-0006/9	93003-4247	A	YES
93003-3513	91703-0005/8	93002-5003	NONE	1a 1b 3a 4b 5a	01c 07c	1/2 3/4 5/6	1 2 3 4 5 6 7	K40	91703-0006/9	93003-4240	A	YES
93003-3514	91703-0005/8	93002-5004	NONE	2a	01c d50	2/3 4/5	1 2 3 4 5 6 7	K41	91703-0006/9	93003-4239	A	YES
93003-3515	91703-0005/8	93002-5005	NONE	7b	01c d40 d70	1/2 3/4 6/7	1 2 3 4 5 6 7	K43	91703-0006/9	93003-4238	A	YES
93003-3516	91703-0005/8	93002-5006	NONE	1b	03c d60	1/2 4/5	1 2 3 4 5 6 7	K31	91703-0006/9	93003-4237	A	YES
93003-3517	91703-0005/8	93002-5007	NONE	1a 3a 4b 7b	01c d20 03c 06c	1/2 3/4 6/7	1 2 3 4 5 6 7	K45	91703-0006/9	93003-4236	A	YES
93003-3518	91703-0005/8	93002-5008	NONE	1b 7a	02c d50	2/3 6/7	1 2 3 4 5 6 7	K48	91703-0006/9	93003-4235	A	YES
93003-3519	91703-0005/8	93002-5009	NONE	1a 2b 3a 4b 6a	d20 03c d40 d50 d70	1/2 3/4 6/7	1 2 3 4 5 6 7	K51	91703-0006/9	93003-4234	A	YES
93003-3520	91703-0005/8	93002-5010	NONE	1b 6a	d20 03c d50 d70	1/2 3/4 6/7	1 2 3 4 5 6 7	K69	91703-0006/9	93003-4233	A	YES
93003-3505	91703-0005/8	93002-5011	NONE	1b 2a 5a 5b 7b	d20 d50 06c d70	1/2 4/5 6/7	1 2 3 4 5 6 7	K34	91703-0006/9	93003-4246	A	YES
93003-3506	91703-0005/8	93002-5012	NONE	2b	d20 07c	1/2 3/4 5/6	1 2 3 4 5 6 7	K35	91703-0006/9	93003-4245	A	YES
93003-3507	91703-0005/8	93002-5013	NONE	2a 2b 4b 5b 6a	d20 03c d40 d60	1/2 3/4 5/6	1 2 3 4 5 6 7	K38	91703-0006/9	93003-4244	A	YES
93003-3510	91703-0005/8	93002-5014	NONE	2b 4a 4b 5b 6a	01c d20 d40 d60	1/2 3/4 5/6	1 2 3 4 5 6 7	K42	91703-0006/9	93003-4241	A	YES
93003-3521	91703-0005/8	93002-5016	NONE	ALL	ALL	1/2 5/6	1 2 3 4 5 6 7	K00	91703-0006/9	93003-4232	A	YES
93003-3522	91703-0005/8	93002-5019	CCT 6	ALL	03c d40 07c	1/2 5/6	1 2 3 4 5 V 7	---	91703-0006/9	93003-4231	A	YES
93003-3523	91703-0005/8	93002-5000	NONE	NONE	03c d40 07c	1/2 5/6	1 2 3 4 5 6 7	K01	91703-0006/9	93003-4230	A	NO
93003-3524	91703-0005/8	93002-5020	NONE	ALL	ALL	1/2 4/5 6/7	1 2 3 4 5 6 7	K101	91703-0006/9	93003-4229	A	YES
93003-3525	91703-0005/8	93002-5019	NONE	ALL	03c d40 07c	1/2 5/6	1 2 3 4 5 6 7	---	91703-0006/9	93003-4228	A	YES
93003-3526	91703-0005/8	93002-5017	CCT 4,5,6	2a 3b 4b 5a 6a 6b 7a	01c d30 04c 06c d60 d70	1/2 4/5	1 2 3 V V V 7	---	91703-0006/9	93003-4227	A	YES
93003-3527	91703-0005/8	93002-5017	CCT 4	2a 3b 4b 5a 6a 6b 7a	01c d30 04c 06c d60 d70	1/2 4/5	1 2 3 V 5 6 7	---	91703-0006/9	93003-4226	A	YES
93003-3529	91703-0005/8	93002-5024	NONE	3a 4b 7a	ALL	1/2 5/6	1 2 3 4 5 6 7	---	91703-0006/9	93003-4225	A	YES

THIS DRAWING CONTAINS INFORMATION THAT IS PROPRIETARY TO MOLEX ELECTRONIC TECHNOLOGIES, LLC AND SHOULD NOT BE USED WITHOUT WRITTEN PERMISSION

FUNCTIONAL SYMBOLS
FA = 0
FC = 0
FP = 0
DIVISIONAL SYMBOLS

DIMENSION UNITS	SCALE
mm	1:1

GENERAL TOLERANCES (UNLESS SPECIFIED)

ANGULAR TOL	±	2.0 °
4 PLACES	±	
3 PLACES	±	
2 PLACES	±	0.1
1 PLACE	±	0.2
0 PLACES	±	

DRAFT WHERE APPLICABLE MUST REMAIN WITHIN DIMENSIONS

CURRENT REV DESC:

EC NO: 749359
DRWN: RAHULH3 2023/05/12
CHK'D: RAHULH3 2023/05/12
APPR: MRAMAKRISHNA 2023/05/12

INITIAL REVISION:
DRWN: AKABADI 2017/09/08
APPR: BRUTTLE 2017/11/10

THIRD ANGLE PROJECTION

molex

RAST 5 R.A. HDR PA 66 HOUSING

PRODUCT CUSTOMER DRAWING

DOCUMENT NUMBER	DOC TYPE	DOC PART	REVISION
930030001	PSD	000	B1

DRAWING	SERIES	MATERIAL NUMBER	CUSTOMER	SHEET NUMBER
A1-SIZE	93003	SEE SHEET 3-11	GENERAL MARKET	10 OF 11

DOCUMENT STATUS	P1	RELEASE DATE	2023/05/12 09:50:23

COPYRIGHT - creation file generation v1.1
REVISION: 2
DATE: 2020/01/14

8 CIRCUIT

SEE CODE DESIGNATION TABLE FOR NUMBERING FORMAT WHEN ADDING NEW PART NUMBERS

PART NO. (TIN)	TERM NO. (TIN)	MOLEX HOUSING NO.	TERMINAL VOID POSITION	UNBLOCKED POSITION KEYS	UNBLOCKED CODING KEYS	LATCH POSITION	CONFIGURATION (SEE NOTES)	LUMBERG K REF	TERM NO. (SILVER)	PART NO. (SILVER)	P.C.B. POLARISATION OPTION	TOP SIDE LATCH
93003-4252	91703-0005/8	93002-6000	NONE	4a 6b	03c d60	1/2 3/4 5/6 7/8	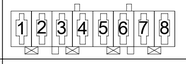	K30	91703-0006/9	93003-4998	A	YES
93003-4253	91703-0005/8	93002-6001	NONE	1a 2a 3a 3b 6a 7a 7b 8b	01c 05c d60	1/2 3/4 5/6 7/8	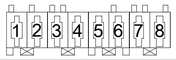	K33	91703-0006/9	93003-4997	A	YES
93003-4254	91703-0005/8	93002-6002	NONE	2b 3b 4b 5a 5b 7a 8b	01c d60 d80	1/2 4/5 7/8	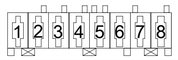	K41	91703-0006/9	93003-4996	A	YES
93003-4255	91703-0005/8	93002-6003	NONE	1b 4b 7b 8b	01c d20 04c d50 07c	1/2 4/5 7/8	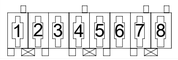	K45	91703-0006/9	93003-4995	A	YES
93003-4256	91703-0005/8	93002-6004	NONE	1a 1b 3b 5a 6b 7a 8b	01c 03c d40 d60	1/2 3/4 5/6 7/8	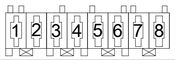	K46	91703-0006/9	93003-4993	A	YES
93003-4257	91703-0005/8	93002-6005	NONE	1b 5a 6b 8a	03c d40 05c 07c d80	1/2 3/4 5/6 7/8	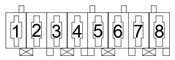	K48	91703-0006/9	93003-4992	A	YES
93003-4259	91703-0005/8	93002-6006	NONE	8b	02c d30 07c	2/3 7/8	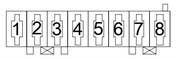	--	91703-0006/9	93003-4991	A	YES
93003-4258	91703-0005/8	93002-6007	NONE	1a 4b 5b 6a 8b	d40 d60 07c d80	1/2 3/4 5/6 7/8	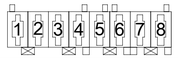	K44	91703-0006/9	93003-4994	A	YES
93003-4263	91703-0005/8	93002-6008	NONE	8b	02c d30 07c	2/3		K49	91703-0006/9	93003-4990	A	YES
93003-4264	91703-0005/8	93002-6006	NONE	8b	02c d30 07c	2/3 7/8	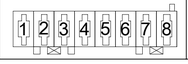	--	91703-0006/9	93003-4989	A	YES

THIS DRAWING CONTAINS INFORMATION THAT IS PROPRIETARY TO MOLEX ELECTRONIC TECHNOLOGIES, LLC AND SHOULD NOT BE USED WITHOUT WRITTEN PERMISSION

FUNCTIONAL SYMBOLS: A = 0, C = 0, P = 0

DIVISIONAL SYMBOLS

DIMENSION UNITS	SCALE
mm	1:1

GENERAL TOLERANCES (UNLESS SPECIFIED)

ANGULAR TOL	±	2.0 °
4 PLACES	±	
3 PLACES	±	
2 PLACES	±	0.1
1 PLACE	±	0.2
0 PLACES	±	

DRAFT WHERE APPLICABLE MUST REMAIN WITHIN DIMENSIONS

CURRENT REV DESC:

EC NO: 749359
DRWN: RAHULH3 2023/05/12
CHK'D: RAHULH3 2023/05/12
APPR: MRAMAKRISHNA 2023/05/12

INITIAL REVISION:
DRWN: AKABADI 2017/09/08
APPR: BRUTTLE 2017/11/10

THIRD ANGLE PROJECTION

DRAWING	SERIES
A1-SIZE	93003

molex

RAST 5 R.A. HDR PA 66 HOUSING

PRODUCT CUSTOMER DRAWING

DOCUMENT NUMBER	DOC TYPE	DOC PART	REVISION
930030001	PSD	000	B1

MATERIAL NUMBER	CUSTOMER	SHEET NUMBER
SEE SHEET 3-11	GENERAL MARKET	11 OF 11

DOCUMENT STATUS	P1	RELEASE DATE	2023/05/12 09:50:23

FORMAT: master-tb-prod-A1
REVISION: 7
DATE: 2006/01/14