THIS DRAWING IS UNPUBLISHED. RELEASED FOR PUBLICATION 20
© COPYRIGHT 2022 TE Connectivity. All Rights Reserved. ALL RIGHTS RESERVED.

LOC	DIST
–	–

REVISIONS

P	LTR	DESCRIPTION	DATE	DWN	APVD
	A	INITIAL RELEASED	14FEB22	S.X	E.J
	A2	ECN-22-174554	14SEP22	X.L	E.J
	A3	ECN-22-178197	30SEP22	C.X	E.J
	A4	ECN-23-194627	22NOV22	C.X	E.J

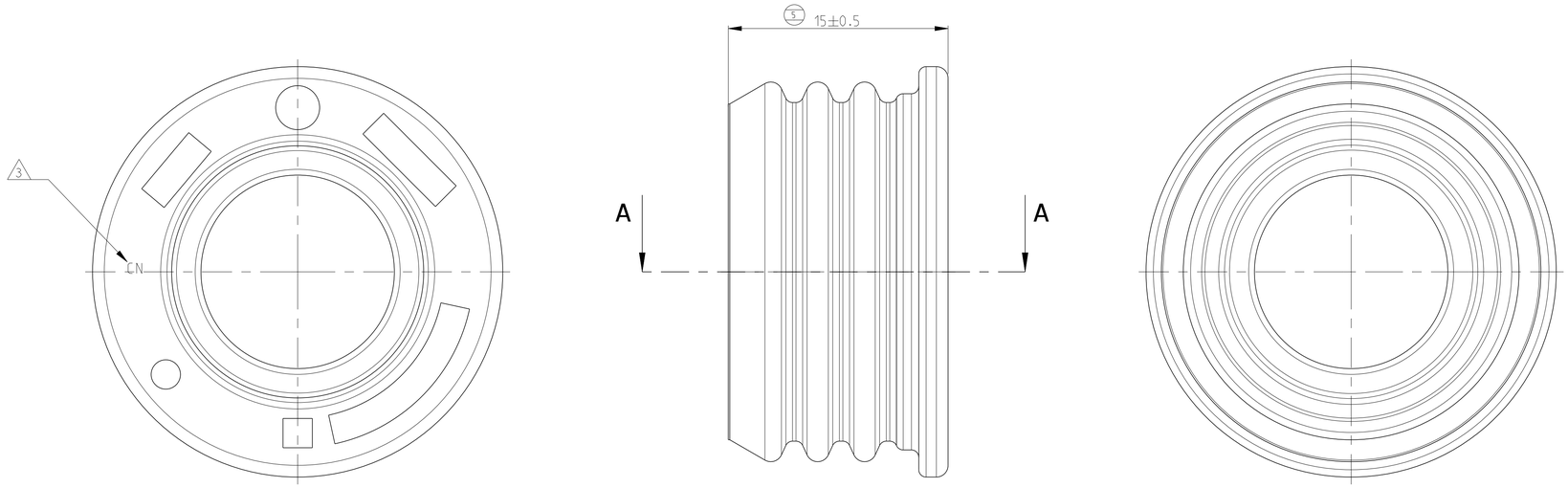

3D VIEWS

1:1

1:1

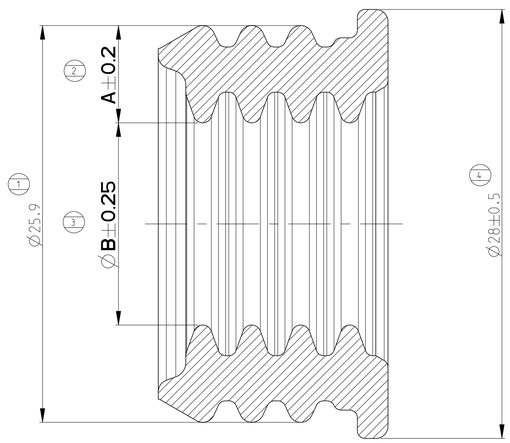

A-A

1. 2396268-* AND 1719826-* ONLY MATERIAL IS DIFFERENT AND CAN BE REPLACED BY EACH OTHER.
2. CORRESPONDING PN AS BELOW.

P/N	MATCH P/N
~~2396268-1~~	~~1719826-5~~
2396268-2	1719826-6
2396268-3	1719826-7

3. 'CN' MARK
4. SUPPLIED FROM: LOOSE PIECE PACKED INTO AIR TIGHT POLYETHYLENE PACKET
5. ONLY APPROVED CABLE SUPPLIERS AND CABLE SIZES ARE LISTED. NOT LISTED CABLE SUPPLIERS AND CABLE SIZES MUST BE VALIDATED!
6. MUST BE FREE OF CRACK, FLAW OR OTHER IMPERFECTION WHICH COULD AFFECT ITS FUCTIONALITY. (A4)
7. BURRS ARE NOT ALLOWED IN THE RIB FUNCTION AREA.

(A4)

CABLE TYPE	CABLE SIZE	WIRE DIAMETER [MM]	TE ORDER-NO.	TITLE	MASS [kg]	MATERIAL	SURFACE COLOUR	DIMENSION A	DIMENSION B	STATUS
ISO SPEC	50mm²	Ø15.2-0.6	1-2396268-1	SINGLE WIRE SEAL	0.0048	SILICON SELF LUBRICATION HARDNESS 30±5 SHORE A	WHITE SIM. RAL 9010	6.45	13	IN VALIDATION STATUS
LV SPEC	50mm²	Ø15.8-0.6	2396268-3		0.0051		GREY SIM. RAL 7000	6.15	13.6	IN PRODUCTION STATUS
	35mm²	Ø14.4±0.6	2396268-2		0.0053		RED SIM. RAL 3020	6.85	12.2	
	~~25mm²~~	~~Ø12.2-0.6~~	~~2396268-1~~		~~0.0061~~		BLUE SIM. RAL 5015	~~7.95~~	~~10~~	

THIS DRAWING IS A CONTROLLED DOCUMENT.

DIMENSIONS: mm

TOLERANCES UNLESS OTHERWISE SPECIFIED:
0-PLC ±
1 PLC ±0.1
2 PLC ±0.05 ALL TO DIM. NOT TO DIM. NOT TO DIM. ±0.025 TO NOM. DIM.
3 PLC ±0.001
4-PLC ±0.0001
ANGLES ±2

MATERIAL: - -
FINISH: - -

DWN	S.XIA	14FEB2022
CHK	F.MA	14FEB2022
APVD	E.JIANG	14FEB2022
PRODUCT SPEC	108-94293	
APPLICATION SPEC	114-94133	
WEIGHT	-	

TE Connectivity

NAME: SINGE WIRE SEAL, 8MM HV
Einzelleitungsdichtung, 8mm HV
-

SIZE	CAGE CODE	DRAWING NO	RESTRICTED TO
A1	00779	C-2396268	-

CUSTOMER DRAWING;RESTRICTED CUSTOMER | SCALE 2:1 | SHEET 1 OF 1 | REV A4

4805 (3/11)