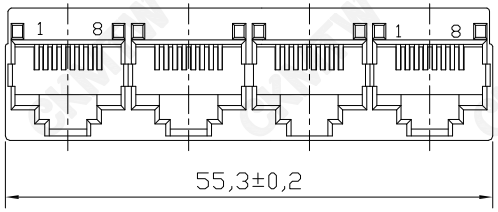

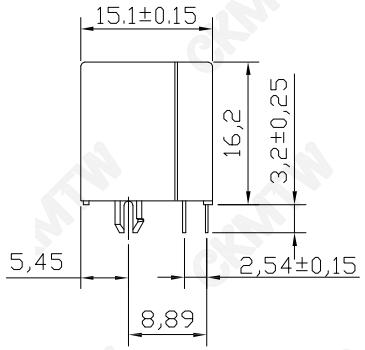

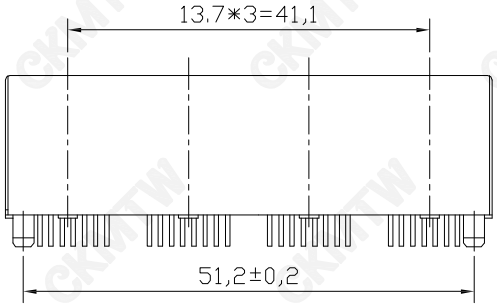

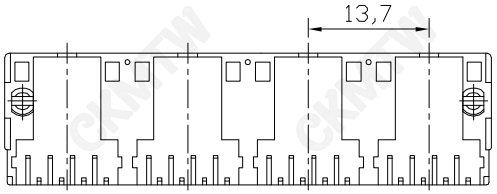

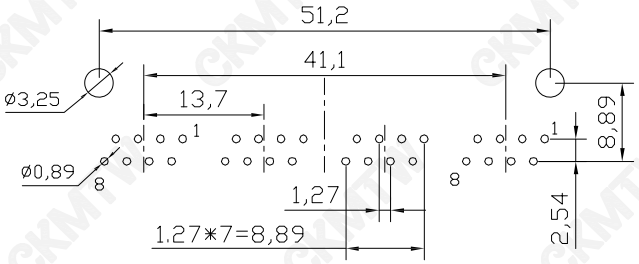

PC Board Layout
Component Side Shown

NOTES:
MATERIAL:
1. HOUSING MATERIAL :GLASS FILLED POLYESTER UL94V-0.
2. CONTACT MATERIAL :PHOSPHOR BRONZE Φ=0.46mm.
3. PLATING :SELECTING GOLD PLATING NICKEL

ELECTRICAL :
1. VOLTAGE RATING :125 VAC RMS.
2. CURRENT RATING :1.5 AMP.
3. CONTACT RESISTANCE :30 MILLIOHMS MAX.
4. INSULATION RESISTANCE :500 MEGOHMS MIN @ 500V DC
5. DIELECTRIC WITHSTANDING RESISTANCE
:1000V AC RMS 50Hz.1MIN.

MECHANICAL:
1. DURRABILITY: :750 CYCLES MIN:
2. PCB RETENTION PRE-SOLDER :1 LB MIN
ENVIRONMENTAL:
1. STORAGE :-40℃ TO 85℃
2. OPERATION :-25℃ TO 85℃.

TOLERANCE TABLE	
.0	±0.30
.00	±0.20
.000	±0.05

APPROVED:	DATE:	Ckmtw 深圳市灿科盟实业有限公司 CHANKLEMENT INDUSTRYCO.,LTD
CHECKED:	DATE:	TITLE: RJ45-8P/8C 52E 1*4 四胞胎 直插 全塑 黑色
DRAWN: L-YAN	DATE: 2020-08-15	PART.NO. R-RJ45S08P-A400
		UNIT mm SCALE free
		FILE NO. Ckmtw-RJ45-0324 REV. A HY04