REV.	DESCRIPTION	ECN NO.	NAME	DATE

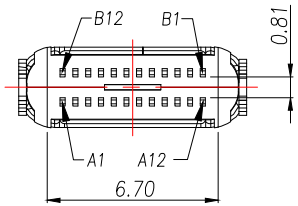

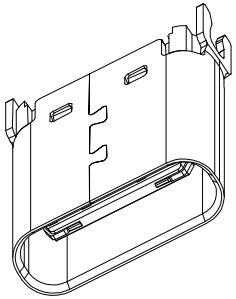

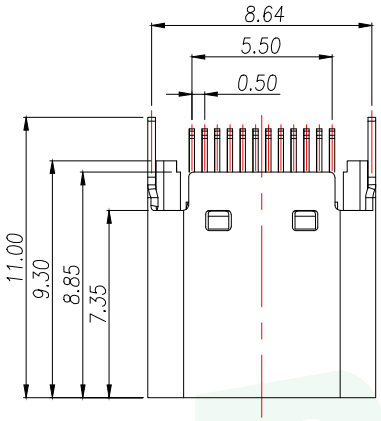

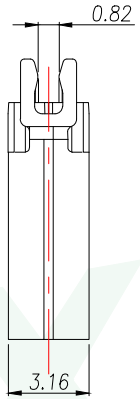

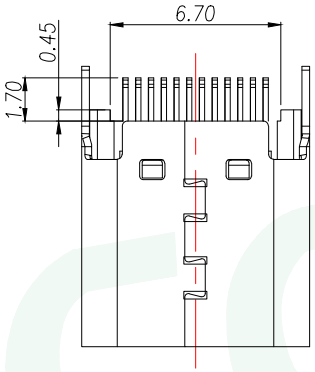

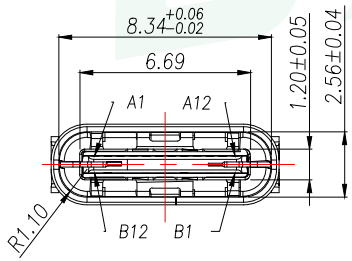

NOTE:
1.MATERIAL SPECIFICATION:
1.HOUSING:LCP,UL94 V-0.
2.CONTACTS: COPPER ALLOY(C1814)
3.MID PLATE: STAINLESS STEEL(SUS301)
4.FRONT SHELL: STAINLESS STEEL(SUS304)
5.EMI PLATE: STAINLESS STEEL(SUS301)
2.PLATING SPECIFICATION:
2-1.TERMINAL:
Ni 50u" MIN. UNDER PLATED OVER ALL.
Au PLATED ON THE FUNCTIONAL AREA OF CONTACT.
CONTACT FUNCTIONAL AREA PLATED : Au 3u"
CONTACT SOLDER AREA PLATED : Au G/F"
2-2.FRONT SHELL:
Ni 30u" MIN. UNDER PLATED OVER ALL.
2-3.EMI PLATE:
NI 50u" MIN PLATED OVER ALL
2-4.MID PLATE:
CLEAR ONLY
3.MECHANICAL PERFORMANCE,
3-1.INSERTION FORCE: 0.5~2.0kgf.
3-2.REMOVAL FORCE: 0.8kgf~2.0kgf.
3-3.DURABILITY: 10000 CYCLES.
4.ELECTRICAL PERFORMANCE,
4-1. CURRENT RATING:5.0A
VOLTAGE RATING:5.0V
4-2. LLCR:
VBUS & GND PINS AND OTHER PINS: 40mΩ/PIN MAX.
SHIELD: 50mΩ/MAX.
LLCR MAX. CHANGE OF ALL PINS: 10mΩ.
4-3.INSULATION RESISTANCE: 100MΩ MIN
4-4.DIELECTRIC WITHSTAND VOLTAGE,AC 100V FOR 1 MINUTE.
5. ENVIRONMENTAL PERFORMANCE:
OPERATING TEMPERATURE: -40°C~+85°C.
6.IR REFLOW:
THE PEAK TEMPERATURE ON THE BOARD SHALL
BE MAINTAINED FOR 10 SECONDS AT 260°C.

GENERAL TOLERANCE	DONGGUAN BAOXUN PRECISION TECHNOLOGY CO., LTD				BXCONN®
DIM. TOL. X X.X ±0.30 X.XX ±0.25 X.XXX ±0.15 GENERAL ANGLE: ±3°	TITLE: USB C F SPLINT CONN. PCB=0.8 (L=9.30)				
	DWG. NO.: UC12-0B24F00P11			DRAWN: MAX	
	PART NO.: UC12-0B24F00P11			CHECKED: ELLA	
	UNIT: mm	SCALE: none	SHEET: 1of 1	DWG. SIZE: A4	LAYER: bxconn	APPROVED: WILL

REV.	DESCRIPTION	ECN NO.	NAME	DATE

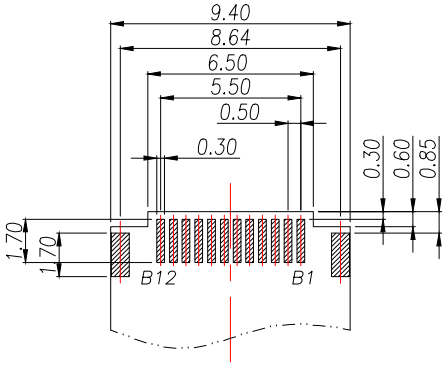

BOTTOM VIEW

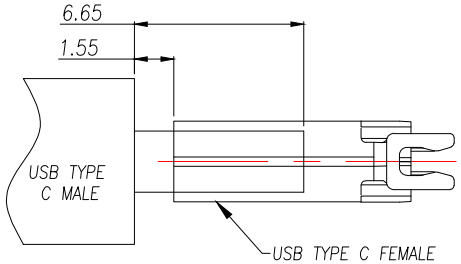

AFTER ASSEMBLY

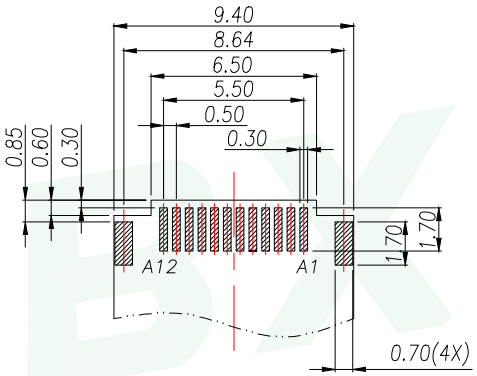

RECOMMENDED PCB LAYOUT(TOP VIEW)

THICKNESS 0.8±0.05MM;DEFAULT TOLERANCE:±0.05

USB TYPE-C PIN ASSIGNMENTS

PIN NUMBER	SIGNAL NAME	PIN NUMBER	SIGNAL NAME
A1	GND	B12	GND
A2	SSTXp1	B11	SSRXp1
A3	SSTXn1	B10	SSRXn1
A4	VBUS	B9	VBUS
A5	CC1	B8	SBU2
A6	Dp1	B7	Dn2
A7	Dn1	B6	Dp2
A8	SBU1	B5	CC2
A9	VBUS	B4	VBUS
A10	SSRXn2	B3	SSTXn2
A11	SSRXp2	B2	SSTXp2
A12	GND	B1	GND

GENERAL TOLERANCE	DONGGUAN BAOXUN PRECISION TECHNOLOGY CO., LTD					BXCONN®
DIM. TOL. X X.X ±0.30 X.XX ±0.25 X.XXX ±0.15 GENERAL ANGLE: ±3°	TITLE: USB C F SPLINT CONN. PCB=0.8 (L=9.30)					
	DWG. NO.: UC12-0B24F00P11				DRAWN: MAX	
	PART NO.: UC12-0B24F00P11				CHECKED: ELLA	
	UNIT: mm	SCALE: none	SHEET: 1of 1	DWG. SIZE: A4	LAYER: bxconn	APPROVED: WILL