# C&K Switches Catalog

Pushbutton

Tactile

Navigation

Keyswitch

Detect

Toggle

Rocker

Dip

Slides

Snap

Rotary

Rotary (Encoder)

Switchlock

Thumbwheel

Smartcard Connector

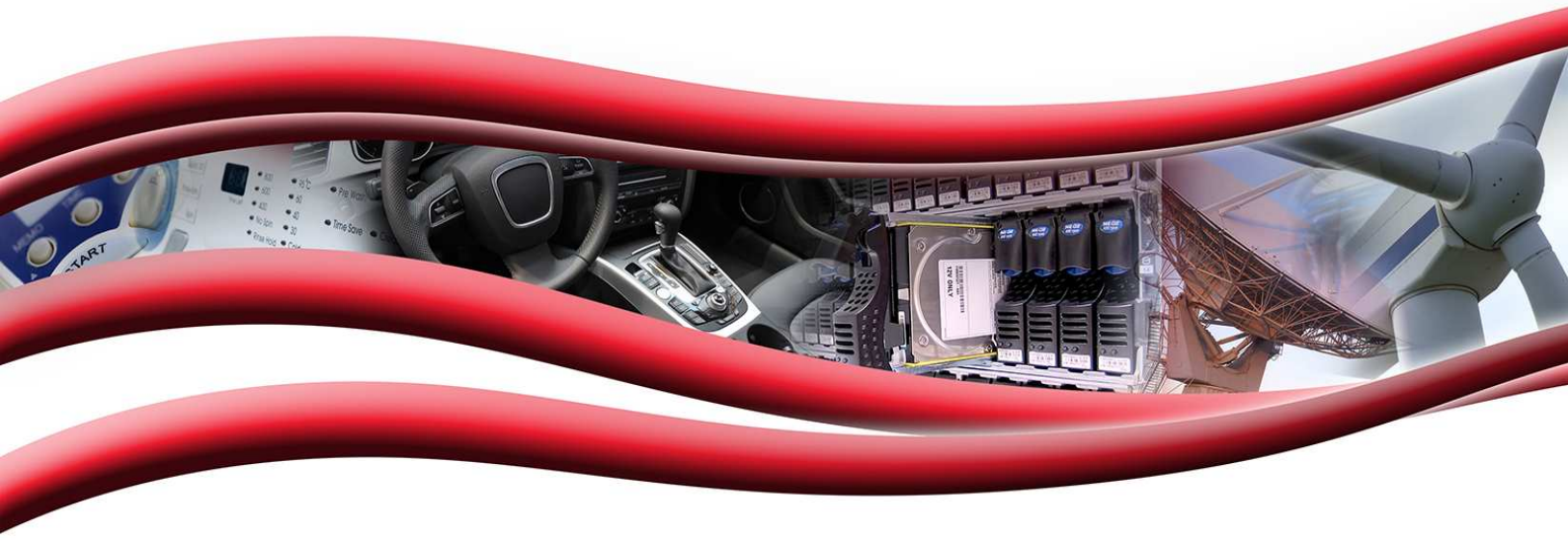

# Pushbutton
# Product Selection Guide

| Pushbutton | | | | | | | | | |
|---|---|---|---|---|---|---|---|---|---|
| **Series** | **ELUM** | **EP** | **TP** | **E020** | **8020** | **E010** | **8060** | **8500** | **KM** |
| **Switch Type** | Mom./ Latching | Tiny | Tiny | Snap-acting Mom. | Snap-acting Mom. | Miniature | Alternate Action | Sub-miniature | Sub-miniature |
| **Poles/Throws** | SPDT | SPST, SPDT, DPST | SPST, SPDT, DPST | SPDT, DPDT | SPDT, DPDT, 3PDT, 4PDT | SPDT | SPDT, DPDT | SPST | SPST, SPDT |
| **Max. Current** | 3.5 VA | 1 Amp | 1 Amp | 1 Amp | 1 Amp | 4 Amps | 6 Amps | 3 Amps | 1 Amp |
| **Process Sealed** | | • | | • | | • | | | |
| **Illuminated** | • | | | | • | | • | • | |
| **PCB Mount Options** | | | | | | | | | |
| Thru-hole | • | • | • | • | • | • | • | • | • |
| Vertical | | • | • | • | • | • | • | • | • |
| Right Angle | • | • | • | • | • | • | • | • | • |
| Surface Mount | • | • | | | | | | | |
| **Panel Mount** | | | • | | • | • | • | • | • |
| **Page No.** | A-4 | A-9 | A-15 | A-21 | A-29 | A-46 | A-52 | A-62 | A-67 |

| Pushbutton | | | | | | | |
|---|---|---|---|---|---|---|---|
| **Series** | **8600** | **8700** | **GP** | **PN** | **PHB** | **F** | **NE-18** |
| **Switch Type** | Micro-miniature | Over Travel | Ultra-miniature | Alternate & Mom. Action | Short Stroke | Alternate & Mom. Action | Mains / Power |
| **Poles/Throws** | SPST | SPST | SPST, SPDT | SPDT, DPDT, 4PDT | DPDT, 4PDT | DPDT, 4PDT, 6PDT, 8PDT, 10PDT | DPST, DPDT Varied |
| **Max. Current** | 500 mA | 1 Amp | 0.4 VA | 200 mA | 100 mA | 500 mA | 6 A |
| **Process Sealed** | | | • | | | | |
| **PCB Mount Options** | | | | | | | |
| Thru-hole | • | • | • | • | • | • | • |
| Vertical | • | • | • | | | | |
| Right Angle | | | • | • | • | • | • |
| Surface Mount | | | • | | | | |
| **Panel Mount** | • | • | | | | • | • |
| **Page No.** | A-71 | A-74 | A-77 | A-81 | A-84 | A-87 | A-96 |

# Pushbutton
# Product Selection Guide

| Pushbutton | | | | | | | | |
|---|---|---|---|---|---|---|---|---|
| **Series** | **FP** | **AP** | **APB** | **HP** | **NP** | **PBA** | **PB** | **PS** |
| **Switch Type** | Ultra Miniature | Industrial | Industrial | Hall Effect | Sealed Power | Snap-acting Mom. | Miniature | Sub-miniature Microminiature |
| **Poles/Throws** | SPST | SPST | SPST | Linear Output | SPDT | DPST | DPDT 4PDT | SPDT DPDT |
| **Max. Current** | 0.4 VA | 400mA | 400mA | 10 mA | 5 Amp | 250mA | 0.3A / 1A | 0.1 / 1A 0.3 / 2A |
| **Process Sealed** | • | IP67 | IP67 | IP68 | IP68 | | | |
| **PCB Mount Options** | | | | | | | | |
| Thru-hole | • | • | • | | • | • | • | • |
| Vertical | • | • | • | • | • | | | • |
| Right Angle | • | | | | | • | • | • |
| Panel Mount | | • | • | • | • | | | • |
| Wire Leads | | • | • | • | • | | | |
| Solder Lug | | • | • | | | | | |
| Surface Mount | | | | | | | | |
| Quick Connect | | | | | | | | |
| **Page No.** | A-105 | A-108 | A-114 | A-118 | A-120 | A-127 | A-131 | A-139 |

# ELUM™ Series
# Right Angle Illuminated Latching Pushbutton

**LEAD FREE COMPATIBLE OPTION**

## Features/Benefits

- *SPDT (N.O. & N.C.)*
- *Low height above PCB*
- *Reliable self-cleaning contact*
- *Surface-mount or thru-hole PCB*
- *Standard or custom actuator*
- *Central LED illumination*
- *Latching or Momentary*
- *Long travel. Smooth feel*
- *RoHS compliant and compatible*

## Typical Applications

- *Telecom network equipment*
- *Automotive electronics*
- *Consumer electronics*
- *Computer, server, modem, data storage*
- *Professional instrumentation, medical*

Patent Numbers
6,974,924 B2 US
EP1583118B1 Europe

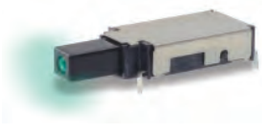

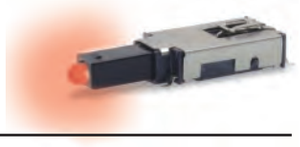

## Materials

FIXED CONTACTS: Stainless steel, silver plated with gold flash
TERMINALS: Stainless steel, silver plated
MOVABLE CONTACTS: Copper alloy, silver plated with gold flash
BASE: Glass filled LCP (UL94V-0)
ACTUATOR: Glass filled nylon 4/6 (UL94V-0)
COVER: Stainless steel

## Electrical

MAXIMUM POWER: 3.5 VA
MIN./MAX. VOLTAGE: 20 mV – 50 VDC
MIN./MAX. CURRENT: 0.01 mA – 250 mA
DIELECTRIC STRENGTH: ≥ 250 Vrms
CONTACT RESISTANCE: ≤ 50 mΩ
INSULATION RESISTANCE: ≥ $10^9$ Ω
BOUNCE TIME: ≤1 ms
LED SPECIFICATIONS: See page A-5

## Mechanical

OPERATING FORCE: 2.5 N at Full Travel
SWITCHING TRAVEL: .067" (1.7 mm)
LATCH TRAVEL: .131" (3.6 mm)
FULL TRAVEL: .200" (5.1 mm)

## Operating Environment

OPERATING TEMPERATURE: -40˚C TO 80˚C.
STORAGE TEMPERATURE: -40˚C TO 80˚C.
RELATIVE HUMIDITY: 90% R.H. @ 80˚C.
OPERATING LIFE: 30,000 Cycles.
VIBRATION: Per EIA 186-E Method
MECHANICAL SHOCK: Per EIA 186-E Method 12.
OVERLOAD: Withstands 40 N for 1 minute without damage

## Process Environment

SOLDERABILITY: According to Mil STD 202F Method 208D or EIA RS-186E Method 9.
LEAD FREE PROCESS COMPATIBLE: 260˚C peak, 10 seconds Max. above 250° C.
WASHING PROCESS: No clean process compatible (SMT)
Bottom wash compatible (Thru-hole)
SHEAR TEST (SWITCH/PCB): > 40 N

## Packaging

"SA" Terminal Style SMT: Tape and reel per EIA 481-2 (450/reel)
"TH" Terminal Style PC: Tray (60/tray)

**NOTE:** Any models supplied with Q, contact material are RoHS compliant.

**NOTE:** Specifications and materials listed above are for switches with standard options. For information on specific and custom switches, please contact Customer Service.

## Build-A-Switch

To order, simply select desired option from each category and place in the appropriate box.

E L U M — □ □ — □ □ — Q — □ — □ □ □

**Designation**
**ELUM** ELUM Series

**Switch Function**
**OA** Momentary
**OC***** Momentary short travel
**EE** Latching (push-push)

**Terminal Style**
**TH** Right Angle, PC thru-hole
**SA** Right Angle, surface mount

**Contact Material***
**Q** Silver with gold flash

**Illumination**
**(NONE)** Models without illumination
**1** LED White
**2** LED Bi-color – Red (Green)
**3** LED Red
**5** LED Amber
**6** LED Green
**7** LED Blue
**8** LED Bi-Color – Amber (Green)

**Actuator Style****
**C02** Black without window
**C12** Black with window
**C22** Black with window and snap feature for custom actuators

* Other plating options available, please contact Customer Service.
** Custom actuators available, please contact Customer Service.
*** Short travel available in momentary only.

Third Angle Projection

*Dimensions are shown: Inches (mm)*
*Specifications and dimensions subject to change*

# ELUM™ Series
# Right Angle Illuminated Latching Pushbutton

## STANDARD OPTIONS

### ELUMEESAQ7C12

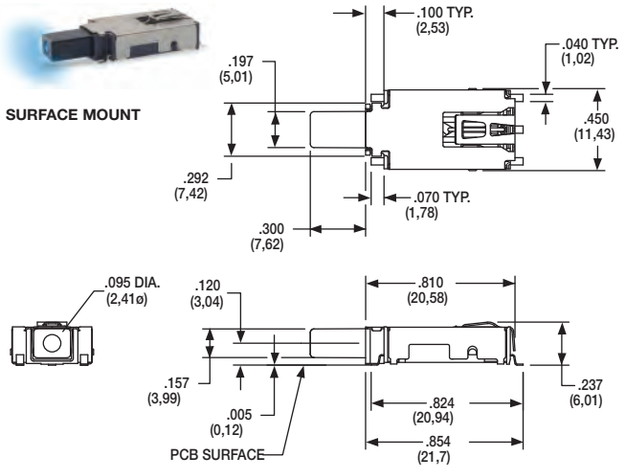


ACTUATOR SHOWN EXTENDED POSITION

### ELUMOATHQ6C12

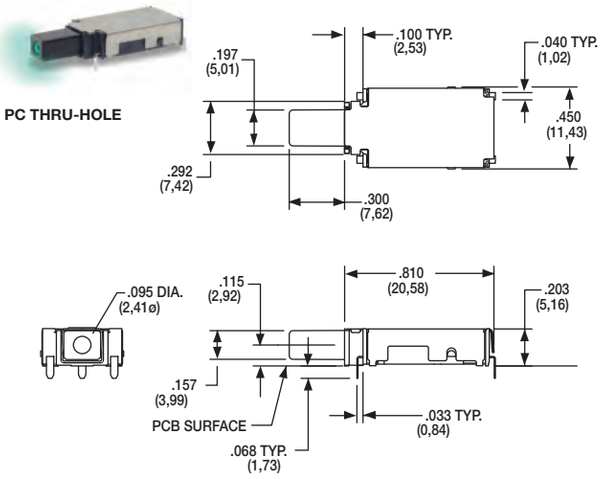


ACTUATOR SHOWN EXTENDED POSITION

### ELUMEESAQ3C22

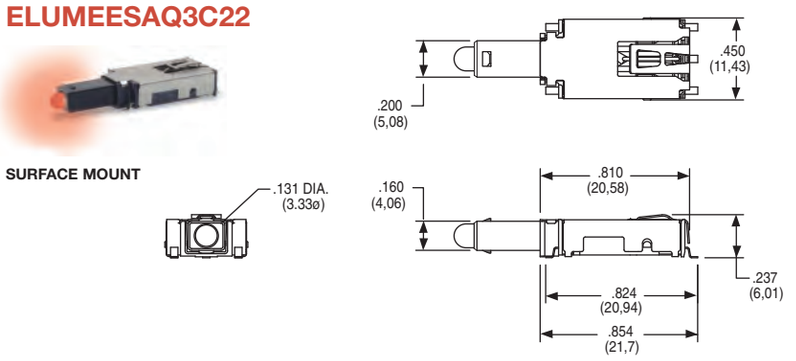


ACTUATOR SHOWN EXTENDED POSITION

## DESIGNATION

E L U M

**ELUM** ELUM SERIES, Illuminated Latching Pushbutton

## SWITCH FUNCTION

| OPTION CODE | NO. OF POLES | POSITION 1 SWITCH FUNCTION | POSITION 1 CONNECTED TERMINALS | POSITION 2 SWITCH FUNCTION | POSITION 2 CONNECTED TERMINALS | SCHEMATIC |
|---|---|---|---|---|---|---|
| OA / OC | SP Momentary | ON | 3 – 4 | ON (Mom.) | 3 – 2 | SPDT: 3 C, 4 NC, NO 2; 5, 1; + Anode – Cathode |
| EE | SP Latching (Push-Push) | ON | 3 – 4 | ON | 3 – 2 | |

For SPST N.O. function, only terminals 3 & 2 are used.
For SPST N.C. function, only terminals 3 & 4 are used.
Circuit: Make before break

LED pins 1 & 5 are independent of switch function.

NOTE:
For bi-color LED's the polarity must be reversed to alternate the color

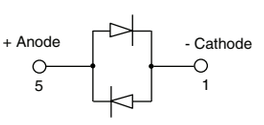


Third Angle Projection

*Dimensions are shown: Inches (mm)*
*Specifications and dimensions subject to change*

# ELUM™ Series
# Right Angle Illuminated Latching Pushbutton

## TERMINAL STYLE

**SA** RIGHT ANGLE, SURFACE MOUNT

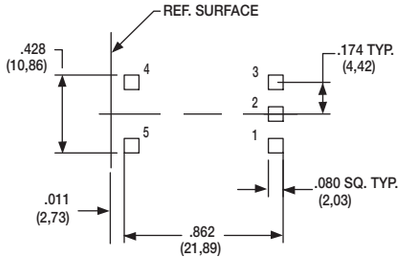


PCB MOUNTING

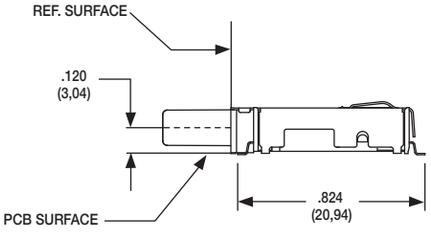


Terminal 5 = LED Anode

**TH** RIGHT ANGLE, PC THRU-HOLE

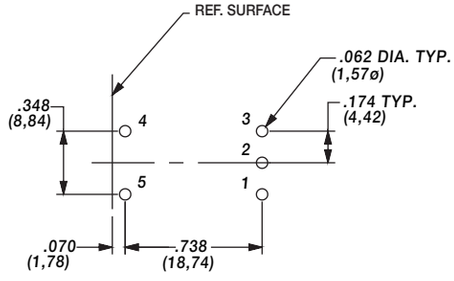


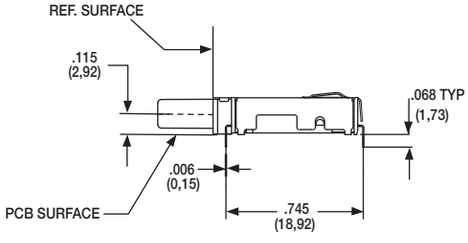


Terminal 5 = LED Anode

## CONTACT MATERIAL

| OPTION CODE | CONTACT MATERIAL | TERMINAL PLATING | RATINGS |
|---|---|---|---|
| Q | SILVER WITH GOLD FLASH | SILVER | 250 mA |

* Note: See Technical Data section of this catalog for RoHS compliant and compatible definitions and specifications.

FIXED CONTACTS AND TERMINALS: Stainless steel, silver plated with gold flash
MOVABLE CONTACTS: Copper alloy, silver plated with gold flash

**NOTE:** Any models supplied with Q, contact material are RoHS compliant.

## ILLUMINATION

| OPTION CODE | ILLUMINATION TYPE | TYPICAL INTENSITY* MIN | MAX | PEAK WAVELENGTH | Vf Forward Voltage |
|---|---|---|---|---|---|
| | | (mcd) | | (nm) | |
| 0 | Model without illumination | N/A | | N/A | |
| 1 | LED Super White | 4,000 | 5,000 | N/A | 3.5 |
| 2 | LED Bi-Color – Red (Green) | 10 | 20 | 635/565 | 2.0 |
| 3 | LED Red | 4 | 8 | 700 | 2.0 |
| 5 | LED Amber | 35 | 50 | 610 | 2.0 |
| 6 | LED Green | 35 | 50 | 565 | 2.0 |
| 7 | LED Super Blue | 800 | 1,500 | 470 | 3.8 |
| 8 | LED Bi-Color – Amber (Green) | 10 | 10 | 585/565 | 2.0 |

*LED FORWARD CURRENT: 20 mA
LED FORWARD VOLTAGE: see chart above
LED REVERSE VOLTAGE: 5.0 V MAX

* For information on specific and custom LED, please contact Customer Service.

Third Angle Projection

*Dimensions are shown: Inches (mm)*
*Specifications and dimensions subject to change*

## ACTUATOR STYLE*

### C02 BLACK WITHOUT WINDOW

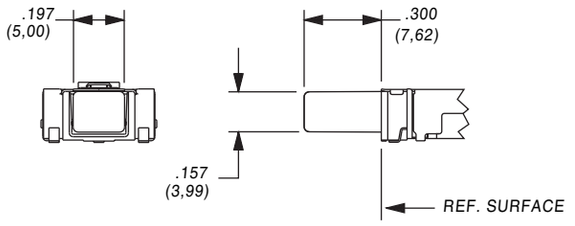


### C12 BLACK WITH WINDOW

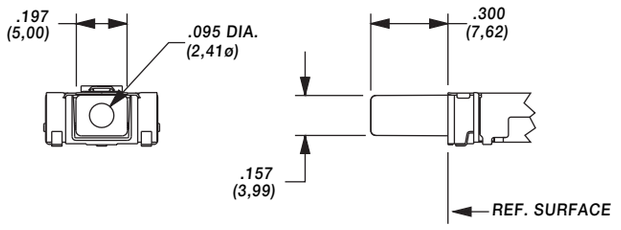


### C22 BLACK WITH WINDOW AND SNAP FEATURE TO ACCEPT CUSTOM CAP

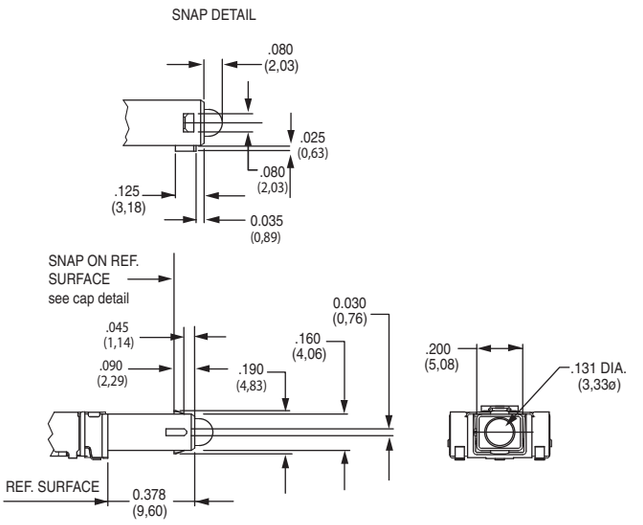


* Custom actuators available, please contact Customer Service.

## FORCE TRAVEL DIAGRAM

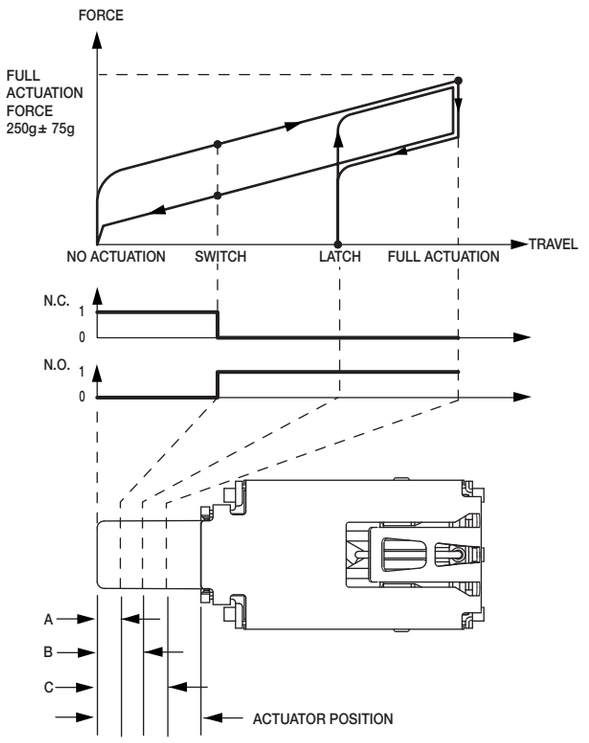


| OA, EE ACTUATOR POSITION | | | |
|---|---|---|---|
| A | SWITCH POINT | .067 ±.020 | 1,7 ± 0.5mm |
| B | LATCH | .131 ±.020 | 3,3 ± 0.5mm |
| C | FULL ACTUATION | .200 ±.020 | 5,1 ± 0.5mm |

| OC ACTUATOR POSITION | | | |
|---|---|---|---|
| A | SWITCH POINT | .067 ±.020 | 1,7 ± 0.5mm |
| C | FULL ACTUATION | .098 ±.020 | 2,5 ± 0.5mm |

## TAPE & REEL

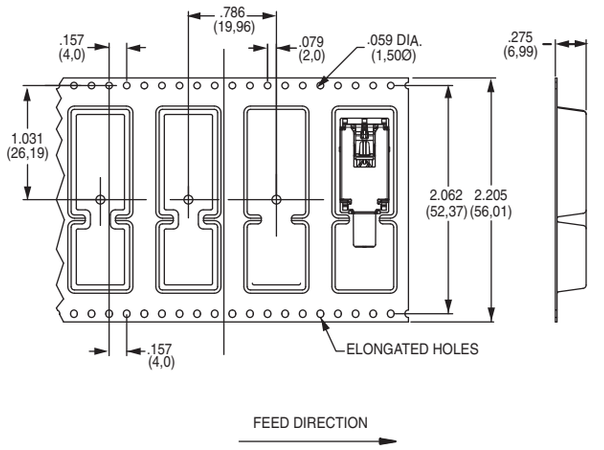


Third Angle Projection

*Dimensions are shown: Inches (mm)*
*Specifications and dimensions subject to change*

# ELUM™ Series
# Right Angle Illuminated Latching Pushbutton

## AVAILABLE HARDWARE

**Cap**

**PART NO.**

**957C00000** High temperature black cap with universal standby symbol

**956C02000** High temperature black cap with no symbol

Material: 4/6 Nylon SMT compatible

**Cap**

**PART NO.**

**181D01000** Paint and Laser Etched with black paint and universal standby symbol

Material: Clear polycarbonate

**Cap**

**PART NO.**

**181D00000** Paint and laser etched with white paint underlay and black paint with universal standby symbol.

Material: Clear polycarbonate

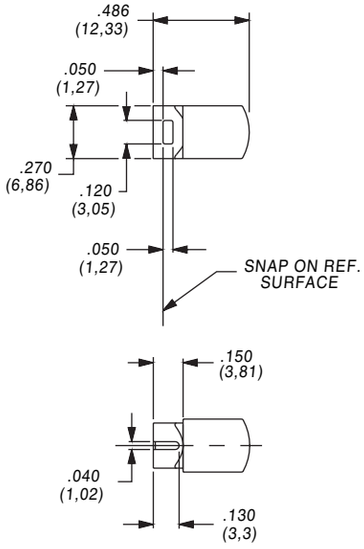


**NOTE:** Caps are for use with the C22 actuator style. Other colors and symbols available, consult Customer Service Center.

## CAP INSTALLATION

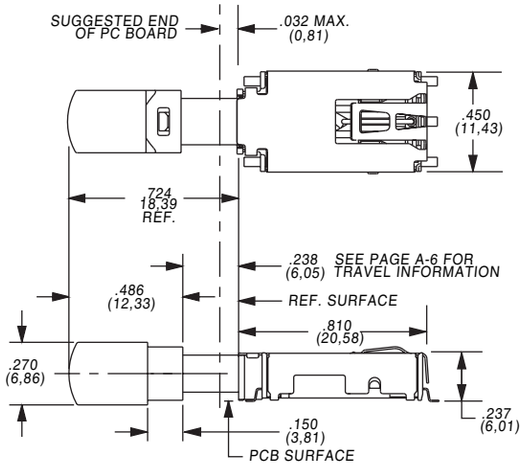


VIEW WITH 957C CAP INSTALLED

Third Angle Projection

*Dimensions are shown: Inches (mm)*
*Specifications and dimensions subject to change*

# EP Series
# Sealed Tiny Pushbutton Switches

## *Features/Benefits*

- ***Sealed against solder & cleaning processes***
- ***Thru-hole and surface mount models***
- ***Snap-fitting actuator accepts standard caps***
- ***Tape & reel packaging available***
- ***RoHS compliant models available***

Models Available

## *Typical Applications*

- ***Telecommunications and networking equipment***
- ***Computers and peripherals***
- ***Instrumentation and controls***

## Specifications

CONTACT RATING: B contact material: 0.4 VA max. @ 20 V AC or DC max. See page A-13 for additional ratings.

ELECTRICAL LIFE: EP11, EP21 models: 60,000 make-and-break cycles at full load. EP12 models: 30,000 cycles.

CONTACT RESISTANCE: Below 20 mΩ typ. initial @ 2-4 V DC, 100 mA, for both silver and gold plated contacts.

INSULATION RESISTANCE: $10^9$ Ω min.

DIELECTRIC STRENGTH: 1000 Vrms min. @ sea level.

OPERATING TEMPERATURE: –30°C to 85°C.

SOLDERABILITY: Per MIL-STD-202F method 208D, or EIA RS-186E method 9 (1 hour steam aging).

DEGREE OF PROTECTION: IP57; Protection against harmful dust deposit, full-scale voltage protection, temporary immersion.

PACKAGING: Surface mount switches standard in anti-static tape and reel packaging per EIA 481-3, see page A-14 for drawings and reel information. Tape and cover strip are conductive for use near statically sensitive components, consult Customer Service Center.

## Materials

CASE & BUSHING: High temperature material, glass filled nylon 4/6, flame retardant, heat stabilized (UL 94V-0) on EP11 / EP12 models; glass filled nylon 6/6 on EP21.

PLUNGER: Thermoplastic polyester or glass filled nylon (UL 94V-0), with internal o-ring seal. SA surface mount: High temperature material, glass filled LCP (UL 94V-0).

SWITCH SUPPORT: Brass, matte-tin plated.

CONTACTS & TERMINALS: B contact material: Copper alloy, with gold plate over nickel plate. See page A-13 for additional contact materials.

TERMINAL SEAL: Epoxy.

**NOTE:** Any models supplied with Q, B, P, S, R or G contact material are RoHS compliant.

**NOTE:** Specifications and materials listed above are for switches with standard options. For information on specific and custom switches, consult Customer Service Center.

**CAUTION:** PC mounting layouts and pads as shown are designed to be compatible with the latest equipment and reflow techniques. Care should be taken in the design and location of PC lands to suit individual needs. Orientation relative to reflow direction may significantly impact solder joint integrity.

## Build-A-Switch

To order, simply select desired option from each category and place in the appropriate box. Available options are shown and described on pages A-10 thru A-14. For additional options not shown in catalog, consult Customer Service Center. All models are process sealed to withstand machine soldering temperatures and pressure wash cleaning methods.

**Switch Function**
- **EP11** SPST Off-Mom.
- **EP12** SPDT On-Mom.
- **EP21** DPST Off-Mom.

**Plunger**
- **S** .215" high
- **S1** .110" high
- **S2** .465" high
- **FP** Flush
- **R** Snap-fitting, .215 high

**Bushing**
- **D1** Unthreaded

**Terminations**
- **A** Right angle, PC thru-hole
- **C** PC Thru-hole
- **AV** Vertical right angle, PC thru-hole
- **AV3** Vertical right angle, snap-in, PC thru-hole
- **SA** Right angle, surface mount
- **SA1** Right angle, surface mount rear facing
- **V3** Vertical mount, v-bracket
- **V31** Vertical mount, v-bracket, snap-in (EP11 & EP12 only)
- **W** Wire wrap

**Contact Material**
- **B** Gold
- **P** Gold, matte-tin
- **Q** Silver
- **S** Silver, matte-tin
- **G** Gold over silver
- **R** Gold over silver, matte tin

**Seal**
- **E** Epoxy

*Dimensions are shown: Inches (mm)*
*Specifications and dimensions subject to change*

# EP Series
# Sealed Tiny Pushbutton Switches

## SWITCH FUNCTION

| NO. POLES | MODEL NO. | SWITCH FUNCTION POS. 1 (C&K marking on opposite side) | SWITCH FUNCTION POS. 2 (C&K marking on opposite side) | CONNECTED TERMINALS POS. 1 (C&K marking on opposite side) | CONNECTED TERMINALS POS. 2 (C&K marking on opposite side) | SCHEMATIC |
|---|---|---|---|---|---|---|
| SP | EP11 | OFF | MOM. | OPEN | 1-3 | SPST 1 3 |
| | EP12 | ON | MOM. | 2-1 | 2-3 | SPDT NC 1 2 (COMM) 3 NO |

### SPDT

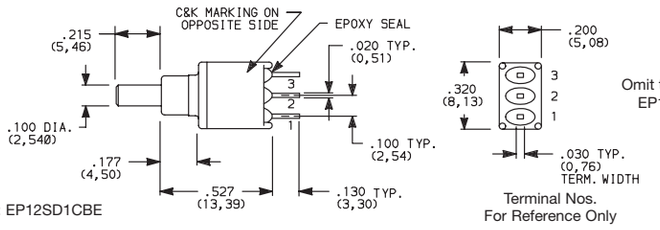


Omit terminal 2 for EP11 models.

Part number shown: EP12SD1CBE

| | | | | | | |
|---|---|---|---|---|---|---|
| DP | EP21 | OFF | MOM. | OPEN | 1-3,4-6 | DPST 1 3 4 6 |

### DPST

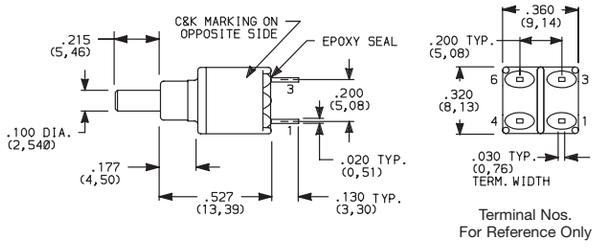


Part number shown: EP21SD1CBE

MOM. = Momentary

All models cULus with all options when ordered with G, Q, R or S contact material.

## PLUNGER

**S** .215" HIGH

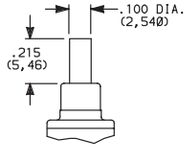


**S1** .110" HIGH

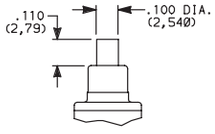


**S2** .465" HIGH

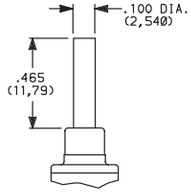


**FP** FLUSH PLUNGER

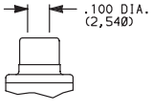


**R** SNAP-FITTING

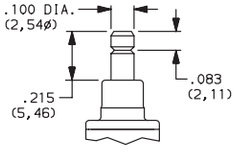


S1& S2 actuators are not available with EP12 & EP21 models.

FP & R actuators are not available with EP21 model.

**NOTE:** Caps available for plunger options, see page A-14.

## BUSHING

**D1** UNTHREADED

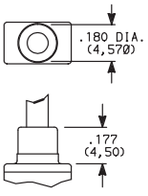


**NOTE:** Internal actuator o-ring standard.

Third Angle Projection

*Dimensions are shown: Inches (mm)*
*Specifications and dimensions subject to change*

## TERMINATIONS

### C PC THRU-HOLE

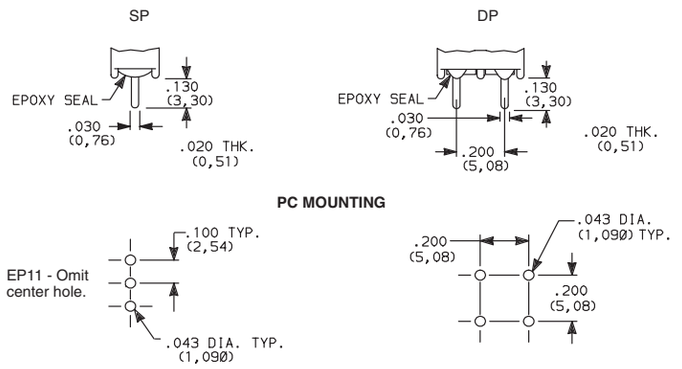


**SP and DP**

### W WIRE WRAP

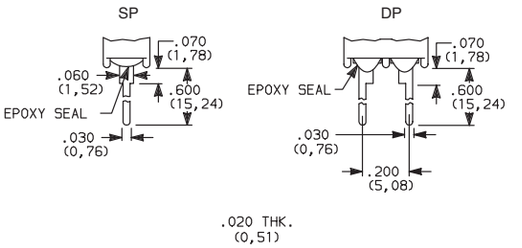


**SP and DP**

### A RIGHT ANGLE, PC THRU-HOLE

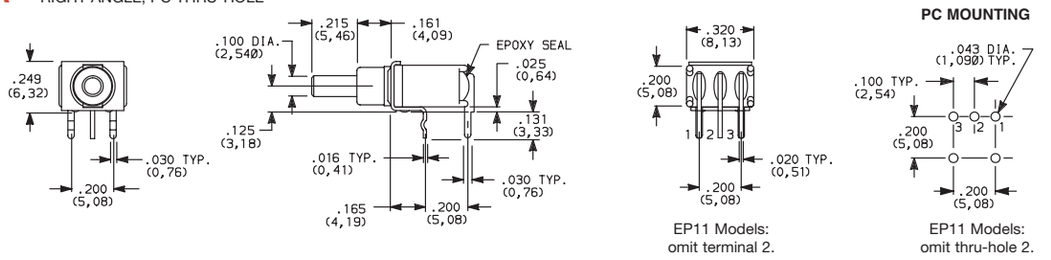


EP11 Models: omit terminal 2.

EP11 Models: omit thru-hole 2.

EP12SD1ABE
**SPDT**

### A RIGHT ANGLE, PC THRU-HOLE

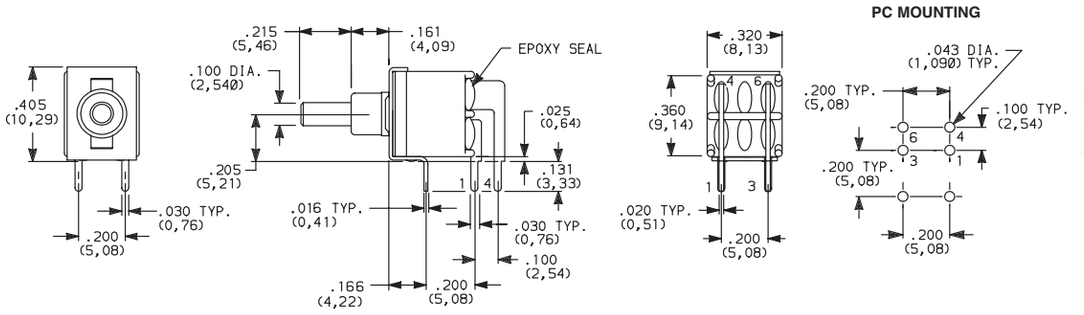


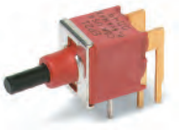

EP21SD1ABE
**DPST**

### AV VERTICAL RIGHT ANGLE, PC THRU-HOLE

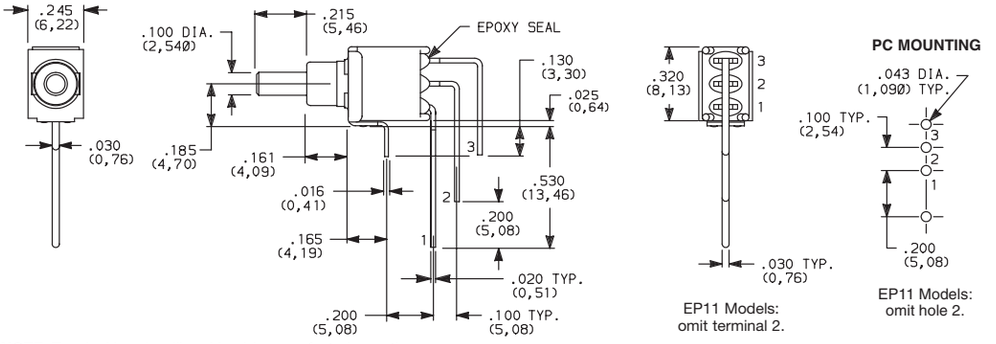


EP11 Models: omit terminal 2.

EP11 Models: omit hole 2.

EP12SD1AVBE
**SPDT**

**NOTE:** Terminal bend radii and lead-in manufacturing option.

Third Angle Projection

*Dimensions are shown: Inches (mm)*
*Specifications and dimensions subject to change*

# EP Series
# Sealed Tiny Pushbutton Switches

## TERMINATIONS

### AV VERTICAL RIGHT ANGLE, THRU-HOLE

EP21SD1AVBE
**DPST**

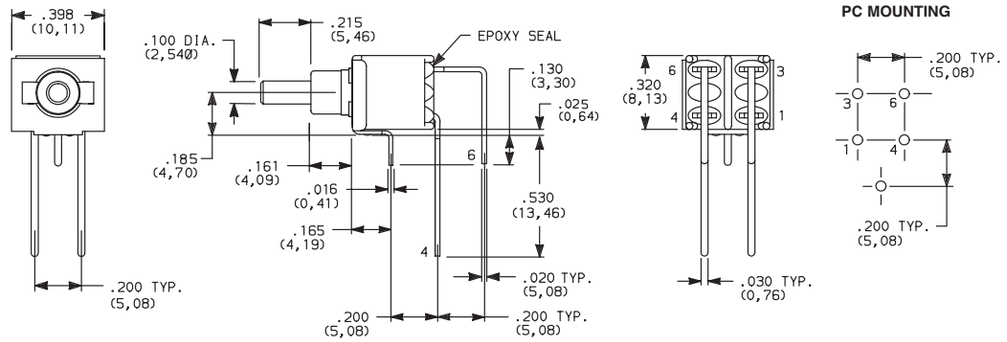


**NOTE:** Terminal bend radii and lead-in manufacturing option.

### AV3 VERTICAL RIGHT ANGLE, SNAP-IN, PC THRU-HOLE

EP12SD1AV3BE
**SPST**

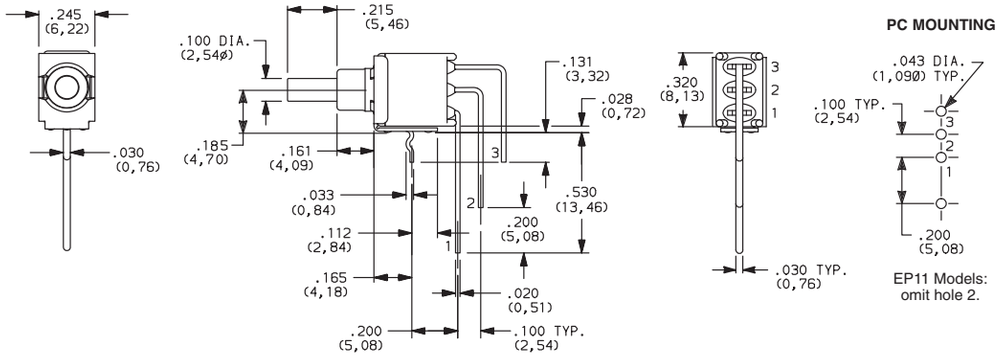


### SA RIGHT ANGLE, SURFACE MOUNT

EP12SD1SAPE
**SPDT**

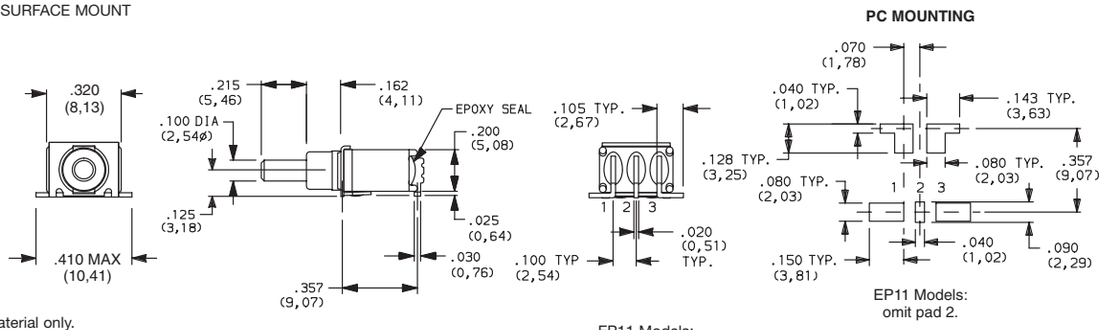


Available with P contact material only.
Not Available on DPST models.

### SA1 RIGHT ANGLE, SURFACE MOUNT

EP12SD1SA1BE
**SPDT**

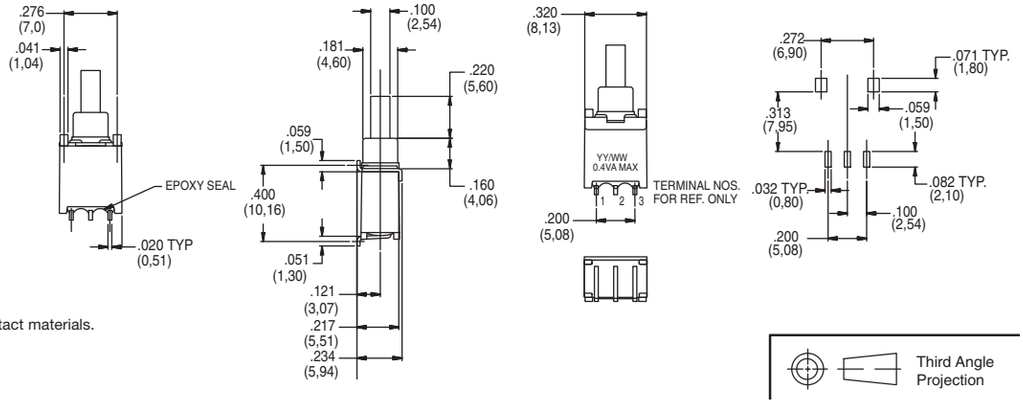


SA1 is only available with B and P contact materials.
Not Available on DPST models.

Third Angle Projection

*Dimensions are shown: Inches (mm)*
*Specifications and dimensions subject to change*

## TERMINATIONS

**V3** VERTICAL MOUNT, V-BRACKET

**V31** VERTICAL MOUNT, V-BRACKET, SNAP-IN

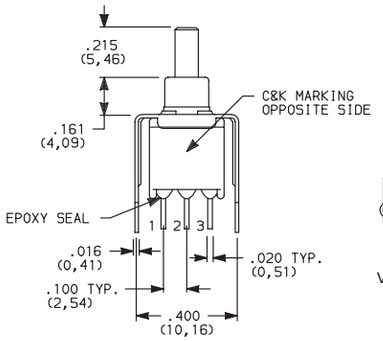


EP11 Models:
omit terminal 2.

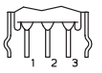


V31 SNAP-IN

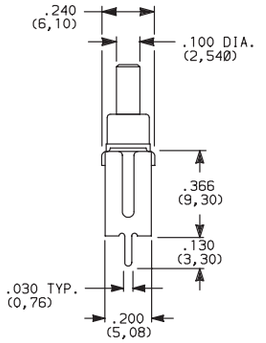


**PC MOUNTING**

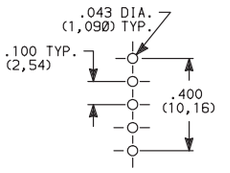


EP11 Models:
omit centerhole.

EP12SD1V3BE
**SPDT**

**V3** VERTICAL MOUNT, V-BRACKET

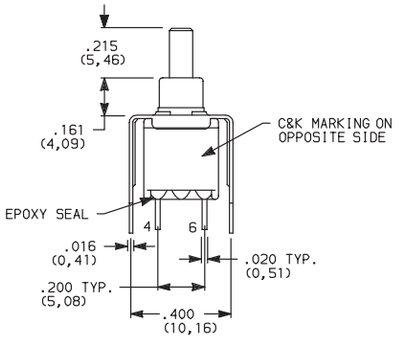


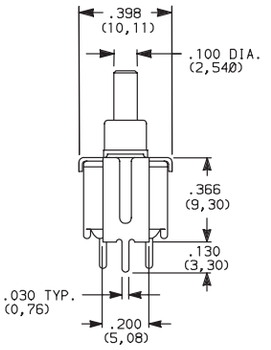


**PC MOUNTING**

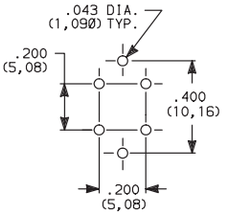

EP21SD1V3BE
**DPST**

## CONTACT MATERIAL

| OPTION CODE | CONTACT MATERIAL | TERMINAL PLATING | RATINGS | |
|---|---|---|---|---|
| B | GOLD [1] | GOLD [1] | LOW LEVEL/DRY CIRCUIT | 0.4 VA MAX. @ 20 V AC OR DC MAX. |
| P | | MATTE-TIN [6] | | |
| Q | SILVER [4,5] | SILVER [5] | POWER | 1 AMP @ 120 V AC OR 28 V DC. |
| S | | MATTE-TIN [6] | | |
| G | GOLD OVER SILVER [2,3] | GOLD [3] | LOW LEVEL/DRY CIRCUIT OR POWER | 0.4 VA MAX @ 20 V AC OR DC MAX. OR 1 AMP @ 120 V AC OR 28 V DC. |
| R | | MATTE-TIN [6] | | |

* Note: See Technical Data section of this catalog for RoHS compliant and compatible definitions and specifications.

[1] CONTACTS & TERMINALS: Copper alloy, with gold plate over nickel plate.
[2] END CONTACTS: Coin silver, with gold plate over nickel plate.
[3] CENTER CONTACTS & ALL TERMINALS: Copper alloy, with gold plate over nickel plate.
[4] END CONTACTS: Coin silver, silver plated.
[5] CENTER CONTACT & ALL TERMINALS: Copper alloy, silver plated.
[6] TERMINALS: Copper alloy, with matte tin over nickel plate.

**NOTE:** Any models supplied with Q, B P, S ,R or G contact material are RoHS compliant.

All models c UL us with all options when ordered with G, S, R or Q contact material.

## SEAL

**E** EPOXY SEAL

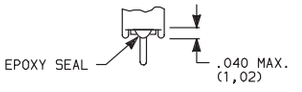


Third Angle Projection

*Dimensions are shown: Inches (mm)*
*Specifications and dimensions subject to change*

# EP Series
# Sealed Tiny Pushbutton Switches

## AVAILABLE HARDWARE

**Cap**

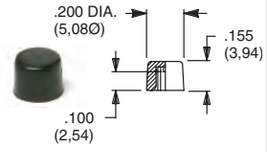


**PART NO.**

**508101000** WHITE
**508102000** BLACK
**508103000** RED

Material: Nylon
Finish: Gloss

Not for use on S1 plunger

**Cap**

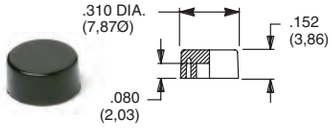


**PART NO.**

**465801000** WHITE
**465802000** BLACK
**465803000** RED

Material: Nylon
Finish: Gloss

Not for use on S1 plunger

**Cap**
**Compatible with snap-fitting plungers EP11 & EP12 Models. R option only.**

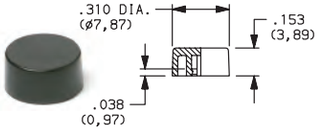


**PART NO.**

**585A01000** WHITE
**585A02000** BLACK
**585A03000** RED

Material: Nylon
Finish: Gloss

**Cap**
**Compatible with snap-fitting plungers EP11 & EP12 Models. R option only.**

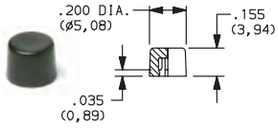


**PART NO.**

**785A01000** WHITE
**785A02000** BLACK
**785A03000** RED

Material: Nylon
Finish: Gloss

**NOTE:** Other colors available, consult Customer Service Center.

## TAPE & REEL

For part number EPXX-SA/SA1

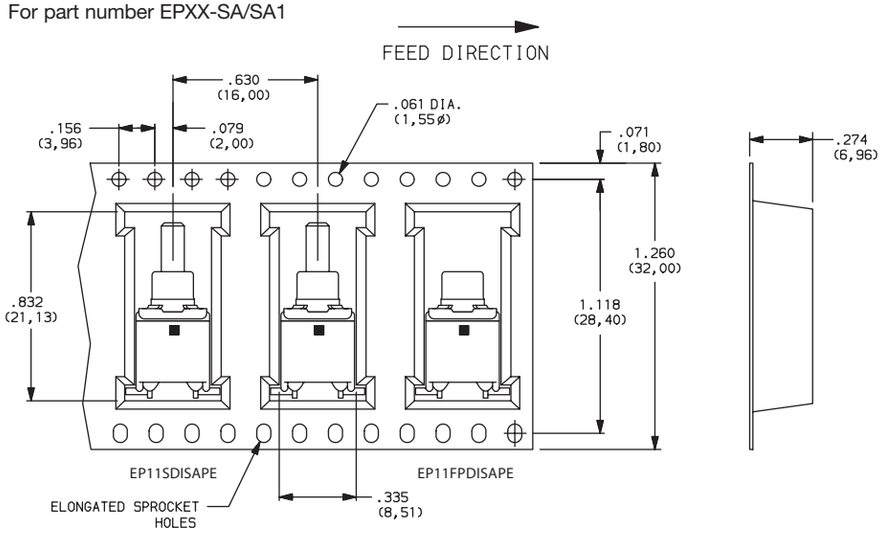


| REEL INFORMATION | |
|---|---|
| **OUTSIDE DIAMETER** | 13.00 (330,0) |
| **PILOT HOLE** | .512 (13,0) |
| **QUANTITY PER REEL** | 600 |

Third Angle Projection

*Dimensions are shown: Inches (mm)*
*Specifications and dimensions subject to change*

# TP Series
# Tiny Pushbutton Switches

## *Features/Benefits*

- ***Subminiature size—capable of switching 1 AMP***
- ***Vertical & right angle terminations***
- ***PC & panel mount models***
- ***Snap-in front panel mounting available***
- ***Epoxy terminal seal-compatible with bottom wash cleaning***
- ***RoHS compliant models available***

Models Available

## *Typical Applications*

- ***Telecommunications and networking equipment***
- ***Computers and peripherals***
- ***Instrumentation and controls***

## Specifications

CONTACT RATING: B contact material: 0.4 VA max. @ 20 V AC or DC max. Q contact material: 1 AMP @ 120 V AC or 28 V DC. See page A-19 for additional ratings.

ELECTRICAL LIFE: TP11, TP21 MODELS: 60,000 make-and-break cycles at full load. TP12 MODELS: 30,000 cycles.

CONTACT RESISTANCE: Below 20 mΩ typ. initial @ 2-4 V DC, 100 mA, for both silver and gold plated contacts.

INSULATION RESISTANCE: $10^9\Omega$ min.

DIELECTRIC STRENGTH: 1000 Vrms min. @ sea level.

OPERATING TEMPERATURE: –30°C to 85°C.

SOLDERABILITY: Per MIL-STD-202F method 208D, or EIA RS-186E method 9 (1 hour steam aging).

**NOTE:** Any models supplied with Q, B, P, R or G contact material are RoHS compliant.

**NOTE:** Specifications and materials listed above are for switches with standard options. For information on specific and custom switches, consult Customer Service Center.

## Materials

CASE: Glass filled nylon 4/6 or 6/6, flame retardant, heat stabilized or diallyl phthalate (DAP), (UL 94V-0).

PLUNGER: Thermoplastic polyester (UL 94V-0).

CAP & FRAME: Nylon, black standard.

BUSHING: Brass, nickel plated.

HOUSING: Stainless steel.

SWITCH SUPPORT: Brass, matte-tin plated.

END CONTACTS: B contact material: Copper alloy, with gold plate over nickel plate. Q contact material: Coin silver, silver plated. See page A-19 for additional contact materials.

CENTER CONTACT & ALL TERMINALS: B contact material: Copper alloy, with gold plate over nickel plate. Q contact material: Copper alloy, silver plated. See page A-19 for additional contact materials.

TERMINAL SEAL: Epoxy. Refer to soldering and cleaning in Technical Data Chapter

HARDWARE: Nut & Locking Ring: Brass nickel plated. Lockwasher: Steel, nickel plated.

## Build-A-Switch

To order, simply select desired option from each category and place in the appropriate box. Available options are shown and described on pages A-16 thru A-20. For additional options not shown in catalog, consult Customer Service Center. All models have epoxy terminal seal and are compatible with all “bottom-wash” PCB cleaning methods.

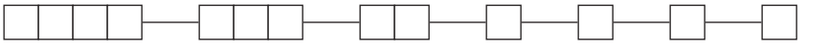

**Switch Function**
- **TP11** SPST Off-Mom.
- **TP12** SPDT On-Mom.
- **TP21** DPST Off-Mom.

**Actuator or Bushing**
- **SH** .155" high plunger, threaded, .220" high bushing, flat
- **SH8** .155" high plunger, unthreaded, .220" high bushing, round
- **SH9** .155" high plunger, unthreaded, .220" high bushing, flat
- **J81** Snap-in with frame
- **LT** .215" high plunger, threaded, .310" high bushing, flat
- **LT9** .215" high plunger, unthreaded, .310" high bushing, flat
- **MS9** .130" high plunger, .020" high bushing, round

**Terminations**
- **A** Right angle, PC thru-hole
- **C** PC Thru-hole
- **Z** Solder lug
- **AV** Vertical right angle, PC thru-hole
- **V3** Vertical mount, v-bracket
- **W** Wire wrap

**Contact Material**
- **B** Gold
- **P** Gold, matte-tin
- **Q** Silver
- **G** Gold over silver
- **R** Gold over silver, matte-tin

**Seal**
- **E** Epoxy

**Cap Color**
- **2** Black
- **NONE** Models with no cap
- **1** White

**Frame Color**
- **2** Black
- **NONE** Models with no frame

*Dimensions are shown: Inches (mm)*
*Specifications and dimensions subject to change*

# TP Series
# Tiny Pushbutton Switches

## SWITCH FUNCTION

| NO. POLES | MODEL NO. | SWITCH FUNCTION POS. 1 | SWITCH FUNCTION POS. 2 | CONNECTED TERMINALS POS. 1 | CONNECTED TERMINALS POS. 2 | SCHEMATIC |
|---|---|---|---|---|---|---|
| | | C&K marking on opposite side | | C&K marking on opposite side | | |
| SP | TP11 | OFF | MOM. | OPEN | 1-3 | SPST 1 3 |
| | TP12 | ON | MOM. | 2-1 | 2-3 | SPDT NC 1 2 (COMMON) 3 NO |

### SPDT

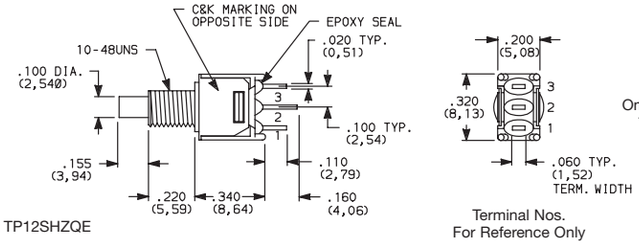


Omit terminal 2 for TP11 models.

Part number shown: TP12SHZQE

| | | | | | | |
|---|---|---|---|---|---|---|
| DP | TP21 | OFF | MOM. | OPEN | 1-3,4-6 | DPST 1 3 4 6 |

### DPST

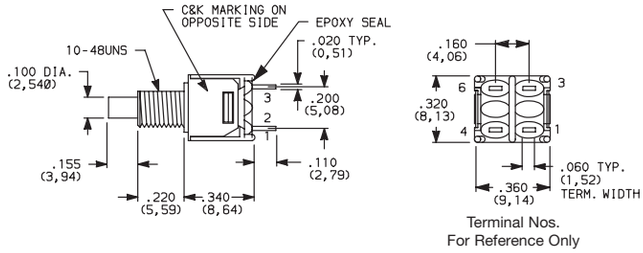


Part number shown: TP21SHZQE

MOM. = Momentary

All models ® with all options when ordered with G, Q or R contact material.

## ACTUATOR—SNAP-IN FRONT MOUNT

CAP COLOR
ACTUATOR OR BUSHING
FRAME COLOR

### J81 SNAP-IN WITH FRAME

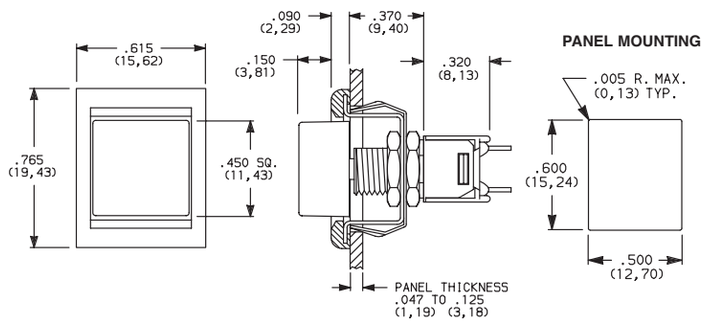


| OPTION CODE | CAP COLOR |
|---|---|
| 2 | BLACK |
| 1 | WHITE |

| OPTION CODE | FRAME COLOR |
|---|---|
| 2 | BLACK |
| NONE | No Frame Color (J80 option) |

Cap and Frame Finish: matte. Other colors available, consult Customer Service Center.

**NOTE:** Available with Z, C, or W terminations.

**NOTE:** Caps & frames available separately, see page A-20.

Third Angle Projection

*Dimensions are shown: Inches (mm)*
*Specifications and dimensions subject to change*

**SH** .155" HIGH PLUNGER, .220" HIGH BUSHING, THREADED, FLAT

**SH8** .155" HIGH PLUNGER, .220" HIGH BUSHING, UNTHREADED

**SH9** .155" HIGH PLUNGER, .220" HIGH BUSHING, UNTHREADED, FLAT

**LT** .215" HIGH PLUNGER, .310" HIGH BUSHING, THREADED

**LT9** .215" HIGH PLUNGER, .310" HIGH BUSHING, UNTHREADED

**MS9** .130" HIGH PLUNGER

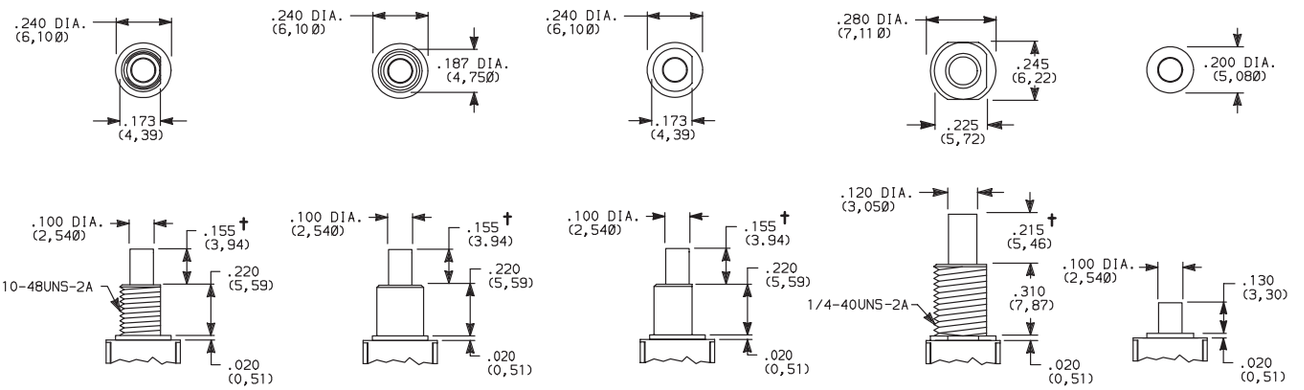


Standard with Z, C, W terminations.

Standard with A, AV, V3 terminations.

Not available with Z terminations.

† Subtract .016 (0,41) for models with A, AV or V3 terminations.

**NOTE:** Caps available for plunger options, see page A-20.

## PANEL MOUNTING

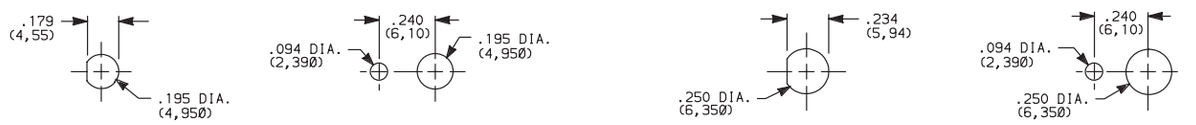


Without locking ring | With standard locking ring | Without locking ring | With standard locking rin

**NOTE:** One mounting nut, locking ring and lockwasher supplied standard with 10-48 threaded bushings (two nuts with 1/4-40 bushings). Optional mounting nut and locking ring styles and finishes available separately, see section "Technical Data and Additional Hardware".

## TERMINATIONS

**C** PC THRU-HOLE

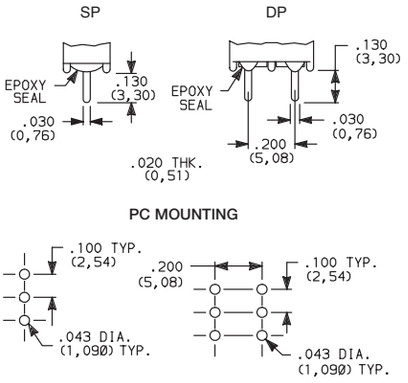


Omit center holes for TP11 models

**Z** SOLDER LUG

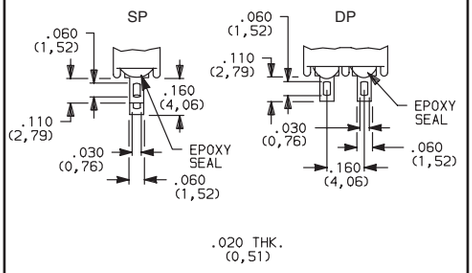


Not available with MS9 bushing or P or R contact material.

**W** WIRE WRAP

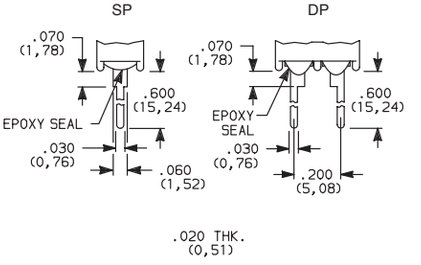


Third Angle Projection

*Dimensions are shown: Inches (mm)*
*Specifications and dimensions subject to change*

# TP Series
# Tiny Pushbutton Switches

## TERMINATIONS

### A RIGHT ANGLE, PC THRU-HOLE

TP12SH9ABE
**SPDT**

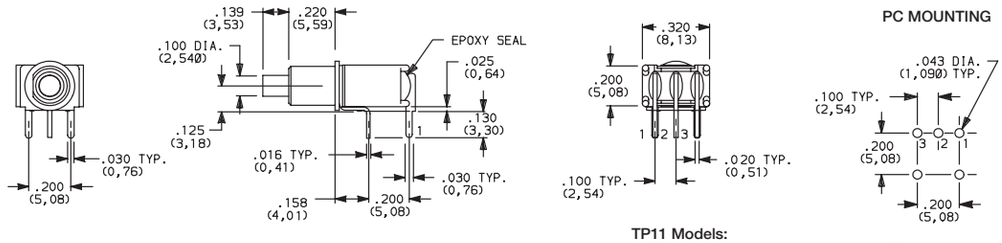


TP11 Models: omit terminal 2.

TP11 Models: omit hole 2.

### A RIGHT ANGLE, PC THRU-HOLE

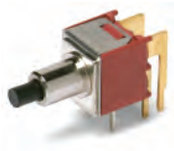

TP21SH9ABE
**DPST**

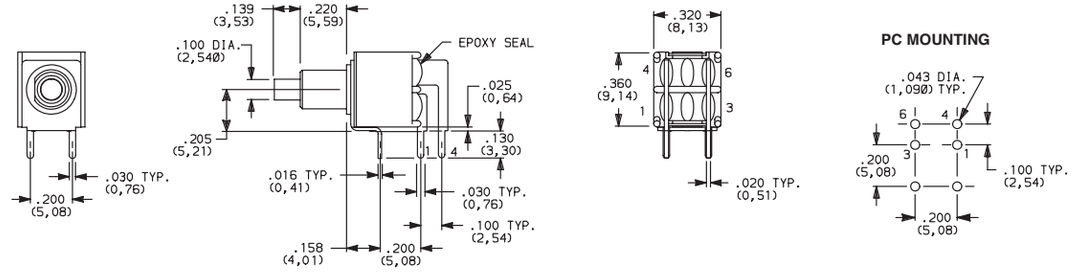


### AV VERTICAL RIGHT ANGLE, PC THRU-HOLE

TP12SH9AVBE
**SPDT**

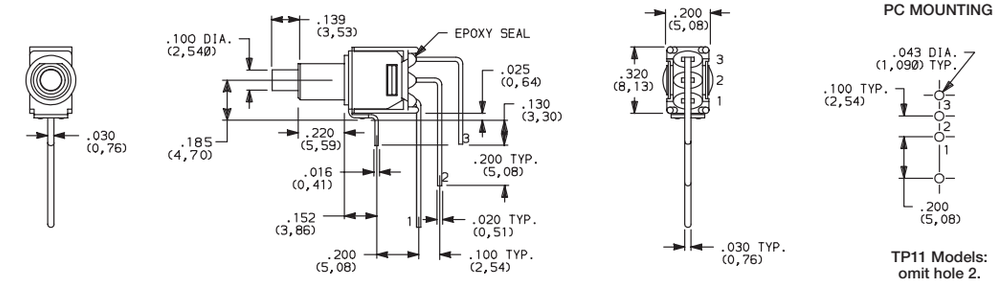


TP11 Models: omit terminal 2.

TP11 Models: omit hole 2.

**NOTE:** Terminal bend radii and lead-in manufacturing option.

### AV VERTICAL RIGHT ANGLE, PC THRU-HOLE

TP21SH9AVBE
**DPST**

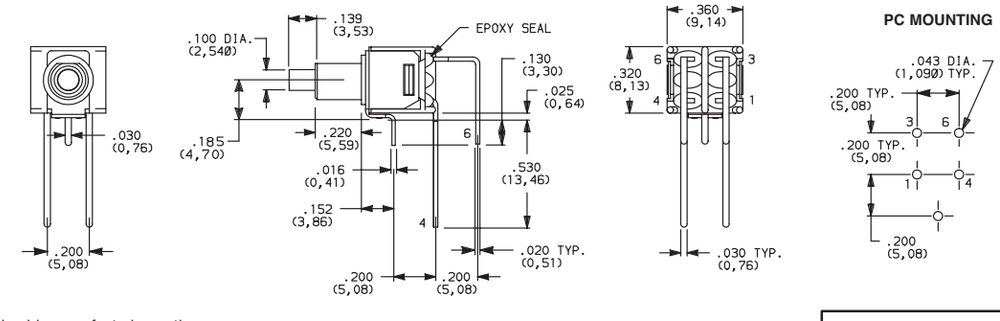


**NOTE:** Terminal bend radii and lead-in manufacturing option.

Third Angle Projection

*Dimensions are shown: Inches (mm)*
*Specifications and dimensions subject to change*

## TERMINATIONS

**V3** VERTICAL MOUNT, V-BRACKET

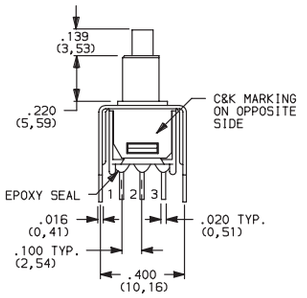


**TP11 Models: omit terminal 2.**

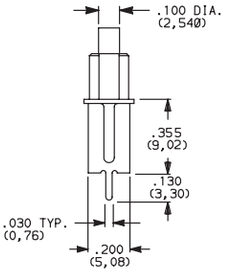


**PC MOUNTING**

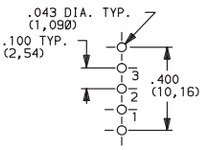


TP11 Models: omit hole 2.

TP12SH9V3BE
**SPDT**

**V3** VERTICAL MOUNT, V-BRACKET

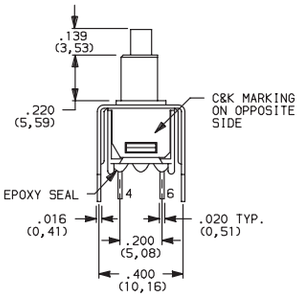


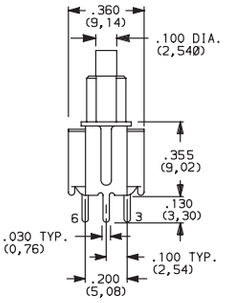


**PC MOUNTING**

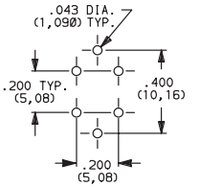

TP21SH9V3BE
**DPST**

## CONTACT MATERIAL

| OPTION CODE | CONTACT MATERIAL | TERMINAL PLATING | RATINGS | |
|---|---|---|---|---|
| B | GOLD [1] | GOLD [1] | LOW LEVEL/DRY CIRCUIT | 0.4 VA MAX. @ 20 V AC OR DC MAX. |
| P | | MATTE-TIN [6] | | |
| Q | SILVER [4,5] | SILVER [5] | POWER | 1 AMP @ 120 V AC OR 28 V DC. |
| G | GOLD OVER SILVER [2,3] | GOLD [3] | LOW LEVEL/DRY CIRCUIT OR POWER | 0.4 VA MAX @ 20 V AC OR DC MAX. OR 1 AMP @ 120 V AC OR 28 V DC. |
| R | | MATTE-TIN [6] | | |

* Note: See Technical Data section of this catalog for RoHS compliant and compatible definitions and specifications.

[1] CONTACTS & TERMINALS: Copper alloy, with gold plate over nickel plate.
[2] END CONTACTS: Coin silver, with gold plate over nickel plate.
[3] CENTER CONTACTS & ALL TERMINALS: Copper alloy, with gold plate over nickel plate.
[4] END CONTACTS: Coin silver, silver plated.
[5] CENTER CONTACT & ALL TERMINALS: Copper alloy, silver plated.
[6] TERMINALS: Copper alloy, with matte-tin over nickel plate.

**NOTE:** Any models supplied with P, R, Q, B or G contact material are RoHS compliant.

All models with all options when ordered with R, G, or Q contact material.
B contact material standard with A, AV, V3 & W terminations.
Q contact material standard with C & Z terminations
P, R contact materials not available with Z terminations.

## SEAL

**E** EPOXY SEAL

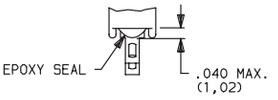


Third Angle Projection

*Dimensions are shown: Inches (mm)*
*Specifications and dimensions subject to change*

# TP Series
# Tiny Pushbutton Switches

## AVAILABLE HARDWARE

**Cap, .100" DIA. Plungers**

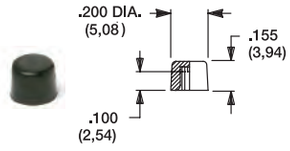


**PART NO.**

**508101000** WHITE
**508102000** BLACK

Material: Nylon
Finish: Gloss

**Cap, .100" DIA. Plungers**
**(Recommended for S9 plunger)**

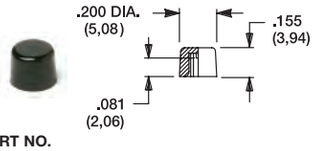


**PART NO.**

**538701000** WHITE
**538702000** BLACK

Material: Nylon
Finish: Gloss

**Cap, .100" DIA. Plungers**

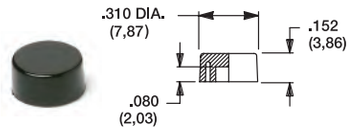


**PART NO.**

**465801000** WHITE
**465802000** BLACK

Material: Nylon
Finish: Gloss

**Cap, .120" DIA. Plungers**

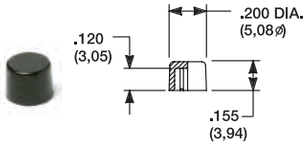


**PART NO.**

**708901000** WHITE
**708902000** BLACK

Material: Nylon
Finish: Gloss

**Cap, .120" DIA. Plungers**

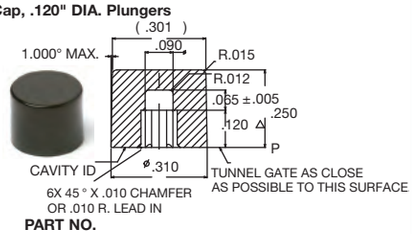


**PART NO.**

**891D01000** WHITE
**891D02000** BLACK

Material: Nylon
Finish: Gloss

**Cap, J81 option only**

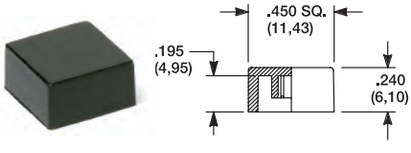


**PART NO.**

**484601000** WHITE
**484602000** BLACK

Material: Nylon
Finish: Gloss

**PART NO.**

**798201000** WHITE
**798202263** BLACK

Material: Nylon
Finish: Matte

**NOTE:** Additional nuts, locking rings and lockwashers available separately, see section "Technical Data and Additional Hardware".
Other cap colors available, consult Customer Service Center.

Frames snap into panel opening and are independent from switch mounting. Accurate positioning of the PC mounted switch relative to the panel opening is necessary to provide proper clearance between actuator and frame. Available in two basic styles and four panel thicknesses .047-.125 in. Material: Nylon. Finish: Matte.

**TYPICAL APPLICATION**

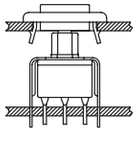

| .047" (1,19) PANEL THK. | .062" (1,57) PANEL THK. | .090" (2,29) PANEL THK. | .125" (3,18) PANEL THK. |
|---|---|---|---|
| **PART NO.** | **PART NO.** | **PART NO.** | **PART NO.** |
| **432502263** | **432602263** | **432702263** | **432802263** BLACK |

### PANEL MOUNTING

For part numbers
432502263, 432602263

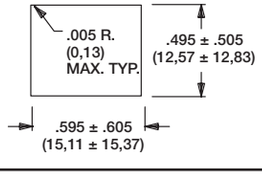


For part numbers
432702263, 432802263

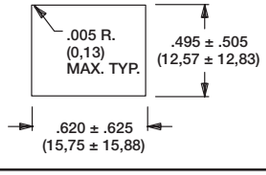


**Panel Inserts**

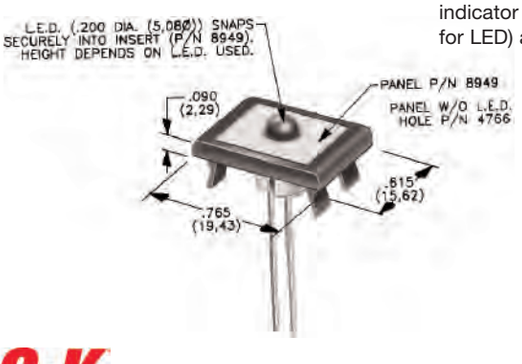


Above frames (part nos. 432XXXXXX) are also available with insert which accepts LED for indicator light assembly. Order insert separately from frame. Blank insert panel (without hole for LED) also available. **LED not included.**

| PANEL INSERT WITH HOLE FOR LED | BLANK PANEL INSERT WITHOUT HOLE FOR LED |
|---|---|
| **PART NO.** | **PART NO.** |
| **894902000** | **476602000** BLACK |

Third Angle Projection

*Dimensions are shown: Inches (mm)*
*Specifications and dimensions subject to change*

# E020 Series
# Sealed Snap-acting Momentary Pushbutton Switches

## *Features/Benefits*

- ***Process sealed with disposable splashproof boot***
- ***Long life contact design***
- ***Snap-fitting plunger available***
- ***RoHS compliant models available***

## *Typical Applications*

- ***Instrumentation***
- ***Telecommunications and networking equipment***
- ***Computers and peripherals***

Models Available

## Specifications

CONTACT RATING: B contact material (EX25 Models): 0.4 VA max. @ 20 V AC or DC max. G contact material (EX21 Models): 1 AMP @120 V AC or 28 V DC or 0.4 VA max. @ 20 V AC or DC max. Note: Break-before-make contacts. Multi-pole contacts do not make and break simultaneously. See page A-26 for additional ratings.

ELECTRICAL LIFE: 60,000 make-and-break cycles at full load.

CONTACT RESISTANCE: Below 50 mΩ typ. initial @ 2–4 V DC, 100 mA, for both silver and gold plated contacts.

INSULATION RESISTANCE: $10^9$Ω min.

DIELECTRIC STRENGTH: 1000 Vrms min. @ sea level.

OPERATING TEMPERATURE: –30°C to 75°C.

CAP INSTALLATION FORCE: 10 lbs. max. permissible.

SOLDERABILITY: Per MIL-STD-202F method 208D, or EIA RS-186E method 9 (1 hour steam aging).

**NOTE:** Any models supplied with P, R, B or G contact material are RoHS compliant.

**NOTE:** Specifications and materials listed above are for switches with standard options. For information on specific and custom switches, consult Customer Service Center.

## Materials

CASE & BUSHING: Glass filled nylon 6/6, flame retardant (UL 94V-0).

PLUNGER: Glass filled nylon or glass filled polyester (PBT) (UL 94V-0).

SWITCH SUPPORT: Brass or steel, matte-tin.

SWITCH SUPPORT RETAINER: Stainless steel.

N.O. & N.C. CONTACTS: EX25 MODELS: B contact material: Copper alloy, with gold plate over nickel plate. EX21 MODELS: G contact material: Coin silver, with gold plate over nickel plate. See page A-26 for additional contact materials.

COMMON CONTACTS & ALL TERMINALS: Copper alloy, with gold plate over nickel plate. See page A-26 for additional contact materials.

TERMINAL SEAL: Epoxy.

DISPOSABLE BOOT: Vinyl splashproof boot supplied standard. Remove and discard only after soldering and cleaning processes are complete.

## Build-A-Switch

To order, simply select desired option from each category and place in the appropriate box. Available options are shown and described on pages A-22 thru A-28. For additional options not shown in catalog, consult our Customer Service Center. All models are process sealed to withstand machine soldering temperatures and pressure wash cleaning methods.

**Switch Function**
- **E121** SPDT On-Mom. 1 Amp
- **E221** DPDT On-Mom. 1 Amp
- **E125** SPDT On-Mom. 0.4VA
- **E225** DPDT On-Mom. 0.4VA

**Plunger**
- **S** .282" high
- **M** .331" high, snap-fitting
- **S1** .332" high

**Bushing**
- **D1** Unthreaded
- **D3** .180" high, unthreaded

**Terminations**
- **A** Right angle, PC thru-hole
- **AV2** Vertical right angle, PC thru-hole
- **C** PC Thru-hole
- **A3** Right angle, snap-in, PC thru-hole
- **AV3** Vertical right angle, snap-in, PC thru-hole
- **V3** .460" high, V-bracket
- **V4** .630" high, V-bracket
- **V6** .460" high, V-bracket
- **V8** .953" high, V-bracket
- **V31** .460" high, snap-in V-bracket
- **V41** .630" high, snap-in V-bracket
- **V61** .460" high, snap-in V-bracket

**Contact Material**
- **B** Gold
- **G** Gold over silver
- **P** Gold, matte-tin
- **R** Gold over silver, matte-tin

**Seal**
- **E** Epoxy and disposable splashproof boot

*Dimensions are shown: Inches (mm)*
*Specifications and dimensions subject to change*

# E020 Series
# Sealed Snap-acting Momentary Pushbutton Switches

## SWITCH FUNCTION

| NO. POLES | MODEL NO. | SWITCH FUNCTION POS. 1 (C&K marking this side) | SWITCH FUNCTION POS. 2 (C&K marking this side) | CONNECTED TERMINALS POS. 1 (C&K marking this side) | CONNECTED TERMINALS POS. 2 (C&K marking this side) | SCHEMATIC |
|---|---|---|---|---|---|---|
| SP | E121 | ON | MOM. | 1-3 | 1-2 | SPDT |
| | E125 | ON | MOM. | | | |
| DP | E221 | ON | MOM. | 1-3,4-6 | 1-2,4-5 | 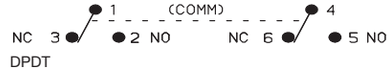 DPDT |
| | E225 | ON | MOM. | | | |

**SPDT**

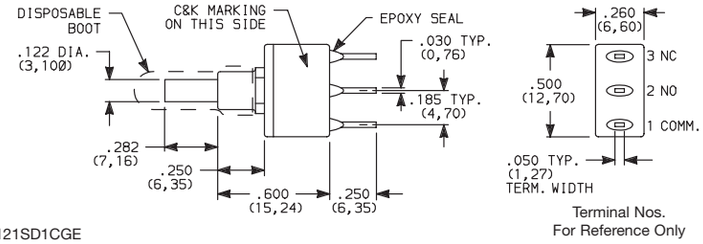


Part number shown: E121SD1CGE

**DPDT**

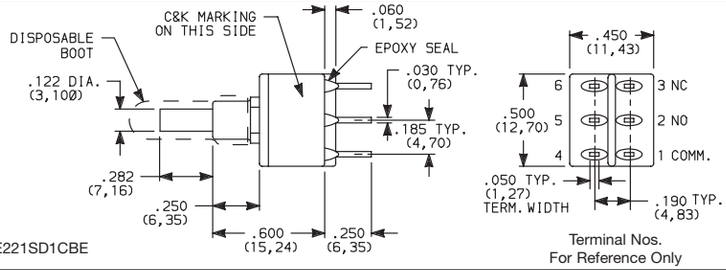


Part number shown: E221SD1CBE

MOM. = Momentary

E121, E221 models with all options when ordered with G or R contact material.

EX25 models must be ordered with B or P contact material.
EX21 models must be ordered with G or R contact material.

## PLUNGER

**S** .282" HIGH

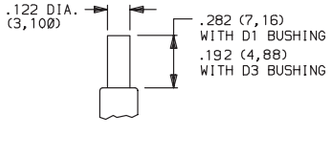


**S1** .332" HIGH

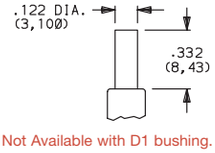


Not Available with D1 bushing.

**M** .332" HIGH SNAP-FITTING

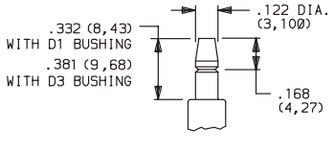


**NOTE:** Caps available for all plunger options, see page A-27.

## BUSHING

**D1** UNTHREADED

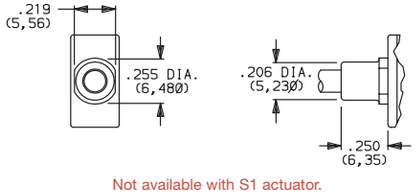


Not available with S1 actuator.

**D3** .180" HIGH UNTHREADED

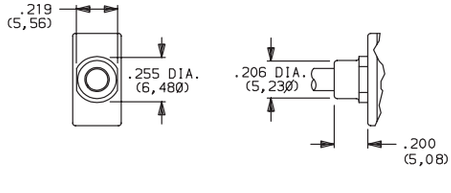


**NOTE:** Disposable splashproof vinyl over actuator and bushing supplied std., see page A-26.

Third Angle Projection

*Dimensions are shown: Inches (mm)*
*Specifications and dimensions subject to change*

## TERMINATIONS

**C** PC THRU-HOLE

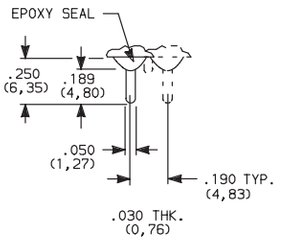


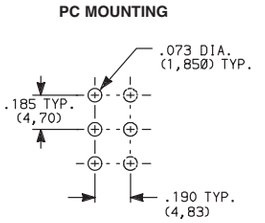


### SPDT and DPDT

**A** RIGHT ANGLE, PC THRU-HOLE

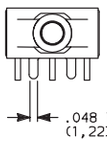


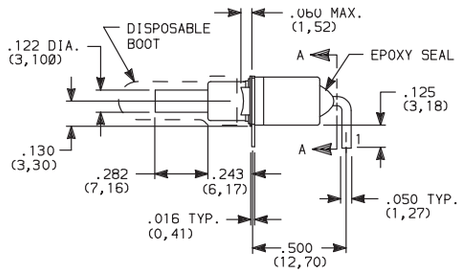


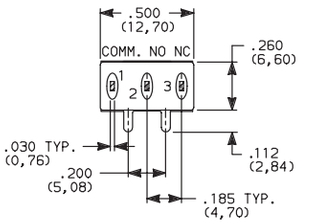


SECTION A-A

E121SD1AGE
**SPDT**

**A3** RIGHT ANGLE, SNAP-IN, PC THRU-HOLE

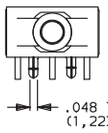


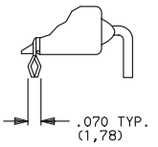


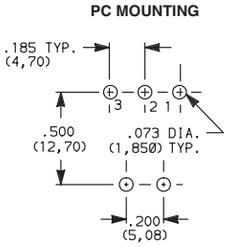


**NOTE:** Terminal bend radii and lead-in manufacturing option.

**A** RIGHT ANGLE, PC THRU-HOLE

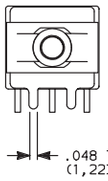


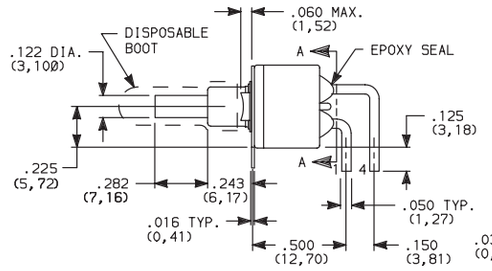


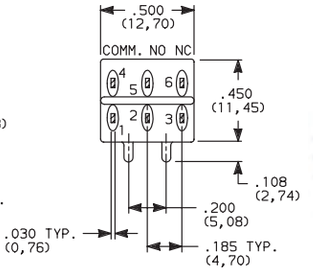


SECTION A-A

E221SD1AGE
**DPDT**

**A3** RIGHT ANGLE, SNAP-IN, PC THRU-HOLE

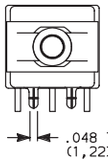


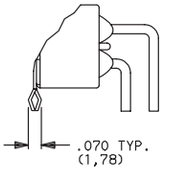


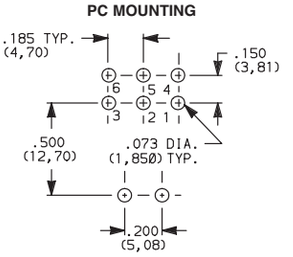


**NOTE:** Terminal bend radii and lead-in manufacturing option.

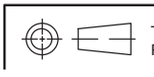

Third Angle Projection

*Dimensions are shown: Inches (mm)*
*Specifications and dimensions subject to change*

# E020 Series
# Sealed Snap-acting Momentary Pushbutton Switches

## TERMINATIONS

### AV2
VERTICAL RIGHT ANGLE, PC THRU-HOLE,
.150" PITCH

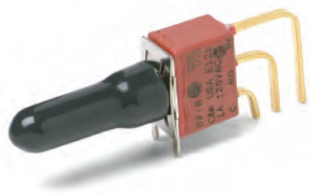

E121SD1AV2GE
**SPDT**

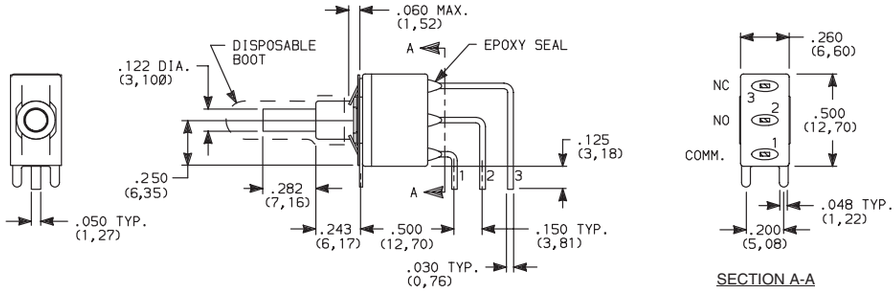


### AV3
VERTICAL RIGHT ANGLE, SNAP-IN, PC THRU-HOLE,
.150" PITCH

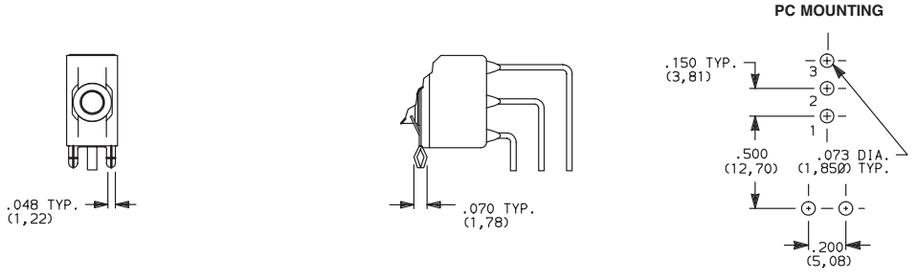


**NOTE:** Terminal bend radii and lead-in manufacturing option.

### AV2
VERTICAL RIGHT ANGLE, PC THRU-HOLE,
.150" PITCH

E221SD1AV2GE
**DPDT**

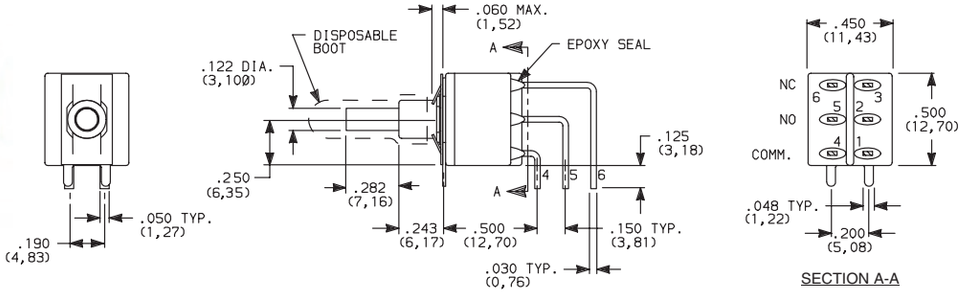


### AV3
VERTICAL RIGHT ANGLE, SNAP-IN, PC THRU-HOLE,
.150" PITCH

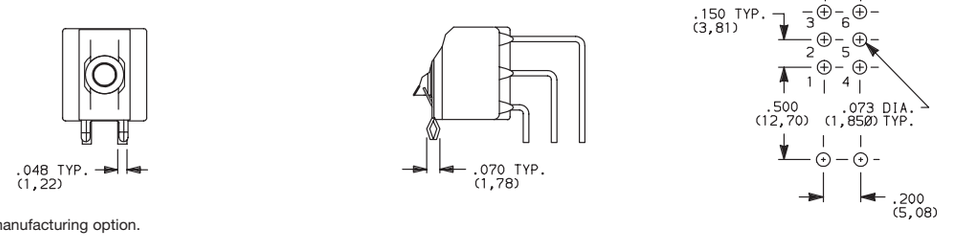


**NOTE:** Terminal bend radii and lead-in manufacturing option.

Third Angle Projection

*Dimensions are shown: Inches (mm)*
*Specifications and dimensions subject to change*

## TERMINATIONS

**V3, V4** VERTICAL MOUNT, V-BRACKET

**V31, V41** VERTICAL MOUNT, V-BRACKET, SNAP-IN

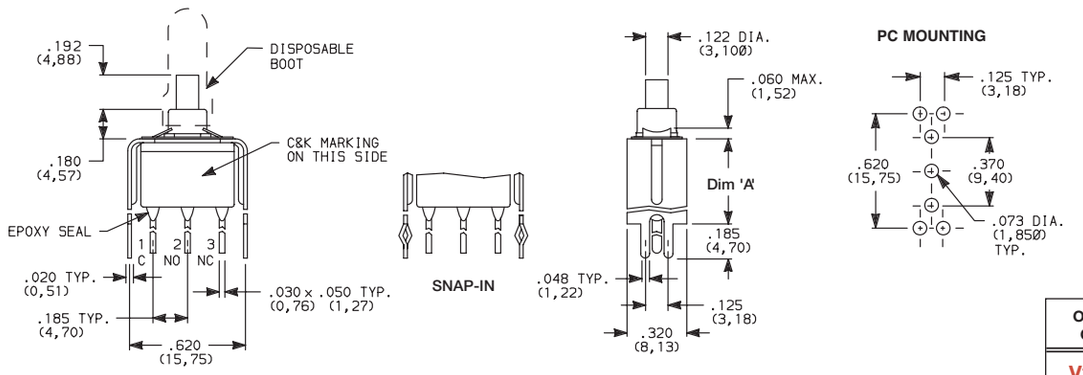

E121SD3__GE
**SPDT**

| OPTION CODE | DIM 'A' |
|---|---|
| V3, V31 | .460 (11,68) |
| V4, V41 | .630 (16,00) |

**V3, V4** VERTICAL MOUNT, V-BRACKET

**V31, V41** VERTICAL MOUNT, V-BRACKET, SNAP-IN

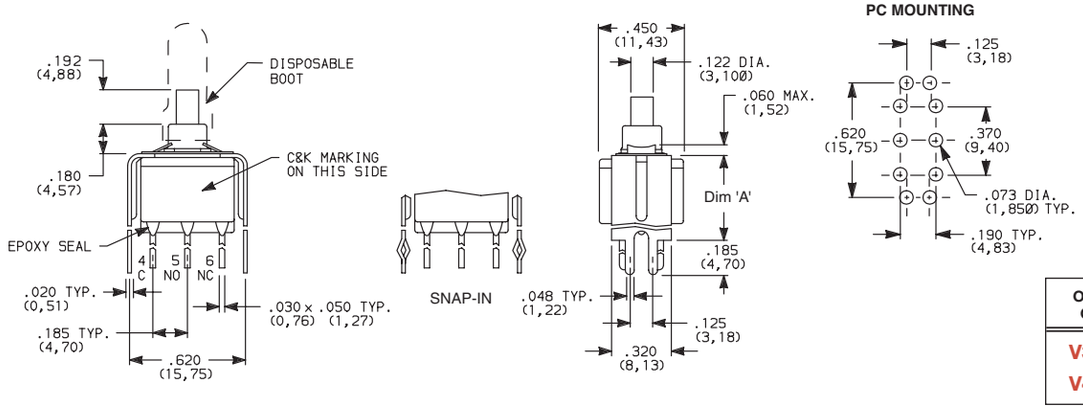

E221SD3__GE
**DPDT**

| OPTION CODE | DIM 'A' |
|---|---|
| V3, V31 | .460 (11,68) |
| V4, V41 | .630 (16,00) |

**V6, V8** VERTICAL MOUNT, V-BRACKET

**V61, V81** VERTICAL MOUNT, V-BRACKET, SNAP-IN

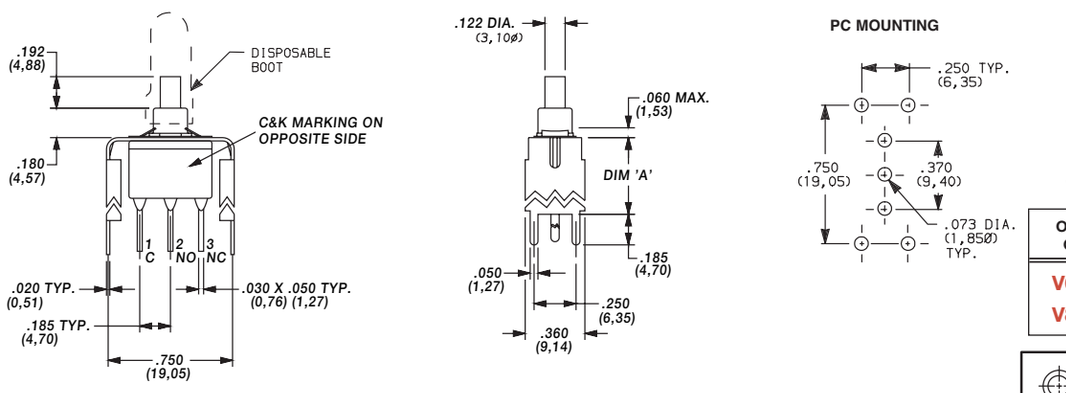

E121SD3__GE
**SPDT**

| OPTION CODE | DIM 'A' |
|---|---|
| V6, V61 | .460 (11,68) |
| V8, V81 | .953 (24,21) |

Third Angle Projection

*Dimensions are shown: Inches (mm)*
*Specifications and dimensions subject to change*

# E020 Series
# Sealed Snap-acting Momentary Pushbutton Switches

## TERMINATIONS

**V6, V8** VERTICAL MOUNT, V-BRACKET

**V61, V81** VERTICAL MOUNT, V-BRACKET, SNAP-IN

E221SD3V6GE
**DPDT**

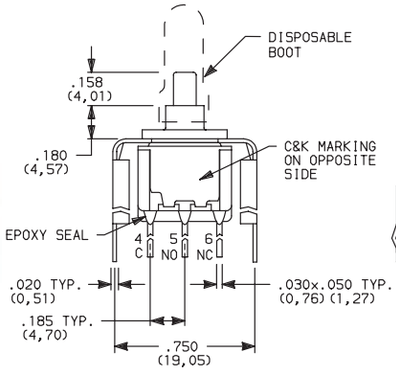


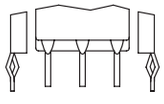


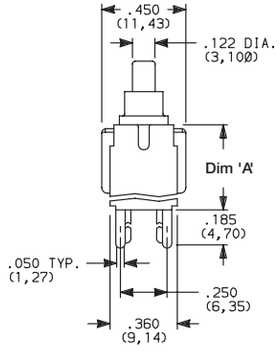


**PC MOUNTING**

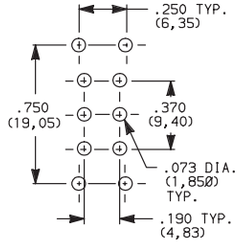


| OPTION CODE | DIM 'A' |
|---|---|
| V6, V61 | .460 (11,68) |
| V8, V81 | .953 (24,21) |

## CONTACT MATERIAL

| OPTION CODE | CONTACT MATERIAL | TERMINAL PLATING | RATINGS | |
|---|---|---|---|---|
| B | GOLD [1] | GOLD [1] | LOW LEVEL/DRY CIRCUIT | EX25 MODELS ONLY: 0.4 VA MAX. @ 20 V AC OR DC MAX. |
| P | | MATTE-TIN [4] | | |
| G | GOLD OVER SILVER [2,3] | GOLD [3] | LOW LEVEL/DRY CIRCUIT OR POWER | EX21 MODELS ONLY: 0.4 VA MAX @ 20 V AC OR DC MAX. OR 1 AMP @ 120 V AC OR 28 V DC. |
| R | | MATTE-TIN [4] | | |

* Note: See Technical Data section of this catalog for RoHS compliant and compatible definitions and specifications.

[1] CONTACTS & TERMINALS: Copper alloy, with gold plate over nickel plate.
[2] N.O. AND N.C. CONTACTS: Coin silver, with gold plate over nickel plate.
[3] COMMON CONTACTS & ALL TERMINALS: Copper alloy, with gold plate over nickel plate.
[4] TERMINALS: Copper alloy, with matte-tin alloy over nickel plate.

**NOTE:** Any models supplied with P, R, B or G contact material are RoHS compliant.

E121, E221 models c UL us with all options when ordered with mandatory G, or R contact material.

P or B contact material must be ordered with EX25 models.

R or G contact material must be ordered with EX21 models.

## SEAL

**E** EPOXY SEAL AND DISPOSABLE SPLASHPROOF BOOT

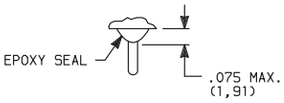


Disposable splashproof boot supplied standard. Remove and discard boot *only after* soldering and cleaning processes are complete.

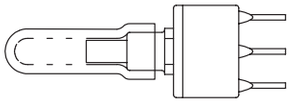

Third Angle Projection

*Dimensions are shown: Inches (mm)*
*Specifications and dimensions subject to change*

## AVAILABLE HARDWARE

**Cap**

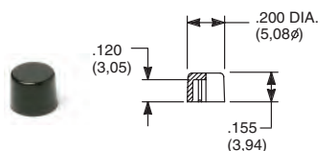


**PART NO.**

| | |
|---|---|
| 708901000 | WHITE |
| 708902000 | BLACK |
| 708903000 | RED |

Material: Nylon
Finish: Gloss

**Cap**

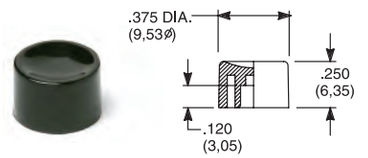


**PART NO.**

| | |
|---|---|
| 752701000 | WHITE |
| 752702000 | BLACK |
| 752703000 | RED |

Material: Nylon
Finish: Gloss

**Cap**

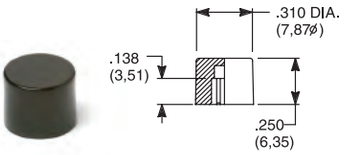


**PART NO.**

| | |
|---|---|
| 801801000 | WHITE |
| 801802000 | BLACK |
| 801803000 | RED |

Material: Nylon
Finish: Gloss

**Cap, Snap-fitting plunger**

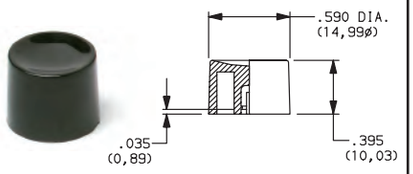


**PART NO.**

| | |
|---|---|
| 452D01000 | WHITE |
| 452D02000 | BLACK |
| 452D03000 | RED |

Material: Nylon
Finish: Gloss

**Cap, Snap-fitting plunger**

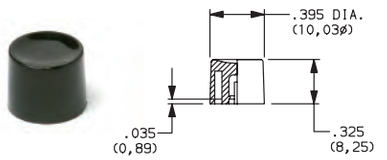


**PART NO.**

| | |
|---|---|
| 894101000 | WHITE |
| 894102000 | BLACK |
| 894103000 | RED |

Material: Nylon
Finish: Gloss

**Cap**

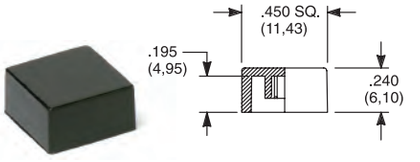


**PART NO.**

| | |
|---|---|
| 484601000 | WHITE |
| 484602000 | BLACK |
| 484603000 | RED |

Material: Nylon
Finish: Gloss

**PART NO.**

| | |
|---|---|
| 798201000 | WHITE |
| 798202263 | BLACK |
| 798203000 | RED |

Material: Nylon
Finish: Matte

**NOTE:** Other cap colors available, consult Customer Service Center.

Frames snap into panel opening and are independent from switch mounting. Accurate positioning of the PC mounted switch relative to the panel opening is necessary to provide proper clearance between actuator and frame. Available in two basic styles and four panel thicknesses .047-.125 in. Material: Nylon. Finish: Matte.

**TYPICAL APPLICATION**

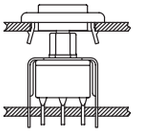

| .047" (1,19) PANEL THK. | .062" (1,57) PANEL THK. | .090" (2,29) PANEL THK. | .125" (3,18) PANEL THK. |
|---|---|---|---|
| **PART NO.** | **PART NO.** | **PART NO.** | **PART NO.** |
| 432502263 | 432602263 | 432702263 | 432802263 BLACK |

**PANEL MOUNTING**

For part numbers
4325xxxxx, 4326xxxxx

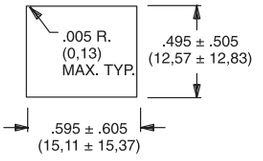


For part numbers
4327xxxxx, 4328xxxxx

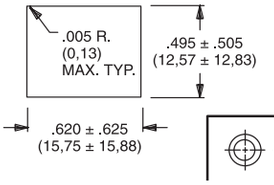


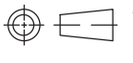

Third Angle Projection

*Dimensions are shown: Inches (mm)*
*Specifications and dimensions subject to change*

# E020 Series
# Sealed Snap-acting Momentary Pushbutton Switches

## AVAILABLE HARDWARE

PANEL INSERTS

Above frames (part nos. 432XXXXXX) are also available with insert which accepts LED for indicator light assembly. Order insert separately from frame. Blank insert panel (without hole for LED) also available. **LED not included.**

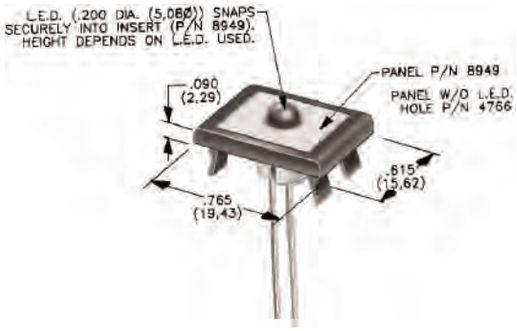


| PANEL INSERT WITH HOLE FOR LED | BLANK PANEL INSERT WITHOUT HOLE FOR LED | |
|---|---|---|
| **PART NO.** | **PART NO.** | |
| 894902000 | 476602000 | BLACK |

Special colors, custom markings available, consult Customer Service Center.

Third Angle Projection

*Dimensions are shown: Inches (mm)*
*Specifications and dimensions subject to change*

# 8020 Series
# Snap-acting Momentary Pushbutton Switches

## *Features/Benefits*

- ***Positive tactile feel***
- ***Multi-positions available***
- ***Wide variety of termination options***
- ***Epoxy terminal seal compatible with bottom wash cleaning***
- ***RoHS compliant models available***

Models Available

## *Typical Applications*

- ***Instrumentation***
- ***Computer peripherals***
- ***Telecommunications equipment***

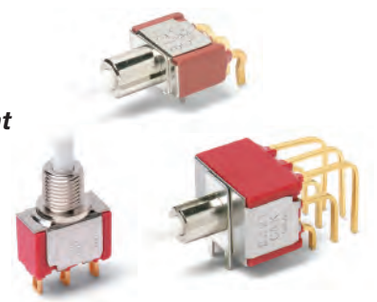

## Specifications

CONTACT RATING: B contact material (8X25 Models): 0.4 VA max. @ 20 V AC or DC maximum. G contact material (8X21, U8X1 Models): 1 AMP @ 120 V AC or 28 V DC or 0.4 VA max. @ 20 V AC or DC max. Note: Break-before-makecontacts. Multi-pole contacts do not make and break simultaneously. See page A-43 for additional ratings.

ELECTRICAL LIFE: 60,000 make-and-break cycles at full load.

CONTACT RESISTANCE: Below 50 mΩ typ. initial @ 2-4 V DC, 100 mA, for both silver and gold plated contacts.

INSULATION RESISTANCE: $10^9$Ω min.

DIELECTRIC STRENGTH: 1,000 Vrms min. @ sea level.

OPERATING TEMPERATURE: 8X2X MODELS: –30°C to 75°C. U8X1 MODELS: –30°C to 65°C.

CAP INSTALLATION FORCE: 10 lbs. max. permissible.

SOLDERABILITY: Per MIL-STD-202F method 208D, or EIA RS-186E method 9 (1 hour steam aging).

**NOTE:** Any models supplied with B, P, R, or G contact material are RoHS compliant.

**NOTE:** Specifications and materials listed above are for switches with standard options. For information on specific and custom switches, consult Customer Service Center.

## Materials

CASE: Glass filled nylon 6/6 or diallyl phthalate (DAP), flame retardant (UL 94V-0).

PLUNGER: Glass filled nylon or glass filled polyester (PBT) (UL 94V-0).

CAP & FRAME: Nylon, black, standard.

BUSHING: Brass or zinc, nickel plated.

HOUSING: Stainless steel.

SWITCH SUPPORT: Brass or steel, matte-tin plated.

N.O. & N.C. CONTACTS: 8X21, U8X1 MODELS: G contact material: Coin silver, with gold plate over nickel plate. See page A-43 for additional contact materials.
8X25 MODELS: B contact material: Copper alloy, with gold plate over nickel plate. See page A-43 for additional contact materials.

COMMON CONTACT & ALL TERMINALS: Copper alloy, with gold plate over nickel plate.

TERMINAL SEAL: Epoxy. Refer to soldering and cleaning Technical Data Chapter.

HARDWARE: Nut & Locking Ring: Brass, nickel plated; Lockwasher: Steel, nickel plated.

## Build-A-Switch

To order, simply select desired option from each category and place in the appropriate box. Available options are shown and described on pages A-30 thru A-45. For additional options not shown in catalog, consult Customer Service Center. All models have epoxy terminal seal and are compatible with all "bottom-wash" PCB cleaning methods.

**Switch Function**
- **8121** SPDT On-Mom. 1 Amp
- **8125** SPDT On-Mom. 0.4VA
- **8221** DPDT On-Mom. 1 Amp
- **8225** DPDT On-Mom. 0.4VA
- **8321** 3PDT On-Mom. 1 Amp
- **8325** 3PDT On-Mom. 0.4VA
- **8421** 4PDT On-Mom. 1 Amp
- **8425** 4PDT On-Mom. 0.4VA

**Note:** UL models available, see page A-30 and A-31.

**Actuator or Plunger**
- **S** Plunger
- **NONE** Snap-in
- **J80** Snap-in
- **J81** Snap-in w/frame
- **J82** Snap-in w/frame for LED
- **J83** Snap-in w/frame & flush cap
- **J84** Snap-in w/frame for LED, flush cap
- **J85** Snap-in w/frame & LED
- **J95** PC w/V-bracket & LED
- **L** Plunger
- **M** Snap-fitting plunger

**Bushing**
- **D9** .280" high, keyway
- **H** .250" high, flat
- **NONE** No bushing choice required
- **D** .280" high, keyway
- **D2** .288" high, flat
- **D3** .180" high
- **D8** .288" high, flat
- **H9** .250" high, flat, hi torque
- **Y** .350" high, keyway
- **Y3** 6.35mm high, keyway, hi torque
- **Y4** .378" high, flat, hi torque
- **Y9** .350" high, keyway

**Contact Material**
- **B** Gold
- **P** Gold, matte-tin
- **G** Gold over silver
- **R** Gold over silver, matte-tin

**Seal**
- **E** Epoxy
- **I** Epoxy potted base

**Cap Color**
- **2** Black
- **NONE** Models without caps
- **1** White
- **3** Red
- **4** Orange
- **5** Yellow
- **6** Green
- **7** Blue
- **9** Gray

**Frame Color**
- **2** Black
- **NONE** Models without frame
- **1** White
- **3** Red
- **5** Yellow
- **6** Green
- **9** Gray

**LED Color**
- **3** Red
- **NONE** Models without LED
- **5** Yellow
- **6** Green

**Terminations**
- **A** Right angle, PC thru-hole
- **AV2** Vertical right angle, PC thru-hole
- **C** PC Thru-hole
- **Z** Solder lug
- **A2** Right angle, PC thru-hole
- **A3** Right angle, snap-in, PC thru-hole
- **A4** Right angle, PC thru-hole, reversed terminals
- **A6** Right angle, PC thru-hole
- **AV1** Vertical right angle, PC thru-hole
- **AV3** Vertical right angle, snap-in, PC thru-hole
- **R** Right angle with PCB
- **R2** Right angle with PCB, reversed terminals
- **V2** .555" high, V-bracket
- **V3** .460" high, V-bracket
- **V4** .630" high, V-bracket
- **V6** .460" high, V-bracket
- **V7** .630" high, V-bracket
- **V8** .953" high, V-bracket
- **V9** 1.150" high, V-bracket
- **V31** .460" high, snap-in V-bracket
- **V61** .460" high, snap-in V-bracket
- **W** .750" long, wire wrap
- **W1** .964" long, wire wrap
- **W3** .425" long, wire wrap
- **W4** 1.062" long, wire wrap
- **Z3** Quick connect

*Dimensions are shown: Inches (mm)*
*Specifications and dimensions subject to change*

# 8020 Series
# Snap-acting Momentary Pushbutton Switches

## SWITCH FUNCTION

| NO. POLES | MODEL NO. | UL/CSA* MODEL NO. | SWITCH FUNCTION POS. 1 (C&K marking on opposite side) | SWITCH FUNCTION POS. 2 | CONNECTED TERMINALS POS. 1 (C&K marking on opposite side) | CONNECTED TERMINALS POS. 2 | SCHEMATIC |
|---|---|---|---|---|---|---|---|
| SP | 8121 | U811 | ON | MOM. | 1-3 | 1-2 | SPDT |
| | 8125 | | ON | MOM. | | | |

### SPDT

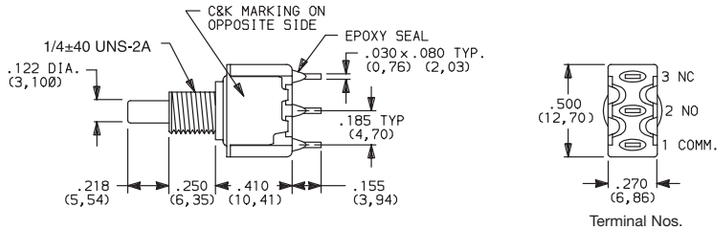


Part number shown: 8121SHZGE

Terminal Nos. For Reference Only

| | | | | | | | |
|---|---|---|---|---|---|---|---|
| DP | 8221 | U821 | ON | MOM. | 1-3,4-6 | 1-2,4-5 | DPDT |
| | 8225 | | ON | MOM. | | | |

### DPDT

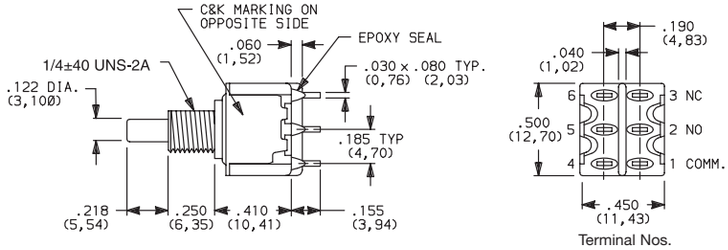


Part number shown: 8221SHZGE

Terminal Nos. For Reference Only

| | | | | | | | |
|---|---|---|---|---|---|---|---|
| 3P | 8321 | U831 | ON | MOM. | 1-3,4-6,7-9 | 1-2,4-5,7-8 | 3PDT |
| | 8325 | | ON | MOM. | | | |

### 3PDT

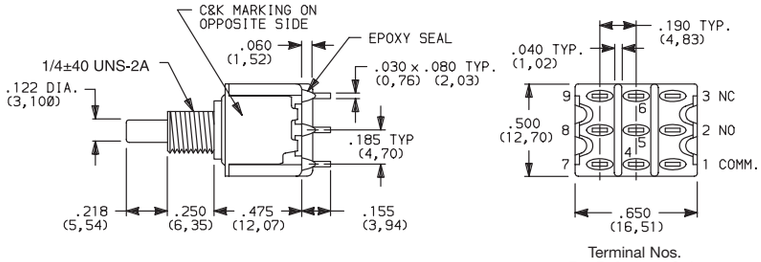


Part number shown: 8321SHZGE

Terminal Nos. For Reference Only

MOM. = Momentary

*U811 thru U841 model numbers c UL us with all options (except R, R2 terminations) when ordered with G or R contact material.

8X25 models must be ordered with B or P contact material.

8X21 and U8X1 models must be ordered with G or R contact material.

Third Angle Projection

*Dimensions are shown: Inches (mm)*
*Specifications and dimensions subject to change*

# 8020 Series
# Snap-acting Momentary Pushbutton Switches

## SWITCH FUNCTION

| NO. POLES | MODEL NO. | UL/CSA* MODEL NO. | SWITCH FUNCTION POS. 1 | SWITCH FUNCTION POS. 2 | CONNECTED TERMINALS POS. 1 | CONNECTED TERMINALS POS. 2 | SCHEMATIC |
|---|---|---|---|---|---|---|---|
| | | | C&K marking on opposite side | | C&K marking on opposite side | | |
| 4P | 8421 | U841 | ON | MOM. | 1-3,4-6,7-9,10-12 | 1-2,4-5,7-8,10-11 | 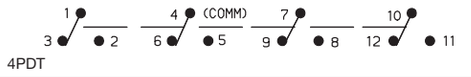 |
| | 8425 | | ON | MOM. | | | |



### 4PDT

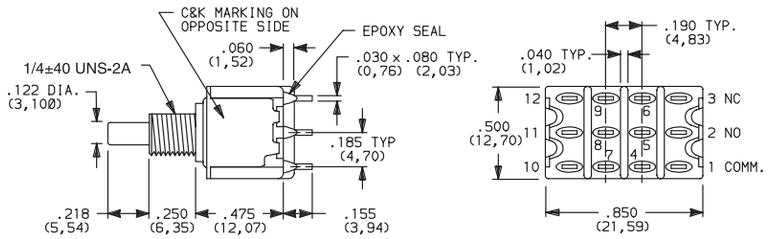


Part number shown: 8421SHZGE

Terminal Nos.
For Reference Only

MOM. = Momentary

* U811 thru U841 model numbers c UL us with all options (except R, R2 terminations) when ordered with G or R contact material.

8X25 models must be ordered with B or P contact material.

8X21 and U8X1 models must be ordered with G or R contact material.

## ACTUATOR—SNAP-IN FRONT MOUNT

CAP COLOR
ACTUATOR OR PLUNGER
FRAME COLOR

| OPTION CODE | CAP AND FRAME COLOR |
|---|---|
| 2 | BLACK |
| NONE | No Frame Color (J80 option) |
| 1 | WHITE |
| 3 | RED |
| 4 | ORANGE |
| 5 | YELLOW |
| 6 | GREEN |
| 7 | BLUE |
| 9 | GRAY |

Other colors available, consult Customer Service Center. Cap and Frame Finish: matte.

**NOTE:** Caps and frames available separately, see pages A-44 and A-45.

### J80 SNAP-IN

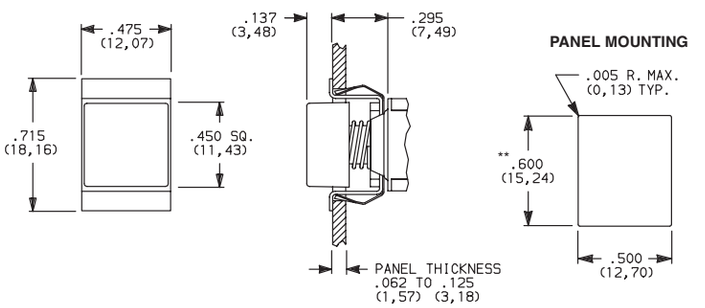

**NOTE:** No frame color choice required.

** Increase this dim. to .620/.625 (15,75/15,88) for .091/.125 (2,31/3,18) thk. panels.

### J81 SNAP-IN WITH FRAME

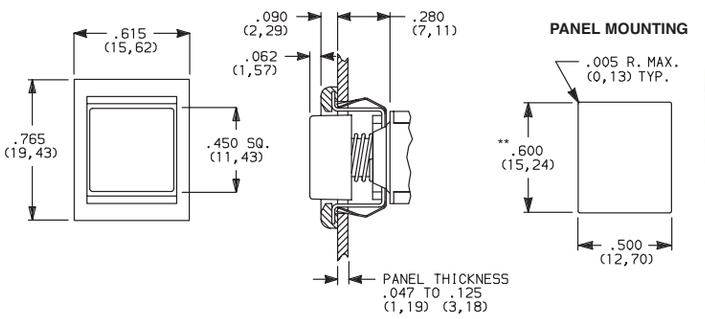

**NOTE:** Available with C, W-W4, Z or Z3 terminations and SPDT and DPDT models only.

** Increase this dim. to .620/.625 (15,75/15,88) for .091/.125 (2,31/3,18) thk. panels.

Third Angle Projection

*Dimensions are shown: Inches (mm)*
*Specifications and dimensions subject to change*

# 8020 Series
# Snap-acting Momentary Pushbutton Switches

## ACTUATOR—SNAP-IN FRONT MOUNT

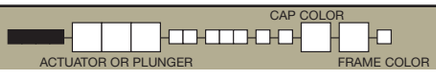


### J83 SNAP-IN WITH FRAME AND FLUSH CAP

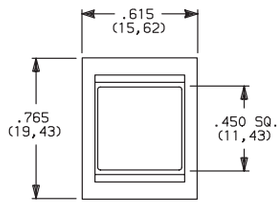


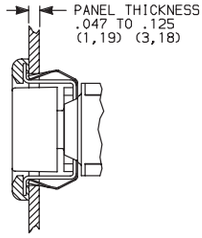


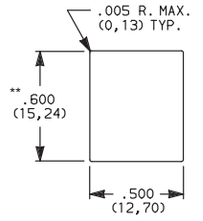


### J82 SNAP-IN WITH FRAME FOR LED

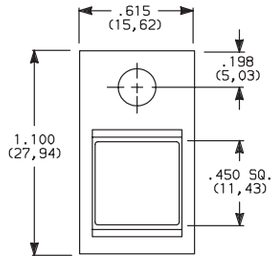


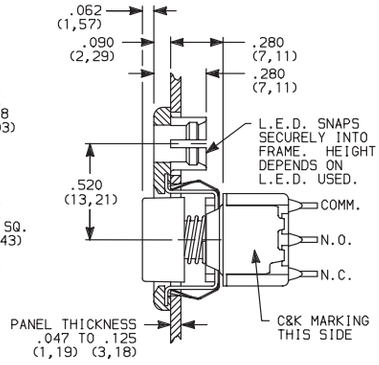


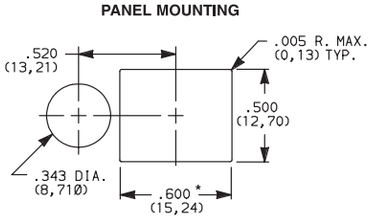


* Increase this dim. to .620/.625 (15,75/15,88) for .091/.125 (2,31/3,18) thk. panels.

**LED not included.**
For LED information, see page A-45.

### J84 SNAP-IN WITH FRAME FOR LED, FLUSH CAP

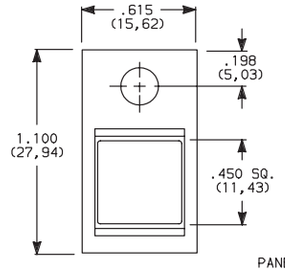


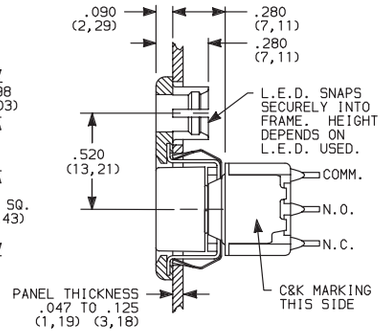


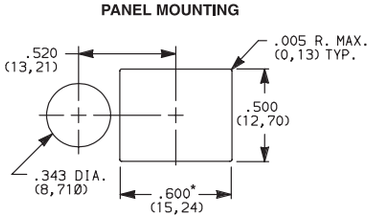


* Increase this dim. to .620/.625 (15,75/15,88) for .091/.125 (2,31/3,18) thk. panels.

**LED not included.**
For LED information, see page A-45.

| OPTION CODE | CAP AND FRAME COLOR |
|---|---|
| 2 | BLACK |
| 1 | WHITE |
| 3 | RED |
| 4 | ORANGE |
| 5 | YELLOW |
| 6 | GREEN |
| 7 | BLUE |
| 9 | GRAY |

Other colors available, consult Customer Service Center.
Cap and Frame Finish: matte.

Available with C, W-W4, Z or Z3 terminations and SPDT and DPDT models only.

**NOTE:** Caps and frames available separately, see pages A-44 and A-45.

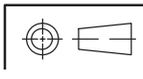
Third Angle Projection

*Dimensions are shown: Inches (mm)*
*Specifications and dimensions subject to change*

## ACTUATOR—SNAP-IN FRONT MOUNT

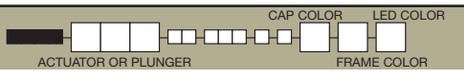


### J85 SNAP-IN WITH FRAME AND LED

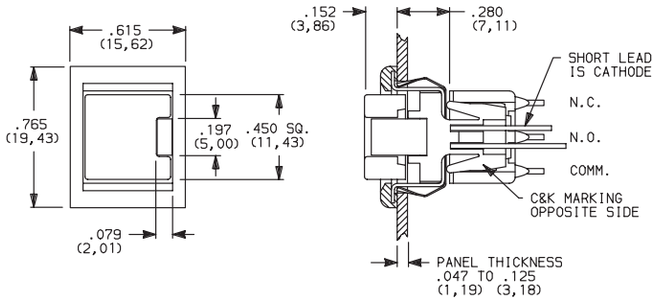


**PANEL MOUNTING**

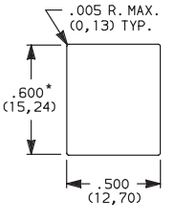


* Increase this dim. to .620/.625 (15,75/15,88) for .091/.125 (2,31/3,18) thk. panels.

8121J85ZGE223
**SPST**

Available with C, W-W4, Z or Z3 terminations and SPDT models only. For LED information see page A-45.

**NOTE:** Caps & frames available separately, see pages A-44 and A-45.

| OPTION CODE | CAP AND FRAME COLOR |
|---|---|
| 2 | BLACK |
| 1 | WHITE |
| 3 | RED |
| 4 | ORANGE |
| 5 | YELLOW |
| 6 | GREEN |
| 7 | BLUE |
| 9 | GRAY |

| OPTION CODE | LED COLOR |
|---|---|
| 3 | RED |
| 5 | YELLOW |
| 6 | GREEN |

For LED information see page A-45.

## ACTUATOR—PC MOUNT

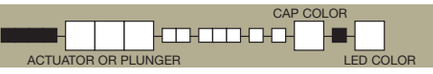


### J95 PC WITH V-BRACKET AND LED

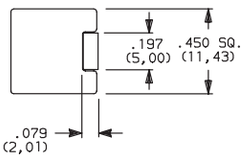


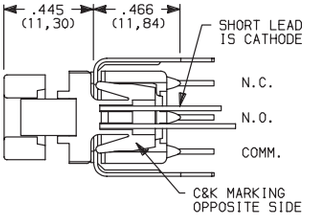


**PC MOUNTING**

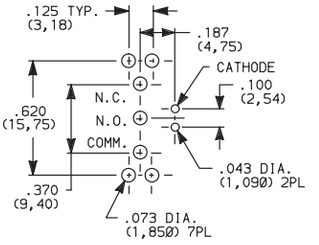

8121J95V3GE23
**SPST**

| OPTION CODE | CAP AND FRAME COLOR |
|---|---|
| 2 | BLACK |
| 1 | WHITE |
| 3 | RED |
| 4 | ORANGE |
| 5 | YELLOW |
| 6 | GREEN |
| 7 | BLUE |
| 9 | GRAY |

| OPTION CODE | LED COLOR |
|---|---|
| 3 | RED |
| 5 | YELLOW |
| 6 | GREEN |

For LED information see page A-45.

**NOTE:** Caps available separately, see page A-44.
Available with V3 terminations and SPDT models only.

Third Angle Projection

*Dimensions are shown: Inches (mm)*
*Specifications and dimensions subject to change*

# 8020 Series
# Snap-acting Momentary Pushbutton Switches

## PLUNGER

ACTUATOR OR PLUNGER

**S** PLUNGER

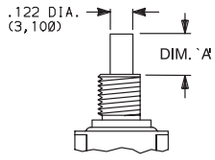


| AVAILABLE BUSHINGS | DIM. 'A' FOR C, W-W4, Z & Z3 TERMINATIONS | DIM. 'A' FOR A, A2, A3, A4, A6, AV-A3, R & R2 TERMINATIONS | DIM. 'A' FOR V3-V61 TERMINATIONS |
|---|---|---|---|
| D, D9 | .244 (6,20) | .228 (5,79) | .224 (5,69) |
| H, H9 | .218 (5,54) | .202 (5,13) | .198 (5,03) |
| Y, Y9 | .203 (5,16) | .187 (4,75) | .183 (4,65) |
| Y3 | (5,54) | (5,13) | (5,03) |
| Y4 | .185 (4,70) | .169 (4,29) | .165 (4,19) |
| D2, D8 | N/A | .232 (5,89) | .228 (5,79) |
| D3 | N/A | .162 (4,11) | .158 (4,01) |

**NONE** NO PLUNGER CHOICE REQUIRED (JXX ACTUATORS)

**L** PLUNGER

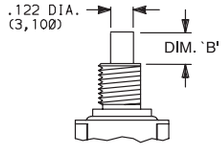


| AVAILABLE BUSHINGS | DIM. 'B' FOR C, W-W4, Z & Z3 TERMINATIONS | DIM. 'B' FOR A, A2, A3, A4, A6, AV-A3, R & R2 TERMINATIONS | DIM. 'B' FOR V3-V61 TERMINATIONS |
|---|---|---|---|
| Y, Y9 | .178 (4,52) | .162 (4,11) | .158 (4,01) |
| Y4 | .090 (2,29) | .074 (1,88) | .070 (1,78) |

**M** SNAP-FITTING PLUNGER

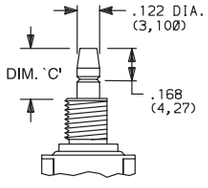


| AVAILABLE BUSHINGS | DIM. 'C' FOR C, W-W4, Z & Z3 TERMINATIONS | DIM. 'C' FOR A, A2, A3, A4, A6, AV-A3, R & R2 TERMINATIONS | DIM. 'C' FOR V3-V61 TERMINATIONS |
|---|---|---|---|
| D, D9 | .297 (7,54) | .281 (7,14) | .277 (7,04) |
| H, H9 | .267 (6,78) | .251 (6,38) | .247 (6,27) |
| Y, Y9 | .259 (6,58) | .243 (6,17) | .239 (6,07) |
| Y3 | (6,78) | (6,37) | (6,27) |
| Y4 | .259 (6,58) | .243 (6,17) | .239 (6,07) |
| D2, D8 | N/A | .273 (6,93) | .269 (6,83) |
| D3 | N/A | .361 (9,17) | .357 (9,07) |

N/A = NOT AVAILABLE

**NOTE:** When selecting plunger option, bushing selection must also be made, see next page. No plunger option is required when any JXX actuator option is selected. Additional plunger lengths are available on SPDT and DPDT models, consult Customer Service Center. Not all plunger lengths sufficient for use with caps, see page A-44.

## BUSHING

**NONE** NO BUSHING CHOICE REQUIRED (JXX ACTUATORS)

**D** .280" HIGH THREADED, KEYWAY

**D9** .280" HIGH UNTHREADED, KEYWAY

**H** .250" HIGH THREADED, FLAT

**H9** .250" HIGH UNTHREADED, FLAT

**Y** .350" HIGH THREADED, KEYWAY

**Y9** .350" HIGH UNTHREADED, KEYWAY

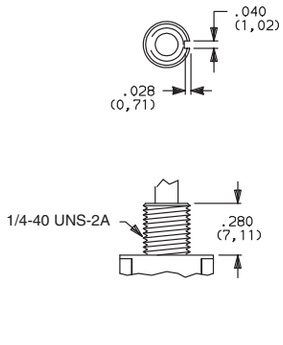


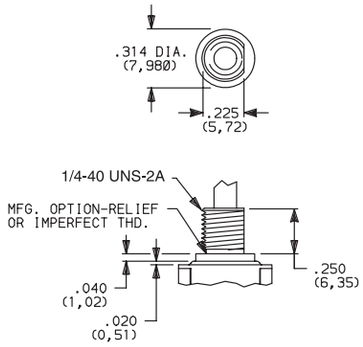


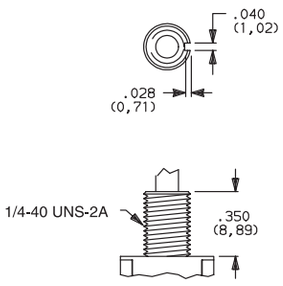


D9 bushing standard with A-A6, R, R2 AV-AV3 terminations.

H bushing standard with C, W-W4, Z or Z3 terminations. H, H9 bushings not available on single pole models with A3-A6, R, R2 terminations.

**Will withstand 12 in./lbs. of torque with no distortion.**

Third Angle Projection

*Dimensions are shown: Inches (mm)*
*Specifications and dimensions subject to change*

## BUSHING

**Y3** 6.35mm THREADED, KEYWAY

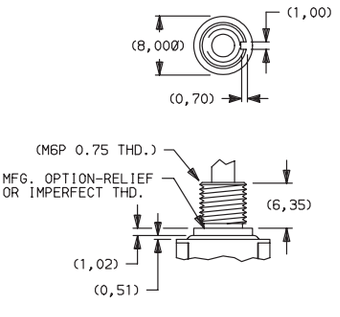


**Y4** .378" HIGH THREADED, FLAT

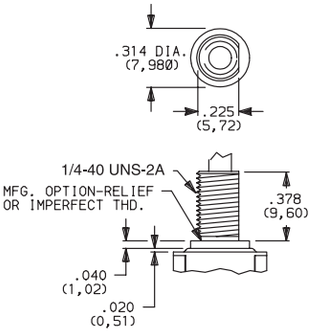


Y3 & Y4 bushings not available on single pole models with A3-A6, R, R2 terminations. Will withstand 12 in./lbs. of torque with no distortion.

**D2** .288" HIGH THREADED, FLAT
**D8** .288" HIGH UNTHREADED, FLAT

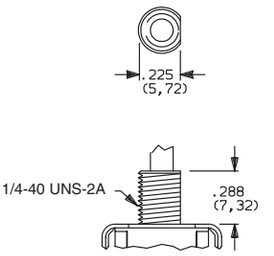


D2, D8 bushings not available with C, W-W4, Z, Z3 terminations.

**D3** .180" HIGH UNTHREADED

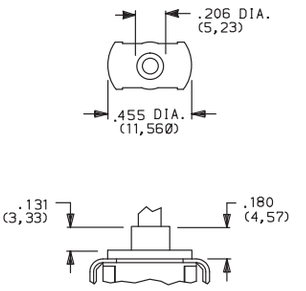


D3 bushing available with A, A2, A3, AV, AV2, AV3 and V2-V61 terminations only.

**NOTE:** No bushing option choice required when JXX actuator option is selected. When selecting bushing option, plunger selection must also be made, see previous page. Plunger lengths vary with bushing and termination options selected.

**PANEL MOUNTING**

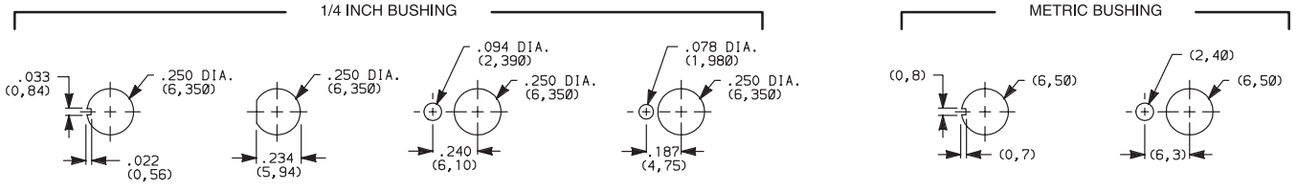


Without locking ring | With standard locking ring | With small locking ring | Without locking ring | With locking ring

**NOTE:** Two mounting nuts, locking ring and lockwasher supplied standard with threaded bushings.
Optional mounting nut and locking ring styles available, see section "Technical Data and Additional Hardware".

## TERMINATIONS

**Z** SOLDER LUG

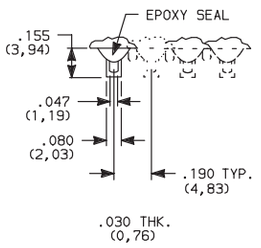


**SPDT thru 4PDT**

Not available with J95 actuator, P or R contact material.

**C** PC THRU-HOLE

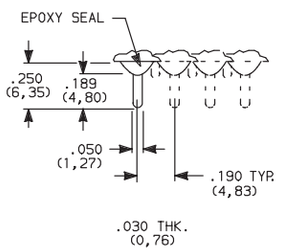


**PC MOUNTING**

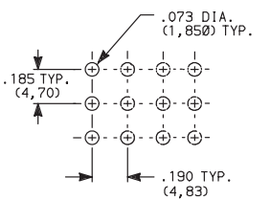


**SPDT thru 4PDT**

Not available with J95 actuator option.

**Z3** QUICK CONNECT

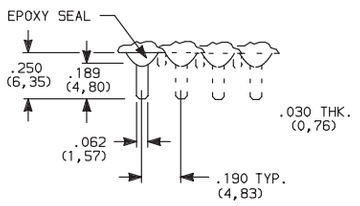


**SPDT thru 4PDT**

Not available with J95 actuator, P or R contact material. Mating quick connector available, order part number 530100000, page A-44.

**W W1, W3, W4** WIRE WRAP

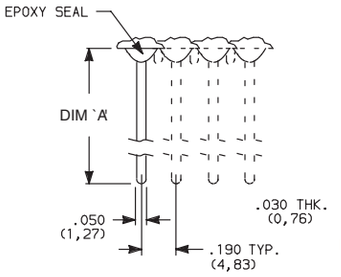


| OPTION CODE | DIM 'A' |
|---|---|
| W | .750 (19,05) |
| W1 | .964 (24,49) |
| W3 | .425 (10,80) |
| W4 | 1.062 (26,97) |

Not available with J95 actuator option.

**SPDT thru 4PDT**

Third Angle Projection

*Dimensions are shown: Inches (mm)*
*Specifications and dimensions subject to change*

# 8020 Series
# Snap-acting Momentary Pushbutton Switches

## TERMINATIONS

### A RIGHT ANGLE, PC THRU-HOLE

8121SD9AGE
**SPDT**

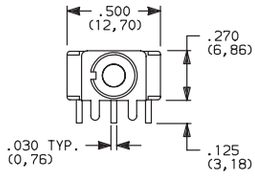


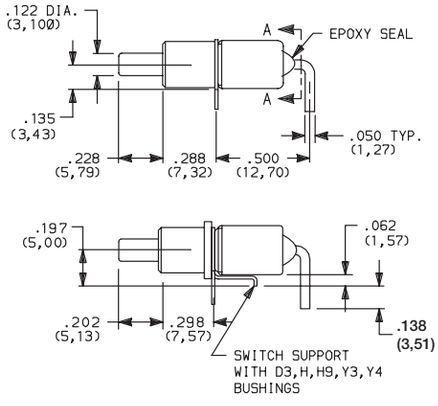


Part Number 8121SH9AGE

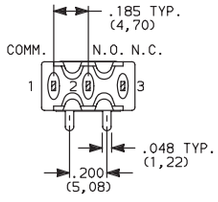


SECTION A-A

Terminal Nos.
For Reference Only.

### A3 RIGHT ANGLE, SNAP-IN, PC THRU-HOLE

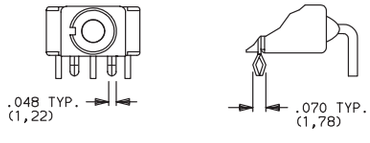


**PC MOUNTING**

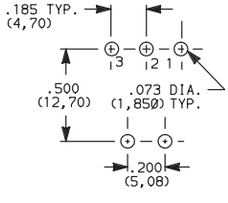


Not available with JXX actuators and I seal.
Terminal bend radii and lead-in manufacturing option.

### A RIGHT ANGLE, PC THRU-HOLE

8221SD9AGE
**DPDT**

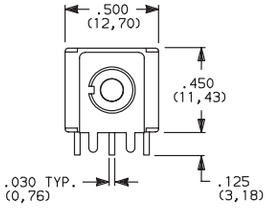


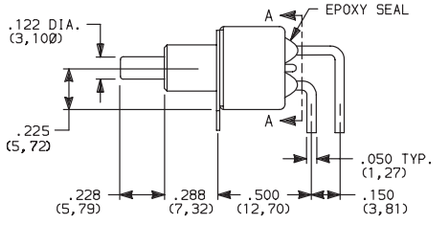


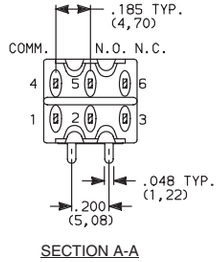


SECTION A-A

### A3 RIGHT ANGLE, SNAP-IN, PC THRU-HOLE

**PC MOUNTING**

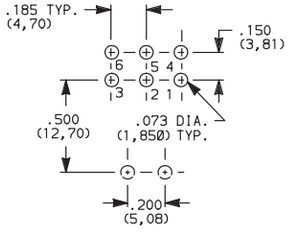


Not available with JXX actuators and I seal option.
Terminal bend radii and lead-in manufacturing option.

Third Angle Projection

*Dimensions are shown: Inches (mm)*
*Specifications and dimensions subject to change*

## TERMINATIONS

### A RIGHT ANGLE, PC THRU-HOLE

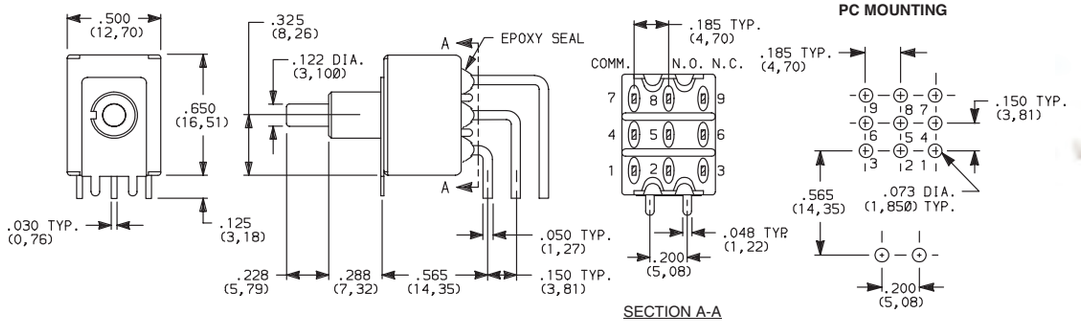

8321SD9AGE
**3PDT**

Not available with JXX actuators and I seal option.
Terminal bend radii and lead-in manufacturing option.

### A2 RIGHT ANGLE, PC THRU-HOLE

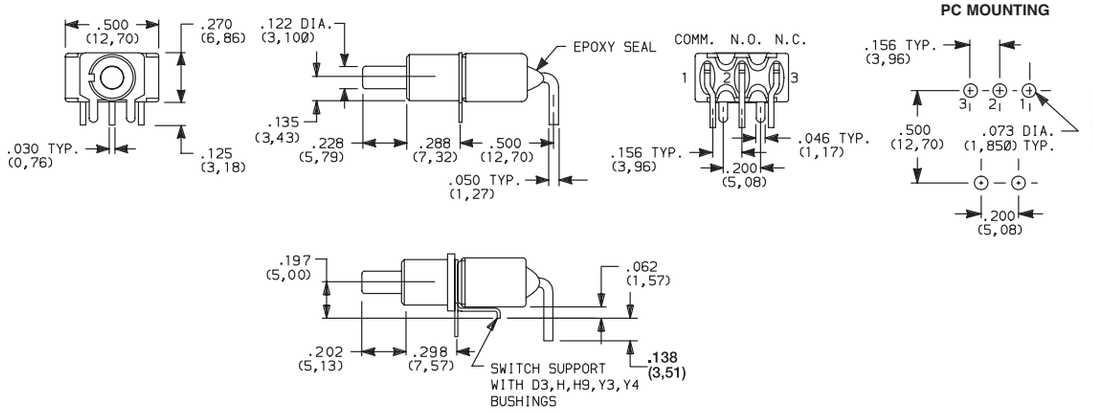


Part Number 8121SH9A2GE

8121SD9A2GE
**SPDT**

Not available with JXX actuators, I seal option.
Terminal bend radii and lead-in manufacturing option.

### A4 RIGHT ANGLE, PC THRU-HOLE, REVERSED TERMINALS

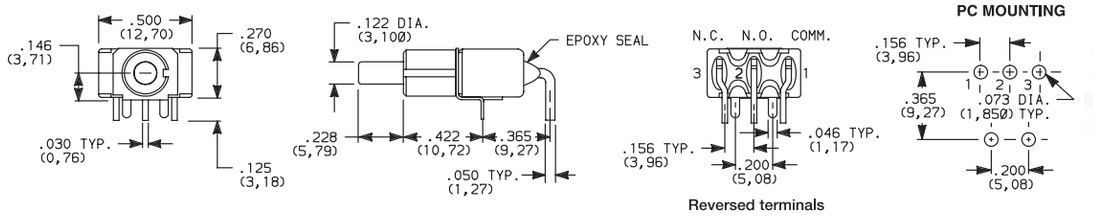

8121SD9A4GE
**SPDT**

Not available with JXX actuators, D3, H, H9, Y3, Y4 bushings and I seal.
Terminal bend radii and lead-in manufacturing option.

The A4 and R2 termination options are functionally identical and fit the same PC mounting pattern. The switches, however, are shifted relative to the mounting holes. The PC pattern must clear the switch support legs. Unlike the R2, the A4 option is available with UL/CSA.

Third Angle Projection

*Dimensions are shown: Inches (mm)*
*Specifications and dimensions subject to change*

# 8020 Series
# Snap-acting Momentary Pushbutton Switches

## TERMINATIONS

### A6 RIGHT ANGLE, PC THRU-HOLE

8121SD9A6GE
**SPDT**

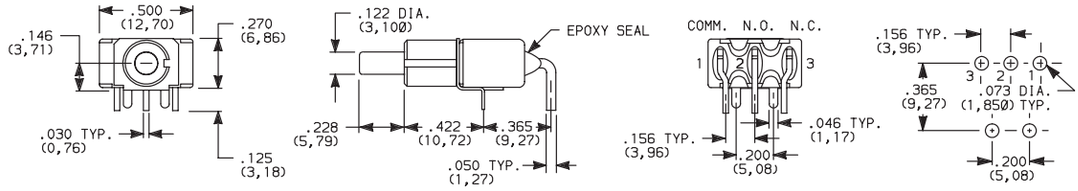


The A6 and R termination options are functionally identical and fit the same PC mounting pattern, The switches, however, are shifted relative to the mounting holes. The PC pattern must clear the switch support legs. Unlike the R, the A6 option is available with UL/CSA.

Not available with JXX actuators, D3, H, H9, Y3, Y4 bushings and I seal.
Terminal bend radii and lead-in manufacturing option.

### R RIGHT ANGLE WITH PCB

8121SD9RGE
**SPDT**

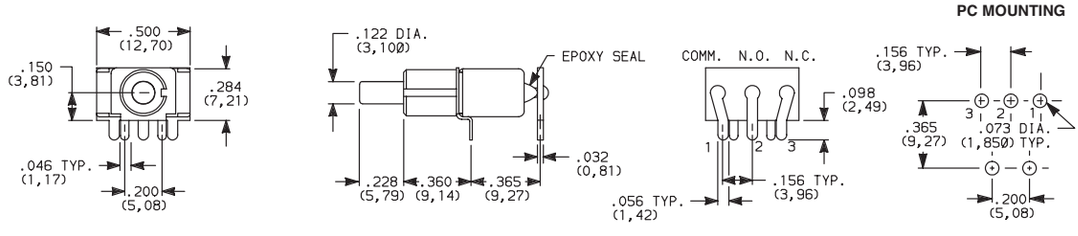


Not available with JXX actuators, D3, H, H9, Y3, Y4 bushings, I seal option.
R termination not UL/CSA approved.

### R2 RIGHT ANGLE WITH PCB, REVERSED TERMINALS

8121SD9R2GE
**SPDT**

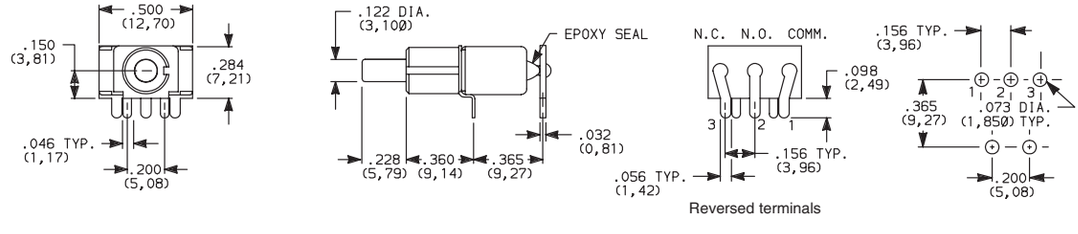


Not available with JXX actuators, D3, H, H9, Y3, Y4 bushings, I seal option.
R2 termination not UL/CSA approved.

Third Angle Projection

*Dimensions are shown: Inches (mm)*
*Specifications and dimensions subject to change*

## TERMINATIONS

### AV2 VERTICAL RIGHT ANGLE, PC THRU-HOLE, .150" PITCH

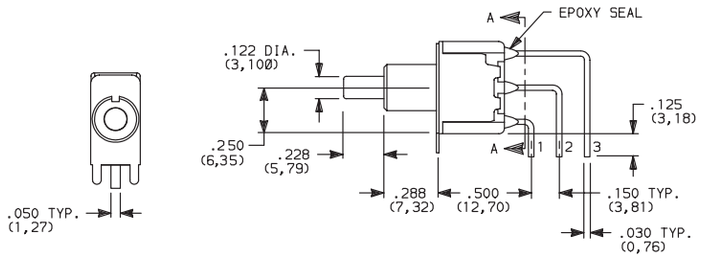


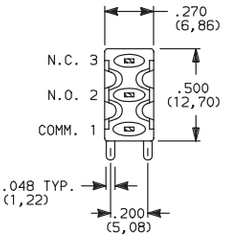


SECTION A-A

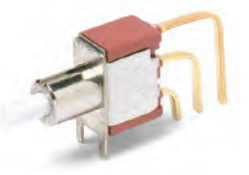

8121SD9AV2GE
**SPDT**

### AV3 VERTICAL RIGHT ANGLE, SNAP-IN,, PC THRU-HOLE, .150" PITCH

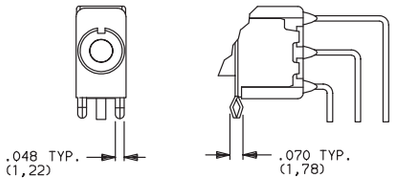


### AV1 VERTICAL RIGHT ANGLE, EXTENDED, PC THRU-HOLE, .150" PITCH

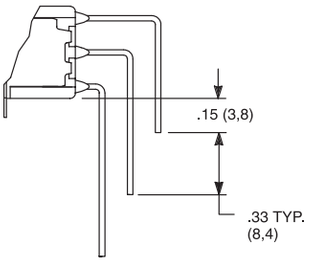


**PC MOUNTING**

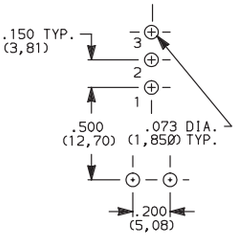


Not available with JXX actuators and I seal.
Terminal bend radii and lead-in manufacturing option.

### AV2 VERTICAL RIGHT ANGLE, PC THRU-HOLE, .150" PITCH

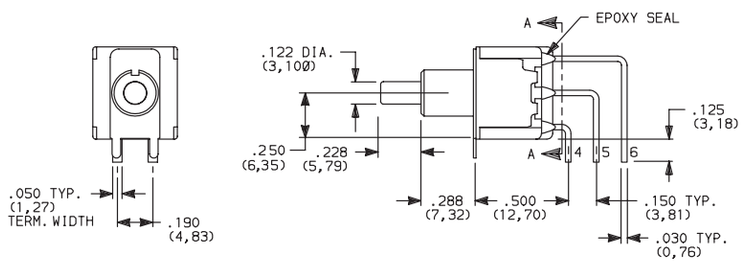


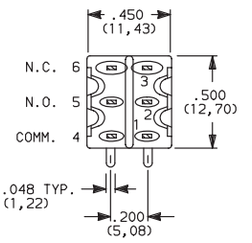


SECTION A-A

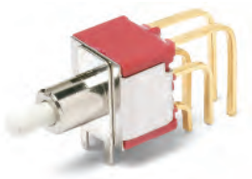

8221SD9AV2GE
**DPDT**

### AV3 VERTICAL RIGHT ANGLE, SNAP-IN, PC THRU-HOLE, .150" PITCH

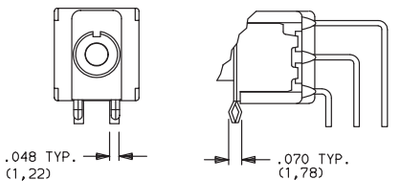


### AV1 VERTICAL RIGHT ANGLE, EXTENDED, PC THRU-HOLE, .150" PITCH

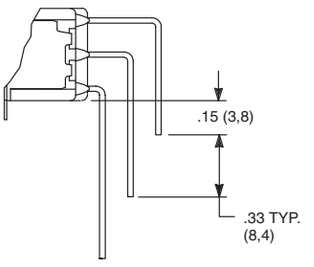


**PC MOUNTING**

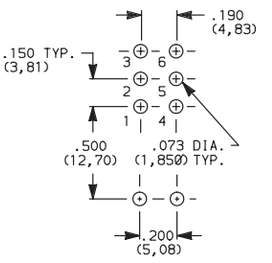


Not available with JXX actuators and I seal.
Terminal bend radii and lead-in manufacturing option.

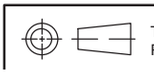

Third Angle Projection

*Dimensions are shown: Inches (mm)*
*Specifications and dimensions subject to change*

# 8020 Series
# Snap-acting Momentary Pushbutton Switches

## TERMINATIONS

**AV2** VERTICAL RIGHT ANGLE, PC THRU-HOLE, 150" PITCH

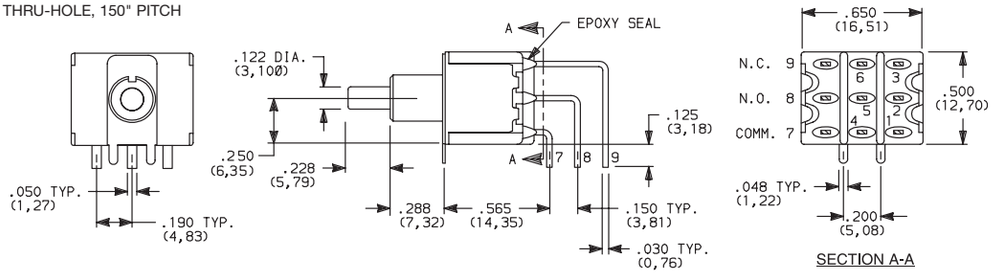


8321SD9AV2GE
**3PDT**

**AV1** VERTICAL RIGHT ANGLE, EXTENDED, PC THRU-HOLE, .150" PITCH

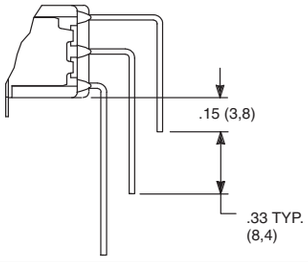


**AV3** VERTICAL RIGHT ANGLE, SNAP-IN, PC THRU-HOLE, .150" PITCH

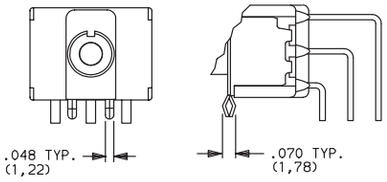


Not available with JXX actuators and I seal.
Terminal bend radii and lead-in manufacturing option.

**PC MOUNTING**

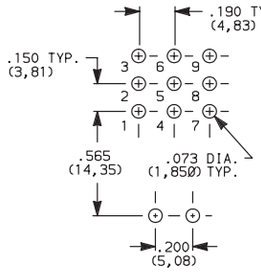


**AV2** VERTICAL RIGHT ANGLE, PC THRU-HOLE, 150" PITCH

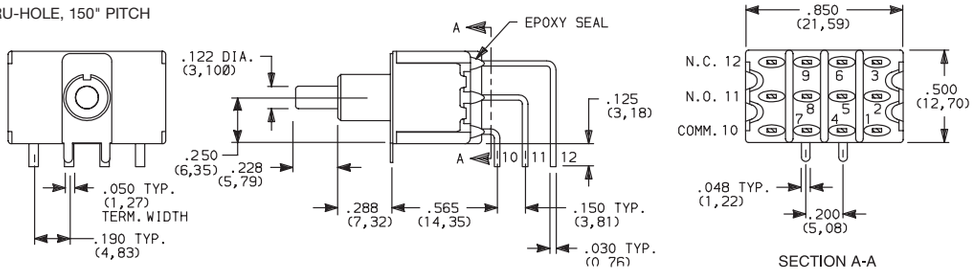


8421SD9AV2GE
**4PDT**

**AV1** VERTICAL RIGHT ANGLE, EXTENDED, PC THRU-HOLE, .150" PITCH

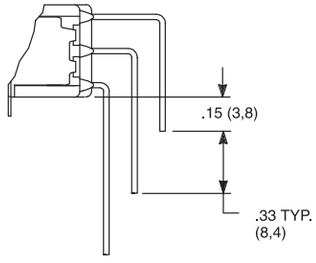


**AV3** VERTICAL RIGHT ANGLE, SNAP-IN, PC THRU-HOLE, .150" PITCH

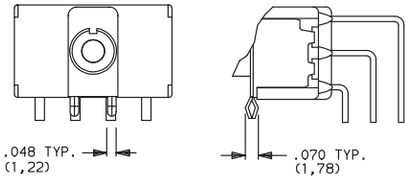


Not available with JXX actuators and I seal.
Terminal bend radii and lead-in manufacturing option.

**PC MOUNTING**

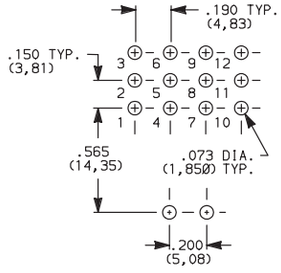


**V2, V6, V7, V8** VERTICAL MOUNT, V-BRACKET

**V61** VERTICAL MOUNT, V-BRACKET, SNAP-IN

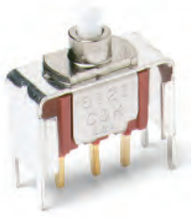

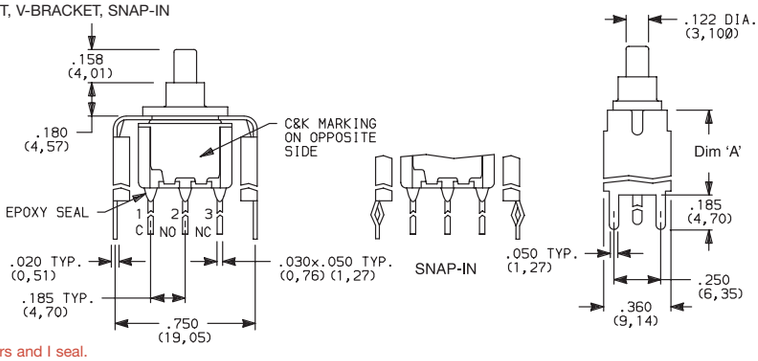


8121SD3__GE
**SPDT**

Not available with JXX actuators and I seal.

**PC MOUNTING**

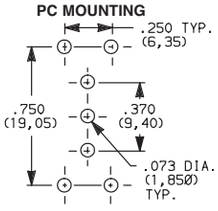


| OPTION CODE | DIM 'A' |
|---|---|
| V2 | .555 (14,10) |
| V6, V61 | .460 (11,68) |
| V7 | .630 (16,00) |
| V8 | .953 (24,21) |

Third Angle Projection

*Dimensions are shown: Inches (mm)*
*Specifications and dimensions subject to change*

## TERMINATIONS

### V2, V6, V7, V8 VERTICAL MOUNT, V-BRACKET
### V61 VERTICAL MOUNT, V-BRACKET, SNAP-IN

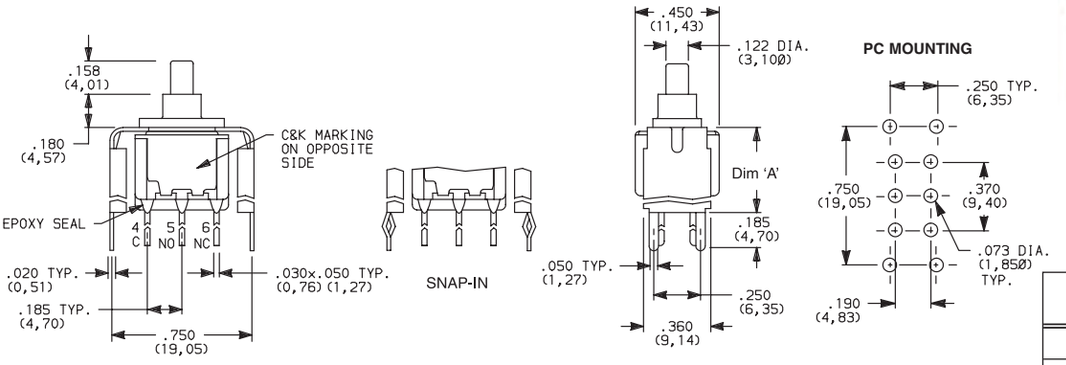

8221SD3__GE
**DPDT**

| OPTION CODE | DIM 'A' |
|---|---|
| V2 | .555 (14,10) |
| V6, V61 | .460 (11,68) |
| V7 | .630 (16,00) |
| V8 | .953 (24,21) |

Not available with JXX actuators and I seal.

### V2, V7, V8 VERTICAL MOUNT, V-BRACKET

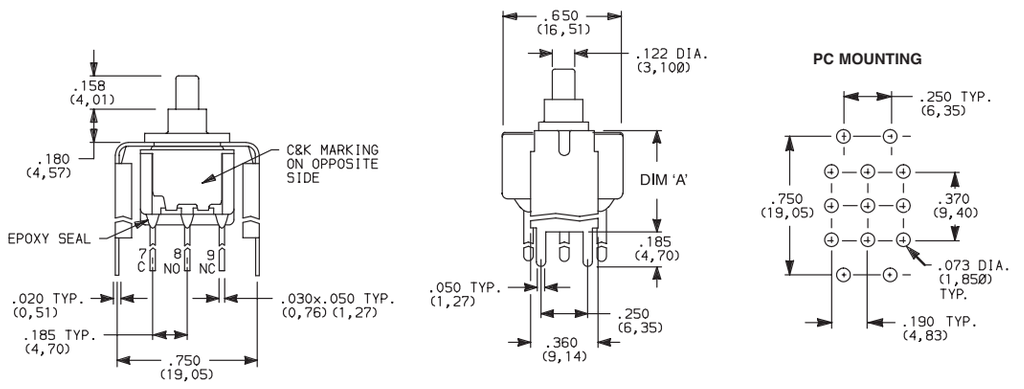

8321SD3__GE
**3PDT**

| OPTION CODE | DIM 'A' |
|---|---|
| V2 | .555 (14,10) |
| V7 | .630 (16,00) |
| V8 | .953 (24,21) |

Not available with JXX actuators and I seal.

### V2, V7, V8 VERTICAL MOUNT, V-BRACKET

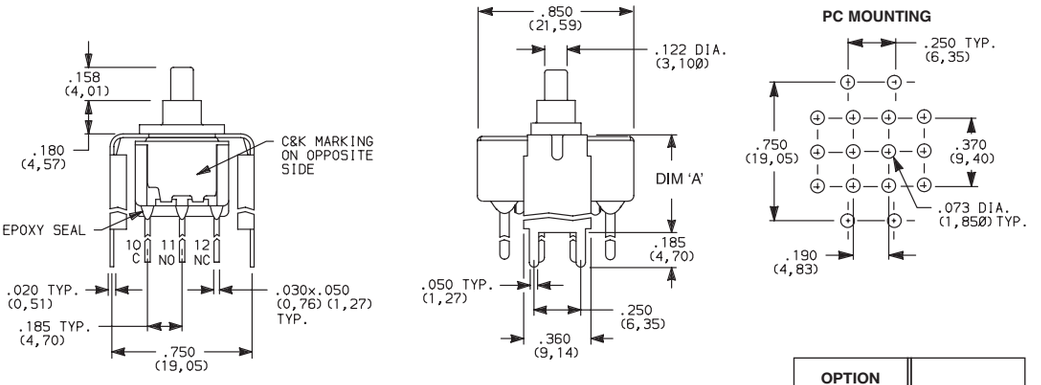


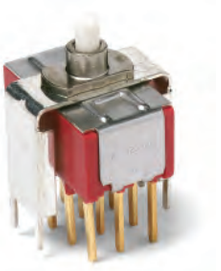

8421SD3__GE
**4PDT**

| OPTION CODE | DIM 'A' |
|---|---|
| V2 | .555 (14,10) |
| V7 | .630 (16,00) |
| V8 | .953 (24,21) |

Not available with JXX actuators and I seal.

Third Angle Projection

*Dimensions are shown: Inches (mm)*
*Specifications and dimensions subject to change*

# 8020 Series
# Snap-acting Momentary Pushbutton Switches

## TERMINATIONS

**V3, V4, V9** VERTICAL MOUNT, V-BRACKET

**V31** VERTICAL MOUNT, V-BRACKET, SNAP-IN

8121SD3__GE
**SPDT**

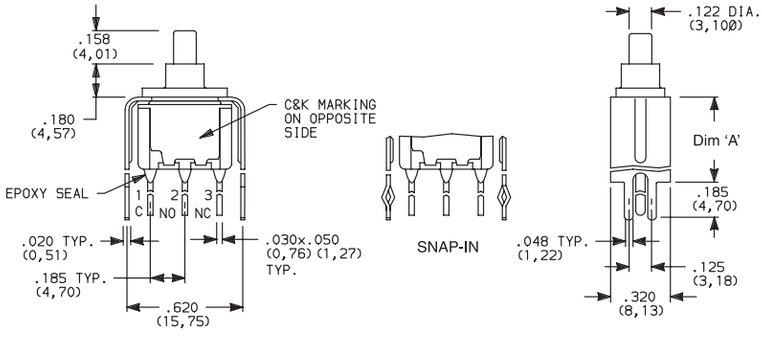


PC MOUNTING

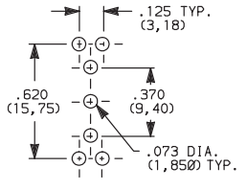


| OPTION CODE | DIM 'A' |
|---|---|
| V3, V31 | .460 (11,68) |
| V4 | .630 (16,00) |
| V9 | 1.150 (29,21) |

Not available with J8X actuators and I seal.

**V3, V4, V9** VERTICAL MOUNT, V-BRACKET

**V31** VERTICAL MOUNT, V-BRACKET, SNAP-IN

8221SD3__GE
**DPDT**

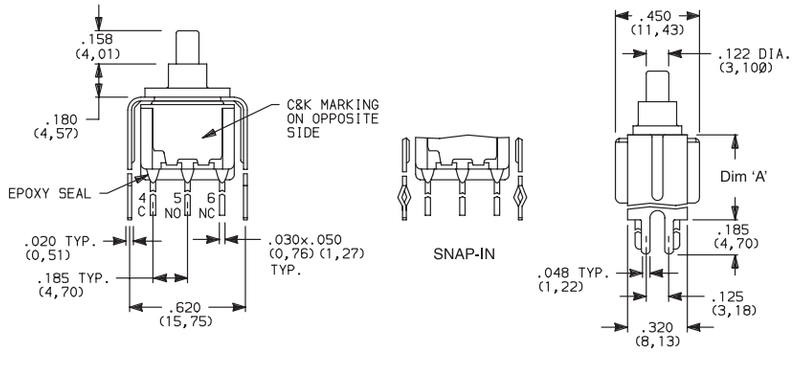


PC MOUNTING

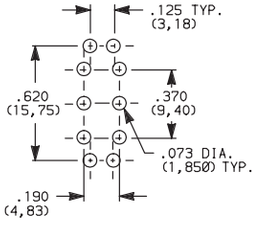


| OPTION CODE | DIM 'A' |
|---|---|
| V3, V31 | .460 (11,68) |
| V4 | .630 (16,00) |
| V9 | 1.150 (29,21) |

Not available with J8X actuators and I seal.

**V4, V9** VERTICAL MOUNT, V-BRACKET

8321SD3V4GE
**3PDT**

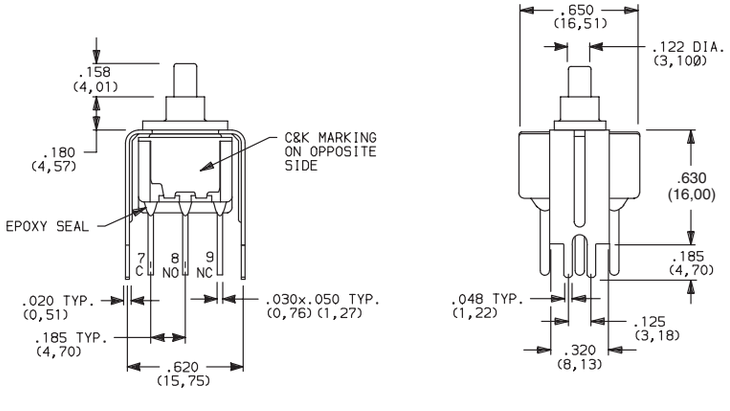


PC MOUNTING

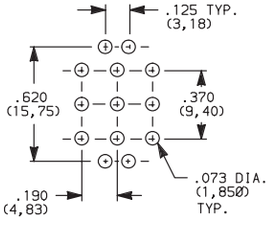


| OPTION CODE | DIM 'A' |
|---|---|
| V4 | .630 (16,00) |
| V9 | 1.150 (29,21) |

Not available with JXX actuators and I seal.

Third Angle Projection

*Dimensions are shown: Inches (mm)*
*Specifications and dimensions subject to change*

## TERMINATIONS

**V4, V9** VERTICAL MOUNT, V-BRACKET

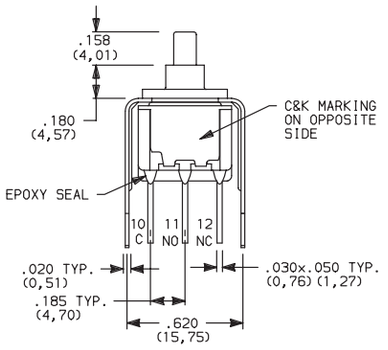


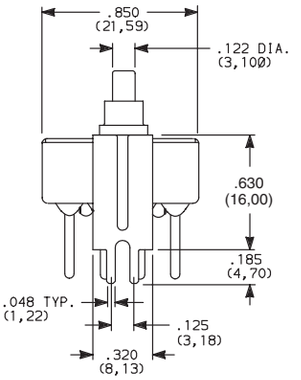


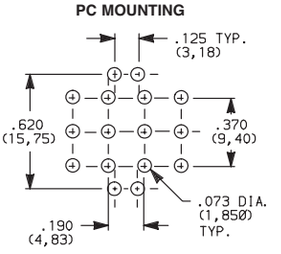


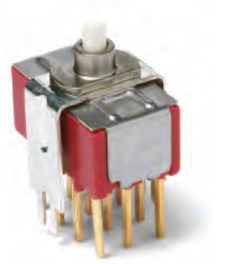

8421SD3V4GE
**4PDT**

| OPTION CODE | DIM 'A' |
|---|---|
| V4 | .630 (16,00) |
| V9 | 1.150 (29,21) |

Not available with JXX actuators and I seal.

## CONTACT MATERIAL

| OPTION CODE | CONTACT MATERIAL | TERMINAL PLATING | RATINGS | |
|---|---|---|---|---|
| B | GOLD [1] | GOLD [1] | LOW LEVEL/DRY CIRCUIT | 8x25 MODELS ONLY: 0.4 MAX. @ 20 V AC OR DC MAX. |
| P | | MATTE-TIN [4] | | |
| G | GOLD OVER SILVER [2,3] | GOLD [3] | LOW LEVEL/DRY CIRCUIT OR POWER | 8X21, U8X1 MODELS ONLY: 0.4 VA MAX @ 20 V AC OR DC MAX. OR 1 AMP @ 120 V AC OR 28 V DC. |
| R | | MATTE-TIN [4] | | |

* Note: See Technical Data section of this catalog for RoHS compliant and compatible definitions and specifications.

[1] ALL CONTACTS & TERMINALS: Copper alloy, with gold plate over nickel plate.
[2] N.O. AND N.C. CONTACTS: Coin silver, with gold plate over nickel plate.
[3] COMMON CONTACTS & ALL TERMINALS: Copper alloy, with gold plate over nickel plate.
[4] TERMINALS: Copper alloy, with matte-tin over nickel plate.

**NOTE:** Any models supplied with B, P, R or G contact material are RoHS compliant.

U811-U841 models with all options (except R, R2 terminations) when ordered with mandatory G or R contact material.

B or P contact material must be ordered with 8X25 models.

G or R contact material must be ordered with 8X21, U8X1 models.

P or R contact material not available with Z, Z3 terminations.

## SEAL

**E** EPOXY SEAL

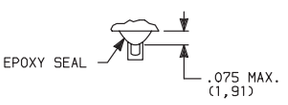


**I** EPOXY POTTED BASE

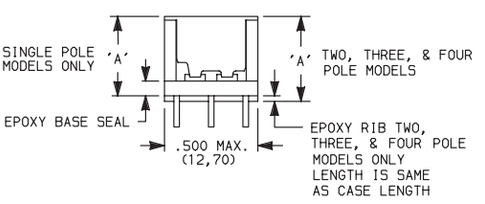


| NO. POLES | DIM 'A' |
|---|---|
| SP | .410 (10,41) |
| DP | .440 (11,18) |
| 3P | .505 (12,83) |
| 4P | .505 (12,83) |

**NOTE:** Available with C, W-W4, Z, Z3 terminations only.

Third Angle Projection

*Dimensions are shown: Inches (mm)*
*Specifications and dimensions subject to change*

# 8020 Series
# Snap-acting Momentary Pushbutton Switches

## AVAILABLE HARDWARE

**Cap**

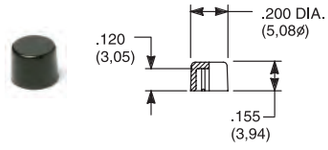


**PART NO.**

| | |
|---|---|
| 708901000 | WHITE |
| 708902000 | BLACK |
| 708903000 | RED |
| 708904000 | ORANGE |
| 708905000 | YELLOW |
| 708906000 | GREEN |
| 708907000 | BLUE |
| 708909000 | GRAY |

Material: Nylon
Finish: Gloss

**Cap**

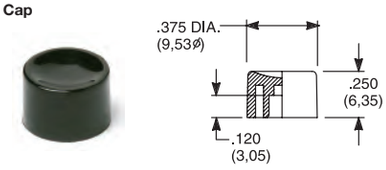


**PART NO.**

| | |
|---|---|
| 752701000 | WHITE |
| 752702000 | BLACK |
| 752703000 | RED |
| 752704000 | ORANGE |
| 752705000 | YELLOW |
| 752706000 | GREEN |
| 752707000 | BLUE |
| 752709000 | GRAY |

Material: Nylon
Finish: Gloss

**Cap**

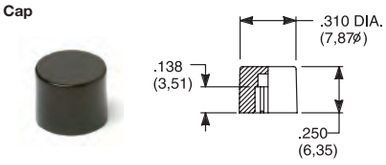


**PART NO.**

| | |
|---|---|
| 801801000 | WHITE |
| 801802000 | BLACK |
| 801803000 | RED |
| 801804000 | ORANGE |
| 801805000 | YELLOW |
| 801806000 | GREEN |
| 801807000 | BLUE |
| 801809000 | GRAY |

Material: Nylon
Finish: Gloss

**Cap, Snap-fitting plunger**

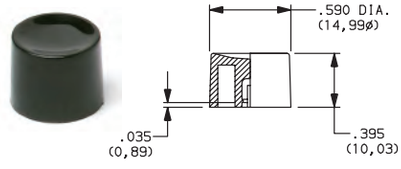


**PART NO.**

| | |
|---|---|
| 452D01000 | WHITE |
| 452D02000 | BLACK |
| 452D03000 | RED |
| 452D04000 | ORANGE |
| 452D05000 | YELLOW |
| 452D06000 | GREEN |
| 452D07000 | BLUE |
| 452D09000 | GRAY |

Material: Nylon
Finish: Gloss

**Cap, Snap-fitting plunger**

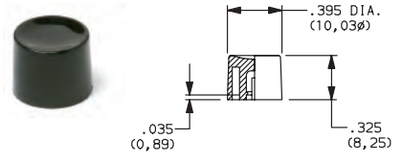


**PART NO.**

| | |
|---|---|
| 894101000 | WHITE |
| 894102000 | BLACK |
| 894103000 | RED |
| 894104000 | ORANGE |
| 894105000 | YELLOW |
| 894106000 | GREEN |
| 894107000 | BLUE |
| 894109000 | GRAY |

Material: Nylon
Finish: Gloss

**Cap, J80, J81, J82, J83 & J84 options only**

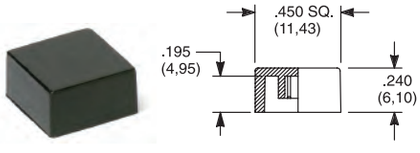


**PART NO.**

| | |
|---|---|
| 484601000 | WHITE |
| 484602000 | BLACK |
| 484603000 | RED |
| 484604000 | ORANGE |
| 484605000 | YELLOW |
| 484606000 | GREEN |
| 484607000 | BLUE |
| 484609000 | GRAY |

Material: Nylon
Finish: Gloss

**PART NO.**

| | |
|---|---|
| 798201000 | WHITE |
| 798202263 | BLACK |
| 798203000 | RED |
| 798204000 | ORANGE |
| 798205000 | YELLOW |
| 798206000 | GREEN |
| 798207000 | BLUE |
| 798209000 | GRAY |

Material: Nylon
Finish: Matte

**Frame**

**PART NO.**

615602263 BLACK

Material: Nylon
Finish: Matte

**Frame**

**PART NO.**

613302263 BLACK

Material: Nylon
Finish: Matte

**Cap, J85 & J95 options only**

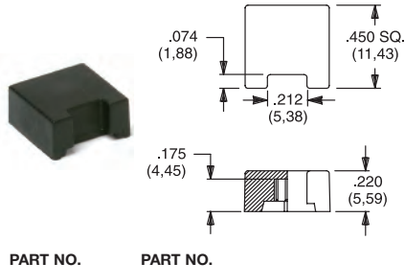


**PART NO.**

| | |
|---|---|
| 459701000 | WHITE |
| 459702000 | BLACK |
| 459703000 | RED |
| 459704000 | ORANGE |
| 459705000 | YELLOW |
| 459706000 | GREEN |
| 459707000 | BLUE |
| 459709000 | GRAY |

Material: Nylon
Finish: Gloss

**PART NO.**

| | |
|---|---|
| 476801000 | WHITE |
| 476802000 | BLACK |
| 476803000 | RED |
| 476804000 | ORANGE |
| 476805000 | YELLOW |
| 476806000 | GREEN |
| 476807000 | BLUE |
| 476809000 | GRAY |

Material: Nylon
Finish: Matte

**Fits Z3 Termination female connector**

**PART NO.**

530100000

Available in loose pieces.

NOTE: Additional nuts, locking rings and lockwashers available separately, see section "Technical Data and Additional Hardware".
Other cap & frame colors available, consult Customer Service Center.

Third Angle Projection

*Dimensions are shown: Inches (mm)*
*Specifications and dimensions subject to change*

## AVAILABLE HARDWARE

Frames snap into panel opening and are independent from switch mounting. Accurate positioning of the PC mounted switch relative to the panel opening is necessary to provide proper clearance between actuator and frame. Available in two basic styles and four panel thicknesses .047-.125 in. Material: Nylon. Finish: Matte.

**TYPICAL APPLICATION**

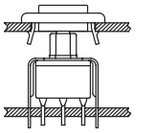

| .047" (1,19) PANEL THK. | .062" (1,57) PANEL THK. | .090" (2,29) PANEL THK. | .125" (3,18) PANEL THK. |
|---|---|---|---|
| **PART NO.** | **PART NO.** | **PART NO.** | **PART NO.** |
| 432502263 | 432602263 | 432702263 | 432802263 BLACK |

**PANEL MOUNTING**

For part numbers
4325xxxxx, 4326xxxxx

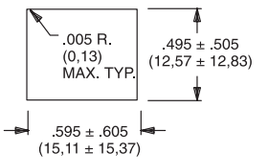


For part numbers
4327xxxxx, 4328xxxxx

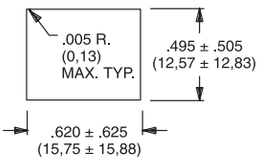


Panel Inserts

Above frames (part nos. 432XXXXXX) are also available with insert which accepts LED for indicator light assembly. Order insert separately from frame. Blank insert panel (without hole for LED) also available. **LED not included.**

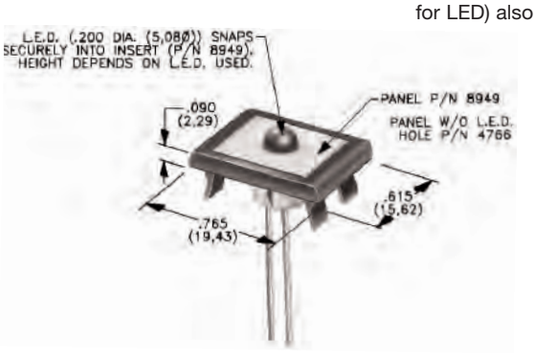


| PANEL INSERT WITH HOLE FOR LED | BLANK PANEL INSERT WITHOUT HOLE FOR LED |
|---|---|
| **PART NO.** | **PART NO.** |
| 894902000 | 476602000 BLACK |

Special colors, custom markings available, consult Customer Service Center.

## LED INFORMATION

SWITCHES WITH LED SUPPLIED: J85, J95 OPTIONS:
Rectangular LEDs are supplied on 8020 Series pushbutton switches with J85 and J95 options. These LEDs are factory installed and are not replaceable. The following specifications apply:

| OPTION CODE | COLOR | TYP. INTENSITY | TYP. FORWARD VOLTAGE | TYP. FORWARD CURRENT | MAX RATINGS AT 25ºC AMBIENT TEMPERATURE | | |
|---|---|---|---|---|---|---|---|
| | | | | | FORWARD VOLTAGE | CONTINUOUS FORWARD CURRENT | POWER DISSIPATION |
| 6 | Green | 1.0 mcd | 2.1 V | 20 mA | 2.5 V | 50 mA | 125 mW |
| 3 | Red* | 0.5 mcd | | 10 mA | | 30 mA | 75 mW |
| 5 | Yellow | 4.0 mcd | | 20 mA | | 50 mA | 125 mW |

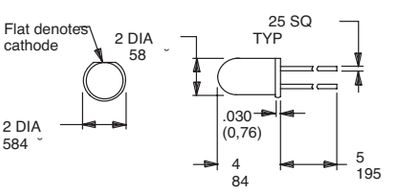


Suggested LED for J82 & J84 options
Dimensions for reference only

**Process Information:** Soldering to LED leads must be completed within 5 seconds at 500ºF (260ºC) maximum.
**Caution:** Circuit elements must limit forward current of LED to 50mA max. continuous.
* Extra-bright red LED available (typ. intensity 4.5 mcd), consult Customer Service Center.
LEDs are not supplied with J82, J84 options. LED snaps into switch frame surrounding actuator and is wired externally.

Third Angle Projection

*Dimensions are shown: Inches (mm)*
*Specifications and dimensions subject to change*

# E010 Series
# Sealed Momentary Pushbutton Switches

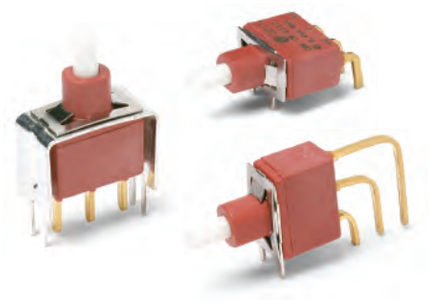

## Features/Benefits

- *Process sealed, withstands soldering and cleaning*
- *Long life contact design*
- *Snap-fitting plunger available, accepts a variety of caps*
- *RoHS compliant models available*

## Typical Applications

- *Instrumentation*
- *Telecommunications and networking equipment*
- *Computers and peripherals*

Models Available

## Specifications

CONTACT RATING: Q contact material: 4 AMPS @ 125 V AC or 28 V DC. See page A-50 for additional ratings.

ELECTRICAL LIFE: 40,000 make-and-break cycles at full load.

CONTACT RESISTANCE: Below 20 mΩ typ. initial @ 2–4 V DC, 100 mA, for both silver and gold plated contacts.

INSULATION RESISTANCE: $10^9$Ω min.

DIELECTRIC STRENGTH: 1000 Vrms min. @ sea level.

OPERATING TEMPERATURE: -30°C to 75°C.

CAP INSTALLATION FORCE: 10 lbs. max. permissible.

SOLDERABILITY: Per MIL-STD-202F method 208D, or EIA RS-186E method 9 (1 hour steam aging).

**NOTE:** Any models supplied with P, Q, B or G contact material are RoHS compliant.

**NOTE:** Specifications and materials listed above are for switches with standard options. For information on specific and custom switches, consult Customer Service Center.

## Materials

CASE & BUSHING: Glass filled nylon 6/6, flame retardant (UL 94V-0).

PLUNGER: Glass filled nylon or glass filled polyester (PBT) (UL 94V-0), with internal o-ring seal standard.

SWITCH SUPPORT: Brass or steel, matte-tin plated.

SWITCH SUPPORT RETAINER: Stainless steel.

END CONTACTS: Q contact material: Coin silver, silver plated. See A-50 for additional ratings.

CENTER CONTACTS & ALL TERMINALS: Q contact material: Copper alloy, silver plated. See page A-50 for additional ratings.

TERMINAL SEAL: Epoxy.

HARDWARE: Nut & locking ring-Brass, nickel plated. Lockwasher-Steel, nickel plated.

## Build-A-Switch

To order, simply select desired option from each category and place in the appropriate box. Available options are shown and described on pages A-47 thru A-51. For additional options not shown in catalog, consult Customer Service Center. All models are process sealed to withstand machine soldering temperatures and pressure wash cleaning methods.

**Switch Function**
**E112** SPDT On-Mom.

**Plunger**
**S** .222" high
**L** .338" high
**M** .331" high, snap-fitting

**Bushing**
**D1** Unthreaded
**Y** Threaded, keyway

**Terminations**
**A** Right angle, PC thru-hole
**AV2** Vertical right angle, PC thru-hole
**C** PC Thru-hole
**A3** Right angle, snap-in, PC thru-hole
**AV3** Vertical right angle, snap-in, PC thru-hole
**R2** Right angle with PCB
**V3** .460" high, V-bracket
**V4** .630" high, V-bracket
**V6** .460" high, V-bracket
**V8** .953" high, V-bracket
**V31** .460" high, snap-in V-bracket
**V81** .953" high, snap-in V-bracket
**V91** 1.150" high, snap-in V-bracket
**W** .750" long, wire wrap
**Z** Solder lug

**Contact Material**
**B** Gold
**P** Gold, matte-tin
**Q** Silver
**G** Gold over silver

**Seal**
**E** Epoxy

*Dimensions are shown: Inches (mm)*
*Specifications and dimensions subject to change*

# E010 Series
# Sealed Momentary Pushbutton Switches

## SWITCH FUNCTION

| NO. POLES | MODEL NO. | SWITCH FUNCTION POS. 1 (C&K marking this side) | SWITCH FUNCTION POS. 2 (C&K marking this side) | CONNECTED TERMINALS POS. 1 (C&K marking this side) | CONNECTED TERMINALS POS. 2 (C&K marking this side) | SCHEMATIC |
|---|---|---|---|---|---|---|
| SP | E112 | ON | MOM. | 2-1 | 2-3 | SPDT: NC 1, 2 (COMM), 3 NO |

**SPDT**

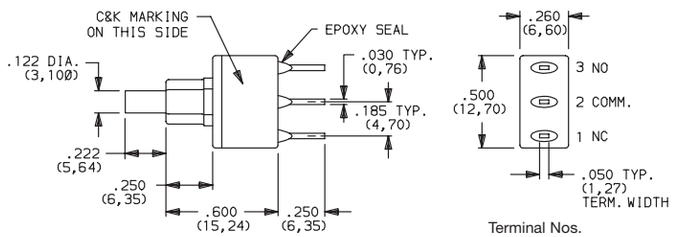


Part number shown: E112SD1CQE

MOM. = Momentary

All models c UL us with all options when ordered with G or Q contact material.

## PLUNGER

**S** .218" HIGH

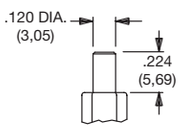


Standard with D1 bushing (as shown).

† Subtract .100 (2,54) from plunger length when ordered with Y bushing.

**L** .338" HIGH

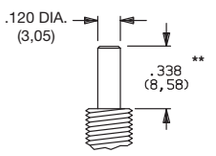


Standard with Y bushing (as shown).

** Add .100 (2,54) from plunger length when ordered with D1 bushing.

**M** .331" HIGH, SNAP-FITTING

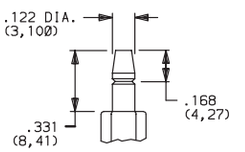


**NOTE:** Caps available for all plunger options, see pages A-50 and A-51.

## BUSHING

**D1** UNTHREADED

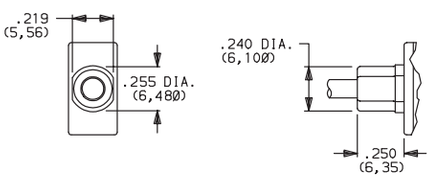


S plunger standard with D1 bushing.

**Y** THREADED, KEYWAY

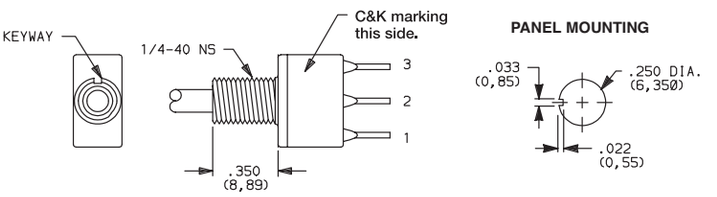


L plunger standard with Y bushing. Available only with C, Z terminations.
Hardware: One dress nut part number 299D01201, one hex nut and lockwasher supplied standard.

**Withstands 4 in./lbs. without distortion.**

**NOTE:** Internal o-ring actuator seal standard for all bushing options.

Third Angle Projection

*Dimensions are shown: Inches (mm)*
*Specifications and dimensions subject to change*

# E010 Series
# Sealed Momentary Pushbutton Switches

## TERMINATIONS

### C PC THRU-HOLE

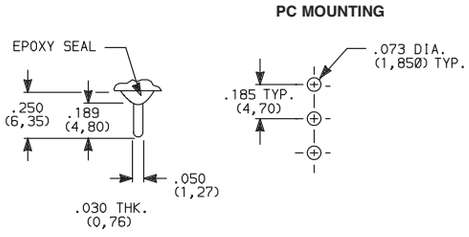


**SPDT**

### Z SOLDER LUG

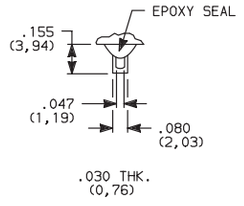


**SPDT** Not available with P contact materials.

### W WIRE WRAP

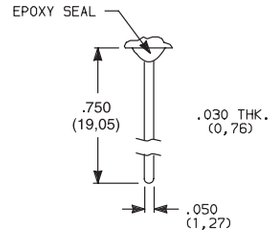


**SPDT**

### A RIGHT ANGLE, PC THRU-HOLE

E112SD1ABE
**SPDT**

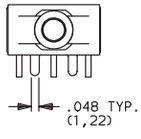


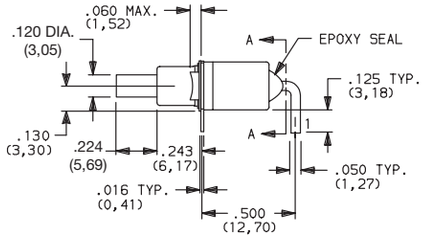


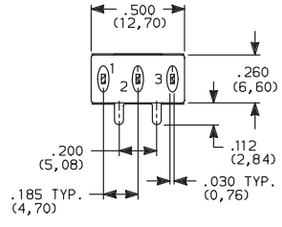


SECTION A-A

### A3 RIGHT ANGLE, SNAP-IN, PC THRU-HOLE

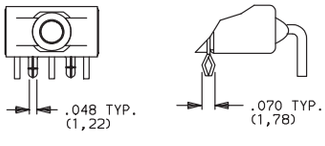


### AW RIGHT ANGLE, EXTENDED, PC THRU-HOLE

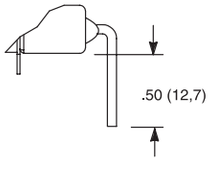


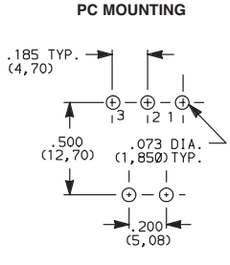


**NOTE:** Terminal bend radii and lead-in manufacturing option.
Available with D1 bushing only.

### AV2 VERTICAL RIGHT ANGLE, PC THRU-HOLE, .150" PITCH

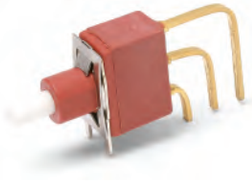

E112SD1AV2BE
**SPDT**

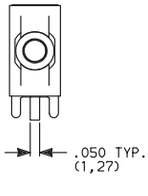


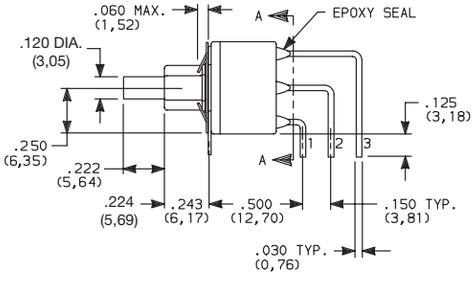


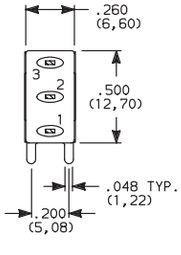


SECTION A-A

### AV3 VERTICAL RIGHT ANGLE, SNAP-IN, PC THRU-HOLE, .150" PITCH

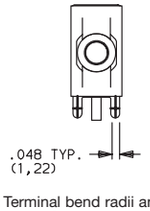


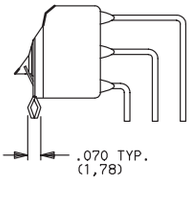


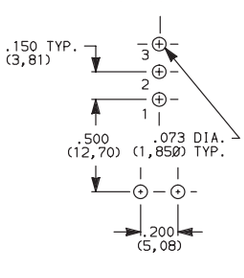


**NOTE:** Terminal bend radii and lead-in manufacturing option.
Available with D1 bushing only.

Third Angle Projection

*Dimensions are shown: Inches (mm)*
*Specifications and dimensions subject to change*

## TERMINATIONS

### R2 RIGHT ANGLE WITH PCB

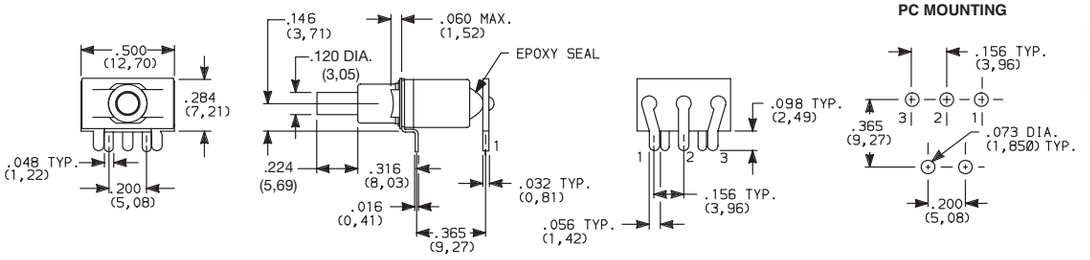

E112SD1R2BE
**SPDT**

**NOTE:** Available with D1 bushing and B contact material only.

### V3, V4 VERTICAL MOUNT, V-BRACKET
### V31, V91 VERTICAL MOUNT, V-BRACKET, SNAP-IN

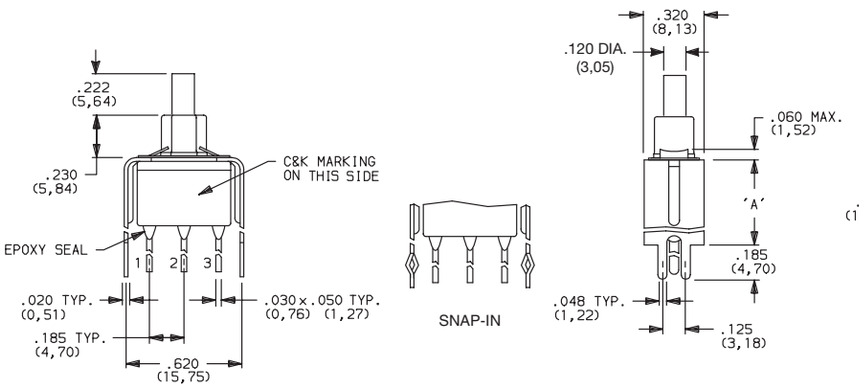

E112SD1__BE
**SPDT**

| OPTION CODE | DIM 'A' |
|---|---|
| V3, V31 | .460 (11,68) |
| V4 | .630 (16,00) |
| V91 | 1.150 (29,21) |

**NOTE:** Available with D1 bushing only.

### V6, V8 VERTICAL MOUNT, V-BRACKET
### V81 VERTICAL MOUNT, V-BRACKET, SNAP-IN

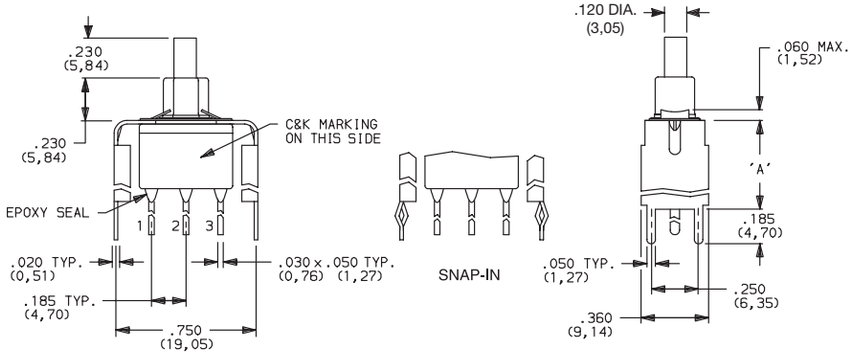

E112SD1__BE
**SPDT**

| OPTION CODE | DIM 'A' |
|---|---|
| V6 | .460 (11,68) |
| V8, V81 | .953 (24,21) |

**NOTE:** Available with D1 bushing only.

Third Angle Projection

*Dimensions are shown: Inches (mm)*
*Specifications and dimensions subject to change*

# E010 Series
# Sealed Momentary Pushbutton Switches

## CONTACT MATERIAL

| OPTION CODE | CONTACT MATERIAL | TERMINAL PLATING | RATINGS | |
|---|---|---|---|---|
| B | GOLD [1] | GOLD [1] | LOW LEVEL/DRY CIRCUIT | 0.4 VA MAX. @ 20 V AC OR DC MAX. |
| P | | MATTE-TIN [6] | | |
| Q | SILVER [4,5] | SILVER [5] | POWER | 4 AMPS @ 125 V AC 0R 28 V DC. |
| G | GOLD OVER SILVER [2,3] | GOLD [3] | LOW LEVEL/DRY CIRCUIT OR POWER | 0.4 VA MAX. @ 20 V AC OR DC MAX. OR 4 AMPS @ 125 V AC 0R 28 V DC. |

* Note: See Technical Data section of this catalog for RoHS compliant and compatible definitions and specifications.

[1] CONTACTS & TERMINALS: Copper alloy, with gold plate over nickel plate.
[2] END CONTACTS: Coin silver, with gold plate over nickel plate.
[3] CENTER CONTACTS & ALL TERMINALS: Coin silver, with gold plate over nickel plate.
[4] END CONTACTS: Coin silver, silver plated.
[5] CENTER CONTACTS & ALL TERMINALS: Copper alloy, silver plated.
[6] TERMINALS: Copper alloy, with matte-tin over nickel plate.

**NOTE:** Any models supplied with P, Q, B or G contact material are RoHS compliant.

All models c UL us with all options when ordered with G or Q contact material.
B contact material standard with all terminations except C, Z.
B contact material must be ordered with R2 terminations.
Q contact material standard with C, Z terminations.
P contact materials not available with Z terminations.

## SEAL

**E** EPOXY SEAL

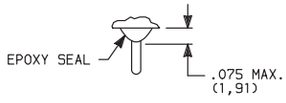


## AVAILABLE HARDWARE

**Cap**

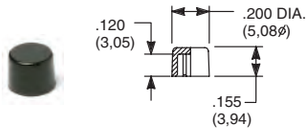


**PART NO.**
**708901000** WHITE
**708902000** BLACK
**708903000** RED

Material: Nylon
Finish: Gloss

**Cap**

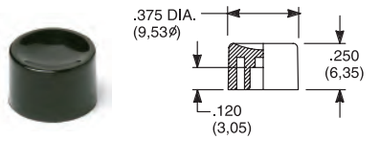


**PART NO.**
**752701000** WHITE
**752702000** BLACK
**752703000** RED

Material: Nylon
Finish: Gloss

**Cap**

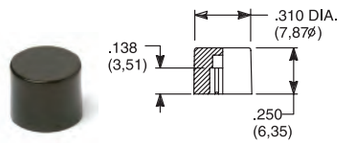


**PART NO.**
**801801000** WHITE
**801802000** BLACK
**801803000** RED

Material: Nylon
Finish: Gloss

**NOTE:** Additional nuts, locking rings and lockwashers available separately, see section "Technical Data and Additional Hardware".
Other cap colors available, consult Customer Service Center.

Third Angle Projection

*Dimensions are shown: Inches (mm)*
*Specifications and dimensions subject to change*

## AVAILABLE HARDWARE

**Cap, Snap-fitting plunger**

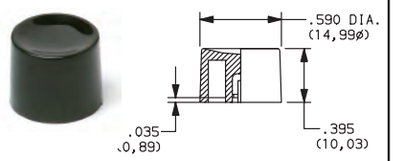


**PART NO.**

| | |
|---|---|
| 452D01000 | WHITE |
| 452D02000 | BLACK |
| 452D03000 | RED |

Material: Nylon
Finish: Gloss

**Cap, Snap-fitting plunger**

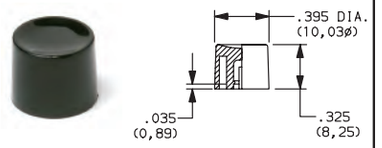


**PART NO.**

| | |
|---|---|
| 894101000 | WHITE |
| 894102000 | BLACK |
| 894103000 | RED |

Material: Nylon
Finish: Gloss

**Cap**

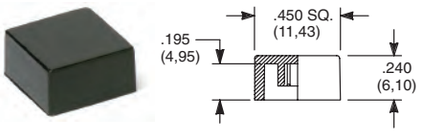


**PART NO.**

| | |
|---|---|
| 484601000 | WHITE |
| 484602000 | BLACK |
| 484603000 | RED |

Material: Nylon
Finish: Gloss

**PART NO.**

| | |
|---|---|
| 798201000 | WHITE |
| 798202263 | BLACK |
| 798203000 | RED |

Material: Nylon
Finish: Matte

**NOTE:** Additional nuts, locking rings and lockwashers available separately, see section "Technical Data and Additional Hardware".
Other cap colors available, consult Customer Service Center.

Frames snap into panel opening and are independent from switch mounting. Accurate positioning of the PC mounted switch relative to the panel opening is necessary to provide proper clearance between actuator and frame. Available in two basic styles and four panel thicknesses .047-.125 in. Material: Nylon. Finish: Matte.

**TYPICAL APPLICATION**

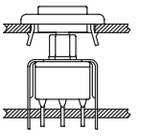

| .047" (1,19) PANEL THK. | .062" (1,57) PANEL THK. | .090" (2,29) PANEL THK. | .125" (3,18) PANEL THK. |
|---|---|---|---|
| **PART NO.** | **PART NO.** | **PART NO.** | **PART NO.** |
| 432502263 | 432602263 | 432702263 | 432802263 BLACK |

**PANEL MOUNTING**

For part numbers
4325xxxxx, 4326xxxxx

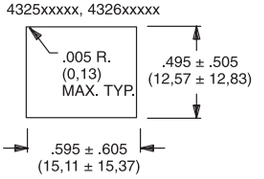


For part numbers
4327xxxxx, 4328xxxxx

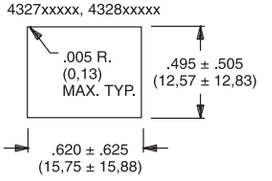


**Panel Inserts**

Above frames (part nos. 432XXXXXX) are also available with insert which accepts LED for indicator light assembly. Order insert separately from frame. Blank insert panel (without hole for LED) also available. **LED not included.**

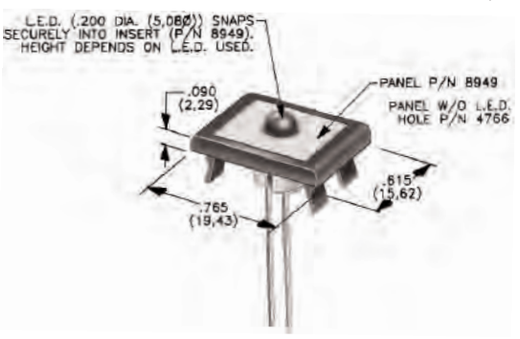


| PANEL INSERT WITH HOLE FOR LED | BLANK PANEL INSERT WITHOUT HOLE FOR LED |
|---|---|
| **PART NO.** | **PART NO.** |
| 894902000 | 476602000 BLACK |

Special colors, custom markings available, consult Customer Service Center.

Third Angle Projection

*Dimensions are shown: Inches (mm)*
*Specifications and dimensions subject to change*

# 8060 Series
# Alternate Action and Momentary Pushbutton Switches

## Features/Benefits

- *Long travel*
- *Available with LED*
- *Long life contact design*
- *Epoxy terminal seal compatabile with bottom wash cleaning*
- *RoHS compliant models available*

## Typical Applications

- *Instrumentation*
- *Computers and peripherals*
- *Telecommunications and networking equipment*

Models Available

## Specifications

CONTACT RATING: Q contact material: 6 AMPS @ 120 V AC or 28 V DC; 3 AMPS @ 250 V AC. See page A-59 for additional ratings.

ELECTRICAL LIFE: 50,000 make-and-break cycles at full load.

CONTACT RESISTANCE: Below 20 mΩ typ. initial @ 2-4 V DC, 100 mA, for both silver and gold plated contacts.

INSULATION RESISTANCE: $10^9\Omega$ min.

DIELECTRIC STRENGTH: 1,000 Vrms min. @ sea level.

OPERATING TEMPERATURE: –30°C to 65°C

SOLDERABILITY: Per MIL-STD-202F method 208D, or EIA RS-186E method 9 (1 hour steam aging).

CAP INSTALLATION FORCE: 10 lbs. maximum permissible.

**NOTE:** Any models supplied with P, R, S, Q, B or G contact material are RoHS compliant.

**NOTE:** Specifications and materials listed above are for switches with standard options. For information on specific and custom switches, consult Customer Service Center.

## Materials

CASE: Glass filled nylon 6/6 or diallyl phthalate (DAP), flame retardant (UL 94V-0).

PLUNGER: S, S1, S2 Options: Glass filled nylon or glass filled polyester (PBT) (UL 94V-0). L, L1 Options: Brass, nickel plated.

CAP & FRAME: Nylon, black standard.

BUSHING: Brass or zinc, nickel plated.

HOUSING: Stainless steel.

SWITCH SUPPORT: Brass or steel, matte-tin plated.

END CONTACTS: Q contact material: Coin silver, silver plated. See page A-59 for additional contact materials.

CENTER CONTACT & ALL TERMINALS: Q contact material: Copper alloy, silver plated. See page A-59 for additional contact materials.

TERMINAL SEAL: Epoxy. Refer to soldering and cleaning in Technical Data Chapter.

HARDWARE: Nut & Locking Ring: Brass, nickel plated; Lockwasher: Steel, nickel plated.

## Build-A-Switch

To order, simply select desired option from each category and place in the appropriate box. Available options are shown and described on pages A-53 thru A-61. For additional options not shown in catalog, consult Customer Service Center. All models have epoxy terminal seal and are compatible with all "bottom-wash" PCB cleaning methods.

**Switch Function**
- **8161** SPDT On-On
- **8168** SPDT On-Mom.
- **8261** DPDT On-On

**Actuator or Plunger**
- **S** .710" high plunger with .375" dia. cap
- **J80** Snap-in
- **J81** Snap-in with frame
- **J82** Snap-in with frame for LED
- **J86** Snap-in with frame & LED
- **L** .740" high plunger with .395" dia. cap
- **L1** .740" high plunger with .590" dia. cap
- **S1** .615" high plunger with .200" dia. cap
- **S2** .710" high plunger with .310" dia. cap

**Bushing**
- **H** .300" high, flat, hi torque
- **H9** .300" high, flat, hi torque
- **NONE** No bushing choice required
- **Y3** 7.6mm, keyway

**Terminations**
- **A** Right angle, PC thru-hole
- **AV2** Vertical right angle, PC thru-hole
- **C** PC Thru-hole
- **Z** Solder lug
- **A3** Right angle, snap-in, PC thru-hole
- **AV3** Vertical right angle, snap-in, PC thru-hole
- **V3** .460" high, V-bracket
- **V4** .630" high, V-bracket
- **V6** .460" high, V-bracket
- **V21** .555" high, snap-in V-bracket
- **V31** .460" high, snap-in V-bracket
- **W** .750" long, wire wrap
- **Z3** Quick connect

**Contact Material**
- **B** Gold
- **P** Gold, matte-tin
- **Q** Silver
- **S** Silver, matte-tin
- **G** Gold over silver
- **R** Gold over silver, matte-tin

**Seal**
- **E** Epoxy
- **I** Epoxy potted base

**Cap Color**
- **2** Black
- **1** White
- **3** Red
- **4** Orange
- **5** Yellow
- **9** Gray

**Frame Color**
- **2** Black

**LED Color**
- **3** Red
- **NONE** Models without LED

# 8060 Series
# Alternate Action and Momentary Pushbutton Switches

## SWITCH FUNCTION

| NO. POLES | MODEL NO. | SWITCH FUNCTION POS. 1 | SWITCH FUNCTION POS. 2 | CONNECTED TERMINALS POS. 1 | CONNECTED TERMINALS POS. 2 | SCHEMATIC |
|---|---|---|---|---|---|---|
| | | C&K marking this side | | C&K marking this side | | |
| SP | 8161 | ON | ON | 2-3 | 2-1 | SPDT |
| | 8168 | ON | MOM. | 2-3 | 2-1 | |
| DP | 8261 | ON | ON | 2-3,5-6 | 2-1,5-4 | DPDT |

### SPDT

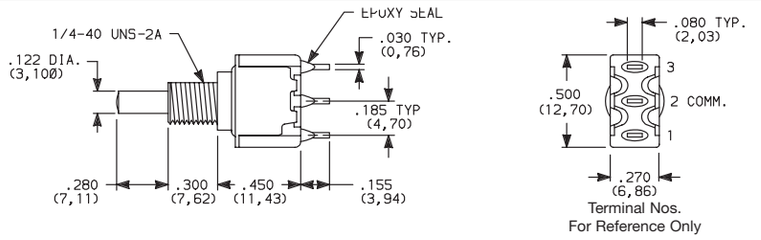


Part number shown: 8161SHZQE

### DPDT

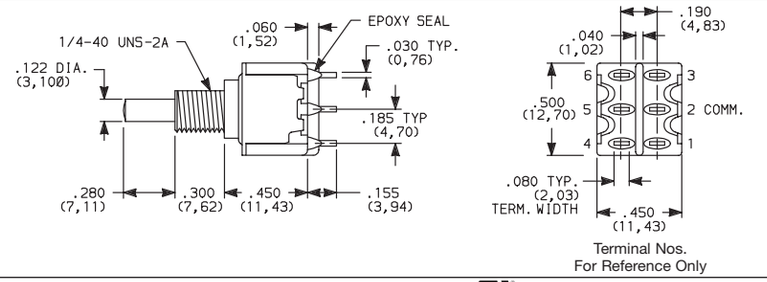


Part number shown: 8261SHZQE

MOM. = Momentary

All models c UL us with all options when ordered with G or Q contact material.

## ACTUATOR—SNAP-IN FRONT MOUNT

CAP COLOR

ACTUATOR OR PLUNGER

| OPTION CODE | CAP COLOR |
|---|---|
| 2 | BLACK |
| 1 | WHITE |
| 3 | RED |
| 4 | ORANGE |
| 5 | YELLOW |
| 9 | GRAY |

Cap Finish: matte.
Other colors available, consult Customer Service Center.

Available with C, W, Z or Z3 terminations.

**NOTE:** Caps & frames available separately, see pages A-60 and A-61.

### J80 SNAP-IN

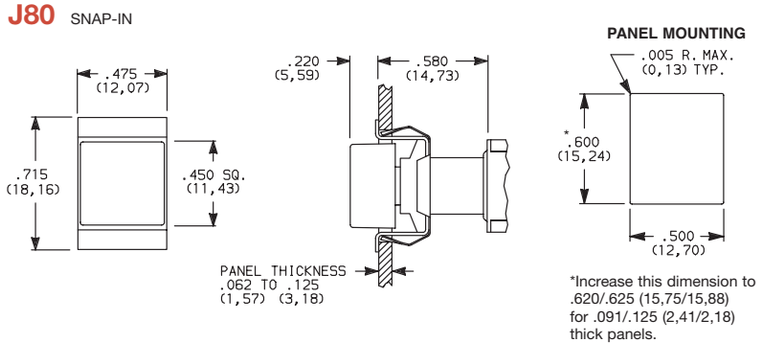

### J81 SNAP-IN WITH BLACK FRAME

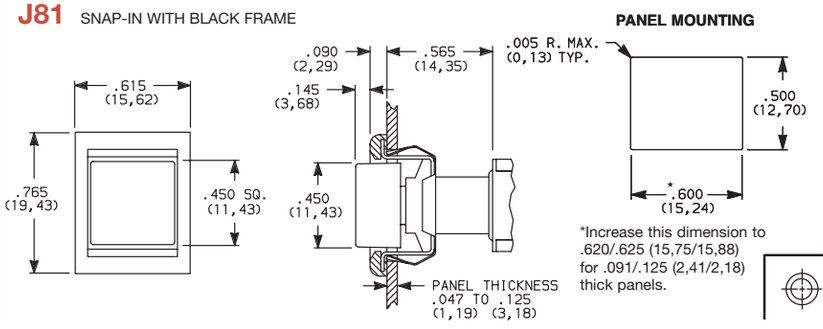

Third Angle Projection

*Dimensions are shown: Inches (mm)*
*Specifications and dimensions subject to change*

# 8060 Series
# Alternate Action and Momentary Pushbutton Switches

## ACTUATOR—SNAP-IN FRONT MOUNT

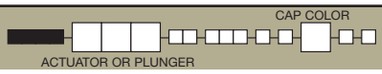


### J82 SNAP-IN WITH BLACK FRAME FOR LED

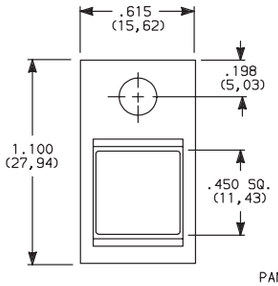


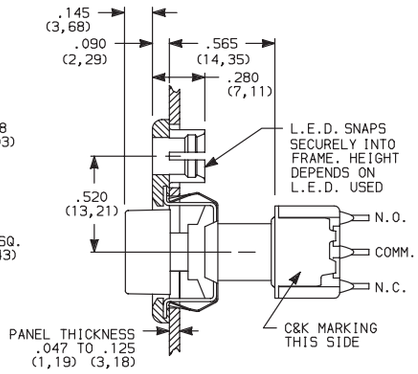


**PANEL MOUNTING**

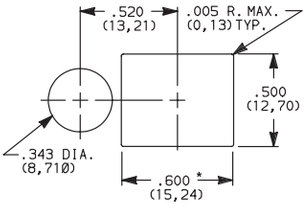


* Increase this dimension to .620/.625 (15,75/15,88) for .091/.125 (2,31/3,18) thick panels.

Available with C, W, Z or Z3 terminations.

**LED not included.**
For LED information, see page A-61.

**NOTE:** Caps & frames available separately, see pages A-60 and A-61.

Other colors available, consult Customer Service Center.

| OPTION CODE | CAP COLOR |
|---|---|
| 2 | BLACK |
| 1 | WHITE |
| 3 | RED |
| 4 | ORANGE |
| 5 | YELLOW |
| 9 | GRAY |

## ACTUATOR—SNAP-IN FRONT MOUNT

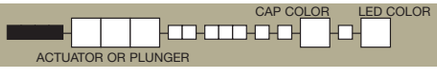


### J86 SNAP-IN WITH BLACK FRAME AND LED

8161J86ZQE223
**SPDT**

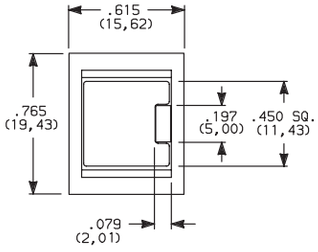


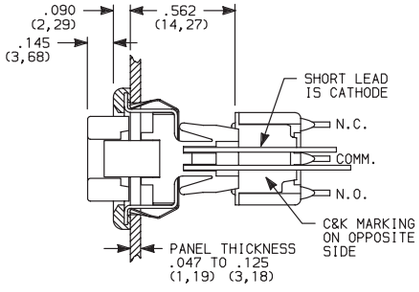


**PANEL MOUNTING**

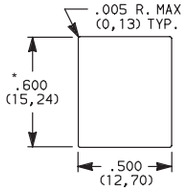


* Increase this dimension to .620/.625 (15,75/15,88) for .091/.125 (2,31/3,18) thick panels.

Available with C, W, Z or Z3 terminations and SPDT models only.

**NOTE:** Caps & frames available separately, see pages A-60 and A-61.

Other colors available, consult Customer Service Center.

| OPTION CODE | CAP COLOR |
|---|---|
| 2 | BLACK |
| 1 | WHITE |
| 3 | RED |
| 4 | ORANGE |
| 5 | YELLOW |
| 9 | GRAY |

| OPTION CODE | LED COLOR |
|---|---|
| 3 | RED |

For LED information, see page A-61.

Third Angle Projection

*Dimensions are shown: Inches (mm)*
*Specifications and dimensions subject to change*

## PLUNGER

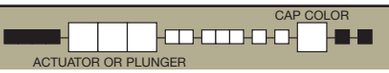


**S** PLUNGER WITH CAP P/N 7527

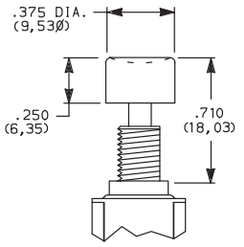


**S1** PLUNGER WITH CAP P/N 7089

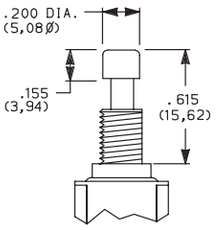


**S2** PLUNGER WITH CAP P/N 8018

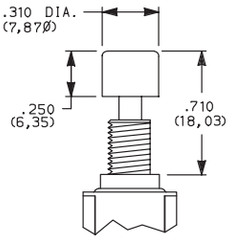


**S, S1, S2 plunger dimensions.**

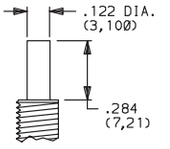


Plunger material: Glass filled nylon or glass filled polyester (UL 94V-0).

**L** PLUNGER WITH CAP P/N 8941

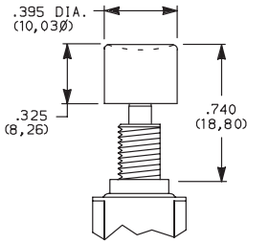


**L1** PLUNGER WITH CAP P/N 8940

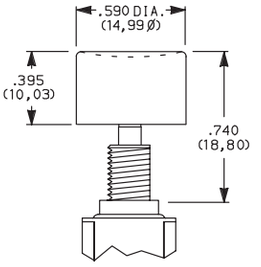


**L, L1 plunger dimensions.**

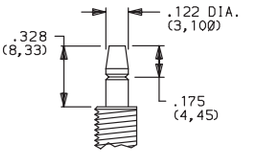


Plunger Material: Brass, chrome plated.

| OPTION CODE | CAP COLOR |
|---|---|
| 2 | BLACK |
| 1 | WHITE |
| 3 | RED |
| 4 | ORANGE |
| 5 | YELLOW |
| 9 | GRAY |

Cap Finish: gloss. Cap supplied not installed. Other colors available, consult Customer Service Center.

**NOTE:** When selecting plunger and cap option, bushing selection must also be made, see below.

## BUSHING

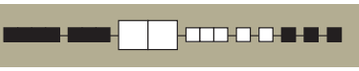

**H** .300" HIGH THREADED, FLAT

**H9** .300" HIGH UNTHREADED, FLAT

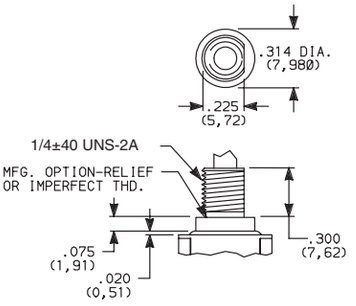


H bushing standard with C, W, Z or Z3 terminations.
H9 bushing standard with A, A3, AV2, AV3, or V3-V31 terminations.

**Withstands 12 in./lbs. of torque with no distortion.**

**NONE** NO BUSHING CHOICE REQUIRED (JXX ACTUATORS)

**Y3** 7.6mm THREADED, KEYWAY

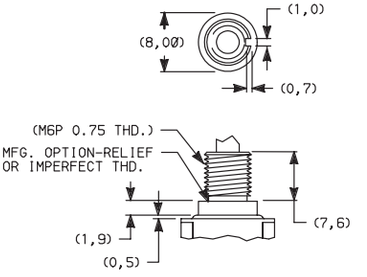


**Withstands 12 in./lbs. of torque with no distortion.**

**NOTE:** When selecting bushing option, plunger selection must also be made, see above. No bushing option choice required when any JXX actuator option is selected.

**PANEL MOUNTING**

1/4 IN. BUSHING

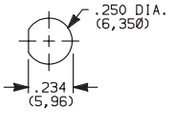


Without Locking Ring

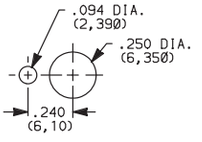


With Standard Locking Ring

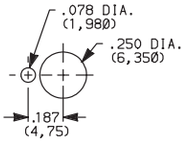


With Small Locking Ring

METRIC BUSHING

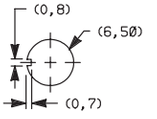


Without Locking Ring

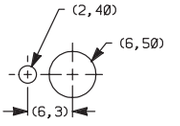


With Locking Ring

**NOTE.** Two mounting nuts, locking ring and lockwasher supplied standard with threaded bushings. Optional mounting nut and locking ring styles and finishes available, see section "Technical Data and Additional Hardware".

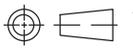

Third Angle Projection

*Dimensions are shown: Inches (mm)*
*Specifications and dimensions subject to change*

# 8060 Series
# Alternate Action and Momentary Pushbutton Switches

## TERMINATIONS

### C PC THRU-HOLE

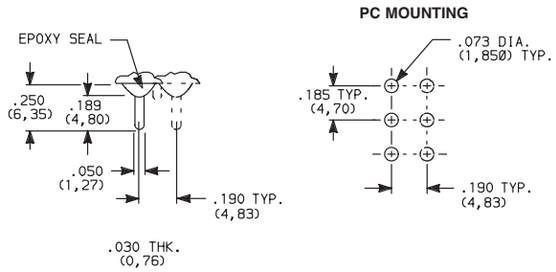


**SPDT and DPDT**

### Z SOLDER LUG

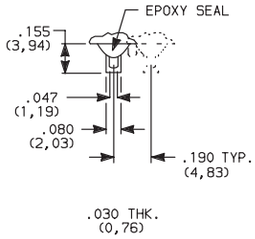


**SPDT and DPDT**

Not available with P, S or R contact material.

### Z3 QUICK CONNECT

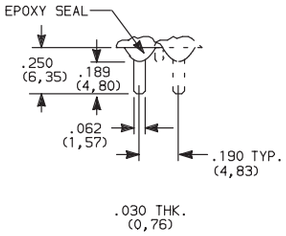


**SPDT and DPDT**

Not available with P, S or R contact material.
Mating quick connector available;
order part number 530100000, page A-61.

### W WIRE WRAP

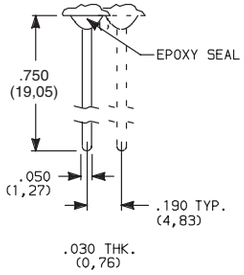


**SPDT and DPDT**

### A RIGHT ANGLE, PC THRU-HOLE

8161SH9ABE2
**SPDT**

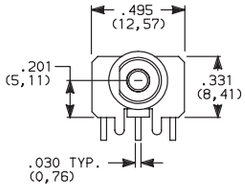


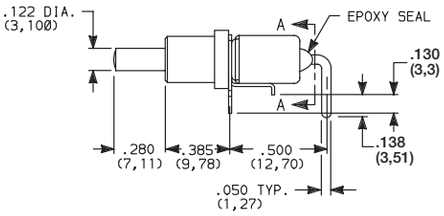


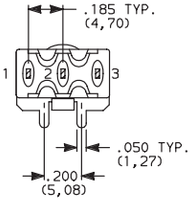


SECTION A-A

### A3 RIGHT ANGLE, SNAP-IN, PC THRU-HOLE

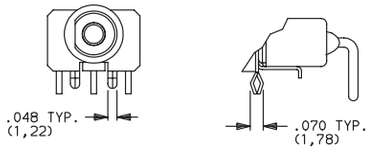


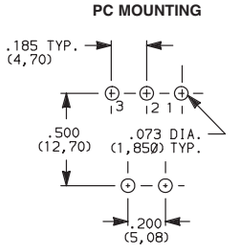


**NOTE:** PC pattern must clear switch support leg.

Not available with I seal.
Terminal bend radii and lead-in manufacturing option.

Third Angle Projection

*Dimensions are shown: Inches (mm)*
*Specifications and dimensions subject to change*

## TERMINATIONS

### A RIGHT ANGLE, PC THRU-HOLE

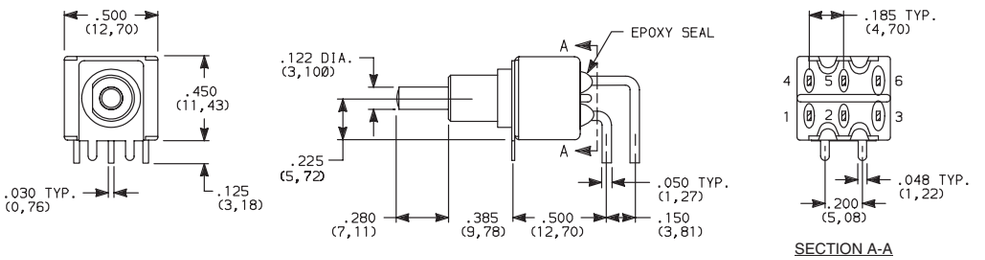

8261SH9ABE2
**DPDT**

### A3 RIGHT ANGLE, SNAP-IN, PC THRU-HOLE

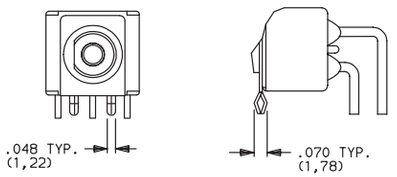


**PC MOUNTING**

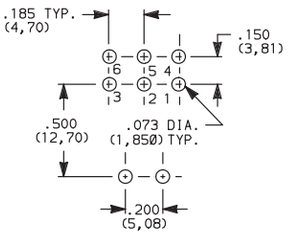


Not available with I seal.
Terminal bend radii and lead-in manufacturing option.

### AV2 VERTICAL RIGHT ANGLE, PC THRU-HOLE, .150" PITCH

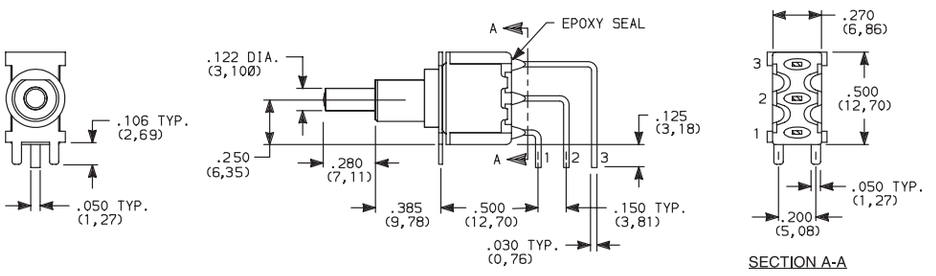

8161SH9AV2BE2
**SPDT**

### AV3 VERTICAL RIGHT ANGLE, SNAP-IN, PC THRU-HOLE, .150" PITCH

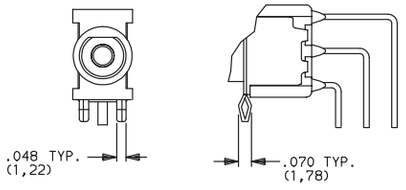


**PC MOUNTING**

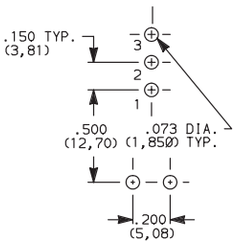


Not available with I seal.
Terminal bend radii and lead-in manufacturing option.

Third Angle Projection

*Dimensions are shown: Inches (mm)*
*Specifications and dimensions subject to change*

# 8060 Series
# Alternate Action and Momentary Pushbutton Switches

## TERMINATIONS

### AV2 VERTICAL RIGHT ANGLE, PC THRU-HOLE, .150" PITCH

8261SH9AV2BE2
**DPDT**

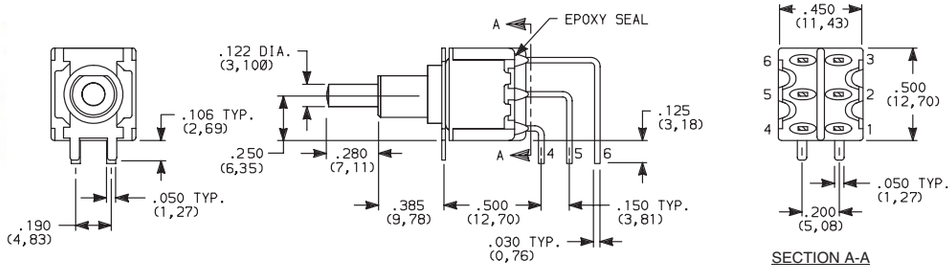


### AV3 VERTICAL RIGHT ANGLE, SNAP-IN, PC THRU-HOLE, .150" PITCH

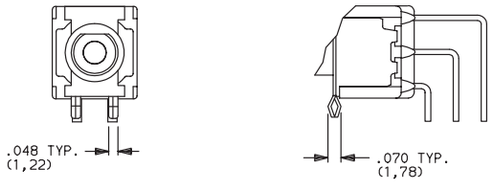


PC MOUNTING

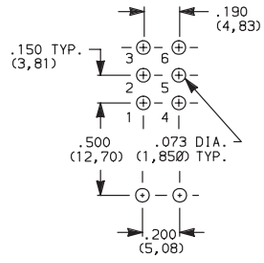


Not available with I seal.
Terminal bend radii and lead-in manufacturing option.

### V6 VERTICAL MOUNT, V-BRACKET
### V21 VERTICAL MOUNT, V-BRACKET, SNAP-IN

8161SH9__BE2
**SPDT**

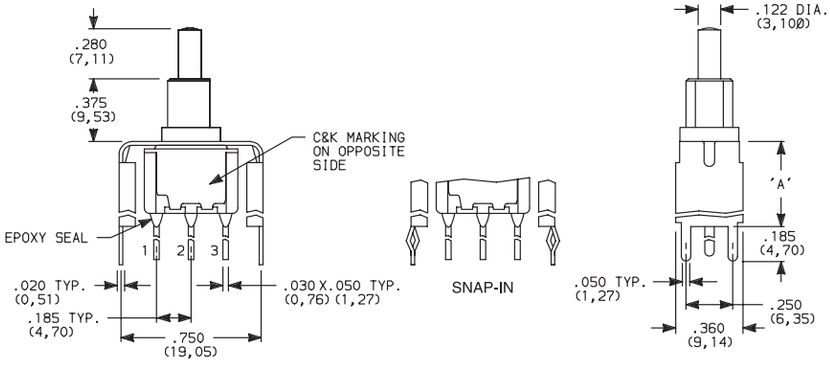


PC MOUNTING

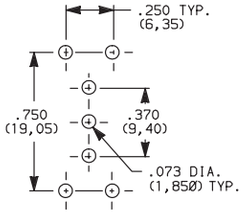


| OPTION CODE | DIM 'A' |
|---|---|
| V21 | .555 (14,10) |
| V6 | .460 (11,68) |

Not available with I seal.

### V6 VERTICAL MOUNT, V-BRACKET
### V21 VERTICAL MOUNT, V-BRACKET, SNAP-IN

8261SH9__BE2
**DPDT**

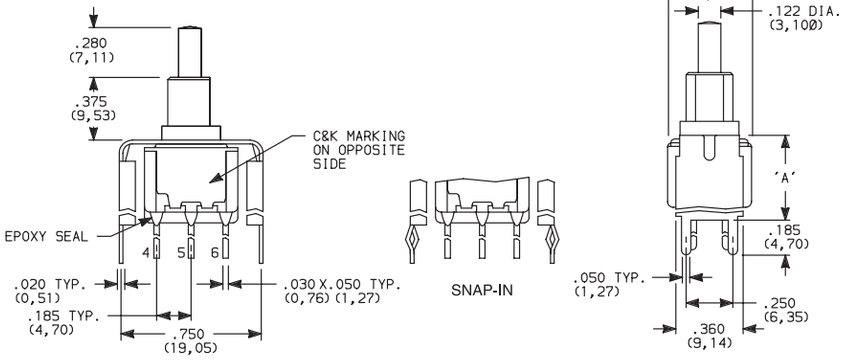


PC MOUNTING

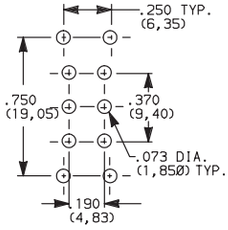


| OPTION CODE | DIM 'A' |
|---|---|
| V21 | .555 (14,10) |
| V6 | .460 (11,68) |

Not available with I seal.

Third Angle Projection

*Dimensions are shown: Inches (mm)*
*Specifications and dimensions subject to change*

## TERMINATIONS

**V3, V4** VERTICAL MOUNT, V-BRACKET

**V31** VERTICAL MOUNT, V-BRACKET, SNAP-IN

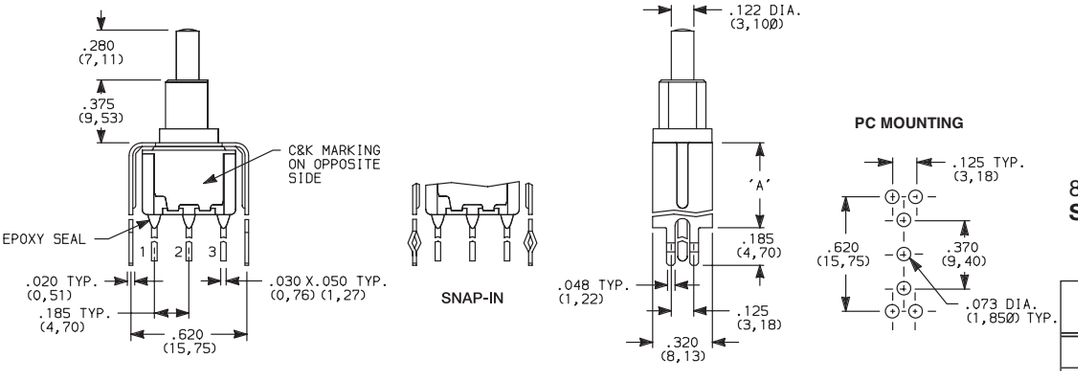

8161SH9__BE2
**SPDT**

| OPTION CODE | DIM 'A' |
|---|---|
| V3, V31 | .460 (11,68) |
| V4 | .630 (16,00) |

Not available with I seal.

**V3, V4** VERTICAL MOUNT, V-BRACKET

**V31** VERTICAL MOUNT, V-BRACKET, SNAP-IN

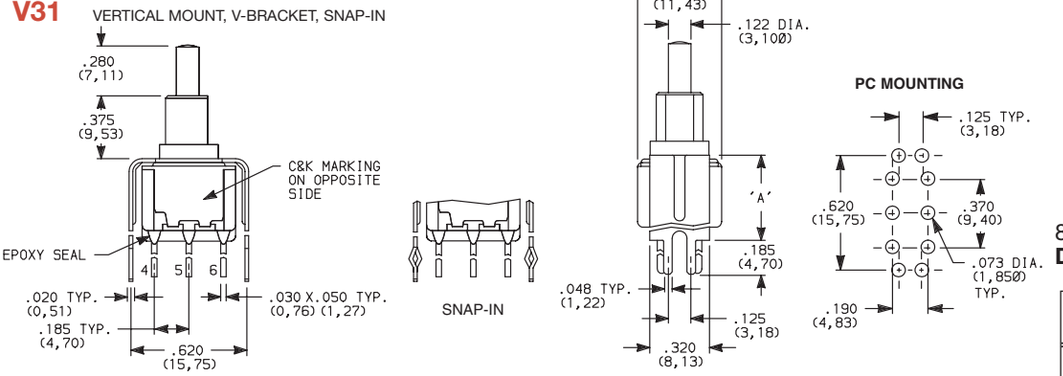

8261SH9__BE2
**DPDT**

| OPTION CODE | DIM 'A' |
|---|---|
| V3, V31 | .460 (11,68) |
| V4 | .630 (16,00) |

Not available with I seal.

## CONTACT MATERIAL

| OPTION CODE | CONTACT MATERIAL | TERMINAL PLATING | RATINGS | |
|---|---|---|---|---|
| B | GOLD [1] | GOLD [1] | LOW LEVEL/DRY CIRCUIT | 0.4 VA MAX. @ 20 V AC OR DC MAX. |
| P | | MATTE-TIN [6] | | |
| Q | SILVER [4,5] | SILVER [5] | POWER | 6 AMPS @ 120 V AC OR 28 V DC; 3 AMPS @ 250 V AC. |
| S | | MATTE-TIN [6] | | |
| G | GOLD OVER SILVER [2,3] | GOLD [3] | LOW LEVEL/DRY CIRCUIT OR POWER | 0.4 VA MAX @ 20 V AC OR DC MAX. OR 6 AMPS @ 120 V AC OR 28 V DC; 3 AMPS @ 250 V AC. |
| R | | MATTE-TIN [6] | | |

* Note: See Technical Data section of this catalog for RoHS compliant and compatible definitions and specifications.

[1] CONTACTS & TERMINALS: Copper alloy, with gold plate over nickel plate.

[2] END CONTACTS: Coin silver, with gold plate over nickel plate.

[3] CENTER CONTACTS & ALL TERMINALS: Copper alloy, with gold plate over nickel plate.

[4] END CONTACTS: Coin silver, silver plated.

[5] CENTER CONTACT & ALL TERMINALS: Copper alloy, silver plated.

[6] TERMINALS: Copper alloy, with matte-tin over nickel plate.

**NOTE:** Any models supplied with P, S, R,Q, B or G contact material are RoHS compliant.

All models c UL us with all options when ordered with S, R, G, or Q contact material.

B contact material standard with all terminations except C, Z & Z3.

Q contact material standard with C, Z & Z3 terminations.

P, S & R contact materials not available with Z & Z3 terminations.

Third Angle Projection

*Dimensions are shown: Inches (mm)*
*Specifications and dimensions subject to change*

# 8060 Series
# Alternate Action and Momentary Pushbutton Switches

## SEAL

**E** EPOXY SEAL

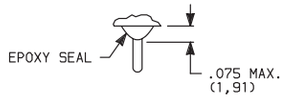


**I** EPOXY POTTED BASE

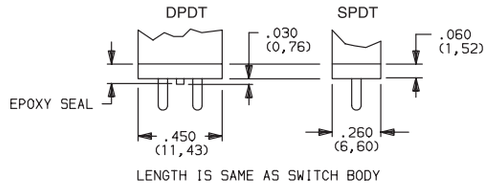


**NOTE:** Available with C, W, Z, Z3 terminations only.

## AVAILABLE HARDWARE

**Cap**

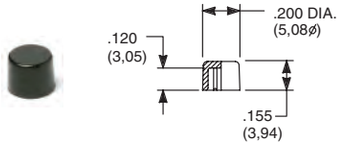


**PART NO.**

| | |
|---|---|
| 708901000 | WHITE |
| 708902000 | BLACK |
| 708903000 | RED |
| 708904000 | ORANGE |
| 708905000 | YELLOW |
| 708909000 | GRAY |

Material: Nylon
Finish: Gloss

**Cap**

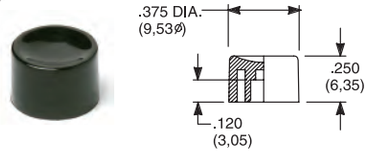


**PART NO.**

| | |
|---|---|
| 752701000 | WHITE |
| 752702000 | BLACK |
| 752703000 | RED |
| 752704000 | ORANGE |
| 752705000 | YELLOW |
| 752709000 | GRAY |

Material: Nylon
Finish: Gloss

**Cap**

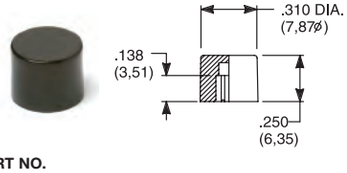


**PART NO.**

| | |
|---|---|
| 801801000 | WHITE |
| 801802000 | BLACK |
| 801803000 | RED |
| 801804000 | ORANGE |
| 801805000 | YELLOW |
| 801809000 | GRAY |

Material: Nylon
Finish: Gloss

**Cap, Snap-fitting plunger**

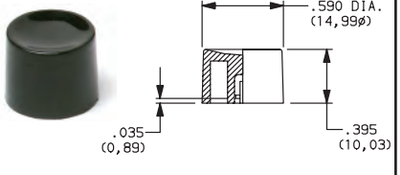


**PART NO.**

| | |
|---|---|
| 452D01000 | WHITE |
| 452D02000 | BLACK |
| 452D03000 | RED |
| 452D04000 | ORANGE |
| 452D05000 | YELLOW |
| 452D09000 | GRAY |

Material: Nylon
Finish: Gloss

**Cap, Snap-fitting plunger**

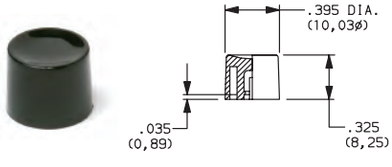


**PART NO.**

| | |
|---|---|
| 894101000 | WHITE |
| 894102000 | BLACK |
| 894103000 | RED |
| 894104000 | ORANGE |
| 894105000 | YELLOW |
| 894109000 | GRAY |

Material: Nylon
Finish: Gloss

**Cap, J80, J81 & J82 options only**

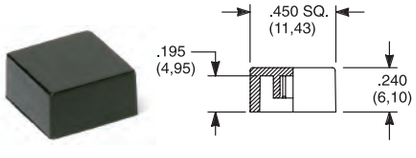


**PART NO.**

| | |
|---|---|
| 484601000 | WHITE |
| 484602000 | BLACK |
| 484603000 | RED |
| 484604000 | ORANGE |
| 484605000 | YELLOW |
| 484609000 | GRAY |

Material: Nylon
Finish: Gloss

**PART NO.**

| | |
|---|---|
| 798201000 | WHITE |
| 798202263 | BLACK |
| 798203000 | RED |
| 798204000 | ORANGE |
| 798205000 | YELLOW |
| 798209000 | GRAY |

Material: Nylon
Finish: Matte

**Cap, J86 & J96 options only**

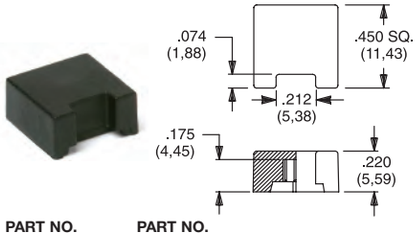


**PART NO.**

| | |
|---|---|
| 459701000 | WHITE |
| 459702000 | BLACK |
| 459703000 | RED |
| 459704000 | ORANGE |
| 459705000 | YELLOW |
| 459709000 | GRAY |

Material: Nylon
Finish: Gloss

**PART NO.**

| | |
|---|---|
| 476801000 | WHITE |
| 476802000 | BLACK |
| 476803000 | RED |
| 476804000 | ORANGE |
| 476805000 | YELLOW |
| 476809000 | GRAY |

Material: Nylon
Finish: Matte

**Frame**

**PART NO.**

615602263 BLACK

Material: Nylon
Finish: Matte

**Frame**

**PART NO.**

613302263 BLACK

Material: Nylon
Finish: Matte

**NOTE:** Additional nuts, locking rings and lockwashers available separately, see section "Technical Data and Additional Hardware".
Other cap & frame colors available, consult Customer Service Center.

Third Angle Projection

*Dimensions are shown: Inches (mm)*
*Specifications and dimensions subject to change*

## AVAILABLE HARDWARE

**Fits Z3 Termination female connector**

**PART NO.**
**530100000**
Available in loose pieces.

Frames snap into panel opening and are independent from switch mounting. Accurate positioning of the PC mounted switch relative to the panel opening is necessary to provide proper clearance between actuator and frame. Available in two basic styles and four panel thicknesses .047-.125 in. Material: Nylon. Finish: Matte.

**TYPICAL APPLICATION**

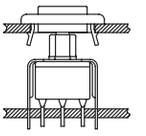

| .047" (1,19) PANEL THK. | .062" (1,57) PANEL THK. | .090" (2,29) PANEL THK. | .125" (3,18) PANEL THK. |
|---|---|---|---|
| **PART NO.** | **PART NO.** | **PART NO.** | **PART NO.** |
| **432502263** | **432602263** | **432702263** | **432802263** BLACK |

**PANEL MOUNTING**

For part numbers 4325xxxxx, 4326xxxxx

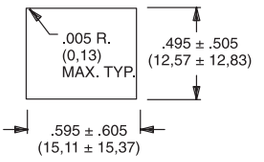


For part numbers 4327xxxxx, 4328xxxxx

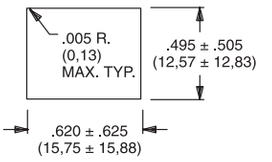


**Panel Inserts**

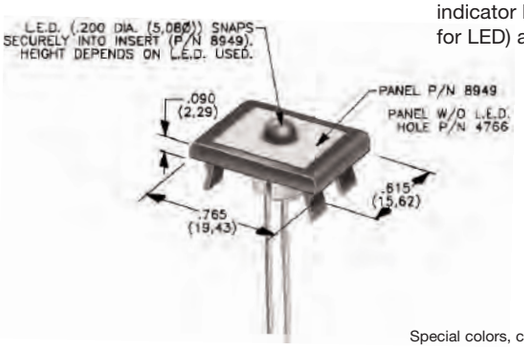


Above frames (part nos. 432XXXXXX) are also available with insert which accepts LED for indicator light assembly. Order insert separately from frame. Blank insert panel (without hole for LED) also available. **LED not included.**

| PANEL INSERT WITH HOLE FOR LED | BLANK PANEL INSERT WITHOUT HOLE FOR LED |
|---|---|
| **PART NO.** | **PART NO.** |
| **894902000** | **476602000** BLACK |

Special colors, custom markings available, consult Customer Service Center.

## LED INFORMATION

SWITCHES WITH LED SUPPLIED: J86 OPTION:
Rectangular LEDs are supplied on 8060 Series pushbutton switches with J86 option. These LEDs are factory installed and are not replaceable. The following specifications apply:

| OPTION CODE | COLOR | TYP. INTENSITY | TYP. FORWARD VOLTAGE | TYP. FORWARD CURRENT | MAX RATINGS AT 25°C AMBIENT TEMPERATURE | | |
|---|---|---|---|---|---|---|---|
| | | | | | FORWARD VOLTAGE | CONTINUOUS FORWARD CURRENT | POWER DISSIPATION |
| 6 | Green | 1.0 mcd | 2.1 V | 20 mA | 2.5 V | 50 mA | 125 mW |
| 3 | Red* | 0.5 mcd | | 10 mA | | 30 mA | 75 mW |
| 5 | Yellow | 4.0 mcd | | 20 mA | | 50 mA | 125 mW |

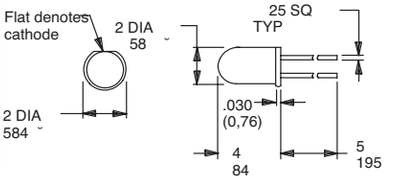


Suggested LED for J82 & J84 options
Dimensions for reference only

**Process Information:** Soldering to LED leads must be completed within 5 seconds at 500°F (260°C) maximum.
**Caution:** Circuit elements must limit forward current of LED to 50mA max. continuous.
* Extra-bright red LED available (typ. intensity 4.5 mcd), consult Customer Service Center.
LEDs are not supplied with J82 & J84 options. LED snaps into switch frame surrounding actuator and is wired externally.

Third Angle Projection

*Dimensions are shown: Inches (mm)*
*Specifications and dimensions subject to change*

# 8500 Series
# Subminiature Pushbutton Switches

## Features/Benefits

- *Pre-travel or over-travel models available*
- *Ratings up to 3 AMPS*
- *Reliable contact design*
- *RoHS compliant*

## Typical Applications

- *Detection*
- *Telecommunications and networking equipment*
- *Computers and peripherals*

Models Available

## Specifications

CONTACT RATING: Q contact material (853X Models): 1 AMP @ 120 V AC or 28 V DC; (855X Models): 3 AMPS @ 120 V AC or 28 V DC. See page A-65 for additional ratings.

ELECTRICAL LIFE:
853X MODELS: 250,000 actuations at full load.
855X MODELS: 10,000 actuations at full load.

CONTACT RESISTANCE: Below 30 mΩ typ. initial @ 2-4 V DC, 100 mA, for both silver and gold plated contacts.

INSULATION RESISTANCE: $10^9\Omega$ min.

DIELECTRIC STRENGTH: 1,000 Vrms min. @ sea level.

OPERATING TEMPERATURE: –30°C to 65°C.

TORQUE SPECS: T, T1 15/32" bushings - 50 in. lbs max. All other 1/4 -40 bushing types 12 in. lbs max.

## Materials

CASE: Glass filled phenolic or diallyl phthalate (DAP) (UL 94V-0).

PLUNGER: Phenolic or glass filled polyester, black standard(UL94V-0).

CAP & FRAME: Nylon, black, standard.

BUSHING: Brass, nickel plated.

CONTACTS: Q contact material: Coin silver, silver plated. See page A-65 for additional contact materials.

TERMINALS: Q contact material: Copper alloy, silver plated. See page A-65 for additional contact materials.

TERMINAL SEAL: Epoxy.

HARDWARE: Nut: Brass, nickel plated; Lockwasher: Steel, bright nickel plated.

**NOTE:** Any models supplied with Q, B or G contact material are RoHS compliant.

**NOTE:** Specifications and materials listed above are for switches with standard options. For information on specific and custom switches, consult Customer Service Center.

## Build-A-Switch

To order, simply select desired option from each category and place in the appropriate box. Available options are shown and described on pages A-63 thru A-66. For additional options not shown in catalog, consult Customer Service Center. All models have epoxy terminal seal and are compatible with all "bottom-wash" PCB cleaning methods.

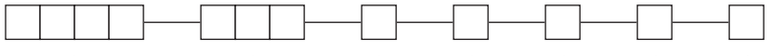

**Switch Function**
- **8531** SPST Off-Mom. 1 Amp
- **8532** SPST Off-Mom. 1 Amp
- **8533** SPST On-Mom. 1 Amp
- **8534** SPST On-Mom. 1 Amp
- **8551** SPST Off-Mom. 3 Amps
- **8552** SPST Off-Mom. 3 Amps

**Actuator or Plunger**
- **M** .150" high
- **J81** Snap-in with frame
- **J82** Snap-in with frame for LED
- **S** .210" high
- **T** 15/32 bushing
- **T1** 15/32 bushing with frame (8532 and 8534 only)

**Terminations**
- **Z** Solder lug
- **AV*** Right angle, PC thru-hole
- **C** PC Thru-hole

**Contact Material**
- **Q** Silver
- **B** Gold
- **G** Gold over silver

**Seal**
- **E** Epoxy
- **D** No epoxy seal

**Cap or Plunger Color**
- **2** Black
- **1** White
- **3** Red
- **9** Gray

**Frame Color**
- **2** Black
- **NONE** Models without frame

* Available with M or S plunger models, and B contact material only.

*Dimensions are shown: Inches (mm)*
*Specifications and dimensions subject to change*

## SWITCH FUNCTION

| NO. POLES | MODEL NO. | RATING | SWITCH FUNCTION POS. 1 | SWITCH FUNCTION POS. 2 | TOTAL TRAVEL | ACTUATION FORCE | SCHEMATIC |
|---|---|---|---|---|---|---|---|
| SP | 8531 | 1 AMP | OFF | MOM. | .095 (2,41) TYP. with overtravel .042 (1,07) TYP. | 7.7 oz (220g) TYP. | N.O. with overtravel |
| | 8551 | 3 AMPS | | | | | |

### SPST

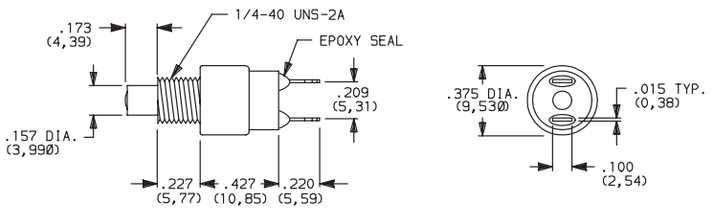


Part number shown: 8531MZQE2

| NO. POLES | MODEL NO. | RATING | SWITCH FUNCTION POS. 1 | SWITCH FUNCTION POS. 2 | TOTAL TRAVEL | ACTUATION FORCE | SCHEMATIC |
|---|---|---|---|---|---|---|---|
| SP | 8532 | 1 AMP | OFF | MOM. | .050 (1,27) TYP. | 6 oz (170g) TYP. | N.O. |
| | 8552 | 3 AMPS | | | | | |

### SPST

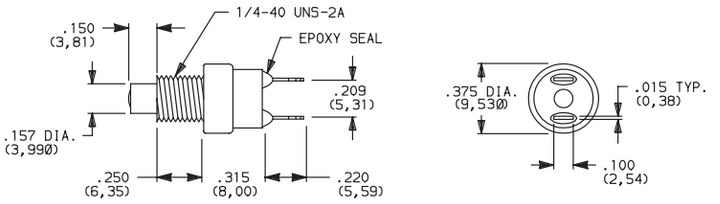


Part number shown: 8532MZQE2

| NO. POLES | MODEL NO. | RATING | SWITCH FUNCTION POS. 1 | SWITCH FUNCTION POS. 2 | TOTAL TRAVEL | ACTUATION FORCE | SCHEMATIC |
|---|---|---|---|---|---|---|---|
| SP | 8533 | 1 AMP | ON | MOM. | .080 (2,03) TYP. with pretravel .057 (1,45) TYP. | 11.5 oz (456 g) TYP. | N.C. with pretravel |
| | 8534 | 1 AMP | ON | MOM. | .032 (0,81) TYP. with overtravel .028 (0,71) TYP. | 10.3 oz (282g) TYP. | N.C. with overtravel |

### SPST

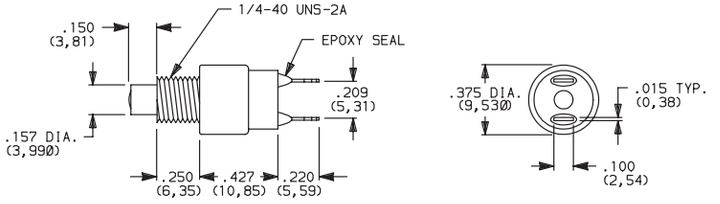


Part number shown: 8533MZQE2

MOM. = Momentary

All models with all options when ordered with G or Q contact material.

Third Angle Projection

*Dimensions are shown: Inches (mm)*
*Specifications and dimensions subject to change*

# 8500 Series
# Subminiature Pushbutton Switches

## PLUNGER

### M .150" HIGH PLUNGER

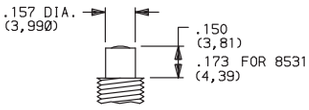


### S .210" HIGH PLUNGER

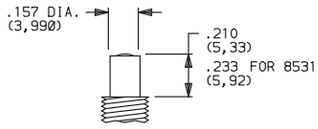


**PANEL MOUNTING**

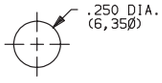


| OPTION CODE | PLUNGER COLOR |
|---|---|
| 2 | BLACK |
| 3 | RED |

**NOTE:** One mounting nut and lockwasher supplied with all actuators (except T actuator: two nuts supplied).

## ACTUATOR

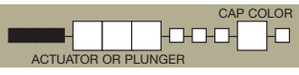


### T 15/32 BUSHING

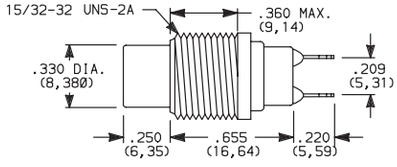


**NOTE:** No frame color choice required.

### T1 15/32 BUSHING WITH FRAME

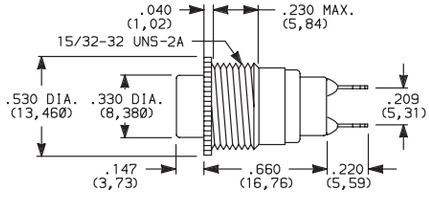


**NOTE:** No frame color choice required.
Available with 8532 and 8534 models only.

**PANEL MOUNTING**

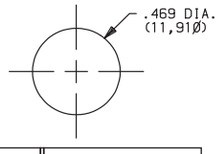


| OPTION CODE | CAP COLOR |
|---|---|
| 2 | BLACK |
| 1 | WHITE |
| 3 | RED |
| 9 | GRAY |

Cap Finish: gloss. Other colors available, consult Customer Service Center.

One mounting nut and lockwasher supplied with all actuators (except T actuator: two nuts supplied).

**NOTE:** Caps available for plunger options, see page A-65.

## ACTUATOR—SNAP-IN FRONT MOUNT

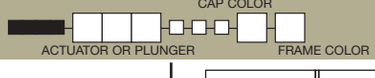


### J81 SNAP-IN WITH FRAME

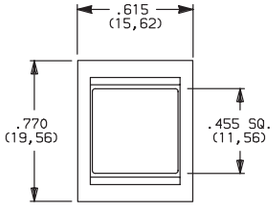


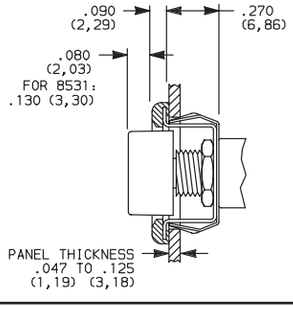


| OPTION CODE | CAP AND FRAME COLOR |
|---|---|
| 2 | BLACK |

Cap and Frame Finish: matte.
Other colors available,
consult Customer Service Center.

One mounting nut and lockwasher supplied with all actuators.

**NOTE:** Caps & frames available separately, see pages A-65 and A-66.

**PANEL MOUNTING**

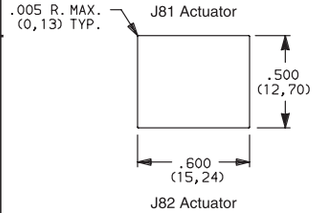


### J82 SNAP-IN WITH FRAME FOR LED

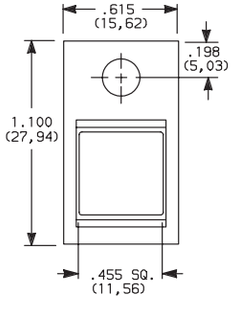


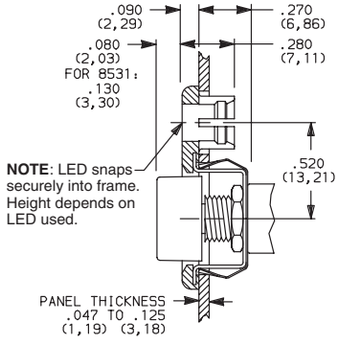


**NOTE**: LED snaps securely into frame. Height depends on LED used.

**LED not included.**
For LED information, see page A-66.

J82 Actuator

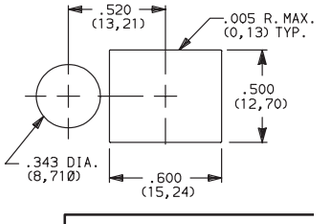


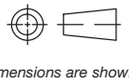
Third Angle Projection

*Dimensions are shown: Inches (mm)*
*Specifications and dimensions subject to change*

## TERMINATIONS

**Z** SOLDER LUG

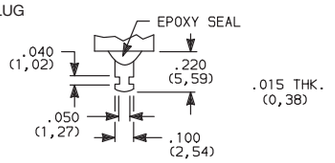


**C** PC THRU-HOLE

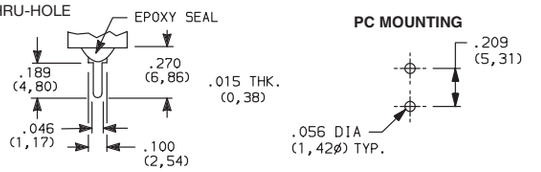


**AV** RIGHT ANGLE, PC THRU-HOLE

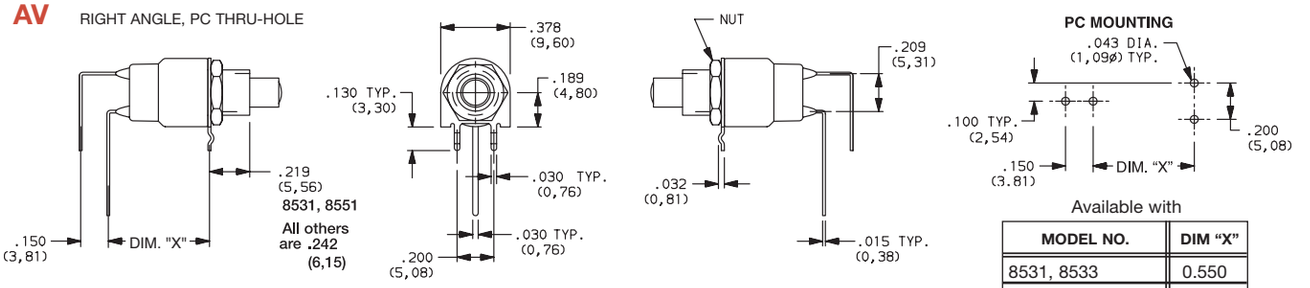


**NOTE:** Available with M or S plunger models, and B contact material only.

Available with

| MODEL NO. | DIM "X" |
|---|---|
| 8531, 8533 | 0.550 |
| 8532, 8534 | 0.438 |

## CONTACT MATERIAL

| OPTION CODE | RoHS COMPLIANT * | RoHS COMPATIBLE * | TERMINAL PLATING | CONTACT MATERIAL | RATINGS | |
|---|---|---|---|---|---|---|
| B | YES | YES | GOLD [1] | GOLD | LOW LEVEL/DRY CIRCUIT | 0.4 VA MAX. @ 20 V AC OR DC MAX. |
| Q | YES | YES | SILVER [4] | SILVER [5] | POWER | 853X MODELS: 1 AMP @ 120 V AC OR 28 V DC.<br>855X MODELS: 3 AMPS @ 120 V AC OR 28 V DC. |
| G | YES | YES | GOLD OVER SILVER [2] | GOLD [3] | LOW LEVEL/DRY CIRCUIT OR POWER | 0.4 V MAX @20 V AC OR DC MAX. OR 853X MODELS: 1 AMP @ 120 V AC OR 28 V DC. 855X MODELS: 3 AMPS @120 V AC OR 28 V DC. |

* Note: See Technical Data section of this catalog for RoHS compliant and compatible definitions and specifications.

[1] CONTACTS & TERMINALS: Copper alloy, with gold plate over nickel plate.
[2] CONTACTS: Coin silver, with gold plate over nickel plate.
[3] TERMINALS: Copper alloy, with gold plate over nickel plate.
[4] CONTACTS: Coin silver, silver plated.
[5] TERMINALS: Copper alloy, silver plated.

**NOTE:** Any models supplied with Q, B or G contact material are RoHS compliant.

All models ®ᴿᵁ with all options when ordered with G or Q contact material.

Q contact material standard with C, Z terminations.

8551 & 8552 available with Q contact material only.

## SEAL

**E** EPOXY SEAL

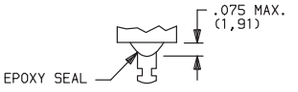


## REPLACEMENT HARDWARE

**Cap for 0.157" dia. plungers**

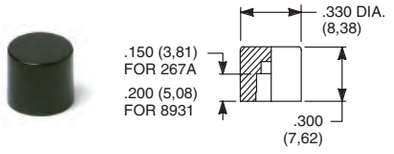


| PART NO. | | PART NO. | |
|---|---|---|---|
| 267A01000 | WHITE | 893101000 | WHITE |
| 267A02000 | BLACK | 893102000 | BLACK |
| 267A03000 | RED | 893103000 | RED |
| 267A09000 | GRAY | 893109000 | GRAY |
| 85X2T, 8534T models only | | 85X1T, 8532T1, 8533T, 8534T1 models only | |
| Material: Nylon<br>Finish: Gloss | | Material: Nylon<br>Finish: Gloss | |

**Cap, J80, J81 & J 82 options only**

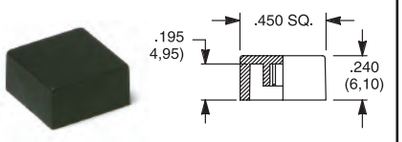


**PART NO.**

448901000 WHITE
448902000 BLACK
448903000 RED
448909000 GRAY

Material: Nylon
Finish: Gloss or matte

**Frame**

**PART NO.**

613302263 BLACK

Material: Nylon
Finish: Matte

Other colors available, consult Customer Service Center.

Third Angle Projection

*Dimensions are shown: Inches (mm)*
*Specifications and dimensions subject to change*

# 8500 Series
# Subminiature Pushbutton Switches

## AVAILABLE HARDWARE

**Frame**

**PART NO.**
615602263 BLACK

Material: Nylon
Finish: Matte

**NOTE:** Additional nuts, locking rings and lockwashers available separately, see section "Technical Data and Additional Hardware".
Other colors available, consult Customer Service Center.

Frames snap into panel opening and are independent from switch mounting. Accurate positioning of the PC mounted switch relative to the panel opening is necessary to provide proper clearance between actuator and frame. Available in two basic styles and four panel thicknesses .047-.125 in. Material: Nylon. Finish: Matte.

**TYPICAL APPLICATION**

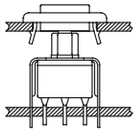

| .047" (1,19) PANEL THK. | .062" (1,57) PANEL THK. | .090" (2,29) PANEL THK. | .125" (3,18) PANEL THK. |
|---|---|---|---|
| **PART NO.** | **PART NO.** | **PART NO.** | **PART NO.** |
| 432502263 | 432602263 | 432702263 | 432802263 BLACK |

**PANEL MOUNTING**

For part numbers
4325xxxxx, 4326xxxxx

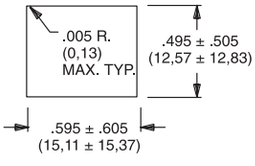


For part numbers
4327xxxxx, 4328xxxxx

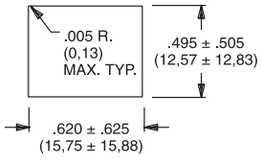


**Panel Inserts**

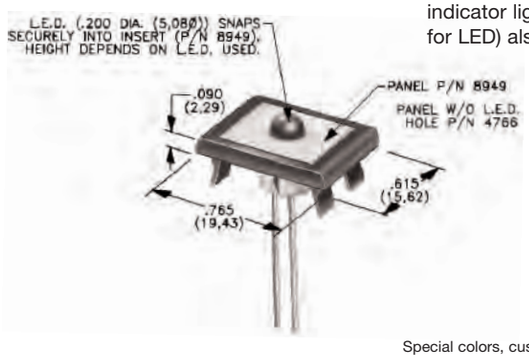


Above frames (part nos. 432XXXXXX) are also available with insert which accepts LED for indicator light assembly. Order insert separately from frame. Blank insert panel (without hole for LED) also available. **LED not included.**

| PANEL INSERT WITH HOLE FOR LED | BLANK PANEL INSERT WITHOUT HOLE FOR LED |
|---|---|
| **PART NO.** | **PART NO.** |
| 894902000 | 476602000 BLACK |

Special colors, custom markings available, consult Customer Service Center.

## LED INFORMATION

**Process Information:** Soldering to LED leads must be completed within 5 seconds at 500°F (260°C) maximum.
LEDs are not supplied with J82 option. LED snaps into switch frame surrounding actuator and is wired externally.

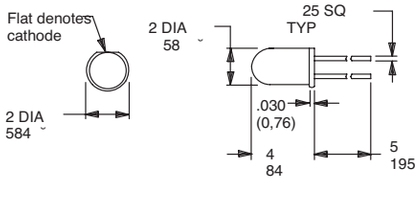


Suggested LED for J82 option
Dimensions for reference only

Third Angle Projection

*Dimensions are shown: Inches (mm)*
*Specifications and dimensions subject to change*

# KM Series
# Subminiature Pushbutton Switches

## *Features/Benefits*

- ***Reliable contact design***
- ***Available with pretravel and overtravel***
- ***RoHS compliant***

## *Typical Applications*

- ***Alarm systems***
- ***Computers***
- ***Detector switch application***

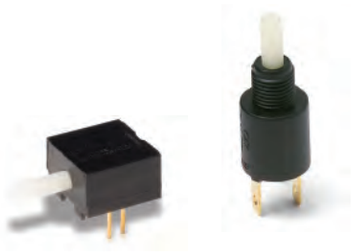

Models Available

## Specifications

CONTACT RATING: Q contact material (KM11, KM12 Models): 0.25 AMPS @ 125 V AC or DC (UL); (KM33 Model): 1 AMP @ 125 V AC or 28 V DC. See page A-69 for additional ratings.

ELECTRICAL LIFE: 10,000 actuations min. at full load.

CONTACT RESISTANCE: Below 30 mΩ typ. initial @ 2-4 V DC, 100 mA, for both silver and gold plated contacts.

INSULATION RESISTANCE: $10^9\Omega$ min.

DIELECTRIC STRENGTH: 1,000 Vrms min. @ sea level.

OPERATING TEMPERATURE: –30°C to 85°C.

CAP INSTALLATION FORCE: 10 lbs. max. permissible.

**NOTE:** Any models supplied with Q or B contact material are RoHS compliant.

**NOTE:** Specifications and materials listed above are for switches with standard options. For information on specific and custom switches, consult Customer Service Center.

## Materials

HOUSING & BUSHING: 6/6 nylon (UL94V-2), black.

ACTUATOR: 6/6 nylon (UL 94V-2), natural. Internal o-ring seal, available on KM11 & KM33 models.

MOVABLE CONTACT: B contact material: Bronze or copper, with gold plate over nickel plate. See page A-69 for additional contact materials.

STATIONARY CONTACTS & TERMINALS: B contact material: Copper, with gold plate over nickel plate. See page A-69 for additional contact materials.

RETURN SPRING: Music wire, phosphor coated.

MOUNTING NUT: Brass, nickel plated.

TERMINAL SEAL: Epoxy.

## Build-A-Switch

To order, simply select desired option from each category and place in the appropriate box. Available options are shown and described on pages A-68 and A-70. For additional options not shown in catalog, consult Customer Service Center.

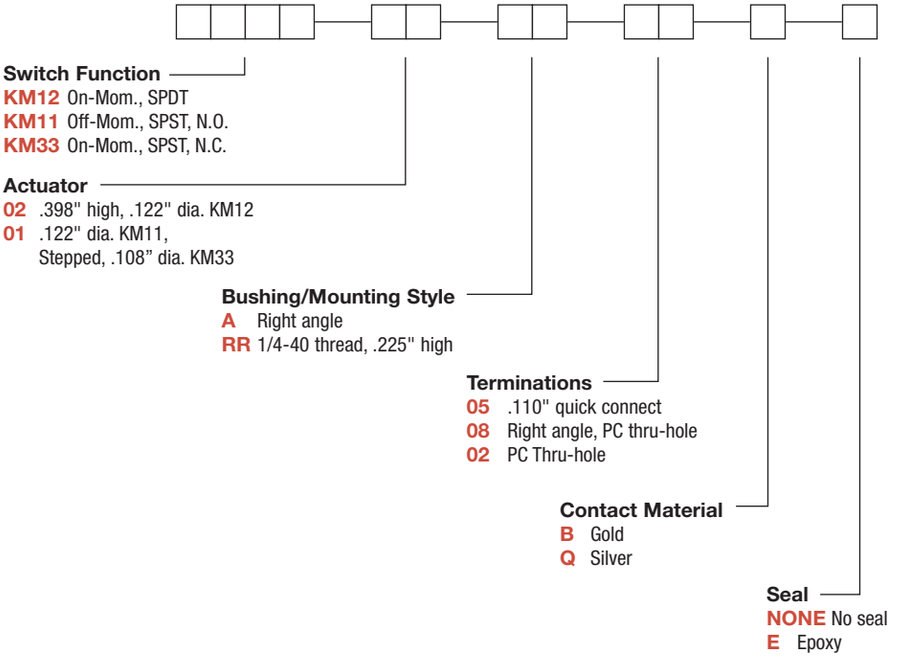

# KM Series
# Subminiature Pushbutton Switches

## SWITCH FUNCTION

| NO. POLES | MODEL NO. | SWITCH FUNCTION POS. 1 | SWITCH FUNCTION POS. 2 | CONNECTED TERMINALS POS. 1 | CONNECTED TERMINALS POS. 2 | SCHEMATIC |
|---|---|---|---|---|---|---|
| SP | KM11 | OFF | MOM. | OPEN | 2-1 | SPST N.O. |
| | KM33 | ON | MOM. | 2-1 | OPEN | SPST N.C. |

### SPST

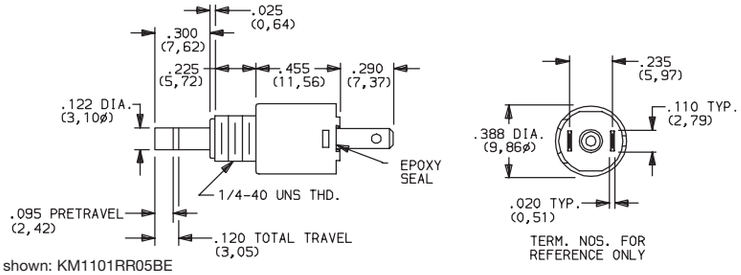


Part number shown: KM1101RR05BE

| | | | | | | |
|---|---|---|---|---|---|---|
| SP | KM12 | ON | MOM. | 2-1 | 4-3 | SPDT |

### SPDT

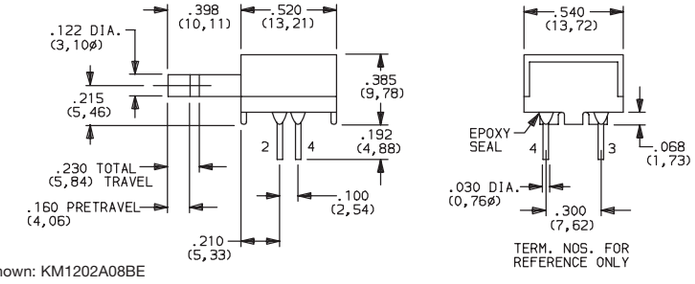


Part number shown: KM1202A08BE

## ACTUATOR

**02** .398" HIGH, .122" DIA.

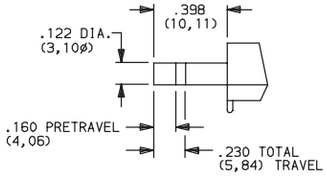


KM12 models only.

**01** .122" DIA.

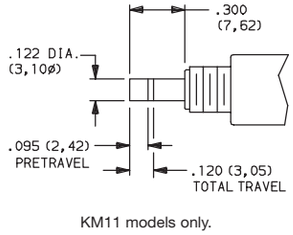


KM11 models only.

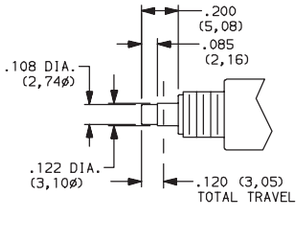


KM33 models only.

**NOTE:** Caps available for plunger options, see page A-70.

Third Angle Projection

*Dimensions are shown: Inches (mm)*
*Specifications and dimensions subject to change*

## BUSHING/ MOUNTING STYLE

**A** RIGHT ANGLE

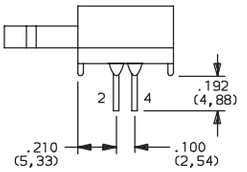


KM12 models only.

**RR** 1/4-40 THREAD, .225" HIGH

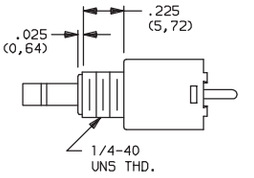


KM11 & KM33 models only.

**PANEL MOUNTING**

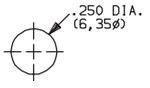


KM11 & KM33 models.

**PC MOUNTING**

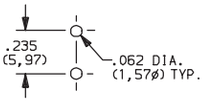


KM11 models only.

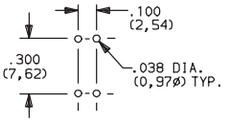


KM12 models only.

## TERMINATIONS

**05** .110" QUICK CONNECT

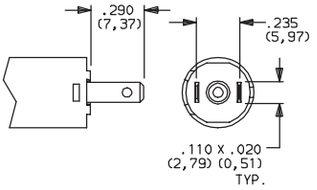


**08** RIGHT ANGLE, PC THRU-HOLE

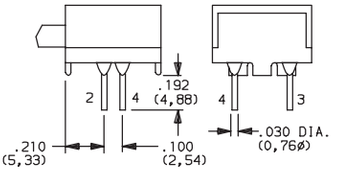


KM12 models only.

**02** PC THRU-HOLE

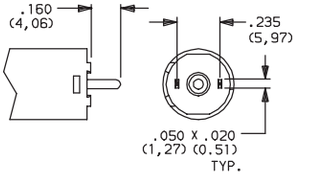


KM11 models only.

## CONTACT MATERIAL

| OPTION CODE | RoHS COMPLIANT * | RoHS COMPATIBLE * | CONTACT AND TERMINAL MATERIAL | RATINGS | |
|---|---|---|---|---|---|
| B | YES | YES | GOLD [1] | LOW LEVEL/DRY CIRCUIT | 0.4 VA MAX. @ 20 V AC OR DC MAX. |
| Q | YES | YES | SILVER [2] | POWER | 0.25 AMPS @ 125 V AC OR DC (KM11, KM12) (UL)<br>1 AMP @ 125 V AC OR 28 V DC (KM33). |

* Note: See Technical Data section of this catalog for RoHS compliant and compatible definitions and specifications.

[1] STATIONARY CONTACTS & TERMINALS: Copper, with gold plate over nickel plate.
MOVABLE CONTACT: Phosphor bronze or beryllium copper, with gold plate over nickel plate.

[2] STATIONARY CONTACTS & TERMINALS: Copper, silver plated (standard with all termination options).
MOVABLE CONTACT: Phosphor bronze or beryllium copper, silver plated.

[3] STATIONARY CONTACTS & TERMINALS: Copper, with gold plate over nickel plate over silver plate.
MOVABLE CONTACT: Phosphor bronze or beryllium copper, with gold plate over nickel plate over silver plate.

**NOTE:** Any models supplied with Q or B contact material are RoHS compliant.

KM11, KM12 models ® when ordered with 'Q' contact material.

## SEAL

**NONE** NO SEAL

**E** EPOXY SEAL

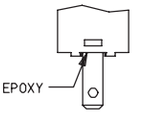


Third Angle Projection

*Dimensions are shown: Inches (mm)*
*Specifications and dimensions subject to change*

# KM Series
# Subminiature Pushbutton Switches

## AVAILABLE HARDWARE

**Cap, KM33 models**

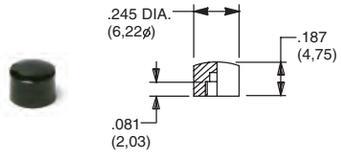


**PART NO.**

**785101000** WHITE
**785102000** BLACK
**785103000** RED

Material: Nylon
Finish: Gloss

**Cap, KM11 and KM12 models**

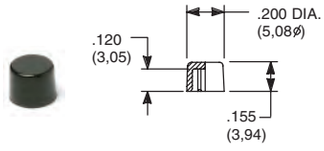


**PART NO.**

**708901000** WHITE
**708902000** BLACK
**708903000** RED

Material: Nylon
Finish: Gloss

**Cap, KM11 and KM12 models**

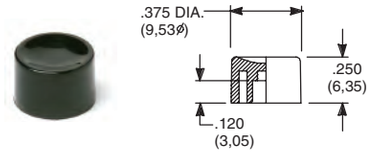


**PART NO.**

**752701000** WHITE
**752702000** BLACK
**752703000** RED

Material: Nylon
Finish: Gloss

**Cap, KM11 and KM12 models**

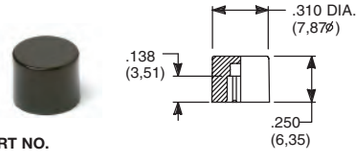


**PART NO.**

**801801000** WHITE
**801802000** BLACK
**801803000** RED

Material: Nylon
Finish: Gloss

**Cap, KM11 models**

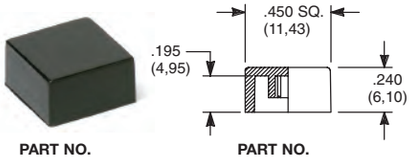


**PART NO.**

**484601000** WHITE
**484602000** BLACK
**484603000** RED

Material: Nylon
Finish: Gloss

**PART NO.**

**798201000** WHITE
**798202263** BLACK
**798203000** RED

Material: Nylon
Finish: Matte

**NOTE**: Other cap colors available, consult Customer Service Center.

Third Angle Projection

*Dimensions are shown: Inches (mm)*
*Specifications and dimensions subject to change*

# 8600 Series
# Microminiature Pushbutton Switches

## *Features/Benefits*

- ***Available with overtravel***
- ***Normally closed models available***
- ***Microminiature size ideal for applications where space is limited***
- ***RoHS compliant***

## *Typical Applications*

- ***Detection***
- ***Telecommunications and networking equipment***
- ***Computers and peripherals***

Models Available

## Specifications

CONTACT RATING: Q contact material (8631, 8632 Models): 500 mA @ 120 V AC or 28 V DC; 250 mA @ 250 V AC; (8633 Model): 250 mA @ 120 V AC or 28 V DC; 125 mA @ 250 V AC. See page A-73 for additional ratings.

ELECTRICAL LIFE:
8631 and 8633 MODELS: 250,000 actuations at full load.
8632 MODEL: 100,000 actuations at full load.

CONTACT RESISTANCE: Below 30 mΩ typ. initial @ 2-4 V DC, 100 mA, for both silver and gold plated contacts.

INSULATION RESISTANCE: 109 Ω min.

DIELECTRIC STRENGTH: 500 Vrms min. @ sea level.

OPERATING TEMPERATURE: –30°C to 65°C.

SOLDERABILITY: Per MIL-STD-202F method 208D, or EIA RS-186E method 9.

## Materials

CASE: Glass filled phenolic or diallyl phthalate (DAP), (UL94V-0).

PLUNGER: Glass filled nylon (UL94V-0), black standard.

BUSHING: Brass, nickel plated.

CONTACTS: Q contact material: Coin silver, silver plated. See page A-73 for additional contact materials.

TERMINALS:
8631, 8632 MODELS: Copper alloy, silver plated.
8633 MODEL: Q contact material: Coin silver.
See page A-73 for additional contact materials.

TERMINAL SEAL:
8633 MODEL: Epoxy.
8631, 8632 MODELS: Terminals insert molded.

HARDWARE: Nut: Brass, nickel plated.

**NOTE:** Any models supplied with Q, B or G contact material are RoHS compliant.

**NOTE:** Specifications and materials listed above are for switches with standard options. For information on specific and custom switches, consult Customer Service Center.

## Build-A-Switch

To order, simply select desired option from each category and place in the appropriate box. Available options are shown and described on pages A-72 and A-73. For additional options not shown in catalog, consult Customer Service Center.

**Switch Function**
**8631** SPST Off-Mom.
**8632** SPST Off-Mom.
**8633** SPST On-Mom.

**Termination**
**Z** Solder lug
**C** PC Thru-hole

**Contact Material**
**B** Gold
**Q** Silver
**G** Gold over silver

**Seal**
**D** No epoxy
**E** Epoxy

**Plunger Color**
**2** Black
**3** Red

# 8600 Series
# Microminiature Pushbutton Switches

## SWITCH FUNCTION

| NO. POLES | MODEL NO. | SWITCH FUNCTION POS. 1 | SWITCH FUNCTION POS. 2 | TOTAL TRAVEL | ACTUATION FORCE | SCHEMATIC |
|---|---|---|---|---|---|---|
| SP | 8631 | OFF | MOM. | .040 (1,02) TYP. | 5 oz (140g) TYP. | N.O. |

**SPST**

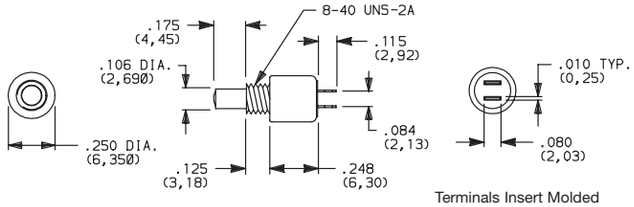


**PANEL MOUNTING**

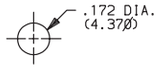


Part number shown: 8631ZQD2

Terminals Insert Molded

| NO. POLES | MODEL NO. | SWITCH FUNCTION POS. 1 | SWITCH FUNCTION POS. 2 | TOTAL TRAVEL | ACTUATION FORCE | SCHEMATIC |
|---|---|---|---|---|---|---|
| SP | 8632 | OFF | MOM. | .106 (2,69) TYP. with overtravel .024 (0,61) TYP. | 6.25 oz (177g) TYP. | N.O. with overtravel |

**SPST**

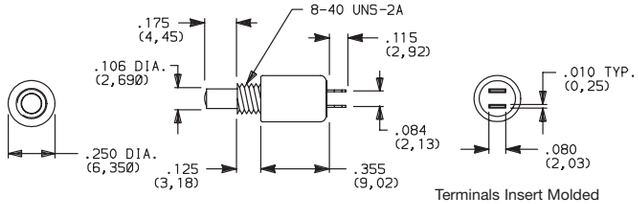


**PANEL MOUNTING**

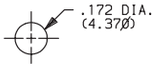


Part number shown: 8632ZQD2

Terminals Insert Molded

| NO. POLES | MODEL NO. | SWITCH FUNCTION POS. 1 | SWITCH FUNCTION POS. 2 | TOTAL TRAVEL | ACTUATION FORCE | SCHEMATIC |
|---|---|---|---|---|---|---|
| SP | 8633 | ON | MOM. | .048 (1,22) TYP. | 5 oz (140g) TYP. | N.C. |

**SPST**

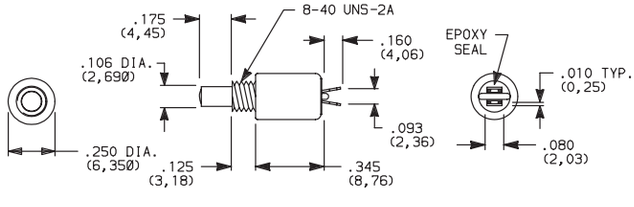


**PANEL MOUNTING**

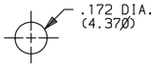


Part number shown: 8633ZQE2

MOM. = Momentary

**NOTE:** Caps available for plunger options, see page A-73.

## TERMINATIONS

**Z** SOLDER LUG

8631, 8632 models only.

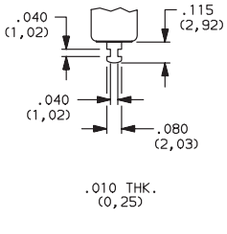


8633 models only.

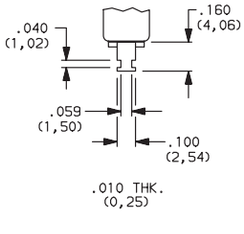


**C** PC THRU-HOLE

8631, 8632 models only.

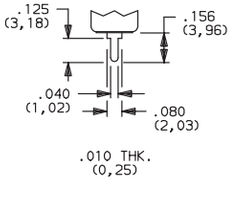


**PC MOUNTING**

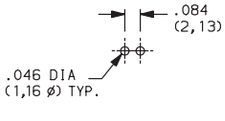


Third Angle Projection

*Dimensions are shown: Inches (mm)*
*Specifications and dimensions subject to change*

## CONTACT MATERIAL

| OPTION CODE | RoHS COMPLIANT * | RoHS COMPATIBLE * | CONTACT MATERIAL | TERMINAL PLATING | RATINGS | |
|---|---|---|---|---|---|---|
| B | YES | YES | GOLD [1] | GOLD [1] | LOW LEVEL/ DRY CIRCUIT | 0.4 VA MAX. @ 20 V AC OR DC MAX. |
| Q | YES | YES | SILVER [4] | SILVER [5] | POWER | 8631, 8632 MODELS: 500 mA @ 120 V AC OR 28 V DC; 250 mA @ 250 V AC. 8633 MODELS: 250 mA @ 120 V AC OR 28 V DC; 125 mA @ 250 V AC. |
| G | YES | YES | GOLD OVER SILVER [4] | GOLD [3] | LOW LEVEL/DRY CIRCUIT OR POWER | 0.4 VA MAX @ 20 V AC OR DC MAX. OR 8631, 8632 MODELS: 500 mA @ 120 V AC OR 28 V DC; 250 mA @ 250 V AC. 8633 MODELS: 250 mA @ 120 V AC OR 28 V DC; 125 mA @ 250 V AC. |

* Note: See Technical Data section of this catalog for RoHS compliant and compatible definitions and specifications.

[1] CONTACTS & TERMINALS: Copper alloy, with gold plate over nickel plate.
[2] CONTACTS: Coin silver, with gold plate over nickel plate.
[3] TERMINALS: Copper alloy, with gold plate over nickel plate.
8633 model only: Coin silver, with gold plate over nickel plate.
[4] CONTACTS: Coin silver, silver plated.
[5] TERMINALS: Copper alloy, silver plated. 8633 model only: coin silver.

**NOTE:** Any models supplied with Q, B or G contact material are RoHS compliant.

8631, 8632 models ® with all options when ordered with G or Q contact material.
Q contact material standard with C, Z terminations.

## SEAL

**D** NO EPOXY SEAL

Not available on 8633 model.
Standard on 8631, 8632 models.

**E** EPOXY SEAL

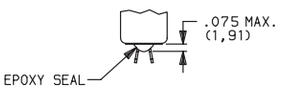


Not available on 8631, 8632 models.
Standard on 8633 model only.

## PLUNGER COLOR

| OPTION CODE | COLOR |
|---|---|
| 2 | BLACK |
| 3 | RED |

## AVAILABLE HARDWARE

**Cap**

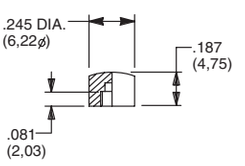


**PART NO.**

**785101000** WHITE
**785102000** BLACK
**785103000** RED

Material: Nylon
Finish: Gloss

**NOTE:** Other cap colors available, consult Customer Service Center.

Third Angle Projection

*Dimensions are shown: Inches (mm)*
*Specifications and dimensions subject to change*

# 8700 Series
# Overtravel Pushbutton Switches

### *Features/Benefits*

- ***Extended pre-travel or over-travel***
- ***Heavy-duty brass plunger***
- ***Long electrical life — 100K cycles***
- ***RoHS compliant***

### *Typical Applications*

- ***Telecommunications***
- ***High end Instrumentation***
- ***Medical & test equipment***
- ***Detection***

## Specifications

CONTACT RATING: Q contact material: 1 AMP @ 120 V AC or 28 V DC. See page A-76 for additional ratings.

ELECTRICAL LIFE: 100,000 actuations at full load.

CONTACT RESISTANCE: Below 30 mΩ typ. Initial @ 2-4 V DC, 100 mA.

INSULATION RESISTANCE: $10^3\Omega$ min.

DIELECTRIC STRENGTH: 1,000 Vrms min. @ sea level.

OPERATING TEMPERATURE: –30°C to 65°C.

**NOTE:** Any models supplied with Q, or B contact material are RoHS compliant.

**NOTE:** Specifications and materials listed above are for switches with standard options. For information on specific and custom switches, consult Customer Service Center.

## Materials

CASE: Diallyl phthalate (DAP) (UL 94V-0).

PLUNGER:
8731 – .390" brass, nickel plated.
8732 – .390" PBT polyester, black.

BUSHING: brass, nickel plated.

CONTACTS: Q contact material: Coin silver, silver plated. See page A-76 for additional contact materials.

TERMINALS: Q contact material: Copper alloy, silver plated. See page A-76 for additional contact materials.

TERMINAL SEAL: Epoxy.

HARDWARE: Nut: Brass, nickel plated; lockwasher: Steel, bright nickel plate. One mounting nut & lockwasher supplied with all switches.

## Build-A-Switch

To order, simply select desired option from each category and place in the appropriate box. Available options are shown and described on pages A-75 and A-76. For additional options not shown in catalog, consult Customer Service Center. All models have epoxy terminal seal and are compatible with all “bottom-wash” PCB cleaning methods.

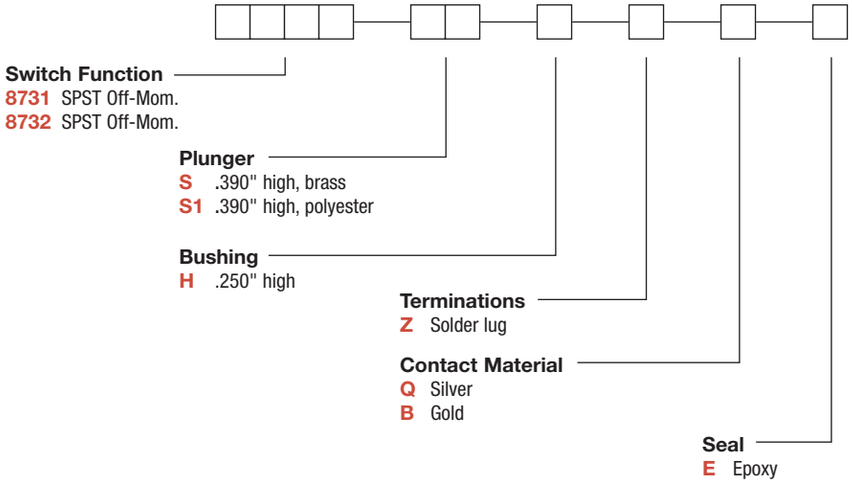

## SWITCH FUNCTION

| NO. POLES | MODEL NO. | SWITCH FUNCTION POS. 1 | SWITCH FUNCTION POS. 2 | TOTAL TRAVEL | | ACTUATION FORCE | SCHEMATIC |
|---|---|---|---|---|---|---|---|
| SP | 8731 | OFF | MOM. | .390 (9,91) TYP. | with overtravel .311 TYP. | 4.7 oz TYP. | N.O. with overtravel SPST |

**SPST**

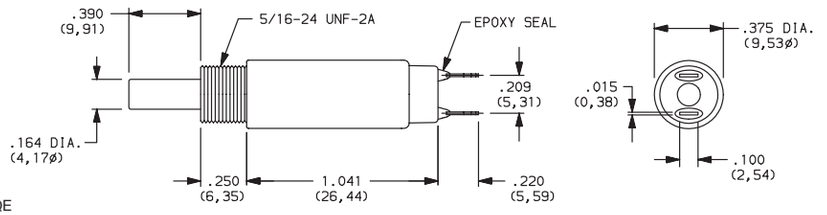


Part number shown: 8731SHZQE

| SP | 8732 | OFF | MOM. | .390 (9,91) TYP. | with overtravel .350 TYP. | 2.2 oz TYP. | N.O. with overtravel SPST |
|---|---|---|---|---|---|---|---|

**SPST**

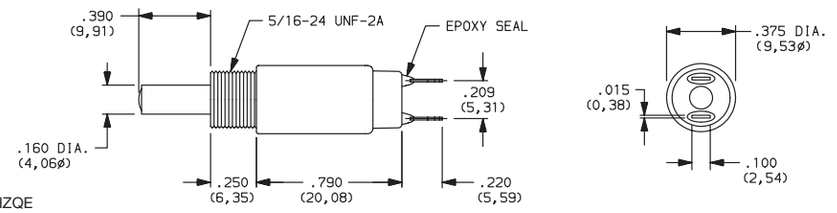


Part number shown: 8732S1HZQE

MOM. = Momentary

## PLUNGER

**S** .390" HIGH, BRASS

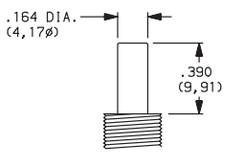


Available with 8731 model only.

**S1** .390" HIGH, PBT POLYESTER

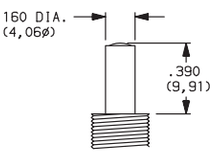


Available with 8732 model only.

## BUSHING

**H** .250" HIGH

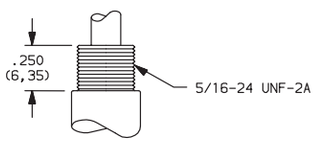


**PANEL MOUNTING**

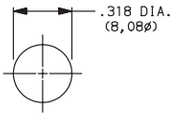


Third Angle Projection

*Dimensions are shown: Inches (mm)*
*Specifications and dimensions subject to change*

# 8700 Series
# Overtravel Pushbutton Switches

## TERMINATIONS

**Z** SOLDER LUG

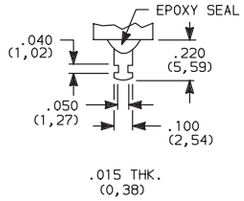


## CONTACT MATERIAL

| OPTION CODE | RoHS COMPLIANT * | RoHS COMPATIBLE * | CONTACT MATERIAL | TERMINAL PLATING | RATINGS | |
|---|---|---|---|---|---|---|
| Q | YES | YES | SILVER | SILVER | POWER | 1 AMP @ 125 V AC OR 28 V DC. |
| B | YES | YES | GOLD | GOLD | LOW LEVEL/DRY CIRCUIT | 0.4 VA MAX. @ 20 V AC OR DC MAX. |

* Note: See Technical Data section of this catalog for RoHS compliant and compatible definition and specifications.

**NOTE:** Any models supplied with Q, or B contact material are RoHS compliant.

## SEAL

**E** EPOXY SEAL

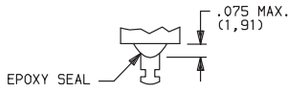


Third Angle Projection

*Dimensions are shown: Inches (mm)*
*Specifications and dimensions subject to change*

# GP Series
# Sealed Ultraminiature Pushbutton Switches

## *Features/Benefits*

- ***Ultraminiature design saves space***
- ***Process compatible, withstands most soldering and washing processes***
- ***Thru-hole and surface mount models available***
- ***Sealed construction—internal o-ring and epoxy base***
- ***RoHS compliant***

## *Typical Applications*

- ***Telecommunications and network equipment***
- ***Computers and peripheral products***
- ***Instrumentation***
- ***Medical Applications***

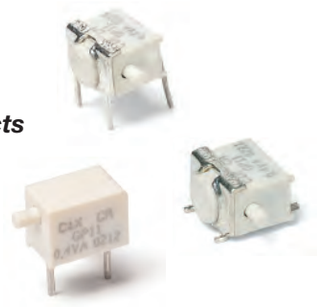

## Specifications

CONTACT RATING: 0.4 VA max. @ 20 V AC or DC max.

MECHANICAL & ELECTRICAL LIFE: 40,000 make-and-break cycles at full load.

CONTACT RESISTANCE: Below 50 mΩ typ. initial @ 2-4 V DC, 100 mA.

INSULATION RESISTANCE: $10^9\Omega$ min.

DIELECTRIC STRENGTH: 500 Vrms min. @ sea level.

OPERATING TEMPERATURE: –40°C to 85°C.

SOLDERABILITY: Per MIL-STD-202F method 208D, or EIA RS-186E method 9 (1 hour steam aging).

DEGREE OF PROTECTION: IP57; Protection against harmful dust deposit, full-scale voltage protection, temporary immersion.

PACKAGING: Surface mount switches standard in anti-static tape and reel packaging per EIA 481-3, see page A-80 for drawings and reel information. Thru-Hole parts are shipped in trays.

All models are RoHS compliant and compliant.

## Materials

HOUSING & BASE: Glass filled nylon 4/6, flame retardant, heat stabilized (UL 94V-0).

ACTUATOR: Glass filled nylon 4/6, flame retardant (UL 94V-0) with standard internal o-ring seal.

SWITCH SUPPORT: Brass, tin plated.

MOVABLE CONTACT: Copper alloy, with gold plate over nickel plate.

STATIONARY CONTACTS Copper alloy, with gold plate over nickel plate.

TERMINALS: Copper alloy, with gold flash over nickel plate.

TERMINAL SEAL: Epoxy/Urethane. All terminals insert molded.

**NOTE:** Any models supplied with B contact material are RoHS compliant and compatible.

**NOTE:** Materials listed above are general specifications. Specifications available for specific and custom switches, consult Customer Service Center.

**CAUTION:** PC mounting layouts and pads as shown are designed to be compatible with the latest equipment and reflow techniques. Care should be taken in the design and location of PC lands to suit individual needs. Orientation relative to reflow direction may significantly impact solder joint integrity.

## How To Order

Complete part numbers for GP Series Sealed Ultraminiature Pushbutton Switches are shown on pages A-78 thru A-80.

| PART NUMBER | SWITCH FUNCTION POS.1 | SWITCH FUNCTION POS. 2 | SCHEMATIC |
|---|---|---|---|
| **GP11MCBE** | OFF | MOM. | 1 3 SPST |
| Conn. Terms. | OPEN | 1-3 | |
| **GP12MCBE** | ON | MOM. | 2 (COMM) NC 1 3 NO SPDT |
| Conn. Terms. | 2-1 | 2-3 | |

MOM. = Momentary

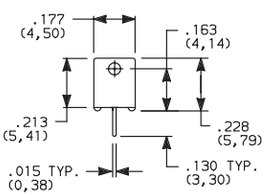


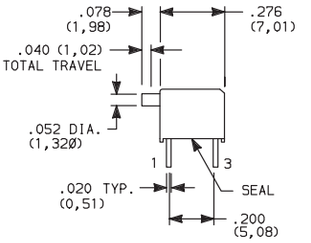


Terminal nos. for reference only.

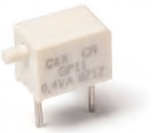

GP11MCBE
**SPST**

**PC MOUNTING**

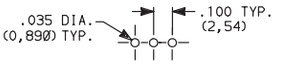


GP11– omit center hole.

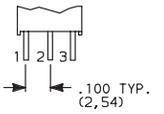


GP12 Model

*Dimensions are shown: Inches (mm)*
*Specifications and dimensions subject to change*

# GP Series
# Sealed Ultraminiature Pushbutton Switches

GP11MABE
**SPST**

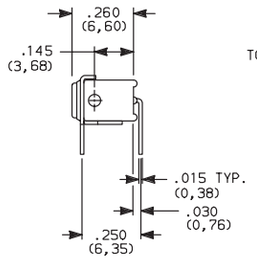


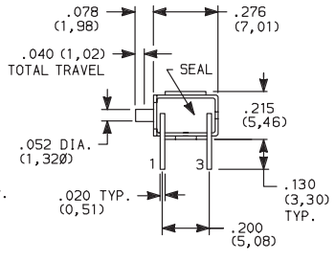


Terminal nos.
for reference only.

**PC MOUNTING**

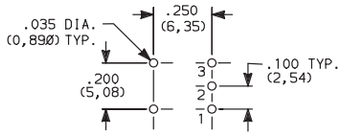


GP11– omit hole 2.

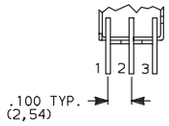


GP12 Model

| PART NUMBER | SWITCH FUNCTION POS.1 | SWITCH FUNCTION POS. 2 | SCHEMATIC |
|---|---|---|---|
| GP11MABE | OFF | MOM. | SPST |
| Conn. Terms. | OPEN | 1-3 | |
| GP12MABE | ON | MOM. | SPDT |
| Conn. Terms. | 2-1 | 2-3 | |

MOM. = Momentary

GP11MSABE
**SPST**

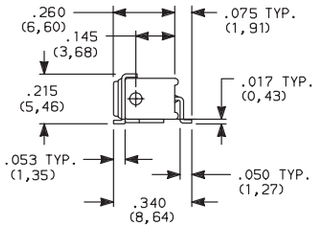


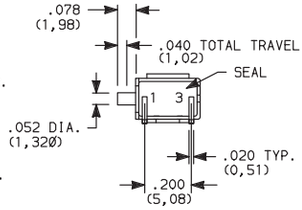


Terminal nos.
for reference only.

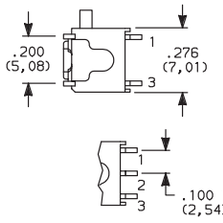


GP12 Model

**PC MOUNTING**

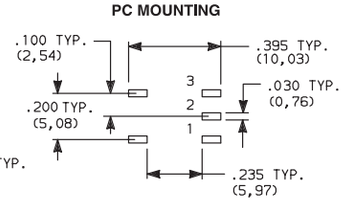


GP11– omit pad 2.

| PART NUMBER | SWITCH FUNCTION POS.1 | SWITCH FUNCTION POS. 2 | SCHEMATIC |
|---|---|---|---|
| GP11MSABE | OFF | MOM. | SPST |
| Conn. Terms. | OPEN | 1-3 | |
| GP12MSABE | ON | MOM. | SPDT |
| Conn. Terms. | 2-1 | 2-3 | |

MOM. = Momentary

GP11MSA1BE
**SPST**

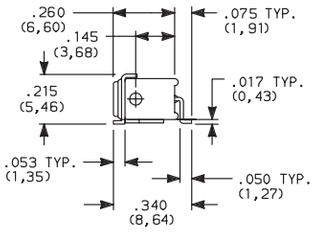


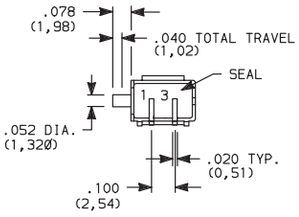


Terminal nos.
for reference only.

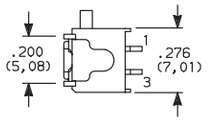


**PC MOUNTING**

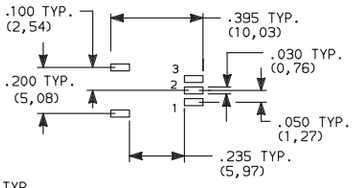


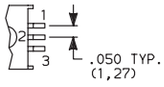


GP12 Model

GP11– omit pad 2.

| PART NUMBER | SWITCH FUNCTION POS.1 | SWITCH FUNCTION POS. 2 | SCHEMATIC |
|---|---|---|---|
| GP11MSA1BE | OFF | MOM. | SPST |
| Conn. Terms. | OPEN | 1-3 | |
| GP12MSA1BE | ON | MOM. | SPDT |
| Conn. Terms. | 2-1 | 2-3 | |

MOM. = Momentary

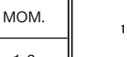

Third Angle
Projection

*Dimensions are shown: Inches (mm)*
*Specifications and dimensions subject to change*

| PART NUMBER | SWITCH FUNCTION POS.1 | SWITCH FUNCTION POS. 2 | SCHEMATIC |
|---|---|---|---|
| GP12MSCBE | ON | MOM. | 2 (COMM) NC 1 3 NO SPDT |
| Conn. Terms. | 2-1 | 2-3 | |

MOM. = Momentary

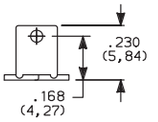


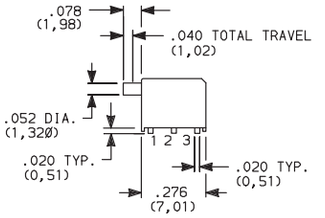


Terminal nos.
for reference only.

GP12MSCBE
**SPDT**

**PC MOUNTING**

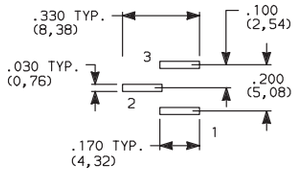


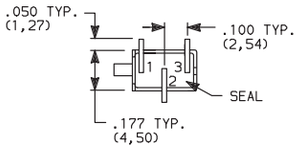


**NOTE:** Recommended for infrequent use applications only
For increased switch mounting strength, order, SV1 termination style with support bracket (see below).

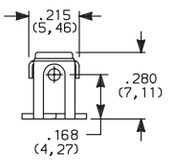


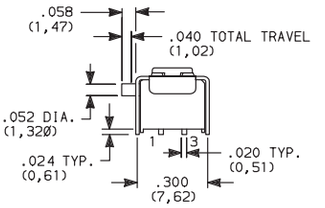

GP11MSV1BE
**SPST**

| PART NUMBER | SWITCH FUNCTION POS.1 | SWITCH FUNCTION POS. 2 | SCHEMATIC |
|---|---|---|---|
| GP11MSV1BE | OFF | MOM. | 1 3 SPST |
| Conn. Terms. | OPEN | 1-3 | |
| GP12MSV1BE | ON | MOM. | 2 (COMM) NC 1 3 NO SPDT |
| Conn. Terms. | 2-1 | 2-3 | |

MOM. = Momentary

**PC MOUNTING**
**GP11 MODELS**

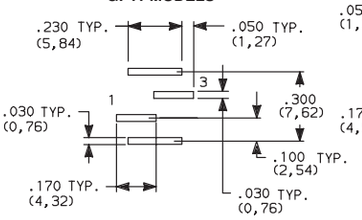


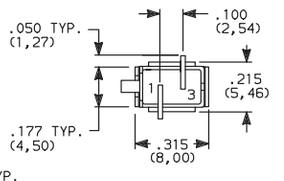


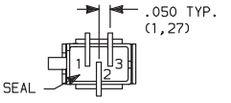


GP12 Model

Terminal nos.
for reference only.

**PC MOUNTING**
**GP12 Models**

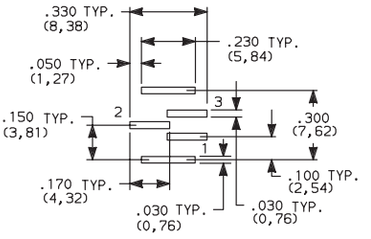


Third Angle
Projection

*Dimensions are shown: Inches (mm)*
*Specifications and dimensions subject to change*

# GP Series
# Sealed Ultraminiature Pushbutton Switches

## TAPE & REEL

For part numbers GP11MSV1BE, GP12MSV1BE

| REEL INFORMATION | |
|---|---|
| OUTSIDE DIAMETER | 13.00 (330,0) |
| PILOT HOLE | .512 (13,0) |
| QUANTITY PER REEL | 600 |

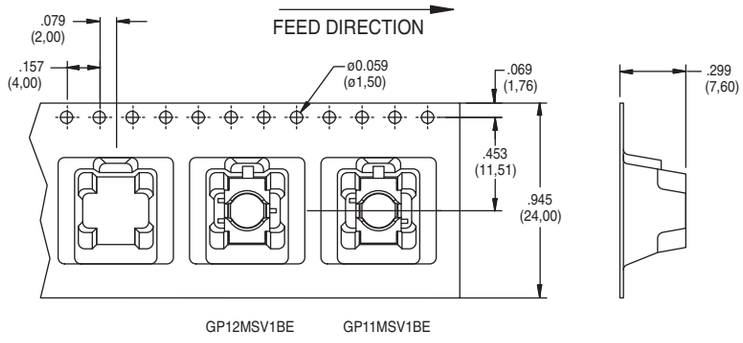


For part numbers GPXXSA1BE, GPXXMSABE

| REEL INFORMATION | |
|---|---|
| OUTSIDE DIAMETER | 13.00 (330,0) |
| PILOT HOLE | .512 (13,0) |
| QUANTITY PER REEL | 600 |

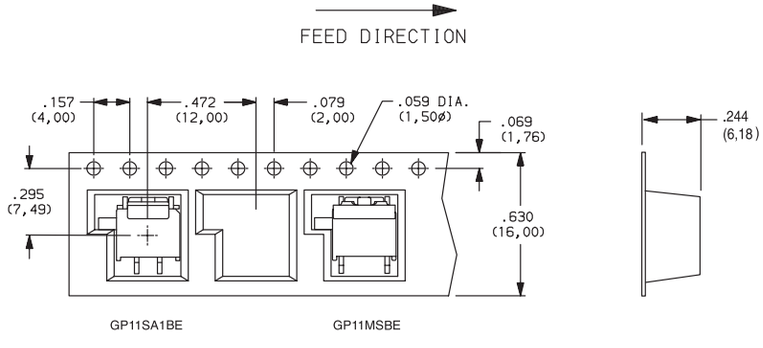


For part numbers GP12MSCBE

| REEL INFORMATION | |
|---|---|
| OUTSIDE DIAMETER | 13.00 (330,0) |
| PILOT HOLE | .512 (13,0) |
| QUANTITY PER REEL | 600 |

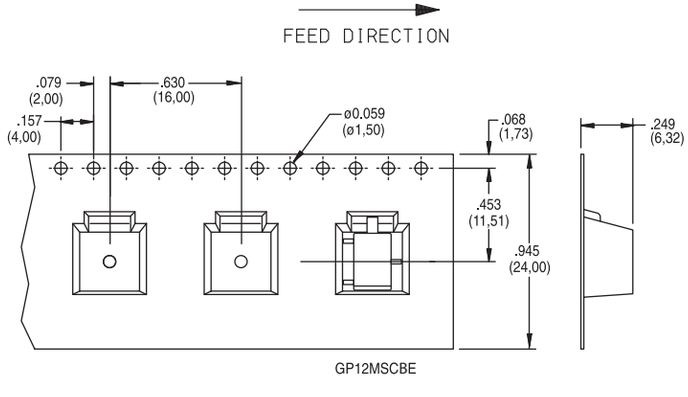


Third Angle Projection

*Dimensions are shown: Inches (mm)*
*Specifications and dimensions subject to change*

# PN Series
# Alternate & Momentary Action Pushbutton Switches

## *Features/Benefits*

- ***Momentary or locking action***
- ***Different actuation forces for customized feel***
- ***Low cost, reliable contact design***
- ***Single and double pole options***
- ***RoHS compliant***

## *Typical Applications*

- ***Computers and peripherals***
- ***Instrumentation and measurement equipment***
- ***Non-power, on-off switch applications***

## Specifications

CONTACT RATING: 0.2 AMP @ 30 V DC max.
ELECTRICAL LIFE: 10,000 make-and-break cycles at full load.
MECHANICAL LIFE: 10,000 on/off cycles.
CONTACT RESISTANCE: 30 mΩ max. initial
INSULATION RESISTANCE: 100 MΩ min.
DIELECTRIC STRENGTH: 500 V AC min.
OPERATING/STORAGE TEMPERATURES: –10°C to 60°C.
PACKAGING: Switches are supplied in anti-static trays.

## Materials

FRAME: Tin plated steel.
ACTUATOR: PA 66 black.
BASE: Phenolic resin.
TERMINALS: Silver plated brass.
MOVABLE CONTACTS: Silver plated phosphor bronze.
RETURN SPRING: SWC
DETENT SPRING: Phosphor bronze.
DETENT SPRING PLATE: Phosphor bronze.
RETURN SPRING RETAINER RING: Nickel plated steel.
TERMINAL SEAL: Epoxy.

## Build-A-Switch

To order, simply select desired option from each category and place in the appropriate box. For additional options not shown in catalog, consult Customer Service Center.

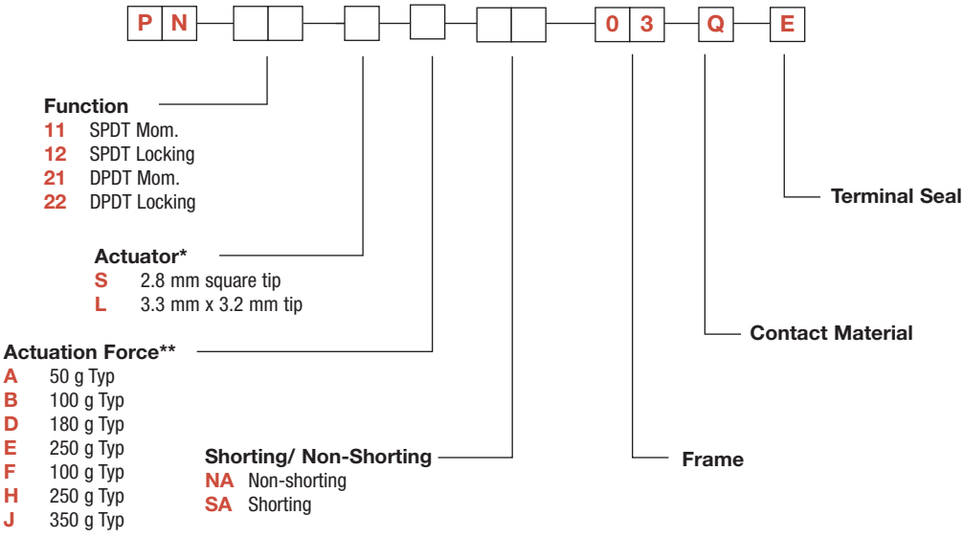


* Note - The switch body style dimenions differ for each of these 3 groupings

"S" actuator available for PN 11 & PN 12 options

"S" actuator available for PN 21 & PN 22 options

"L" actuator available for PN 21 & PN 22 options

** Actuation Force "A" only available with PN11 with "S" actuator

PN 11 & PN 21 available with Acuation Force "B", "D", "E", "F", "H", "J"

PN 12 & PN 22 available with Actuation Force "D", "E", "H", "J"

Full travel

# PN Series
# Alternate & Momentary Action Pushbutton Switches

**PN 11** SPDT Mom.
**PN 12** SPDT Locking

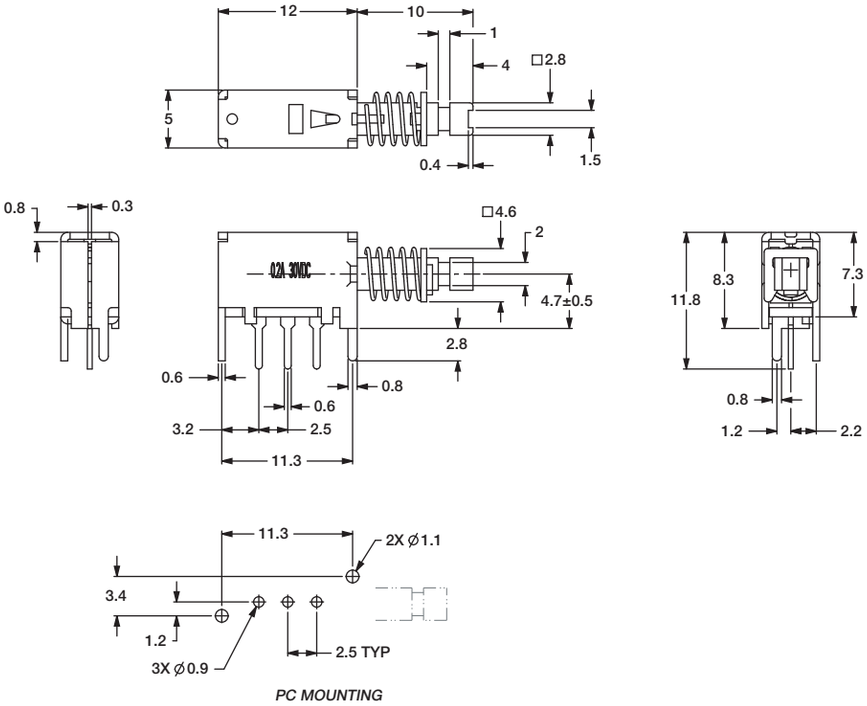


*PC MOUNTING*

**PN 21** DPDT Mom. with "S" Actuator
**PN 22** DPDT Locking with "S" Actuator

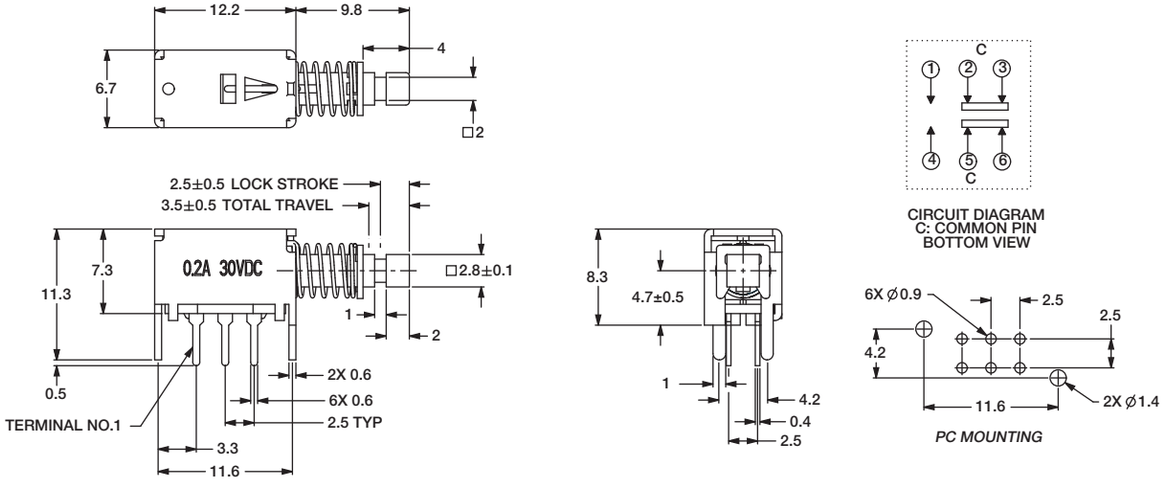


*PC MOUNTING*

Third Angle Projection

*Dimensions are shown: mm*
*Specifications and dimensions subject to change*

**PN 21** DPDT Mom. with "L" Actuator
**PN 22** DPDT Locking with "L" Actuator

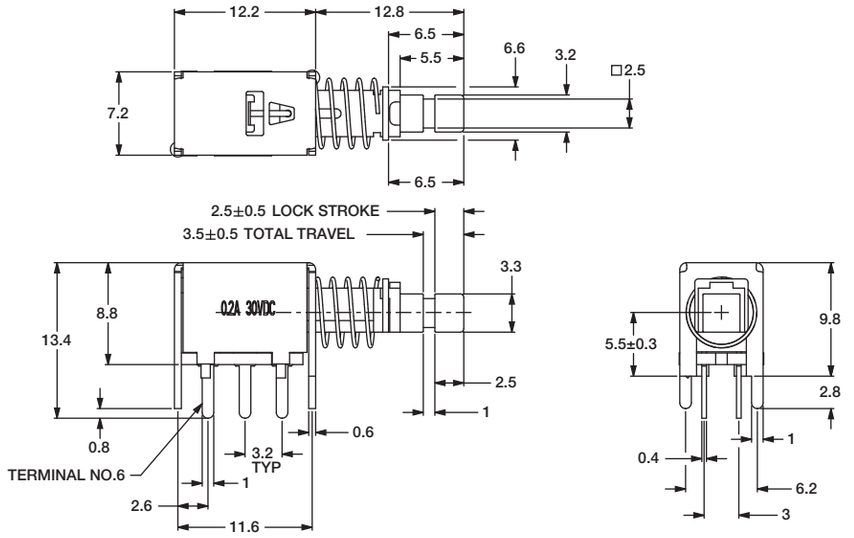


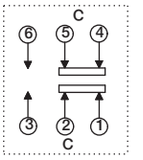


CIRCUIT DIAGRAM
C: COMMON PIN
BOTTOM VIEW

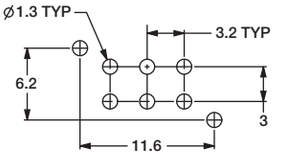


*PC MOUNTING*

**BUTTONS MUST BE ORDERED SEPARATELY. SHIPPED IN BULK.**

## PE

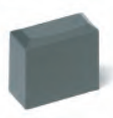

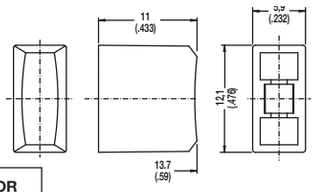


| OPTION CODE | COLOR |
|---|---|
| RD | Red |
| GY | Gray |
| BK | Black |
| WH | White |

PE and PV buttons fit "L" actuators

## PV

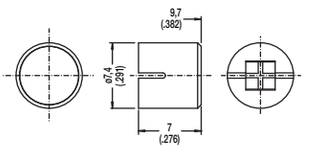


### Indexed

**G001A** Black
**G001G** Gray
**G001I** Ivory
**G001R** Red

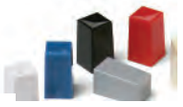

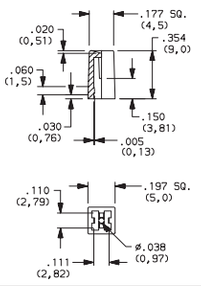


### Rectangular

**G002A** Black
**G002G** Gray
**G002I** Ivory
**G002R** Red

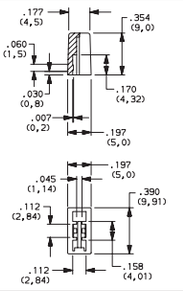


### Round

**G003A** Black
**G003G** Gray
**G003I** Ivory
**G003R** Red

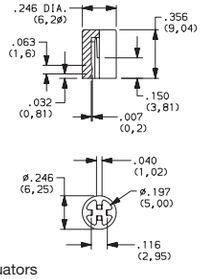


G001, G002, G003 and G004 buttons fit "S" actuators

### Square

**G004A** Black
**G004G** Gray
**G004I** Ivory
**G004R** Red

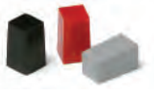

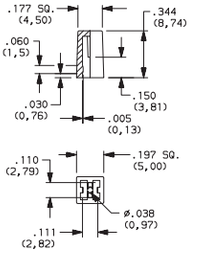


Third Angle Projection

*Dimensions are shown: Inches (mm)*
*Specifications and dimensions subject to change*

# PHB Series
# Short Stroke Pushbutton Switches

## *Features/Benefits*

- ***Momentary or latching action***
- ***Low cost, reliable contact design***
- ***2 & 4 pole configurations***
- ***Sealed contacts***
- ***Optional buttons***
- ***RoHS compliant***

## *Typical Applications*

- ***Computers and peripherals***
- ***Instrumentation and measurement equipment***
- ***Non-power, on-off switch applications***

## Specifications

RATING: 1 A @ 15 V DC

DIELECTRIC STRENGTH (50 Hz/1 min.): 500 V DC between terminals or between terminals and frame for 1 minute

OPERATING LIFE: 10,000 cycles at rated load

CONTACT RESISTANCE: 20 m Ωohms initial

INSULATION RESISTANCE: 100 M Ωohms

TOTAL TRAVEL/LATCHING TRAVEL: 2.5mm (± 0.5 mm) / 1.5mm (± 0.5 mm) to latch EE option (push-push)

OPERATING FORCE:
2U option: 170 grams ± 100 grams (1.67 ± 0.98N)
4U option: 230 grams ± 100 grams (2.26 ± 0.98N)

OPERATING TEMPERATURE: -10˚C to 60˚C

BOUNCE TIME: ≤10 ms

SEALING: Sealed contacts.

PACKAGING: Switches; PHB2 models: 84 pcs per tray; PHB4 models 72 pcs per tray
Optional Caps; Bulk bag - 100 caps per bag

## Materials

FIXED TERMINAL: Brass, silver plated

MOVABLE CONTACT: Phosphor bronze, silver plated

COVER: PA 66 Black

COVER TO BASE RETAINING CLIP: POM

ACTUATOR: POM

RETURN SPRING: Stainless steel

SPRING RETAINING RING: Steel, nickel plate

BASE: Phenolic resin

TERMINAL SEAL: Epoxy.

**NOTE:** Specifications and materials listed above are for switches with standard options. For information on specific and custom switches, consult Customer Service Center.

## Build-A-Switch

To order, simply select desired option from each category and place in the appropriate box. For additional options not shown in catalog, consult Customer Service Center.

### Switch

P H B — [ ][ ] — [ ][ ] — [ ][ ] — 1 A

**Contact Arrangement**
**2U** 2 Changeovers
**4U** 4 Changeovers

**Mechanical Function**
**OA** Momentary
**EE** Push-push

**Termination**
**TS** Straight
**SN** Kinked (plug in)

**Electrical Rating**
**1A** 1 Amp / 15 VDC

### Caps (order separately)

[ ][ ][ ][ ][ ]

| INDEXED | COLOR |
|---|---|
| G001A | BLACK |
| G001G | GRAY |
| G0011 | IVORY |
| G001R | RED |

| RECTANGULAR | COLOR |
|---|---|
| G002A | BLACK |
| G002G | GRAY |
| G0021 | IVORY |
| G002R | RED |

| ROUND | COLOR |
|---|---|
| G003A | BLACK |
| G003G | GRAY |
| G0031 | IVORY |
| G003R | RED |

| SQUARE | COLOR |
|---|---|
| G004A | BLACK |
| G004G | GRAY |
| G0041 | IVORY |
| G004R | RED |

*Dimensions are shown: Inches (mm)*
*Specifications and dimensions subject to change*

## TERMINATION

**TS** STRAIGHT

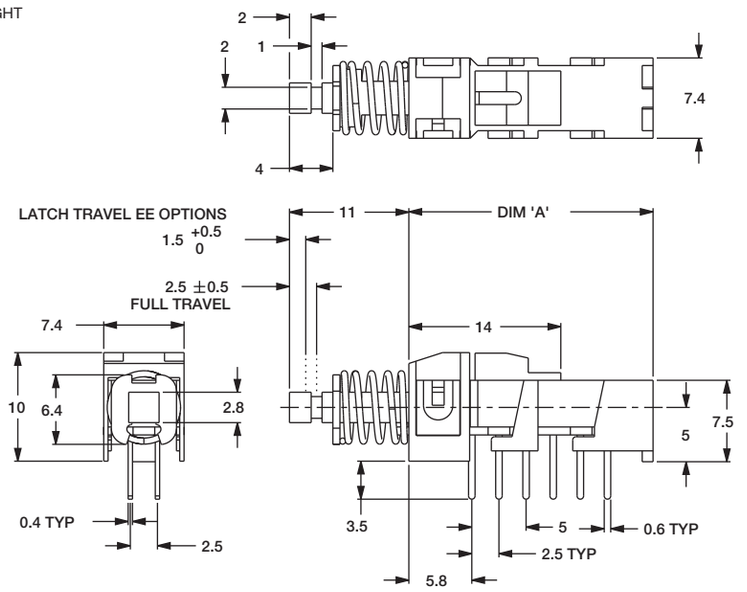


| POLES | MODEL NO. | DIM 'A' | ACTION |
|---|---|---|---|
| 4 | PHB4UEE1A | 22,5 | PUSH/PUSH |
| | PHB4U0A1A | 22,5 | MOMENTARY |
| 2 | PHB2UEE1A | 15,0 | PUSH/PUSH |
| | PHB2U0A1A | 15,0 | MOMENTARY |

**SN** KINKED (PLUG IN)

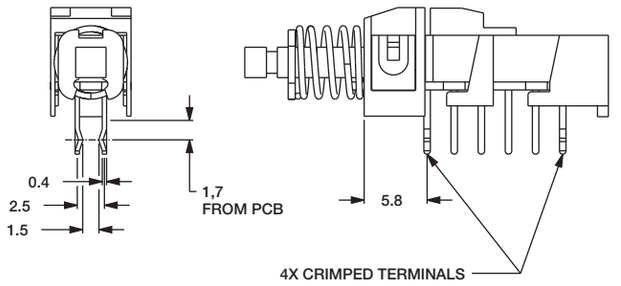


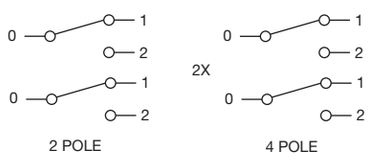


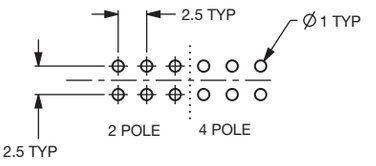


Third Angle Projection

*Dimensions are shown: mm*
*Specifications and dimensions subject to change*

# PHB Series
# Short Stroke Pushbutton Switches

## CAPS

### Indexed

**G001A** Black
**G001G** Gray
**G001I** Ivory
**G001R** Red

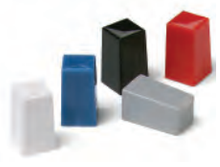

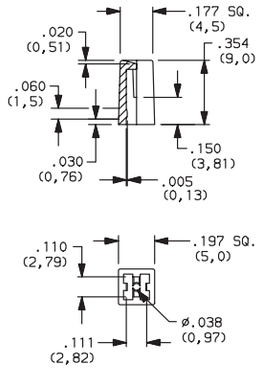


### Rectangular

**G002A** Black
**G002G** Gray
**G002I** Ivory
**G002R** Red

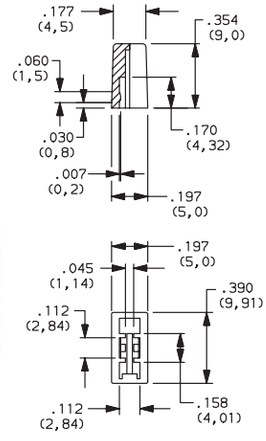


### Round

**G003A** Black
**G003G** Gray
**G003I** Ivory
**G003R** Red

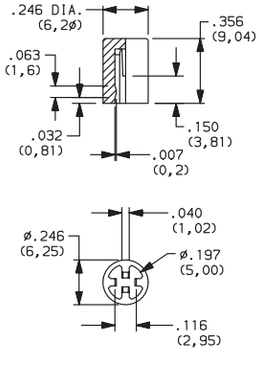


### Square

**G004A** Black
**G004G** Gray
**G004I** Ivory
**G004R** Red

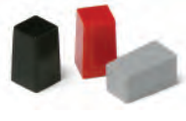

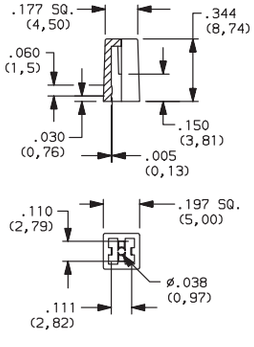


Third Angle Projection

*Dimensions are shown: Inches (mm)*
*Specifications and dimensions subject to change*

## Features/Benefits

- *Up to 10 poles per module*
- *Various contact terminals*
- *Various mounting & switch ganging configurations*
- *Mechanical indicator buttons*
- *RoHS compliant*

## Typical Applications

- *Audio selection*
- *Digital equipment interface*
- *Medical equipment interface*

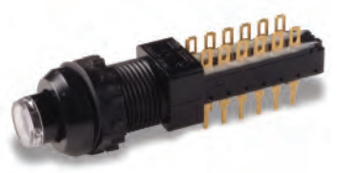

## Specifications

SWITCHING POWER: F module max. AC/DC: Silver: 50 VA/15W, Gold: 1 VA/300 mW.

SWITCHING VOLTAGE: F module max. AC/DC: Silver: 125/30V, Gold: 50/30 V.

SWITCHING CURRENT: F module max. AC/DC: Silver: 0.5A/0.5A, Gold: 0.04A/0.01A.

CARRYING CURRENT: Max at du = 20C: Silver: < 2A, Gold: <0.5A.

DIELECTRIC STRENGTH (50 Hz, 1 min.): Chassis/contact: ^1500V Between contacts: ^1500V.

OPERATING LIFE "OA/EE" (24V/200mA): >$10^5$ operations "GR": >3.5 x 104 operations.

CONTACT RESISTANCE: Initial: Typical %10 mΩ, max. 20 mΩ After operating life: %100 mΩ

INSULATION RESISTANCE: ^$10^9$ Ω between open contacts, ^$10^9$ Ω between chassis and contacts.

CAPACITANCE (at f = 10 kHz): %0.7 pF between 2 contacts.

TOTAL TRAVEL/LATCHING TRAVEL: 4.7mm/3.3mm (.185 inch/ .130 inch).

All models and options are RoHS compliant and compatible.

**NOTE:** All models and options are RoHS compliant and compatible.

**NOTE:** Specifications and materials listed above are for switches with standard options. For information on specific and custom switches, consult Customer Service Center.

TYPICAL F OPERATING FORCE: 2U: 6.5N (650 grams); 4U: 6.5N (650 grams); 6U: 7.5N (750 grams); 8U: 9.0N (900 grams); 10U: 9.0N (900 grams).

EUROPEAN TYPICAL SF OPERATING FORCE: 2U: 3.5N±0.5N (350 grams±100 grams); 4U: 5N±1N (500 grams±100 grams); 6U: 6.5N±1N (650 grams±100 grams); 8U: 9.0N±1N (900 grams±100 grams).

OPERATING TEMPERATURE RANGE: -40˚C to 70˚C.

## Materials

HOUSING: Polycarbonate UL 94V-0 or polyester UL 94V-0.

ACTUATOR: Polyester UL 94V-0.

MOVABLE CONTACTS: Bimetal brass, silver plated, gold plate over nickel.

STATIONARY CONTACTS & TERMINALS: Brass, silver plated, gold plated.

TERMINAL BOARD: Polyester UL 94V-0.

RETURN SPRING: Music wire.

TERMINAL SEAL: RTV adhesive sealant.

CHASSIS: Steel.

LOCKOUT PIN: Steel.

BLOCKERS: Steel.

## Build-A-Switch

To order, simply select desired option from each category and place in the appropriate box. Available options are shown and described on pages A-88 thru A-95. For additional options not shown in catalog, consult Customer Service Center.

If requesting only a switch, select either a North American or European switch as noted below. Chassis and buttons are sold separately. If multiple stations are selected, we will assume all switches are the same unless noted otherwise.

### North American Order Code - Switch Only

**Designation**
- **F** F Series
- **FLT** Light touch F series
- **ZF** Central mounted F series

**Contact Arrangement**
- **2U** 2PDT
- **4U** 4PDT
- **6U** 6PDT
- **8U** SPDT
- **10U** 10PDT

**Mechanical Function**
- **OA** Momentary
- **EE** Alternate (push-push)
- **GR** Interlock
- **AOR** Central release
- **OASP** Momentary with lockout
- **GRSP** Interlock with lockout

**Terminal Sealing**
- **(NONE)** None
- **TB** Top/bottom

**Terminal Style**
- **(NONE)** Solder lugs & PC pins
- **01A** Cut solder lugs
- **01B** Cut PC pins, for other configurations, consult factory

**Electrical Function**
- **(NONE)** BBM Break-Before-Make
- **M** MBB (special) Make-Before-Break

**Contact Material**
- **(NONE)** Silver, AG
- **AU** Gold

**Dress nut***
*Central mounted F series only

- **(NONE)** No dress nut
- **B** Black
- **C** Chrome

# F Series
# Pushbutton Switches

## European Order Code - Switch Only

**Designation**
- **SF** F Series
- **ZF** Central mounted F series

**Contact Arrangement**
- **2U** 2PDT
- **4U** 4PDT
- **6U** 6PDT
- **8U** SPDT

**Mechanical Function**
- **OA** Momentary
- **EE** Alternate (push-push)
- **GR** Interlock

**Terminal Style**
- **(NONE)** Solder lugs & PC pins
- **LB** Cut solder lugs
- **PB** Cut PC pins, for other configurations, consult factory

**Electrical Function**
- **(NONE)** BBM

**Contact Material**
- **(NONE)** Silver, AG
- **P** Gold

**Dress nut***
*Central mounted F series only

- **(NONE)** No dress nut
- **B** Black
- **C** Chrome

*Minimum order quantities apply.

## Order Code - Buttons

### Solid Buttons

**Style**
- **F01** FMR
- **F02** FG*
- **F12** FSC
- **F13** FSD
- **F14** FU12
- **F15** FSB
- **F16** FE
- **F19** FA
- **F21** F001

**Button Color**
- **01** Black
- **02** White
- **03** Red
- **04** Light gray

*Button options for central mounting configurations, use 'FG' for central mount with chrome dress nut, use 'FA200' for central mount with black dress nut.

### Mechanical Indicator Buttons

**Style**
- **F01** FA100
- **F02** FA101
- **F07** FA120
- **F08** FA201
- **F11** FA200*

**Shell Color**
- **01** Black

**Out Position Color**
- **01** Black

**In Position Color**
- **02** White
- **06** Yellow
- **07** Blue
- **08** Green
- **12** Orange

**BUTTON REMOVAL**

A button of a push-push switch should only be removed in the "OFF" non-latching position.

## Order Code - Chassis

To order a switch with chassis, create the switch part number listed above and add the Chassis part number configurator information at the end of the part number.

Note: We do not guarantee or recommend interlocking beyond 10 stations.

C

**No. of Stations**
- **01 thru 23** Comes with standard .094 (2,4mm) mounting holes Note: Single station chassis available with special mounting configurations, consult factory.

**Spacing between Stations**
- **00** Single station
- **10** 10mm
- **12.5** 12.5mm
- **15** 15mm
- **17.5** 17.5mm
- **20** 20mm

**Special Acknowledgements**
See note

*Minimum order quantities apply.

## SWITCHES WITH STANDARD OPTIONS

### F2UEE

| CONTACT ARRANGEMENT | LENGTH DIM 'L' |
|---|---|
| 2U | 0.827 (21,00) |
| 4U | 1.300 (33,00) |
| 6U | 1.770 (45,00) |
| 8U | 2.240 (57,00) |
| 10U | 2.720 (69,00) |

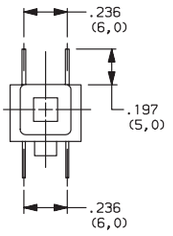


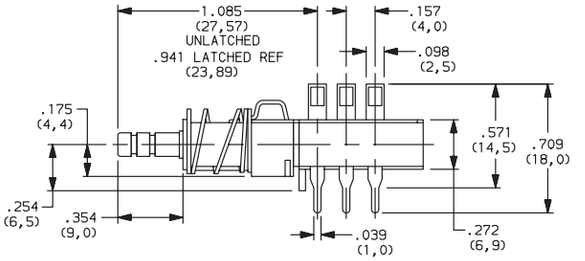


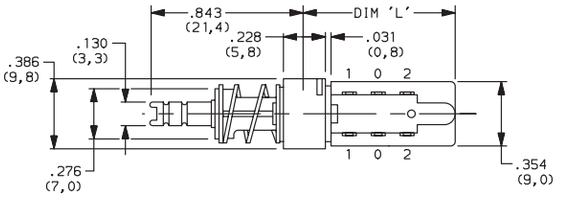


### ZF2UEEBF11010108

| CONTACT ARRANGEMENT | LENGTH DIM 'L' |
|---|---|
| 2U | 0.827 (21,00) |
| 4U | 1.300 (33,00) |
| 6U | 1.770 (45,00) |
| 8U | 2.240 (57,00) |
| 10U | 2.720 (69,00) |

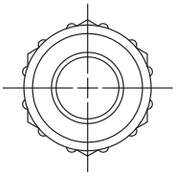

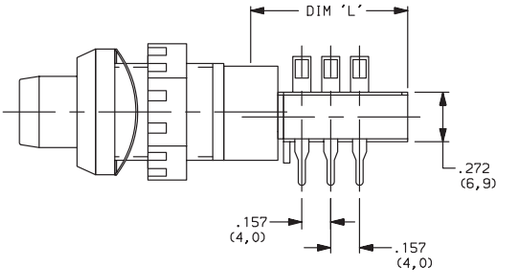


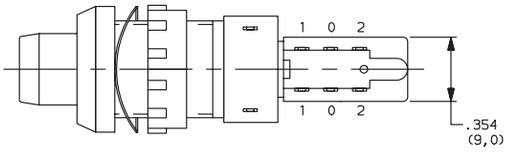


## DESIGNATION

**Designation, North America**

**F** F Series
**FLT** Light touch F series
**ZF** Central mounted F series

**Designation, Europe**

**SF** F Series
**ZF** Central mounted F series

Third Angle Projection

*Dimensions are shown: Inches (mm)*
*Specifications and dimensions subject to change*

# F Series
# Pushbutton Switches

## CONTACT ARRANGEMENT

| OPTION CODE | NO. OF POLES | SCHEMATIC |
|---|---|---|
| 2U | 2PDT | |
| 4U | 4PDT | 2X |
| 6U | 6PDT | 3X |
| 8U | 8PDT | 4X |
| 10U | 10PDT | 5X |

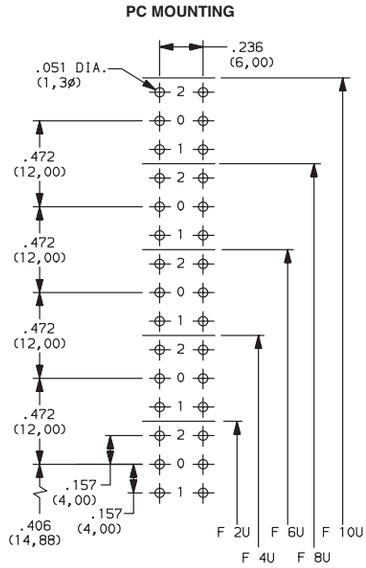


## MECHANICAL FUNCTION

**North America**

| OPTION CODE | FUNCTION |
|---|---|
| OA | Momentary |
| EE | Alternate (push-push) |
| GR | Interlock |
| AOR | Central release |
| OASP | Momentary with lockout |
| GRSP | Interlock with lockout |

**Europe**

| OPTION CODE | FUNCTION |
|---|---|
| OA | Momentary |
| EE | Alternate (push-push) |
| GR | Interlock |

## TERMINAL SEALING

**(NONE)** NO SEAL

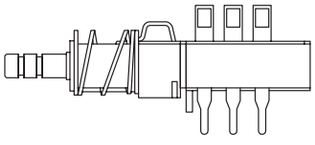

F2UEE shown in example above.

**TB** TOP & BOTTOM

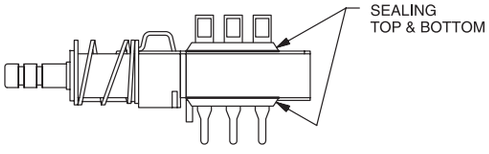


**NOTE:** Available for North America only

Third Angle Projection

*Dimensions are shown: Inches (mm)*
*Specifications and dimensions subject to change*

## TERMINAL STYLE

**(NONE)** SOLDER LUGS & PC PINS

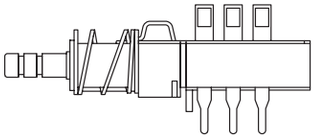

**01A** CUT SOLDER LUGS (North America)

**LB** CUT SOLDER LUGS (Europe)

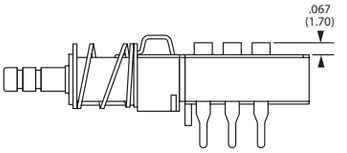


**01B** CUT PC PINS (North America)

**PB** CUT PC PINS (Europe)

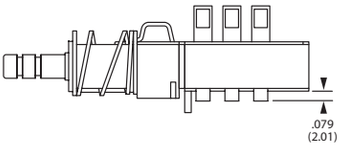


## ELECTRICAL FUNCTION

| OPTION CODE | FUNCTION |
|---|---|
| (NONE) | BBM Non-shorting |
| M | MBB Shorting (North America only) |

## CONTACT MATERIAL

| NORTH AMERICA OPTION CODE | EUROPE OPTION CODE | RoHS COMPLIANT * | RoHS COMPATIBLE * | MATERIAL | RATING |
|---|---|---|---|---|---|
| (NONE) | (NONE) | YES | YES | SILVER, AG | 50 VA/15 W; 125/30 V; 0.5/0.5 A |
| AU | P | YES | YES | GOLD | 1 VA/300mW; 50/30 V; 0.04 A/0.01 A |

* Note: See Technical Data section of this catalog for RoHS compliant and compatible definitions and specifications.

## DRESS NUT

**(NONE)** NO DRESS NUT FOR F & F/LT DESIGNATIONS

**B** BLACK

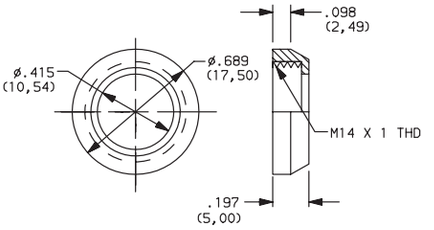


PANEL CUTOUT

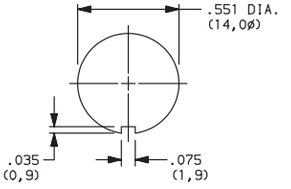


**NOTE:** Available with ZF designation and FA200 buttons.

**C** CHROME

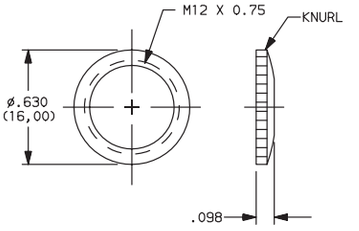


PANEL CUTOUT

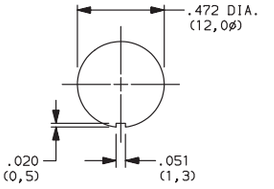


**NOTE:** Available with ZF designation and FG button.

Third Angle Projection

*Dimensions are shown: Inches (mm)*
*Specifications and dimensions subject to change*

# F Series
# Pushbutton Switches

## SOLID BUTTON

COLOR
STYLE

## STYLE

### F01 FMR

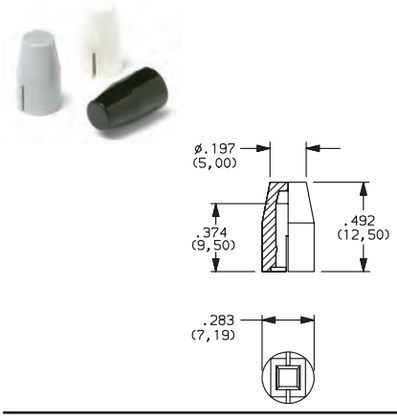


### F02 FG

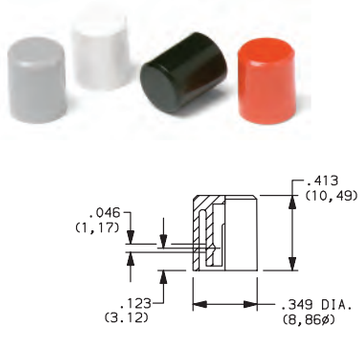


### F12 FSC

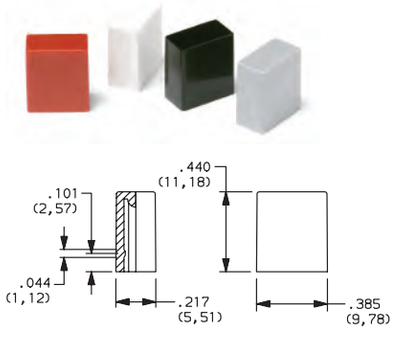


### F13 FSD

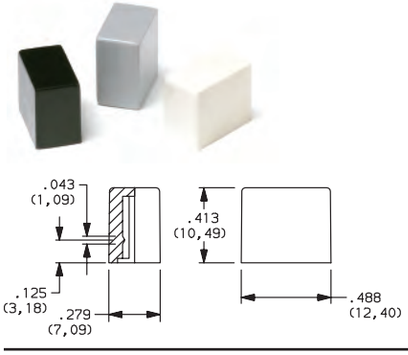


### F14 FU12

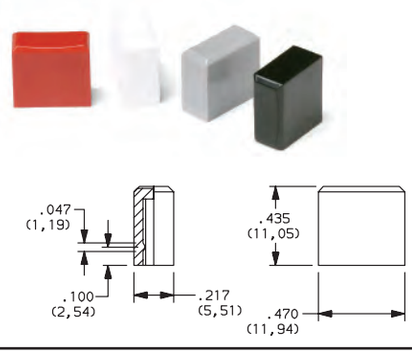


### F15 FSB

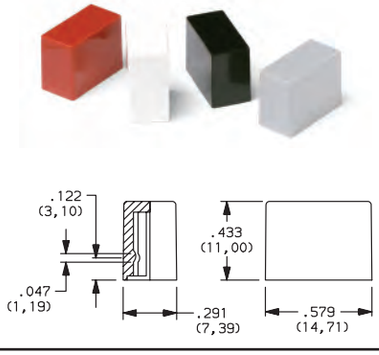


### F16 FE

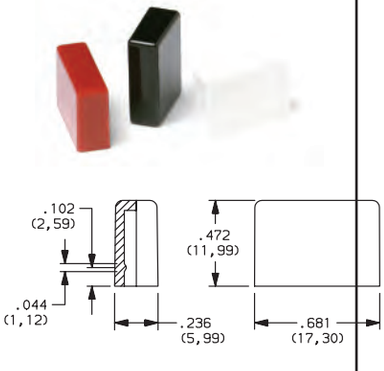


### F19 FA

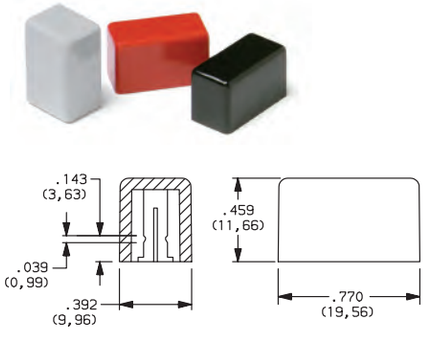


### F21 F001

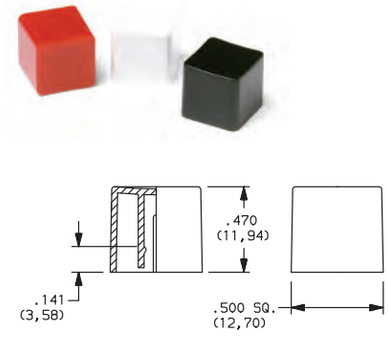


| OPTION CODE | COLOR |
|---|---|
| 01 | BLACK |
| 02 | WHITE |
| 03 | RED |
| 04 | LT. GRAY |

*Dimensions are shown: Inches (mm)*
*Specifications and dimensions subject to change*

## MECHANICAL BUTTON

SHELL COLOR | IN POSITION COLOR
STYLE | OUT POSITION COLOR

### STYLE

**F01** FA100

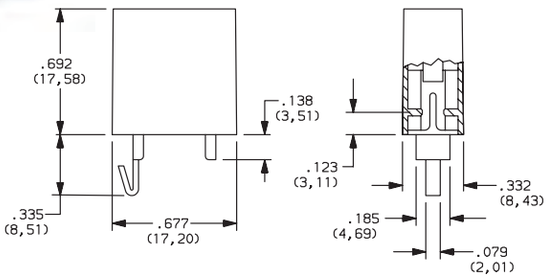


**F02** FA101

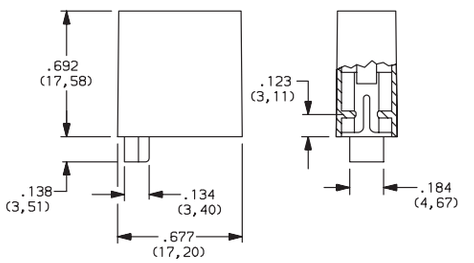


**F07** FA120

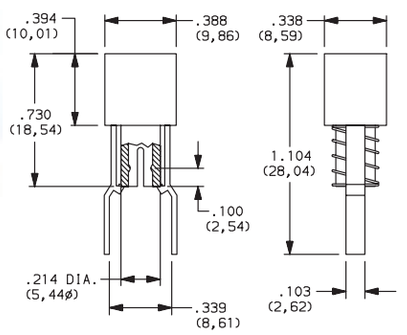


**F08** FA201

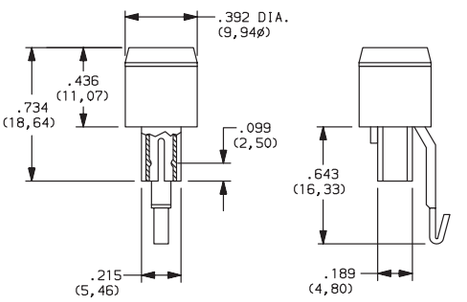


**F11** FA200

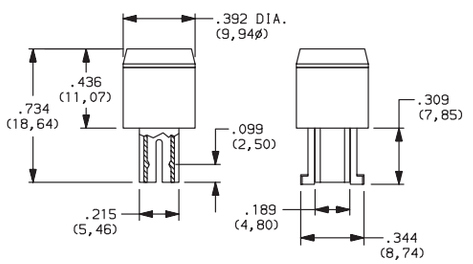


### SHELL COLOR

**01** BLACK

### OUT POSITION COLOR

**01** BLACK

### IN POSITION COLOR

| OPTION CODE | COLOR |
|---|---|
| 02 | WHITE |
| 06 | YELLOW |
| 07 | BLUE |
| 08 | GREEN |
| 12 | ORANGE |

*Dimensions are shown: Inches (mm)*
*Specifications and dimensions subject to change*

# F Series
# Pushbutton Switches

## CHASSIS

SPACING

NO. OF STATIONS

## NUMBER OF STATIONS

**C00 Thru C10** Comes with standard 0.094 (2,44mm) mounting holes

**NOTE:** Single station chassis available with mounting configurations, consult factory.

## SPACING

**00** SINGLE STATION

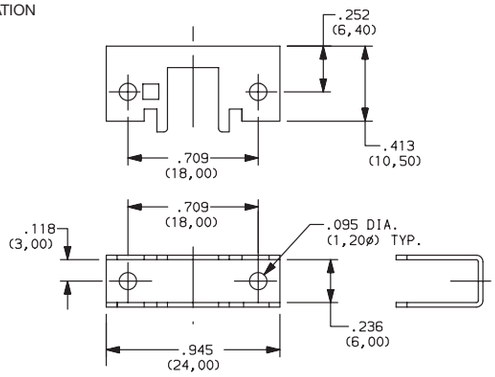


**10** 10mm

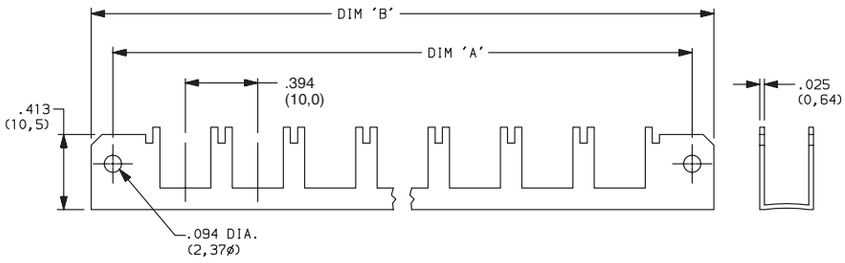


| No. of Stations | Dim. 'A' | Dim. 'B' | Tolerance |
|---|---|---|---|
| 2 | 1.182 (30,02) | 1.418 (36,02) | 0.005 |
| 3 | 1.575 (40,01) | 1.811 (46,00) | 0.010 |
| 4 | 1.969 (50,01) | 2.205 (56,01) | 0.010 |
| 5 | 2.363 (60,02) | 2.599 (66,01) | 0.010 |
| 6 | 2.757 (70,03) | 2.993 (76,02) | 0.015 |
| 7 | 3.150 (80,01) | 3.386 (86,00) | 0.015 |
| 8 | 3.544 (90,02) | 3.780 (96,01) | 0.015 |
| 9 | 3.938 (100,03) | 4.174 (106,02) | 0.015 |
| 10 | 4.331 (110,01) | 4.567 (116,00) | 0.015 |

**12.5** 12.5mm

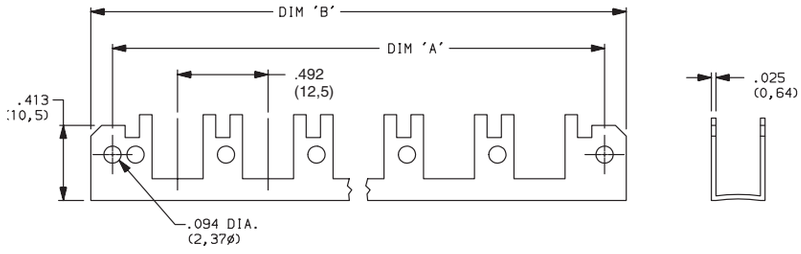


| No. of Stations | Dim. 'A' | Dim. 'B' | Tolerance |
|---|---|---|---|
| 2 | 1.200 (30,48) | 1.436 (36,47) | 0.005 |
| 3 | 1.692 (42,98) | 1.928 (48,97) | 0.010 |
| 4 | 2.184 (55,47) | 2.420 (61,47) | 0.010 |
| 5 | 2.676 (67,97) | 2.912 (73,96) | 0.010 |
| 6 | 3.169 (80,49) | 3.405 (86,49) | 0.015 |
| 7 | 3.661 (92,99) | 3.897 (98,98) | 0.015 |
| 8 | 4.153 (105,49) | 4.389 (111,48) | 0.015 |
| 9 | 4.645 (117,98) | 4.881 (123,98) | 0.015 |
| 10 | 5.137 (130,48) | 5.373 (136,47) | 0.015 |

Third Angle Projection

*Dimensions are shown: Inches (mm)*
*Specifications and dimensions subject to change*

## CHASSIS

SPACING

NO. OF STATIONS

## SPACING

### 15 15mm

| No. of Stations | Dim. 'A' | Dim. 'B' | Tolerance |
|---|---|---|---|
| 2 | 1.374 (34,90) | 1.615 (41,02) | 0.005 |
| 3 | 1.969 (50,01) | 2.205 (56,01) | 0.010 |
| 4 | 2.560 (65,02) | 2.796 (71,02) | 0.010 |
| 5 | 3.150 (80,01) | 3.386 (86,00) | 0.010 |
| 6 | 3.741 (95,02) | 3.977 (101,02) | 0.015 |
| 7 | 4.332 (110,03) | 4.568 (116,03) | 0.015 |
| 8 | 4.922 (125,02) | 5.158 (131,01) | 0.015 |
| 9 | 5.513 (140,03) | 5.749 (146,02) | 0.015 |
| 10 | 6.103 (155,02) | 6.339 (161,01) | 0.015 |

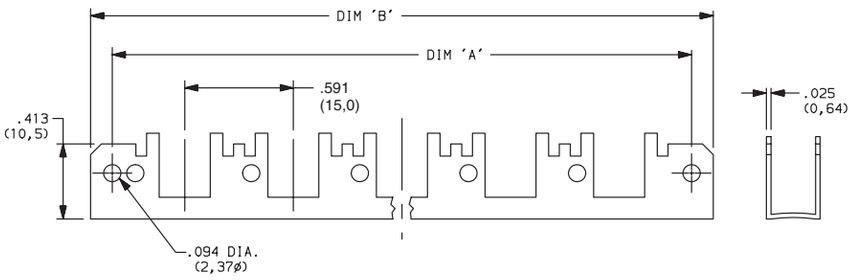


### 17.5 17.5mm

| No. of Stations | Dim. 'A' | Dim. 'B' | Tolerance |
|---|---|---|---|
| 2 | 1.477 (37,52) | 1.713 (43,51) | 0.005 |
| 3 | 2.166 (55,02) | 2.402 (61,01) | 0.010 |
| 4 | 2.855 (75,52) | 3.091 (78.51) | 0.010 |
| 5 | 3.544 (90,02) | 3.780 (96,01) | 0.010 |
| 6 | 4.233 (107,52) | 4.469 (113,51) | 0.015 |
| 7 | 4.922 (125,02) | 5.158 (131,01) | 0.015 |
| 8 | 5.611 (142,52) | 5.847 (148.51) | 0.015 |
| 9 | 6.300 (160,02) | 6.536 (166,01) | 0.015 |
| 10 | 6.989 (177,52) | 7.225 (183,52) | 0.015 |

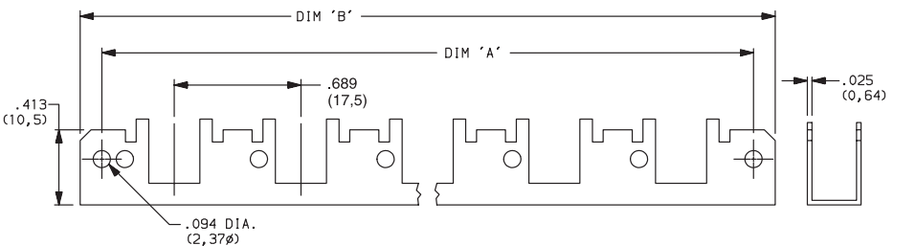


### 20 20mm

| No. of Stations | Dim. 'A' | Dim. 'B' | Tolerance |
|---|---|---|---|
| 2 | 1.575 (40,01) | 1.811 (46,00) | 0.005 |
| 3 | 2.363 (60,02) | 2.599 (66,01) | 0.010 |
| 4 | 3.150 (80,01) | 3.386 (86,00) | 0.010 |
| 5 | 3.938 (100,03) | 4.174 (106,02) | 0.010 |
| 6 | 4.725 (120,02) | 4.961 (126,01) | 0.015 |
| 7 | 5.512 (140,00) | 5.748 (146,00) | 0.015 |
| 8 | 6.300 (160,02) | 6.536 (166,01) | 0.015 |
| 9 | 7.087 (180,01) | 7.323 (186,00) | 0.015 |
| 10 | 7.875 (200,03) | 8.111 (206,02) | 0.015 |

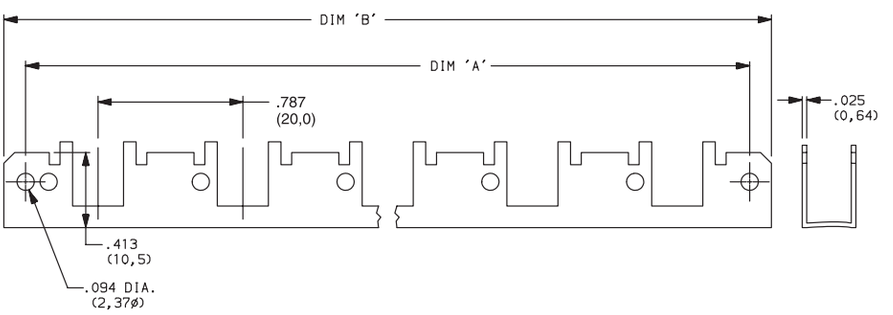


Third Angle Projection

*Dimensions are shown: Inches (mm)*
*Specifications and dimensions subject to change*

# NE-18 Series
# Mains / Power Switches

### *Features/Benefits*

- ***Chassis or panel mount***
- ***Various buttons***
- ***Various contact configurations***
- ***RoHS compliant***

### *Typical Applications*

- ***Mains/power switching***
- ***Consumer electronics***
- ***Audio equipment***
- ***Digital products***

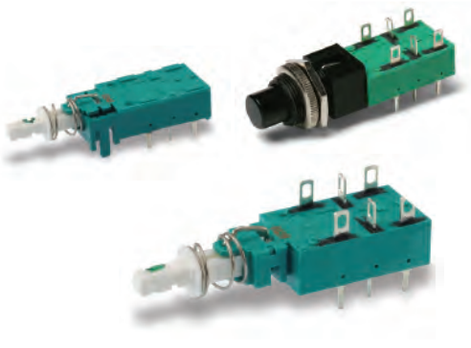

**UL61058-1**

## Specifications

ELECTRICAL RATING:

NE18 Series:

8A GP, 125 VAC, 50/60 Hz, 1E4, T70

6A GP, 250 VAC, 50/60 Hz, 1E4, T70

6(4)A RM, 250 VAC, 50/60 Hz, 1E4, T70

6/48A RC, 250 VAC, 50/60 Hz, 1E4, T70

1RA, 100 VDC, 1E4, T70

8RA, 30VDC, 1E4, T70

NE18CTII Series:

4A GP, 250 VAC, 50/60 Hz, 1E4, T70

4/48A RC, 250 VAC, 50/60 Hz, 1E4, T70

1RA, 100 VDC, 1E4, T70

4RA, 30VDC, 1E4, T70

DIELECTRIC STRENGTH (50 Hz, 1 min.): 2000 V

OPERATING LIFE AT MAX. LOAD AND AT MAX. INRUSH CURRENT: ^$10^4$ operations[5])

CONTACT RESISTANCE: Initial: 50mΩ; After $10^4$ operations: 70mΩ.

INSULATION RESISTANCE: ^$10^{12}$ Ωchassis – nearest contact; ^$10^{12}$ Ωmains contact – mains contact; ^$10^{12}$ Ωmains contact – mains contact after $10^4$ operations.

LOW VOLTAGE CONTACT:

SWITCHING POWER MAX.: 12W

SWITCHING VOLTAGE MAX.: 24V

SWITCHING CURRENT MAX.: 0.5A

TOTAL TRAVEL: 4.7mm (.185 inch)

LATCHING TRAVEL: 3.3mm (.130 inch)

OPERATING FORCE: Without auxiliary low voltage contacts: NE18: 7N (700 grams); NE18CTII: 9.5N (950 grams).

With auxiliary low voltage contacts: NE18: 8N (800 grams); NE18CTII: 11N (1100 grams).

SEALING: Dust proof.

## Materials

HOUSING, ACTUATOR & TERMINAL BOARD: Thermoplastic polyester (UL 94V-0).

MOVABLE CONTACT: Silver nickel alloy, silver plated.

FIXED CONTACTS: Silver nickel alloy, silver plated.

COMMON CONTACTS & TERMINALS: Copper alloy, silver plated.

RETURN SPRING: Music wire.

**NOTE:** All models arer RoHS compliant and compatible.

**NOTE:** Specifications and materials listed above are for switches with standard options. For information on specific and custom switches, consult Customer Service Center.

## Build-A-Switch

To order, simply select desired option from each category and place in the appropriate box. Available options are shown and described on pages A-97 thru A-104. For additional options not shown in catalog, consult Customer Service Center.

If requesting only a switch, select the switch as noted below. Buttons are sold separately.

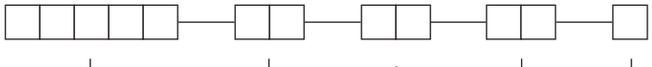

**Designation**
**NE18** NE1B
**ZNE18** Cental mounted NE1B

**Contact Arrangement**
NE18 code # - see list

**Mechanical Function**
**OA** Momentary
**EE** Alternate (push-push)

**Single Station Chassis**
**01** With .094 mounting holes
**(NONE)** No chassis
**02** With 4-40 tapped mounting holes
**03** Special chassis (consult factory)

**Dress nut***
*Central mounted
ZNE18 series only
**(NONE)** No dress nut
**B** Black
**C** Chrome

*Dimensions are shown: Inches (mm)*
*Specifications and dimensions subject to change*

## Order Code - Buttons

### Solid Buttons

**Style**
- **F01** FMR
- **F02** FG*
- **F12** FSC
- **F13** FSD
- **F14** FU12
- **F15** FSB
- **F16** FE
- **F19** FA
- **F21** F001

**Button Color**
- **01** Black
- **02** White
- **03** Red
- **04** Light gray

### Mechanical Indicator Buttons

**Style**
- **F01** FA100
- **F02** FA101
- **F07** FA120
- **F08** FA201
- **F11** FA200*

**Shell Color**
- **01** Black

**Out Position Color**
- **01** Black

**In Position Color**
- **02** White
- **06** Yellow
- **07** Blue
- **08** Green
- **12** Orange

*Button options for central mounting configurations, use 'FG' for central mount with chrome dress nut, use 'FA200' for central mount with black dress nut.

**BUTTON REMOVAL**

A button of a push-push switch should only be removed in the "OFF" non-latching position.

## DESIGNATION & SWITCHES WITH STANDARD OPTIONS

### NE1838EE

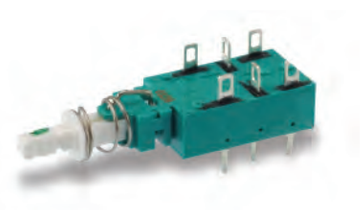

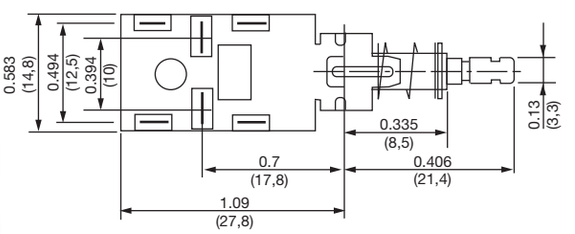


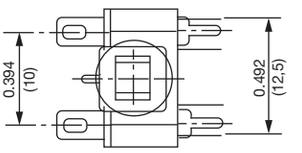


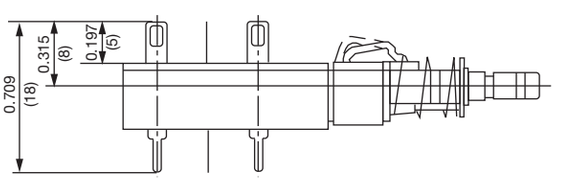


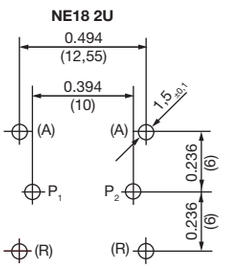


Third Angle Projection

*Dimensions are shown: Inches (mm)*
*Specifications and dimensions subject to change*

# NE-18 Series
# Mains / Power Switches

## DESIGNATION & SWITCHES WITH STANDARD OPTIONS

### NE1839EE

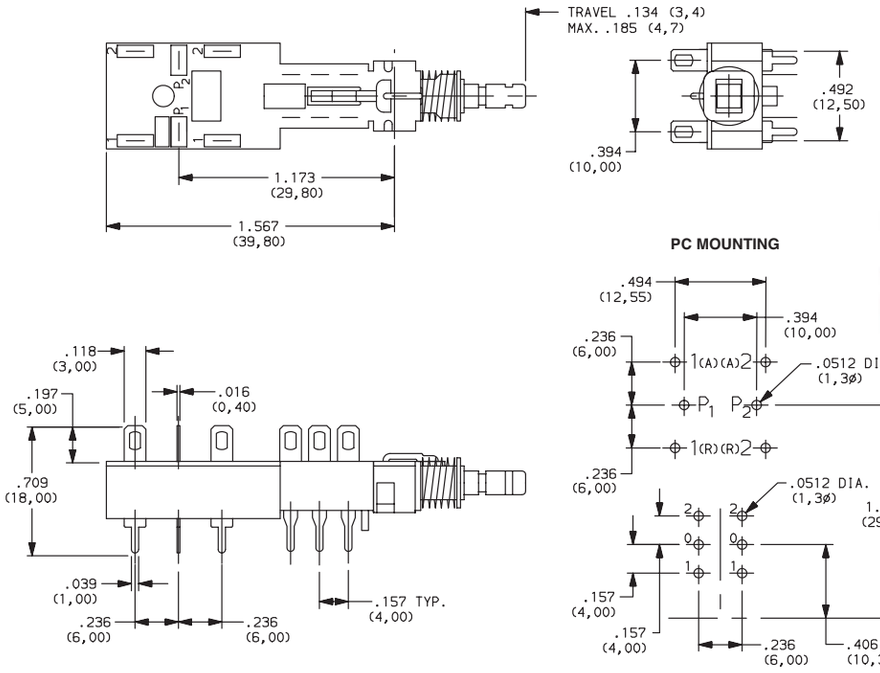


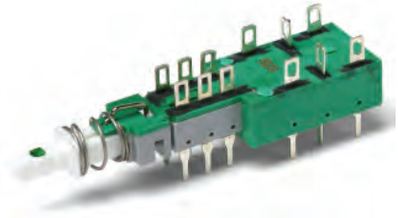

### NE1846EE

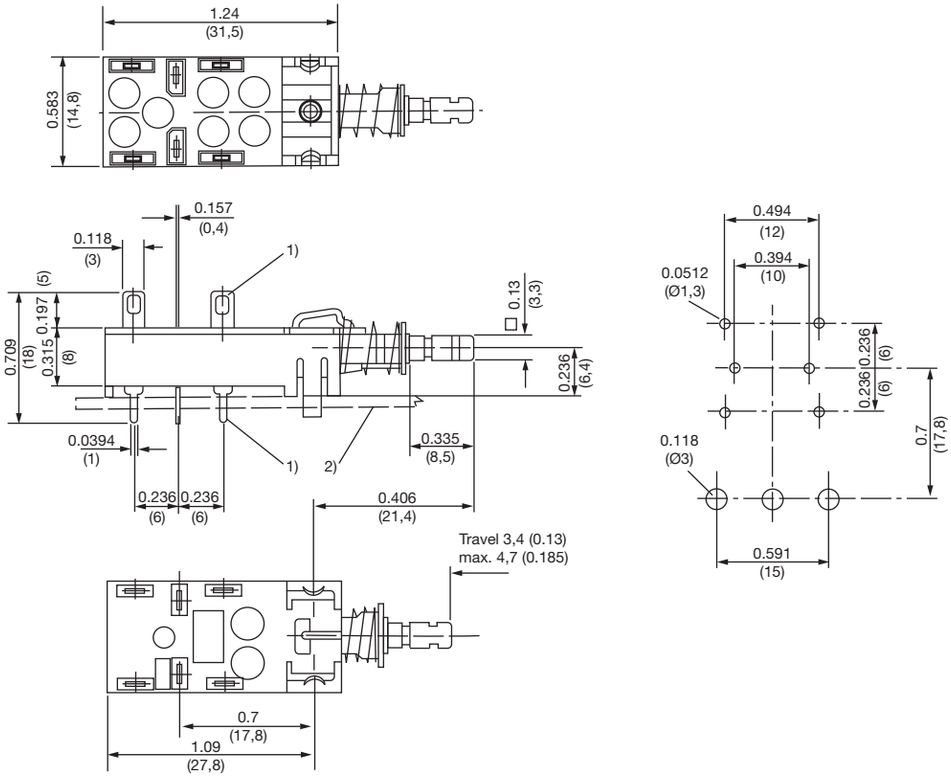


Third Angle Projection

*Dimensions are shown: Inches (mm)*
*Specifications and dimensions subject to change*

## DESIGNATION & SWITCHES WITH STANDARD OPTIONS

**ZNE1838EECF0201**

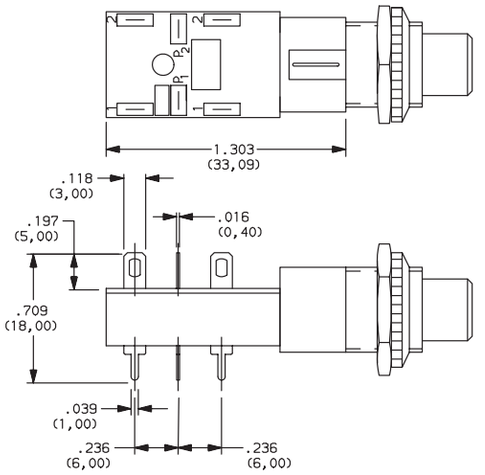


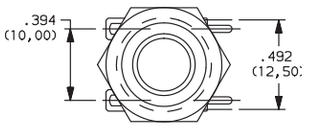


**PC MOUNTING**

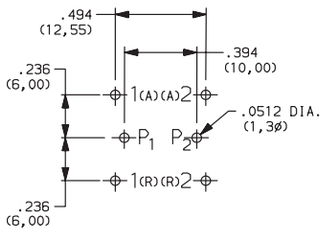


Third Angle Projection

*Dimensions are shown: Inches (mm)*
*Specifications and dimensions subject to change*

# NE-18 Series
# Mains / Power Switches

## CONTACT ARRANGEMENT

| OPTION CODE Contact capacity and availability | STYLE | ELECTRICAL CIRCUIT |
|---|---|---|
| 37 | NE18 — 2AX | DPST |
| 38 | NE18 — 2UX | DPDT |
| 51 | 2U + NE18 — 2AX | DPST* |
| 52 (4A/64) | NE18CTII — 2AX | DPST |
| 39 | 2U + NE18 — 2UX | DPDT* |
| 41 | NE18 — 2AP | DPST |
| 42 | NE18 — 2UP | DPDT |
| 43 | NE18 — 2AW | DPST |
| 44 | NE18 — 2UW | DPDT |
| 45 | NE18 — 2ASX | DPST |

| OPTION CODE Contact capacity and availability | STYLE | ELECTRICAL CIRCUIT |
|---|---|---|
| 46 | NE18 — 2USX | DPDT |
| 47 | NE18 — 2ASP | DPST |
| 48 | NE18 — 2USP | DPDT |
| 49 | NE18 — 2ASW | DPST |
| 50 | NE18 — 2USW | DPDT |
| 53 (4A/64) | 2U + NE18CTII — 2AX | DPST |
| 54 | 2U + NE18 — 2AW | DPST |
| 55 | 2U + NE18 — 2AP | DPST |
| 56 | 2U + NE18 — 2UW | DPDT |
| 57 | 2U + NE18 — 2UP | DPDT |

* 2U + Denotes auxiliary set of low current contacts DPDT
2A = DPST
2U = DPDT
S = Snap-in mounting
X = Solder lug/PC pins
W = Solder lugs only
P = PC pins only

NOTES
1. Contact plating is silver on all Power Switches.
2. The electrical function is Break Before Make (BBM) on all Power Switches.
3. The terminals will be epoxy sealed.

| TYPE | POSSIBLE CONTACT ARRANGEMENT | | CONTACT SPACING | PROTECTION CLASS (CEE 24) | APPROVALS |
|---|---|---|---|---|---|
| | POWER CONTACTS[1] | AUXILIARY CONTACTS | | | |
| NE18 | 2A[2] | 2U | > 3mm (.118 inch) | II | UL61058-1 |
| NE18 | 2A[2]<br>2U | 2U | > 3mm (.118 inch) | I | UL61058-1 |
| NE18CTII | 2A[2] | 2U | > 3mm (.118 inch) | II | UL61058-1 |

1) A = make contact, U = changeover contact
2) With 2A mains contacts: Mounting only by PC pins is not sufficient.

## MECHANICAL FUNCTION

| OPTION CODE | FUNCTION |
|---|---|
| OA | Momentary |
| EE | Alternate (push-push) |

Third Angle Projection

*Dimensions are shown: Inches (mm)*
*Specifications and dimensions subject to change*

## SINGLE STATION CHASSIS

**01** WITH .094 MOUNTING HOLES

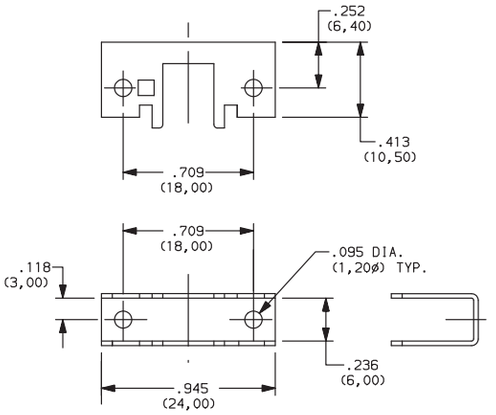


**(NONE)** NO CHASSIS

**02** WITH 4-40 TAPPED MOUNTING HOLES

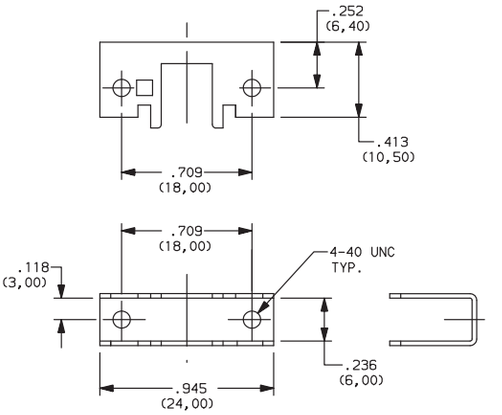


**03** SPECIAL CHASSIS (CONSULT FACTORY)

## DRESS NUT

**(NONE)** NO DRESS NUT

**B** BLACK

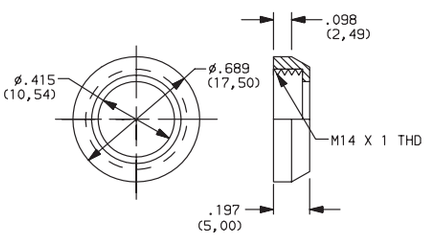


**PANEL CUTOUT**

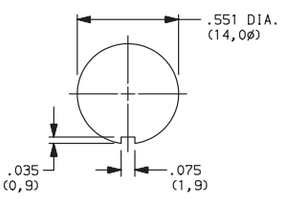


**NOTE:** Available with ZNE18 designation and FA200 buttons.

**C** CHROME

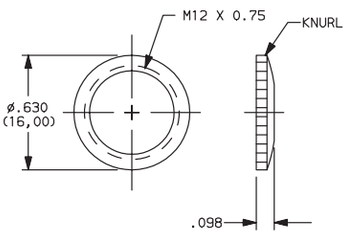


**PANEL CUTOUT**

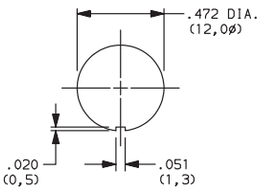


**NOTE:** Available with ZNE18 designation and FG button.

Third Angle Projection

*Dimensions are shown: Inches (mm)*
*Specifications and dimensions subject to change*

# NE-18 Series
# Mains / Power Switches

## SOLID BUTTON

### STYLE

**F01** FMR

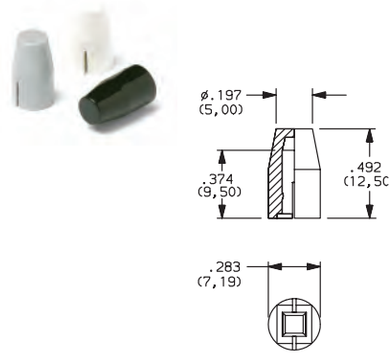


**F02** FG

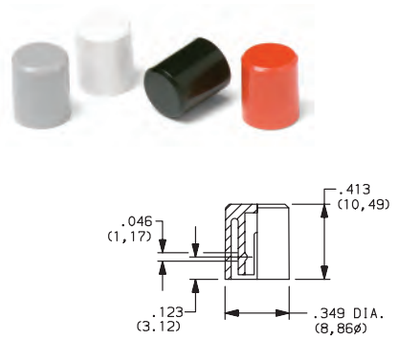


**F12** FSC

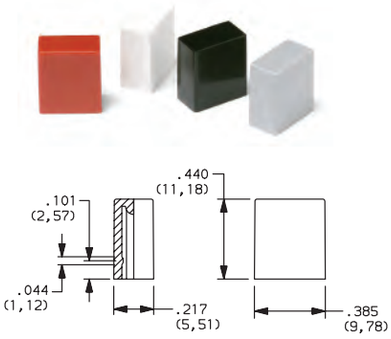


**F13** FSD

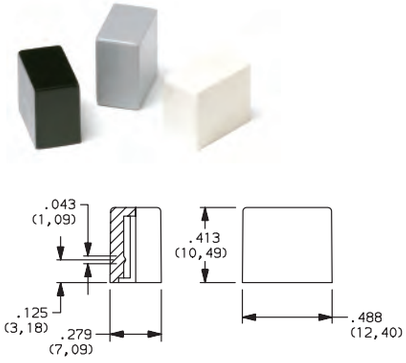


**F14** FU12

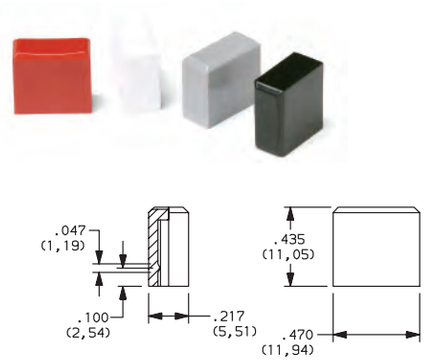


**F15** FSB

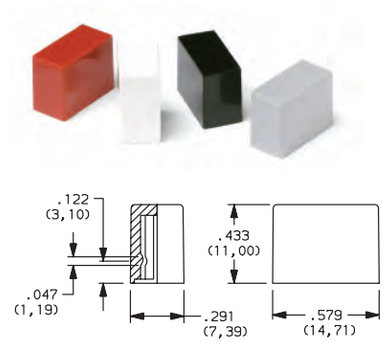


**F16** FE

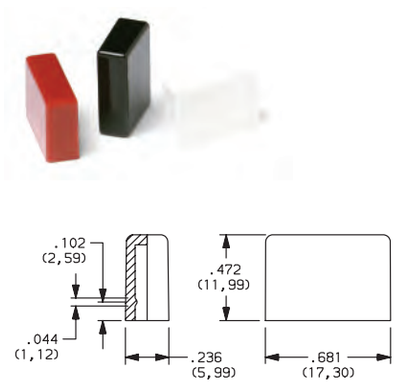


**F19** FA

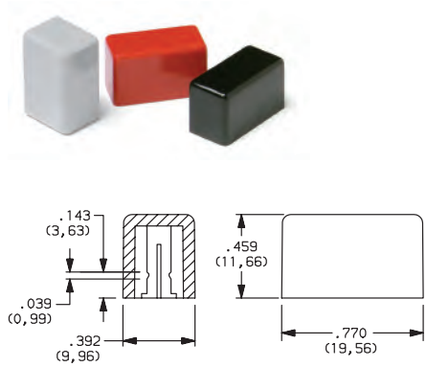


| OPTION CODE | COLOR |
|---|---|
| 01 | BLACK |
| 02 | WHITE |
| 03 | RED |
| 04 | LT. GRAY |

Third Angle Projection

*Dimensions are shown: Inches (mm)*
*Specifications and dimensions subject to change*

## SOLID BUTTON

COLOR
STYLE

### STYLE

**F21** F001

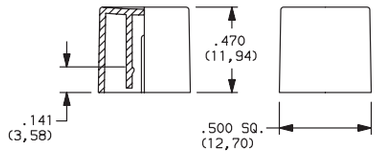


| OPTION CODE | COLOR |
|---|---|
| 01 | BLACK |
| 02 | WHITE |
| 03 | RED |
| 04 | LT. GRAY |
| 09 | BLACK/CHROME (F03,F06 & F07 buttons only |

## MECHANICAL BUTTON

SHELL COLOR
IN POSITION COLOR
STYLE
OUT POSITION COLOR

### STYLE

**F01** FA100

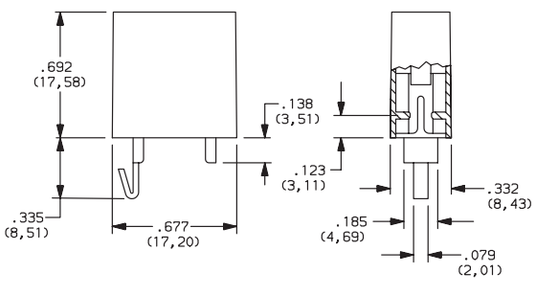


**F02** FA101

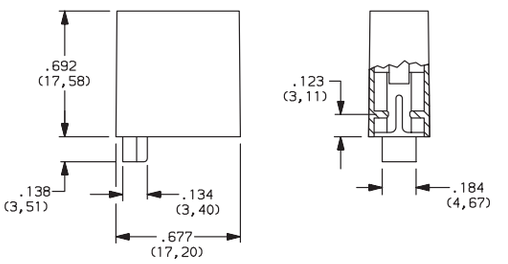


Third Angle Projection

*Dimensions are shown: Inches (mm)*
*Specifications and dimensions subject to change*

# NE-18 Series
# Mains / Power Switches

## MECHANICAL BUTTON

SHELL COLOR — IN POSITION COLOR
STYLE — OUT POSITION COLOR

## STYLE

**F08** FA201

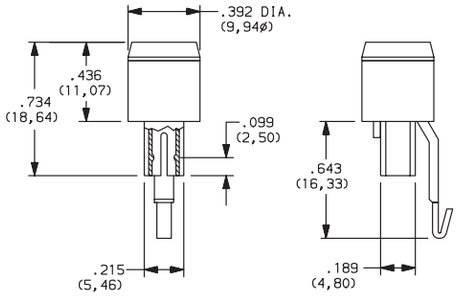


**F11** FA200

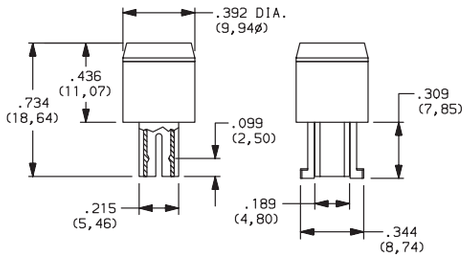


## SHELL COLOR

**01** BLACK

## OUT POSITION COLOR

**01** BLACK

## IN POSITION COLOR

| OPTION CODE | COLOR |
|---|---|
| 02 | WHITE |
| 06 | YELLOW |
| 07 | BLUE |
| 08 | GREEN |
| 12 | ORANGE |

Third Angle Projection

*Dimensions are shown: Inches (mm)*
*Specifications and dimensions subject to change*

# FP Series
# Sealed Ultra Miniature Pushbutton Switches

## *Features/Benefits*

- ***Vertical and right angle mount***
- ***Extended operating life 50,000 cycles***
- ***Optional caps***
- ***Sealed against soldering and cleaning processes***
- ***RoHS compliant***

## *Typical Applications*

- ***Networking equipment***
- ***Modems***
- ***Reset functions***
- ***Instrumentation***

## Specifications

CONTACT RATING: Max. 0.4 VA (28 V DC or V AC).
ELECTRICAL LIFE: 50,000 cycles.
CONTACT RESISTANCE: (10mA @ 2 V DC) 80 mΩ max. initial.
INSULATION RESISTANCE: 500MΩ min. @ 500 V DC - 1 minute.
OPERATING TEMPERATURE: –20°C to 80°C.
SOLDERABILITY: Per MIL-STD-202F method 208D, or EIA RS-186E method 9.
PACKAGING:
Tray pack - 100 switches per tray.
Caps (optional) - Bulk bag; 100 caps per bag.

**NOTE:** Specifications and materials listed above are for switches with standard options. For information on specific and custom switches, consult Customer Service Center.

## Materials

MOVABLE CONTACTS:
Base metal: Phosphor bronze
Plating: Gold over nickel plate
FIXED CONTACTS:
Base metal: Brass
Plating: Gold over nickel plate
COVER: PA66 - Black
ACTUATOR: PPS - Black
BASE: PPS - Black
SUPPORT BRACKET (A1 Terminal Style only): Steel with tin plate

## Build-A-Switch

To order, simply select desired option from each category and place in the appropriate box. Available options are shown and described on pages A-106 thru A-107. For additional options not shown in catalog, consult Customer Service Center.

F P 1 1 – S P – ☐ ☐ – B 1 – T P – ☐ ☐

**Designation**
**FP11** SPST N.O.

**Actuator Length**
**SP** Standard plunger 3.3mm

**Terminal Style**
**C1** Vertical
**A1** Right Angle

**Contact Plating**
**B1** Gold over nickel plate

**Packaging**
**TP** Tray packaging

**Cap**
**00** No cap
**01** White cap - bulk bagged
**02** Black cap - bulk bagged
**03** Red cap - bulk bagged

*Dimensions are shown: Inches (mm)*
*Specifications and dimensions subject to change*

# FP Series
# Sealed Ultra Miniature Pushbutton Switches

## SWITCH FUNCTION

**C1** VERTICAL

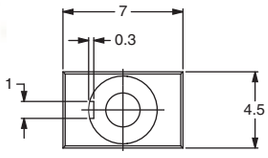


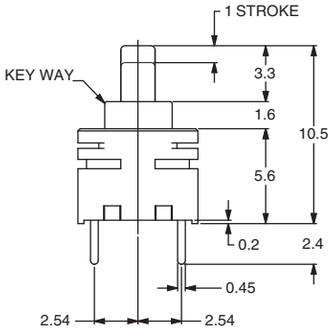


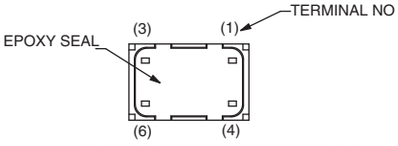


(4) AND (6) ARE SUPPORT TERMINALS

**A1** RIGHT ANGLE

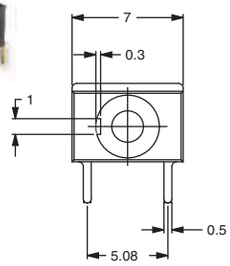


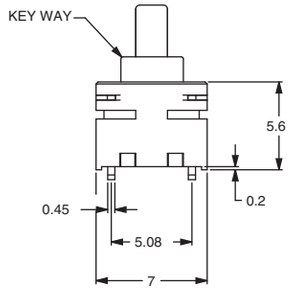


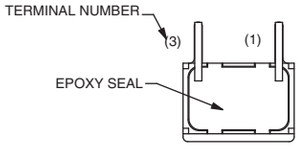


| MODEL NO. | SWITCH FUNCTION POS. 1 | SWITCH FUNCTION POS. 2 |
|---|---|---|
| FP11 | OFF | MOM |
| | CONNECTED TERMINALS | |
| | OPEN | 1-3 |

*SCHEMATIC SPST*

## ACTUATOR LENGTH

**SP** STANDARD PLUNGER 3.3MM

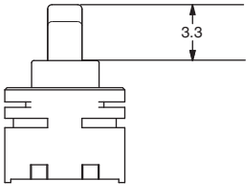


Third Angle Projection

*Dimensions are shown: mm*
*Specifications and dimensions subject to change*

## TERMINAL STYLE

**C1** VERTICAL

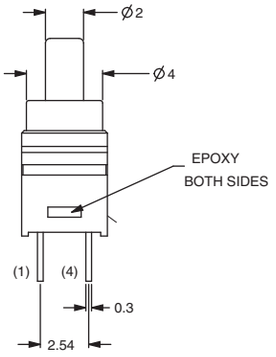


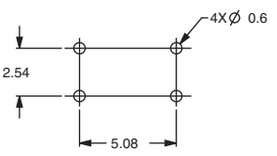


MOUNTING HOLE PATTERN

**A1** RIGHT ANGLE

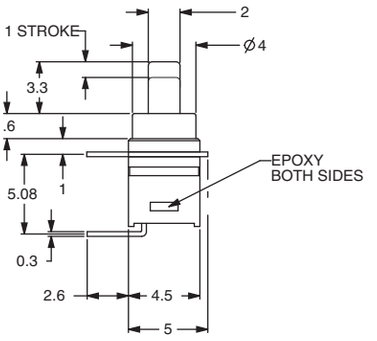


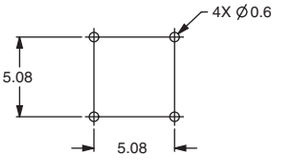


MOUNTING HOLE PATTERN

## CONTACT PLATING

**B1** GOLD OVER NICKEL PLATE

## PACKAGING

**TP** TRAY PACKAGING

## CAPS

| OPTION CODE | DESCRIPTION |
|---|---|
| 00 | NO CAP |
| 01 | WHITE CAP, BULK BAGGED |
| 02 | BLACK CAP, BULK BAGGED |
| 03 | RED CAP, BULK BAGGED |

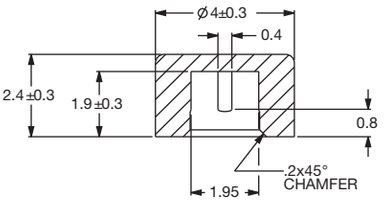


**To purchase Caps separately without switch, please use these part numbers**

| PART # | COLOR |
|---|---|
| 798D01000 | WHITE |
| 798D02000 | BLACK |
| 798D03000 | RED |

Third Angle Projection

*Dimensions are shown: mm*
*Specifications and dimensions subject to change*

# AP Series
# Industrial Pushbutton Switch

## Features/Benefits

- *IP67 sealed*
- *1,000,000 life cycle*
- *Illumination / non-illumination*
- *Multiple colored caps*
- *Threaded or snap-in mounting*
- *Caps available separately*
- *RoHS compliant*

## Typical Applications

- *Harsh environments*
- *Off-Road*
- *Industrial*
- *Medical*
- *Transportation*
- *Joystick control modules*
- *Gaming*
- *Military*

## Specifications

FUNCTION: SPST Momentary
CONTACT ARRANGEMENT: N.O.
MOUNTING TYPE:
Snap-in (no panel seal)
Threaded body (hex nut, lock washer, and panel seal gasket provided)
Torque spec for threaded body: Do not exceed 8-9 in-lbs (0.9-1.0 N.m)

## Mechanical

OPERATING LIFE: 1,000,000 cycles
TOTAL TRAVEL: 2.1 ± 0.2 mm
OPERATING POINT 1.55 ± 0.25 mm
OVER TRAVEL: 0.6 min.
OPERATING FORCE: 4N ± 1N standard configuration; other force option 2N ± 0.5N
VIBRATION: 10-500 Hz 10g Max
SHOCK: 60g 11ms sawtooth wave

## Electrical

CONTACT RATING:
200mA @ 24 V DC resistive (500,000 cycles)
100mA @ 50 V DC resistive (500,000 cycles)
400mA @ 32 V AC resistive (500,000 cycles)
125mA @ 125 V AC resistive (1,000,000 cycles)
DIELECTRIC STRENGTH: 1000 V AC min.
INSULATION RESISTANCE: 1 G Ω @ 500 VDC
INITIAL CONTACT RESISTANCE 50 mΩ max (without wire leads)
BOUNCE TIME: <5 ms

## Materials

HOUSING: PBT
BASE: PBT
CAP: PBT
ACTUATOR:
Illuminated: Clear polycarbonate
Non-illuminated: PBT
INTERNAL SEAL: Silicone rubber
TERMINALS: Copper alloy, gold over silver plating
MOVABLE CONTACT: Copper alloy, gold over silver plating
TERMINAL SEAL: Epoxy
WIRE LEADS: UL1569 Black 22 AWG

## Operating Environment

OPERATING TEMPERATURE: -40˚C to 85˚C (+105˚C non-illuminated)
ESD PROTECTION: 20 KV min.

## Process Environment

SEALING: IP67 for threaded body
IP65 for snap-in version (no panel seal)

**NOTE:** Specifications and materials listed above are for switches with standard options. For information on specific and custom switches, please contact Customer Service.

## Build-A-Switch

To order, simply select desired option from each category and place in the appropriate box.

A P — — — — — — — B — E

**Designation**
AP AP Series

**Operating Force**
2 2 Newtons
4 4 Newtons

**Actuator Style**
D Dome / Convex
C Concave
E Extended Dome
N None

**Actuator Color**
0 No Cap
2 Black
3 Red
4 Orange
5 Yellow
6 Green
7 Blue
9 Gray

Please contact Customer Service for additional colors and paint / laser etched button options.

**Illumination**
00 No LED*
01 Super White
02 Bi-color; Red (Green)
03 Red
05 Amber
06 Green
07 Super Blue
08 Bi-color; Amber (Green)

* No LED available in short body only

**Bushing Style****
S** Snap-in plastic
T Threaded plastic

** No panel seal option
*** PC terminals not available with illumination

**Termination**
Z Solder Lug
W 12" Wire Leads 22 AWG
C*** PC Terminals

**Contact Material**
B Gold

**Terminal Seal**
E Epoxy
All models are epoxy sealed

Contact Customer Service for additional hardware options.

*Specifications and dimensions subject to change*

## STANDARD VIEW

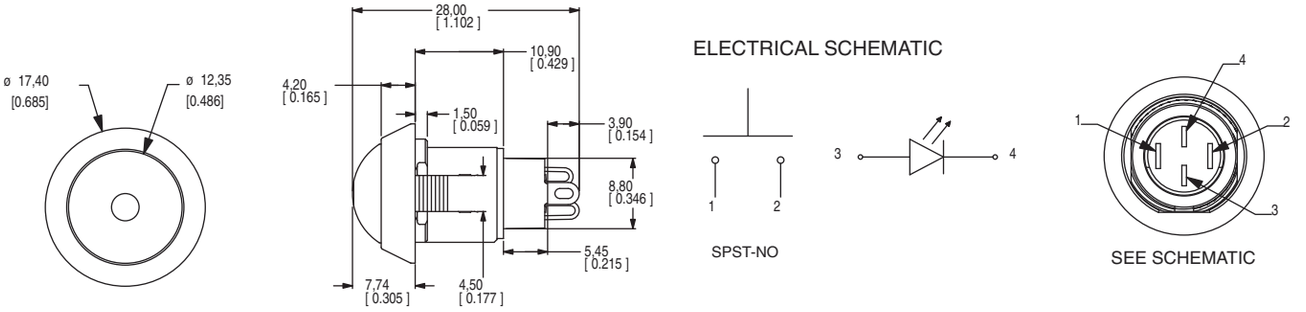


## OPERATING FORCE

| OPTION CODE | OPERATING FORCE |
|---|---|
| 2 | 2 N, 200 g |
| 4 | 4 N, 400 g |

## ACTUATOR STYLE

**D** DOME / CONVEX

**E** EXTENDED DOME

**C** CONCAVE

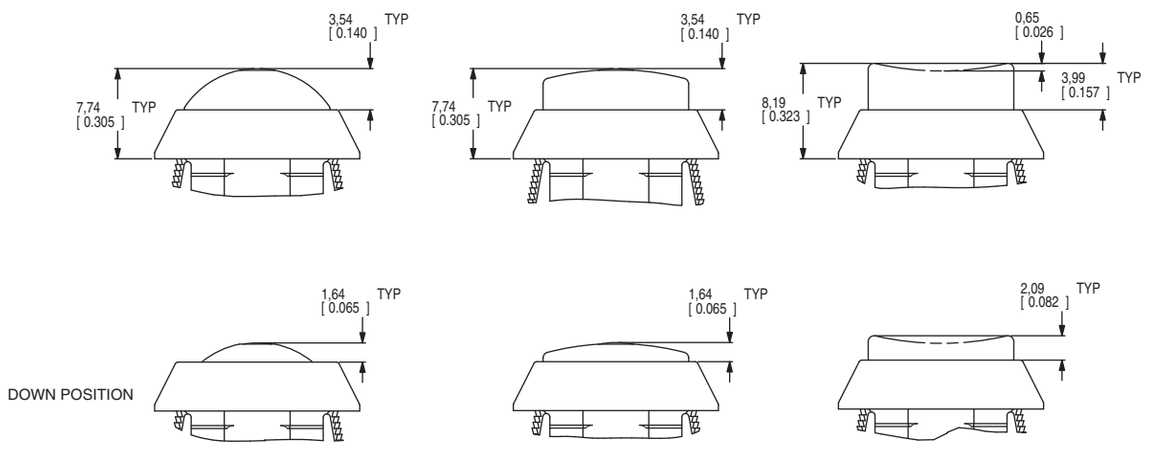


## ACTUATOR COLOR

| OPTION CODE | ACTUATOR COLOR |
|---|---|
| 0 | No Cap |
| 2 | Black |
| 3 | Red |
| 4 | Orange |
| 5 | Yellow |
| 6 | Green |
| 7 | Blue |
| 9 | Gray |

For additional colors please contact Customer Service.

Third Angle Projection

*Dimensions are shown: mm (inches*
*Specifications and dimensions subject to change*

# AP Series
# Industrial Pushbutton Switch

## ILLUMINATION

| OPTION CODE | ILLUMINATION TYPE | TYPICAL INTENSITY* MIN | MAX | PEAK WAVELENGTH | Vf Forward Voltage |
|---|---|---|---|---|---|
| | | (mcd) | | (nm) | |
| 00 | Model without illumination | N/A | | N/A | |
| 01 | LED Super White | 4,000 | 5,000 | N/A | 3.5 |
| 02 | LED Bi-Color – Red (Green) | 10 | 20 | 635/565 | 2.0 |
| 03 | LED Red | 4 | 8 | 700 | 2.0 |
| 05 | LED Amber | 35 | 50 | 610 | 2.0 |
| 06 | LED Green | 35 | 50 | 565 | 2.0 |
| 07 | LED Super Blue | 800 | 1,500 | 470 | 3.8 |
| 08 | LED Bi-Color – Amber (Green) | 10 | 10 | 585/565 | 2.0 |

*LED FORWARD CURRENT: 20 mA
LED FORWARD VOLTAGE: see chart above
LED REVERSE VOLTAGE: 5.0 V MAX

* For information on specific and custom LED, please contact Customer Service.

NOTE:
For bi-color LED's the polarity must be reversed to alternate the color

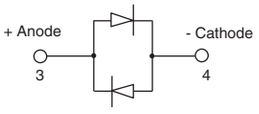


## BUSHING STYLE

**S** SNAP-IN

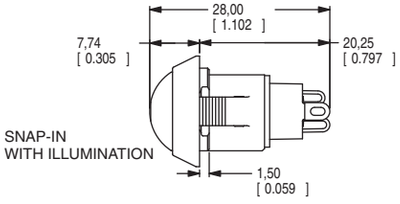


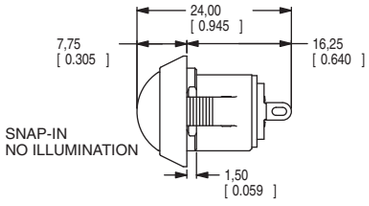


**T** THREADED PLASTIC

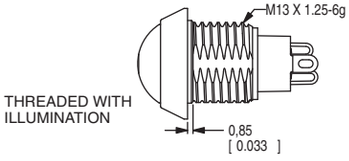


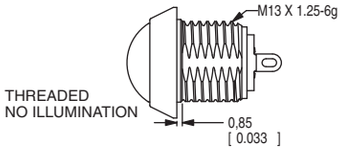


PANEL CUTOUT

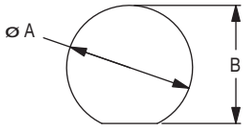


| PANEL THICKNESS | DIM A (± 0.05 mm) | DIM B (± 0.05 mm) |
|---|---|---|
| 1 mm [0.039 in] | 13.70 mm [0.539 in] | 13.00 mm [0.512 in] |
| 2 mm [0.079 in] | 13.80 mm [0.539 in] | 13.00 mm [0.512 in] |
| 3 mm [0.118 in] | 13.90 mm [0.547 in] | 13.10 mm [0.516 in] |
| THREADED BODY MIN PANEL THICKNESS 1 mm | 13.70 mm [0.539 in] | 13.00 mm [0.512 in] |

Third Angle Projection

A 0.1mm min. chamfer on the leading edge of the mounting hole is recommended for snap-in version.

*Dimensions are shown: mm (inches)*
*Specifications and dimensions subject to change*

## TERMINATION

**Z** SOLDER LUG

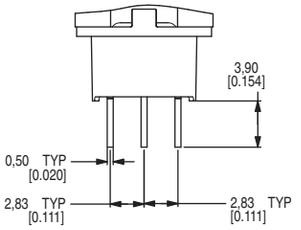


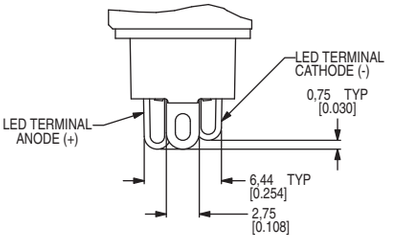


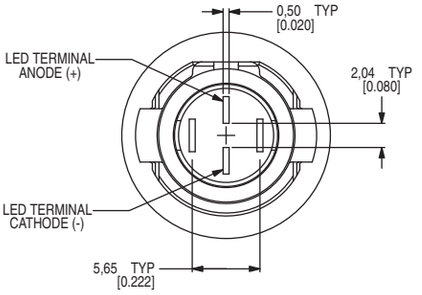


* Switching terminals are gold and LED terminals are silver

**C** PC TERMINALS

*** Illumination not available with PC Terminals

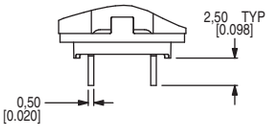


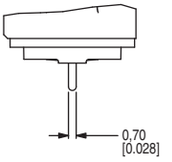


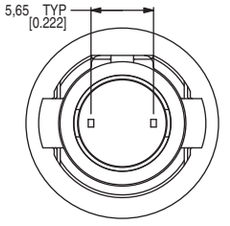


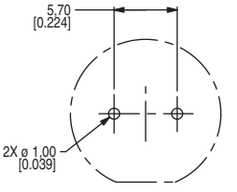


PCB HOLE PATTERN
BOARD VIEW

**W** 12" WIRE LEADS 22 AWG

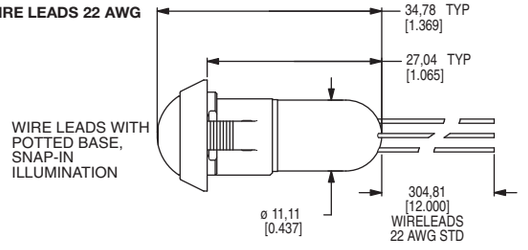


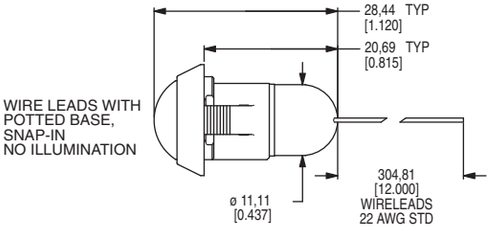


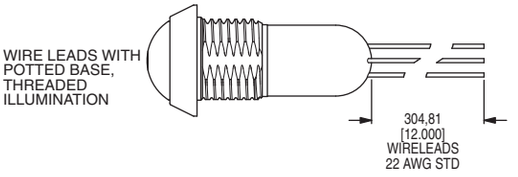


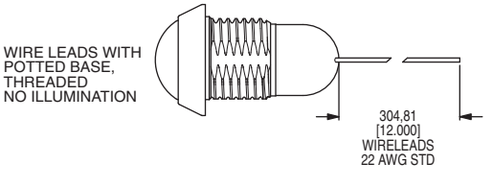


Wires: Black wires - Terminals
Red wires - LED (+) Positive
White wire - LED (-) Negative

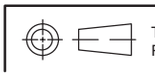

Third Angle
Projection

*Dimensions are shown: mm (inches*
*Specifications and dimensions subject to change*

# AP Series
# Industrial Pushbutton Switch

## CONTACT MATERIAL

**B** GOLD

| OPTION CODE | CONTACT MATERIAL |
|---|---|
| B | Gold |

## TERMINAL SEAL

**E** EPOXY

**All models are epoxy sealed**

## HARDWARE

**LOCK WASHER**
**Part Number 647D00000**

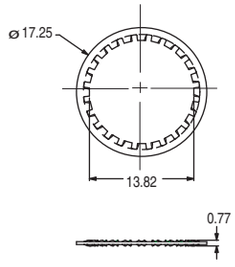


**HEX NUT**
**Part number 515D00000**

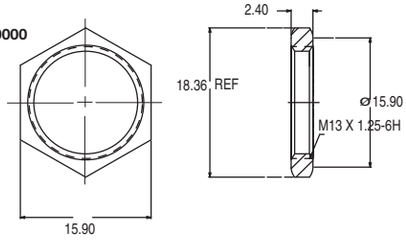


**PANEL SEAL**
**Part Number 655D00000**

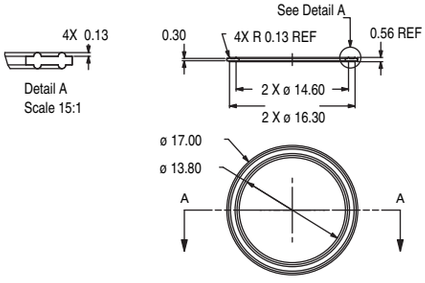


**Caps available on next page**

Third Angle Projection

*Dimensions are shown: mm (inches)*
*Specifications and dimensions subject to change*

## AVAILABLE CAPS

481D XX XXX

Cap Color

Style

| OPTION | CAP COLOR |
|---|---|
| 01 | WHITE |
| 02 | BLACK |
| 03 | RED |
| 04 | ORANGE |
| 05 | YELLOW |
| 06 | GREEN |
| 07 | BLUE |
| 08 | BROWN |
| 09 | GRAY |

| PART NUMBER | HOLE | STYLE |
|---|---|---|
| 481DXX000 | NO | DOME |
| 481DXX001 | YES | DOME |
| 481DXX002 | NO | EXTENDED DOME |
| 481DXX003 | YES | EXTENDED DOME |
| 481DXX004 | NO | CONCAVE |
| 481DXX005 | YES | CONCAVE |

### DOME

**481DXX000 = NO HOLE**
**481DXX001 = HOLE**

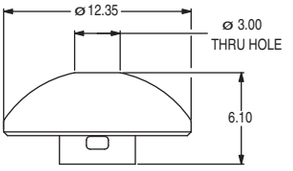


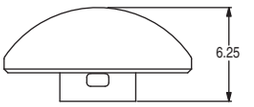


### EXTENDED DOME

**481DXX002 = NO HOLE**
**481DXX003 = HOLE**

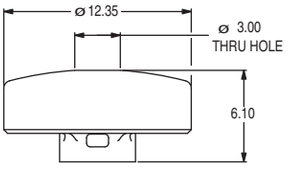


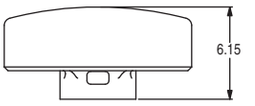


### CONCAVE

**481DXX004 = NO HOLE**
**481DXX005 = HOLE**

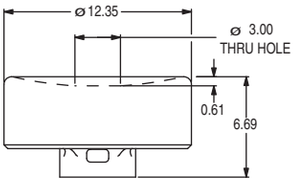


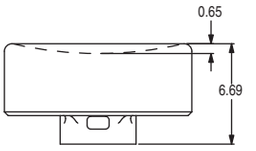


Third Angle Projection

*Dimensions are shown: mm (inches)*
*Specifications and dimensions subject to change*

# APB Series
# Backlit Pushbutton Switch

## Features/Benefits

- *IP67 sealed*
- *1,000,000 life cycle*
- *Illumination*
- *Threaded or snap-in mounting*
- *RoHS compliant*

## Typical Applications

- *Harsh environments*
- *Off-Road*
- *Industrial*
- *Medical*
- *Transportation*
- *Joystick control modules*
- *Gaming*
- *Military*

## Specifications

FUNCTION: SPST Momentary
CONTACT ARRANGEMENT: N.O.
MOUNTING TYPE:
Snap-in (no panel seal)
Threaded body (hex nut, lock washer, and panel seal gasket provided)
Torque spec for threaded body: Do not exceed 8-9 in-lbs (0.9-1.0 N.m)

## Mechanical

OPERATING LIFE: 1,000,000 cycles
TOTAL TRAVEL: 2.1 ± 0.2 mm
OPERATING POINT 1.55 ± 0.25 mm
OVER TRAVEL: 0.6 min.
OPERATING FORCE: 4N ± 1N standard configuration; other force option 2N ± 0.5N
VIBRATION: 10-500 Hz 10g Max
SHOCK: 60g 11ms sawtooth wave

## Electrical

CONTACT RATING:
200mA @ 24 V DC resistive (500,000 cycles)
100mA @ 50 V DC resistive (500,000 cycles)
400mA @ 32 V AC resistive (500,000 cycles)
125mA @ 125 V AC resistive (1,000,000 cycles)
DIELECTRIC STRENGTH: 1000 V AC min.
INSULATION RESISTANCE: 1 G Ω @ 500 VDC
INITIAL CONTACT RESISTANCE 50 mΩ max (without wire leads)
BOUNCE TIME: <5 ms

## Materials

HOUSING: PBT
BASE: PBT
CAP: Painted polycarbonate
ACTUATOR:
Illuminated: Clear polycarbonate
INTERNAL SEAL: Silicone rubber
TERMINALS: Copper alloy, gold over silver plating
MOVABLE CONTACT: Copper alloy, gold over silver plating
TERMINAL SEAL: Epoxy
WIRE LEADS: UL1569 Black 22 AWG

## Operating Environment

OPERATING TEMPERATURE: -40˚C to 85˚C
ESD PROTECTION: 20 KV min.

## Process Environment

SEALING: IP67 for threaded body
IP65 for snap-in version (no panel seal)

**NOTE:** Specifications and materials listed above are for switches with standard options. For information on specific and custom switches, please contact Customer Service.

## Build-A-Switch

To order, simply select desired option from each category and place in the appropriate box.

A P B — [ ] — E — [ ][ ] — [ ] — [ ] — B — E — [ ][ ][ ]

**Designation**
APB APB Series

**Operating Force**
2 2 Newtons
4 4 Newtons

**Cap**
E Extended Dome (600E)

**Illumination**
01 Super White
07 Super Blue

**Bushing Style**
S Snap-in plastic
T Threaded plastic

**Termination**
Z Solder Lug
W 12" Wire Leads 22 AWG

**Contact Material**
B Gold

**Terminal Seal**
E Epoxy

**Cap Symbol**
000 Painted black over white without symbol*
001 Plus
002 Locked
003 Engine stop
004 Park brake release
005 Engine start
006 Fast
007 Slow
008 Unlocked
009 Rock shaft lower
010 Minus

* cap painted black over white to allow customer laser etching

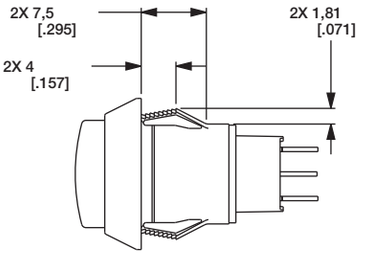


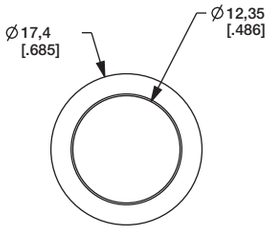


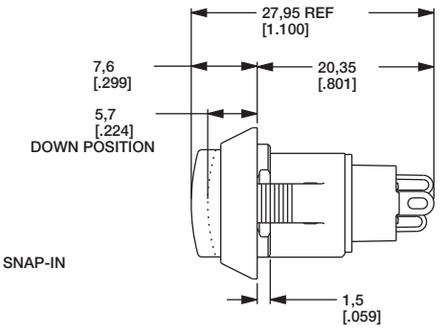


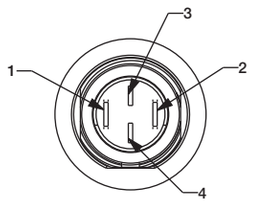


SEE SCHEMATIC

THREADED

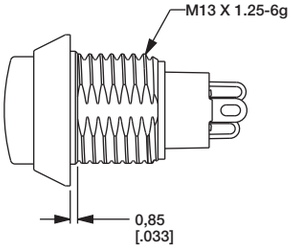


ELECTRICAL SCHEMATIC

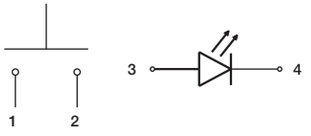


SPST-NO-DB

PANEL CUTOUT

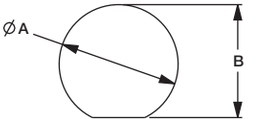


| PANEL THICKNESS | DIM A (±0.05 MM) | DIM B (±0.05 MM) |
|---|---|---|
| 1 MM [0.039 IN] | 13.70 MM [0.539 IN] | 13.00 MM [0.512 IN] |
| 2 MM [0.079 IN] | 13.80 MM [0.539 IN] | 13.00 MM [0.512 IN] |
| 3 MM [0.118 IN] | 13.90 MM [0.547 IN] | 13.10 MM [0.516 IN] |
| THREADED BODY MIN PANEL THICKNESS 1 MM | 13.70 MM [0.539 IN] | 13.00 MM [0.512 IN] |

A 0.1 MM MIN CHAMFER ON THE LEADING EDGE OF MOUNTING HOLE IS RECOMMENDED FOR SNAP-IN VERSION.

Third Angle Projection

*Dimensions are shown: Inches (mm)*
*Specifications and dimensions subject to change*

# APB Series
# Backlit Pushbutton Switch

## TERMINATION

**W** 12" WIRE LEADS

**Z** SOLDER LUG

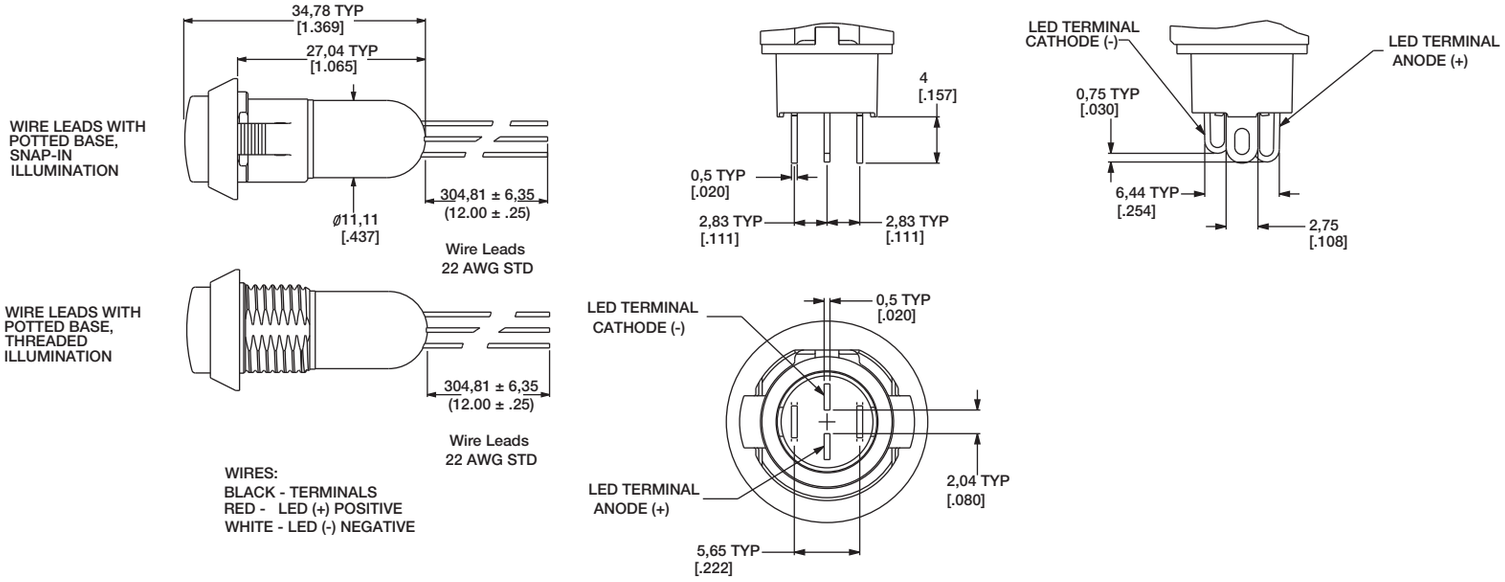


## CONTACT MATERIAL

**B** GOLD

| OPTION CODE | CONTACT MATERIAL |
|---|---|
| B | Gold |

## TERMINAL SEAL

**E** EPOXY

**All models are epoxy sealed**

Third Angle Projection

*Dimensions are shown: Inches (mm)*
*Specifications and dimensions subject to change*

## CAP SYMBOLS

| | | |
|---|---|---|
| -000 | | NO SYMBOL |
| -001 | | PLUS |
| -002 | | LOCKED |
| -003 | STOP | ENGINE STOP |
| -004 | | PARK BRAKE RELEASE |
| -005 | | ENGINE START |
| -006 | | FAST |
| -007 | | SLOW |
| -008 | | UNLOCKED |
| -009 | | ROCK SHAFT LOWER |
| -010 | | MINUS |

NOTES:
1. ALL GRAPHICS MUST BE POSITIONED AS SHOWN, PERPENDICULAR TO ALIGNMENT FEATURE ON UNDERSIDE OF CAP.
2. GRAPHIC MARKING MUST BE ALIGNED WITH THE FLAT FEATURE ON THE UNDERSIDE OF THE CAP AS SHOWN, TOLERANCE ±3°

PANEL CUTOUT

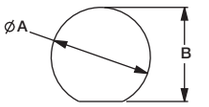


Panel Orientation
Flat indicates bottom

See chart on previous page for dimensions

## HARDWARE

**LOCK WASHER**
**Part Number 647D00000**

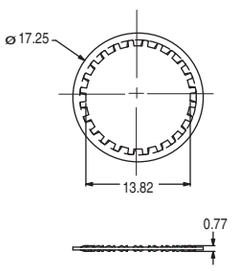


**HEX NUT**
**Part number 515D00000**

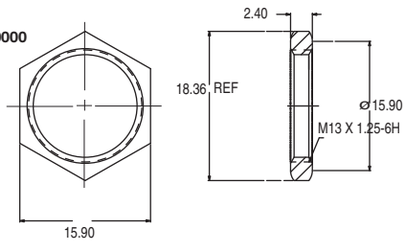


**PANEL SEAL**
**Part Number 655D00000**

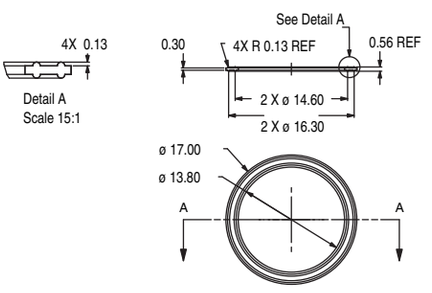


Third Angle Projection

*Dimensions are shown: Inches (mm)*
*Specifications and dimensions subject to change*

# HP Series
# Hall Effect Pushbutton Switch

## *Features/Benefits*

- ***IP68 sealed***
- ***10,000,000 life cycle***
- ***Multiple colored caps***
- ***Redundant output available***

## *Typical Applications*

- ***Harsh environments***
- ***Off-Road***
- ***Industrial***
- ***Medical***
- ***Transportation***
- ***Joystick control modules***
- ***Gaming***
- ***Military***

## Specifications

FUNCTION: Linear output (See chart on next page)
MOUNTING TYPE: Front mount, Rear mount

## Mechanical

MECHANICAL TRAVEL: 0.150 (3.81mm)
SHOCK: 60g 11ms sawtooth wave
VIBRATION: 10-500Hz 10g max.

## Electrical

SUPPLY VOLTAGE: 5 ± 0.5 VDC
SUPPLY CURRENT: 10mA max.
OUTPUT CURRENT: 1mA max.
OUTPUT VOLTAGE: Programable from 0.5 -4.5V
ESD PROTECTION: 16kV per EIA-545

## Materials

CASE / BUSHING: Anodized Aluminum
INSIDE HOUSING: PBT
CAP: PBT
ACTUATOR: PBT

## Operating Environment

OPERATING TEMPERATURE: -40˚C to 85˚C
OPERATING LIFE: 10,000,000 cycles
SEALING: IP68S

**NOTE:** Specifications and materials listed above are for switches with standard options. For information on specific and custom switches, please contact Customer Service.

## Build-A-Switch

To order, simply select desired option from each category and place in the appropriate box.

H P — ☐ — ☐ — ☐ — ☐ — ☐ — ☐ — ☐ — ☐ — ☐

**Designation**
HP HP Series

**Bushing / Mounting Style**
1 Front mount, 5/8-24 thread
2 Rear mount, 5/8-24 thread
3 Rear mount, 15/32-32 thread

**Cap Style**
1 ø .625 Dome (front mount only)
2 ø .370 Flat

**Sensor Configuration**
S Single Output
D Dual Output, Output 2 mirrors Output 1 (see figure 1)

**Output Voltage Code**
1 V1= 1.0V, V2= 4.0V
2 V1= 4.0V, V2= 1.0V
3 V1= 0.5V, V2= 4.5V
4 V1= 4.5V, V2= 0.5V

**Actuation Force**
S 2.7lb (12N)

**Termination Style**
W 12" wire leads, 22 AWG XLPE (26 AWG for Dual Output)

**Cap Color**
1 White
2 Black (STD)
3 Red
4 Orange
5 Yellow

**Bushing Finish**
1 Clear anodize
2 Black anodize (STD)

**Hardware**
0 No hardware
1 Plated hardware (STD)
2 Stainless hardware

Please contact Customer Service for additional options.

## STANDARD VIEW

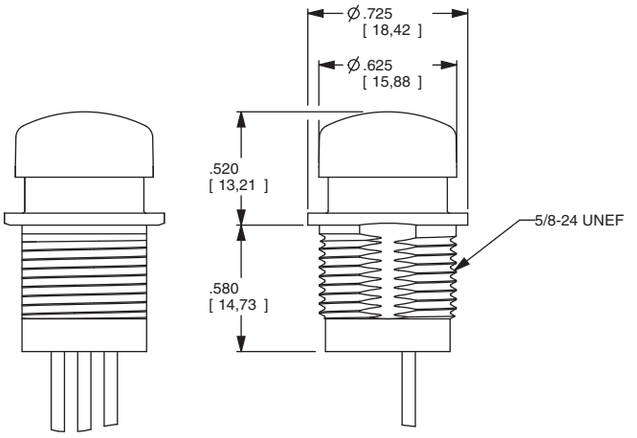


HP11

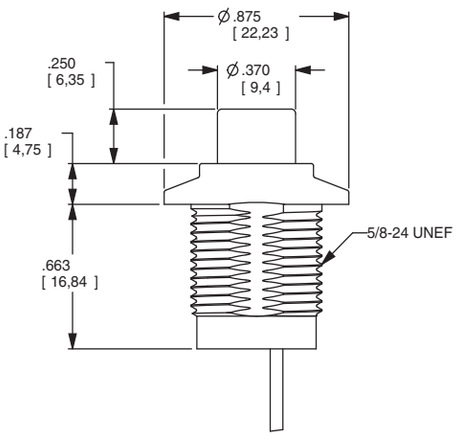


HP12

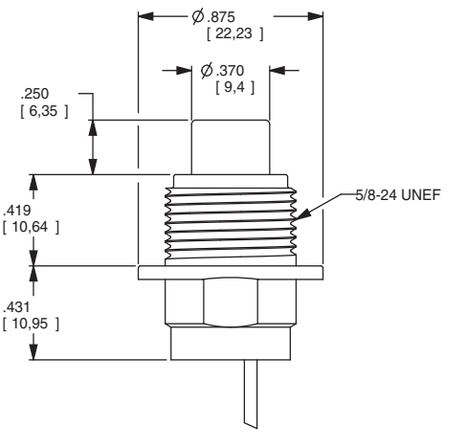


HP22

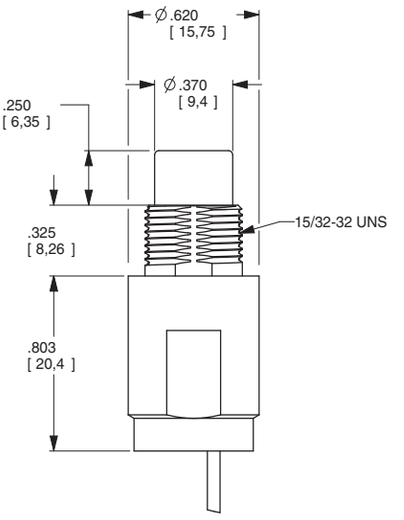


HP32

FIGURE 1: OUTPUT VOLTAGE

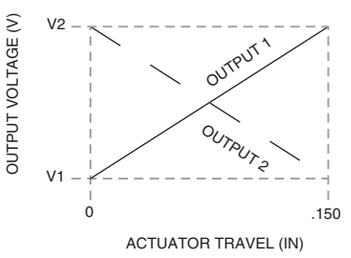


FIGURE 2- SCHEMATIC

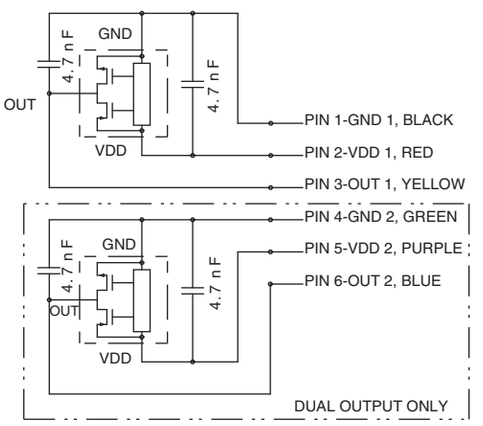


Third Angle Projection

*Dimensions are shown: Inches (mm)*
*Specifications and dimensions subject to change*

# NP Series
# Sealed Industrial Pushbutton Switch

## *Features/Benefits*

- ***IP68 sealed***
- ***1,000,000 life cycle***
- ***Multiple housing styles***
- ***Capable of up to 5A resistive load***
- ***Wirelead options available***
- ***RoHS compliant***

## *Typical Applications*

- ***Harsh environments***
- ***Off-Road***
- ***Industrial***
- ***Transportation***
- ***Military***

## Specifications

FUNCTION: SPDT Double Break (Form Z) Momentary
CONTACT ARRANGEMENT: N.O. and N.C.
MOUNTING TYPE: Threaded front or rear mount and slot mount
TORQUE SPEC FOR THREADED BODY: Do not exceed 50 in-lbs (5.65 N-m)

## Mechanical

OPERATING LIFE: 1,000,000 cycles
TOTAL TRAVEL: 1.6 ± 0.15 mm
OPERATING POINT 0.9 ± 0.25 mm
OVER TRAVEL: 0.45 min.
OPERATING FORCE: 8N ± 1.5N
VIBRATION: 10-500 Hz 10g Max
SHOCK: 50g 11ms sawtooth wave

## Electrical

CONTACT RATING:
Option G - Gold over Silver
10mA/5 VDC (1,000,000 cycles)
Option Q - Silver
1A/32 VDC resistive (100,000 cycles)
5A/32 VDC resistive (25,000 cycles)
3A/32 VDC resistive (25,000 cycles)

## Electrical (cont.)

DIELECTRIC STRENGTH: 1000 V AC for 1 min.
INSULATION RESISTANCE: 1 G Ω @ 500 VDC
INITIAL CONTACT RESISTANCE 50 mΩ max (without wire leads)
BOUNCE TIME: <5 ms

## Materials

HOUSING: 6061-T6 Aluminum, black or clear anodized
BASE: PBT
CAP: PBT
ACTUATOR: PBT
INTERNAL SEAL: Silicone rubber
TERMINALS: Copper with silver nickel inlay, silver plating
MOVABLE CONTACT: Copper alloy, gold over silver plating
TERMINAL SEAL: Epoxy

## Operating Environment

OPERATING TEMPERATURE: -40˚C to +85˚C
ESD PROTECTION: 15KV min.

## Process Environment

SEALING: IP68

**NOTE:** Specifications and materials listed above are for switches with standard options. For information on specific and custom switches, please contact Customer Service.

## Build-A-Switch

To order, simply select desired option from each category and place in the appropriate box.

N P — 8 — ☐ — ☐ — ☐ — ☐ — ☐ — ☐ — E

**Designation**
**NP** NP Series

**Operating Force**
**8** 8 Newtons

**Actuator Style**
**S** Standard
**E** Extended (D housing style only)

**Actuator Color***
**2** Black (STD)
**3** Red
**4** Orange
**5** Yellow
**9** Gray

* Please contact Customer Service for additional colors.

**Housing Style**
**T** Standard threaded mount
**L** Long threaded mount
**H** Short threaded mount
**S** Slot mount
**R** Rear mount
**D** Dome bezel
**P** Tapered bezel

**Housing Anodizing Color**
**1** Clear anodized
**2** Black anodized (STD)

**Termination**
**03** Solder Lug (STD)
**02** PC Pin (G Contact Material)
**W4** 4x 12" 22 AWG UL1569 wire (overmolded)
**W3** 3x 12" 22 AWG UL1569 wire (overmolded)

**Contact Material**
**Q** Silver (STD)
**G** Gold over silver

**Terminal Seal**
**E** Epoxy
All models are epoxy sealed

## STANDARD VIEW

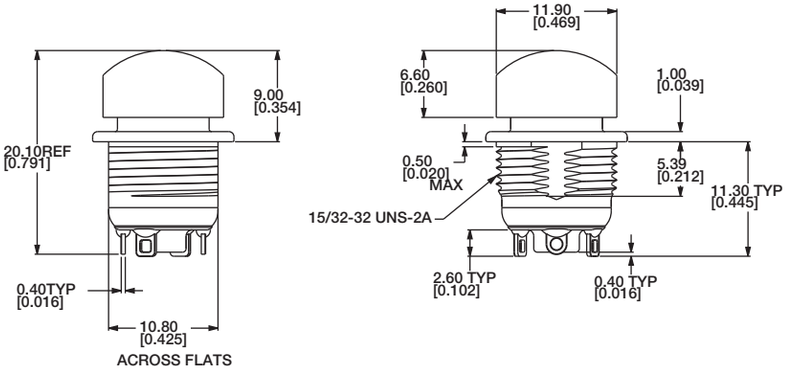


ELECTRICAL SCHEMATIC

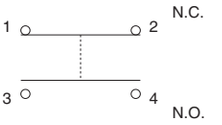


## OPERATING FORCE

| OPTION CODE | OPERATING FORCE |
|---|---|
| 8 | 8 N |

## ACTUATOR STYLE

**S** STANDARD

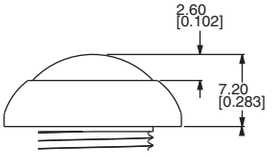


**E** EXTENDED (D HOUSING STYLE ONLY)

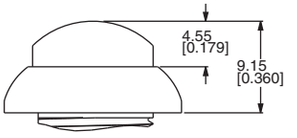


## ACTUATOR COLOR

| OPTION CODE | ACTUATOR COLOR |
|---|---|
| 2 | Black |
| 3 | Red |
| 4 | Orange |
| 5 | Yellow |
| 9 | Gray |

For additional colors please contact Customer Service.

Third Angle Projection

*Dimensions are shown: mm (inches)*
*Specifications and dimensions subject to change*

# NP Series
# Sealed Industrial Pushbutton Switch

## HOUSING STYLE

### T STANDARD THREADED MOUNT

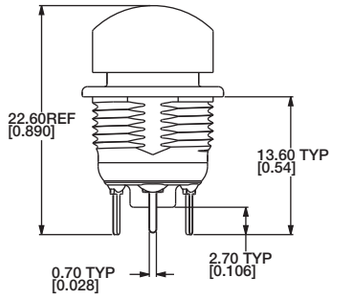


PC TERMINALS

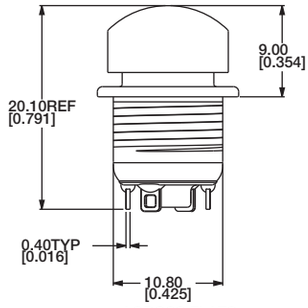


ACROSS FLATS

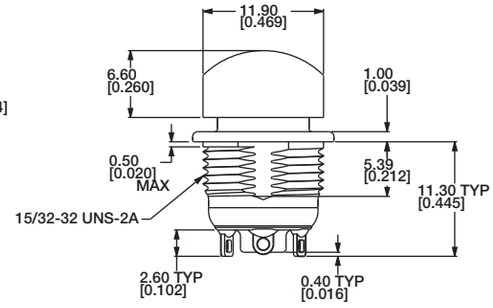


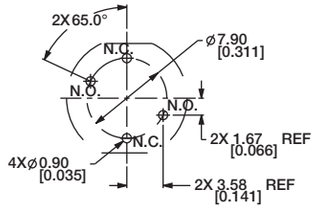


PC HOLE PATTERN
BOARD VIEW

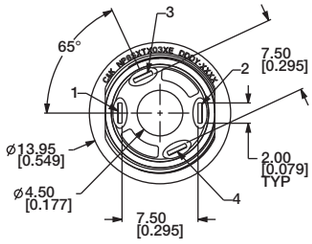


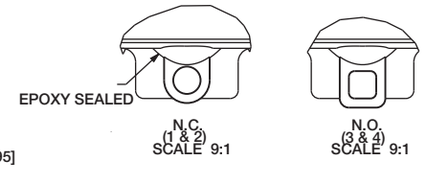


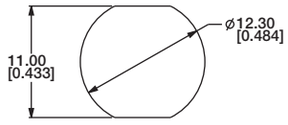


PANEL CUTOUT

### L LONG THREADED MOUNT

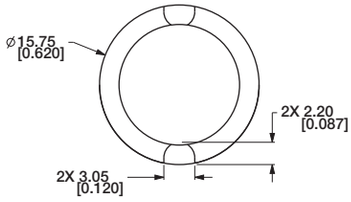


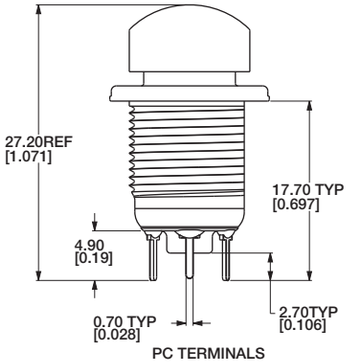


PC TERMINALS

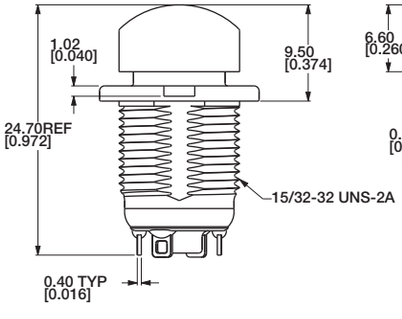


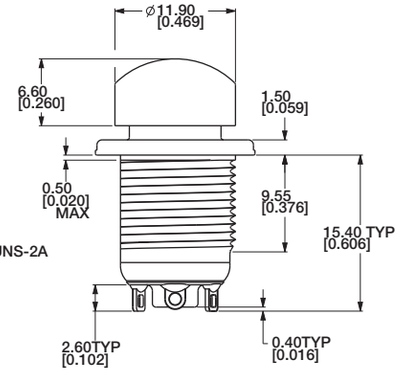


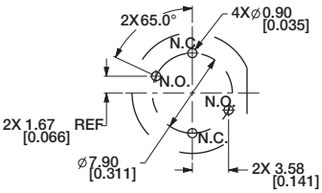


PC HOLE PATTERN
BOARD VIEW

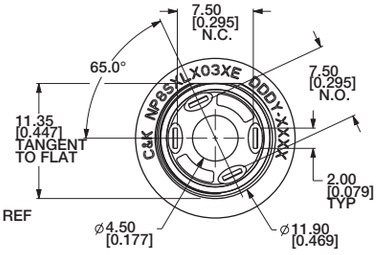


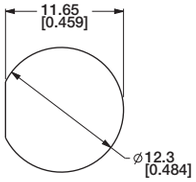


PANEL CUTOUT

Third Angle
Projection

*Dimensions are shown: mm (inches)*
*Specifications and dimensions subject to change*

## HOUSING STYLE

### H SHORT THREADED MOUNT

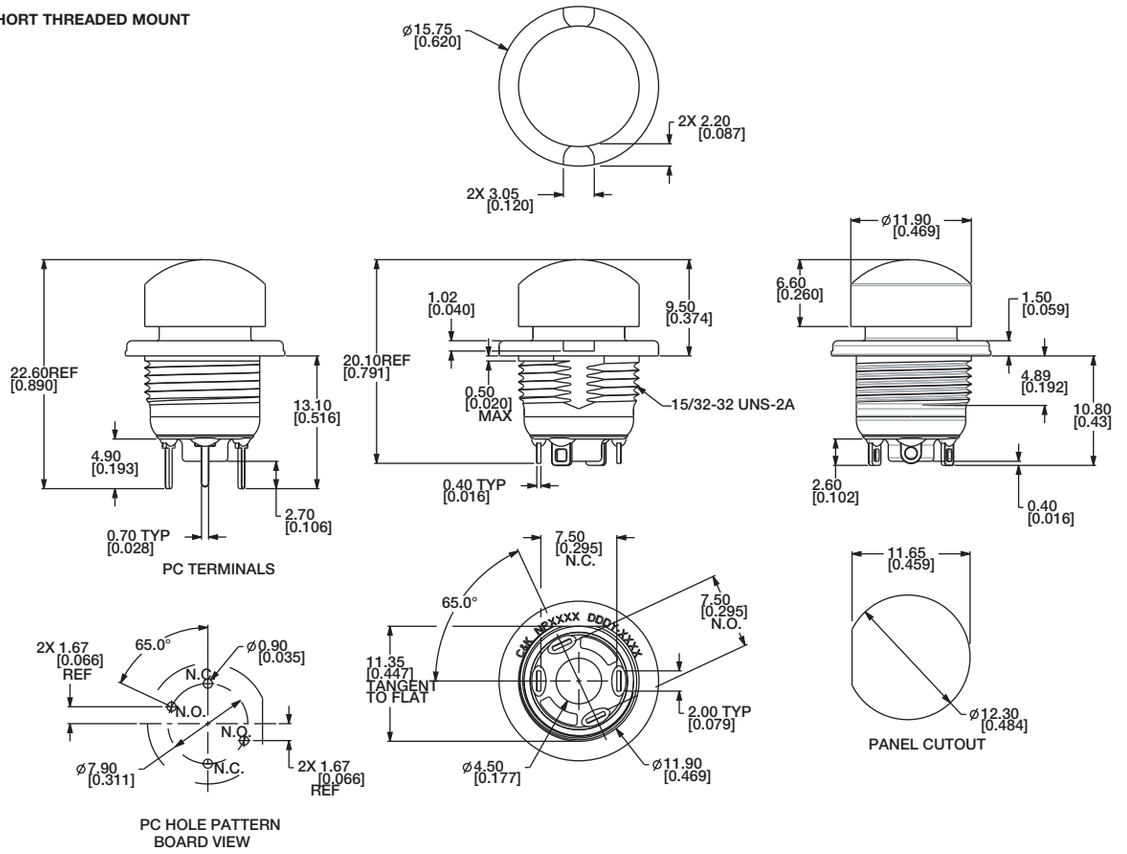


### S SLOT MOUNT

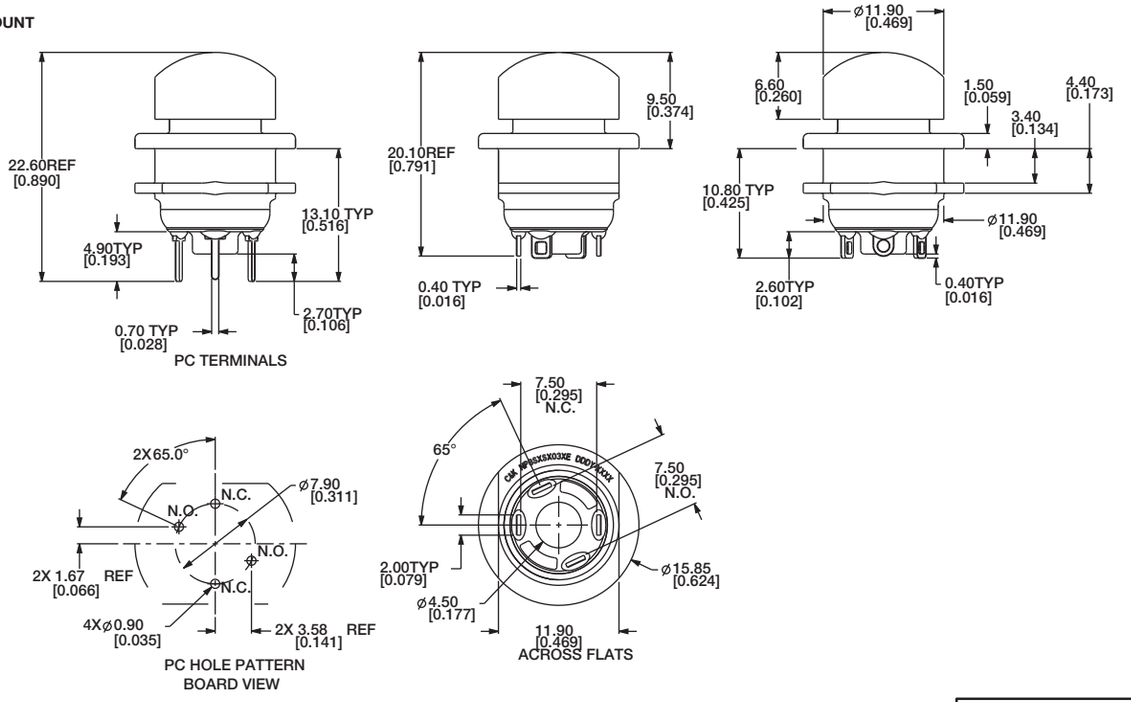


Third Angle
Projection

*Dimensions are shown: mm (inches)*
*Specifications and dimensions subject to change*

# NP Series
# Sealed Industrial Pushbutton Switch

## HOUSING STYLE

### R REAR MOUNT

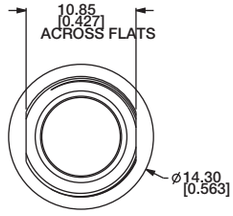


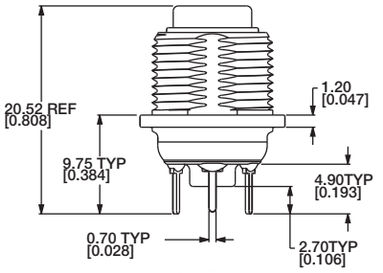


PC TERMINALS

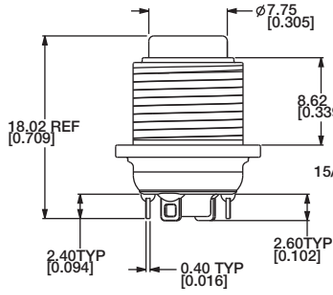


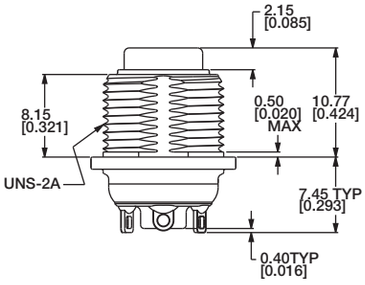


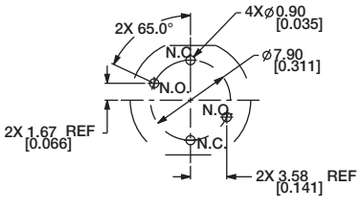


PC HOLE PATTERN
BOARD VIEW

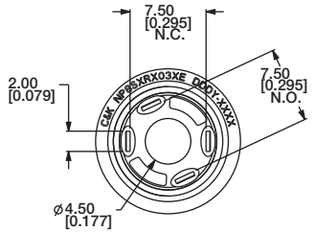


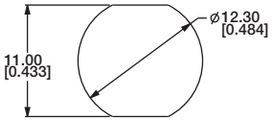


PANEL CUTOUT

### D DOME BEZEL

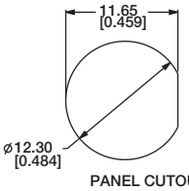


PANEL CUTOUT

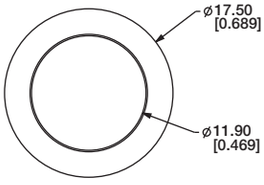


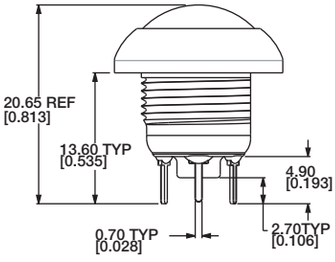


PC TERMINALS

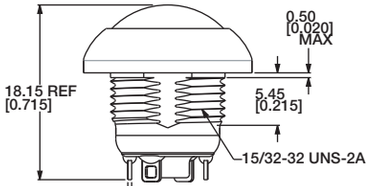


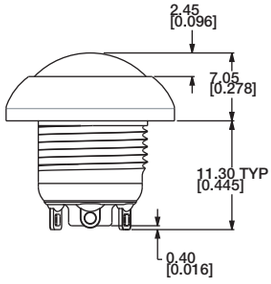


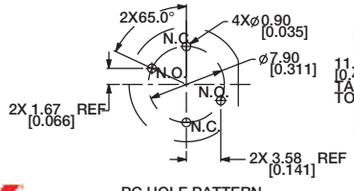


PC HOLE PATTERN
BOARD VIEW

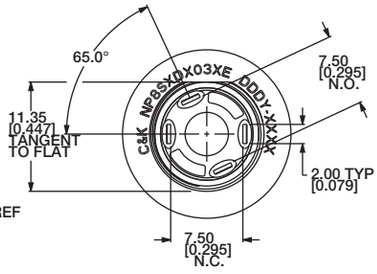


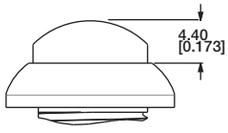


EXTENDED CAP

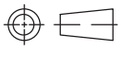

Third Angle
Projection

*Dimensions are shown: Inches (mm)*
*Specifications and dimensions subject to change*

## HOUSING STYLE

**P** TAPERED BEZEL

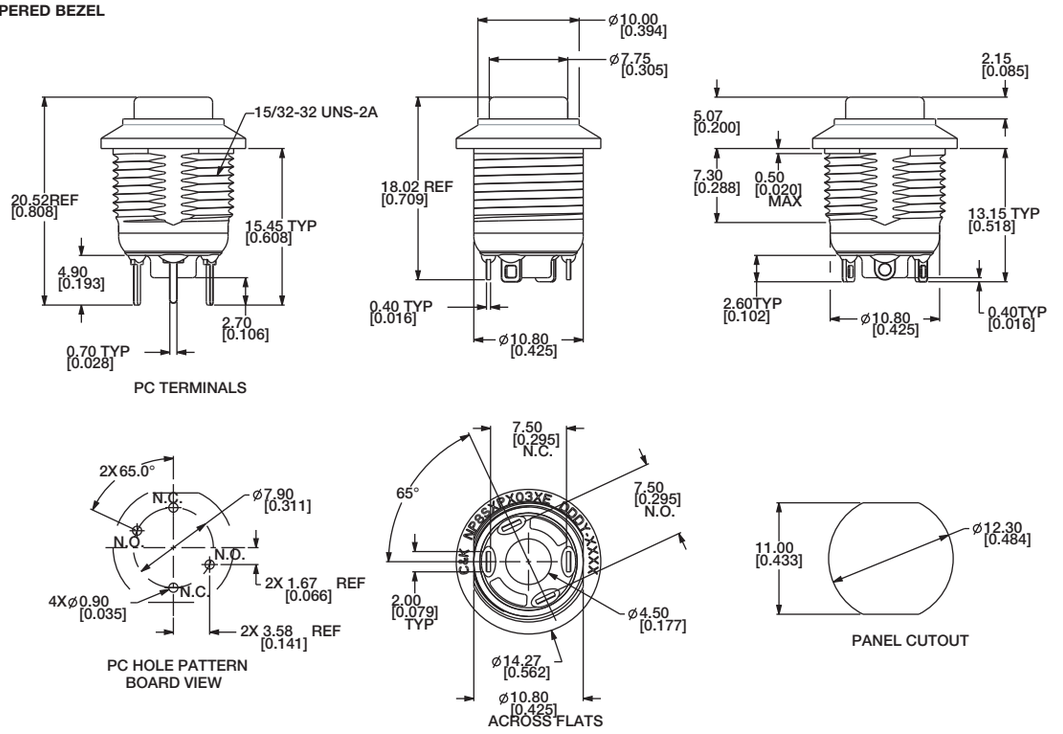


## HOUSING ANODIZING COLOR

| OPTION CODE | ANODIZING COLOR |
|---|---|
| 1 | Clear anodized |
| 2 | Black anodized (STD) |

## TERMINATION

**03** SOLDER LUG (STD)

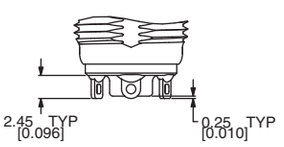


**02** PC PIN (G CONTACT MATERIAL)

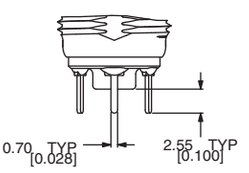


Third Angle Projection

*Dimensions are shown: Inches (mm)*
*Specifications and dimensions subject to change*

# NP Series
# Sealed Industrial Pushbutton Switch

## TERMINATION

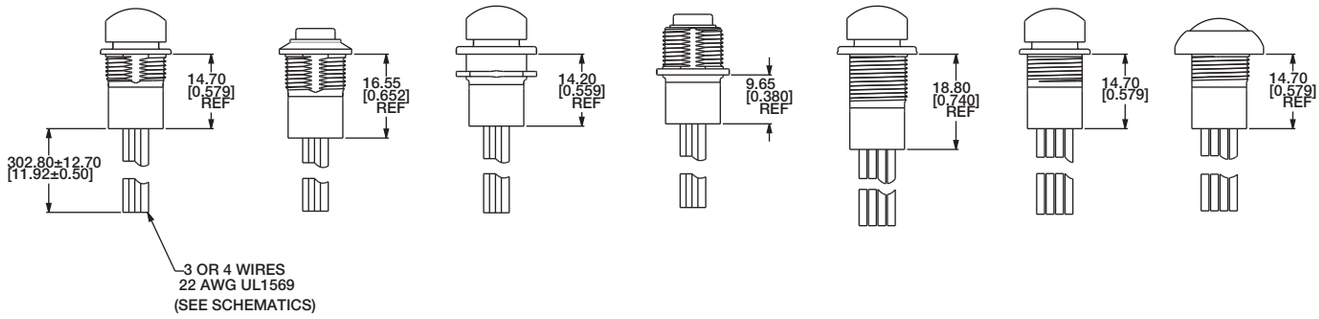


**W3** 3X 12" 22 AWG UL1569 WIRE (OVERMOLDED)

**W4** 4X 12" 22 AWG UL1569 WIRE (OVERMOLDED)

ELECTRICAL SCHEMATIC - 3 WIRES

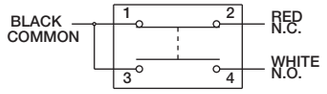


ELECTRICAL SCHEMATIC - 4 WIRES

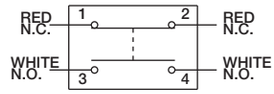


## CONTACT MATERIAL

| OPTION CODE | CONTACT MATERIAL |
|---|---|
| Q | Silver (STD) |
| G | Gold over Silver |

## TERMINAL SEAL

**E** EPOXY

**All models are epoxy sealed**

## HARDWARE

**HEX NUT**

**707100201 Nickel-plated**

**LOCKWASHER**

**700302202**

**PANEL GASKET**

**851D02000**

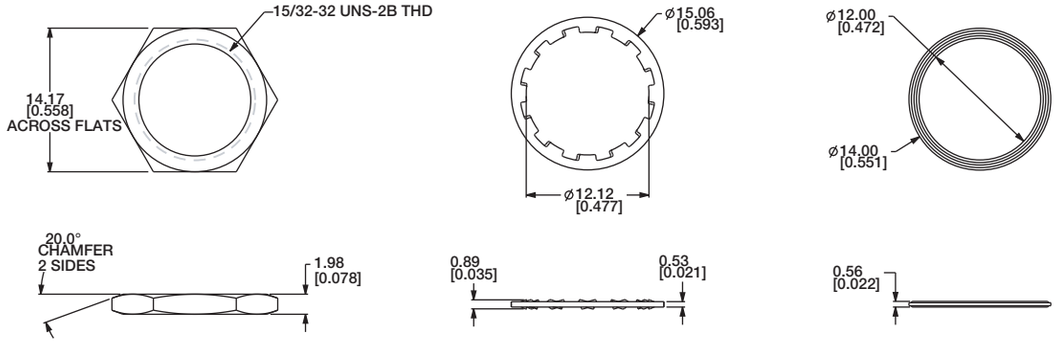


Third Angle Projection

*Dimensions are shown: mm (inches)*
*Specifications and dimensions subject to change*

# PBA Series
# Illuminated Pushbutton

## *Features/Benefits*

- ***Illuminated display***
- ***Small size***
- ***Cold lighting***
- ***Tactile feed back***

## *Typical Applications*

- ***Avionics***

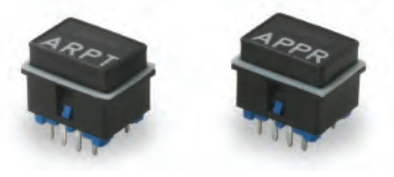


## Mechanical

ACTUATION FORCE: 5,5 N ± 0,5 N
MAXIMUM FORCE: 80 N
TRAVEL TO CONTACT: 1,2 ± 0,1 mm
OVERTRAVEL: >0,3 mm
TOTAL TRAVEL: 1,5 ± 0,1 mm
LIFE EXPECTANCY: $10^6$ operations 28 V - 10 mA
WEIGHT: 2 grams
VIBRATION: ± 0,45mm from 33 Hz to 75 Hz
ACCELERATION: 10 g max

## Electrical

CONTACTS: Gold plated
VOLTAGE: Max 100 V - Min 20 mV DC
CARRYING CURRENT: Max 250 mA - Min 50 µA
SWITCHING CURRENT: Max 50 mA - Min 50 µA
MAX SWITCHING POWER: 1 W
CONTACT RESISTANCE: < 50 Ω
DIELECTRIC STRENGTH: 500 V rms
INSULATION RESISTANCE (100 V): > 5000 M Ω
BOUNCE: < 3 ms
SWITCHING OF 2 POLES MATCHING: < 10 ms

## Environmental Data

STORAGE TEMPERATURE: -55˚C TO 85˚C
OPERATING TEMPERATURE: -30˚C TO 85˚C
TEMPERATURE OF KEY TO CAP: < Ambiant +25˚C
HUMIDITY TEST: 21 days (-40˚C - 93% HR)
ALTITUDE PRESSURE: From 20 hPa to 1070 hPa

## Soldering Data

WAVE SOLDERING: 260˚C / 5s
MANUAL SOLDERING: 350˚C / 2s
SEALING: According to IP64

## Plastic Material

Housing and Cap: UL-94 V0

**NOTE:** Specifications and materials listed above are for switches with standard options. For information on specific and custom switches, please contact Customer Service.

## Build-A-Switch

To order, simply select desired option from each category and place in the appropriate box.

P B A — [ ] — [ ] — [ ] — [ ] — [ ] — Repeat sequence for 2nd Marking — [ ] [ ]

**Designation**
**PBA** PBA Series

**Size**
**1** 9,5 x 14
**2** 11,5 x 14
**3** 14 x 14

**Marking Location**
**H** High
**M** Middle
**L** Low

**Type of Marking**
**T** Text / Legend
**S** Status Indicator

**LED Color**
**0** White λ
**1** Green λ 560 nm
**2** Yellow Green λ 568 nm
**3** Amber λ 590 nm
**4** Red λ 660 nm
**5** Other λ

**Display Type**

| | | LED Non-Illuminated | LED Illuminated |
|---|---|---|---|
| N | Text Marking | White | LED Color |
| | Background | Black | Black |
| S | Text Marking | Not visible | LED Color |
| | Background | Black | Black |
| R | Text Marking | White | LED Color |
| | Background | Red | Red |
| G | Text Marking | Green | Green |
| | Background | Black | Black |

**LED Supply or Type**
**AC** Alternative
**DC** Direct
**XX** for each marking
1:6 LEDs in parallel
for direct current

*Dimensions are shown: mm (inches)*
*Specifications and dimensions subject to change*

# PBA Series
# Illuminated Pushbutton

## LIGHTING DATA

The legends of function and the status indicator can be illuminated separately.

| Color | | Amber | Green |
|---|---|---|---|
| Wave Length | | 586 < λ < 592 | 555 < l < 560 |
| Current Max | | 80 mA | 80 mA |
| Chromaticity | X<br>Y | 0,54 < X < 0,58<br>0,40 < Y < 0,44 | 0,30 < X < 0,40<br>0,6 < Y |
| Contrast Min. | | 1,2 | 0,85 |

For other colors and displays, please contact Customer Service.

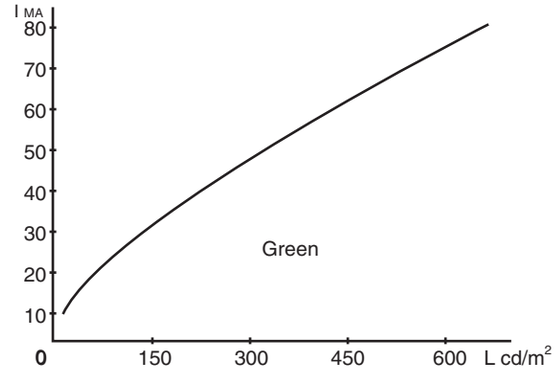


LIGHTING / CURRENT

## DIMENSIONS (applicable for any size)

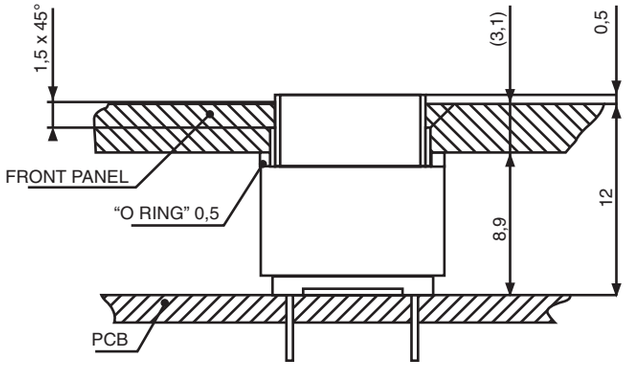


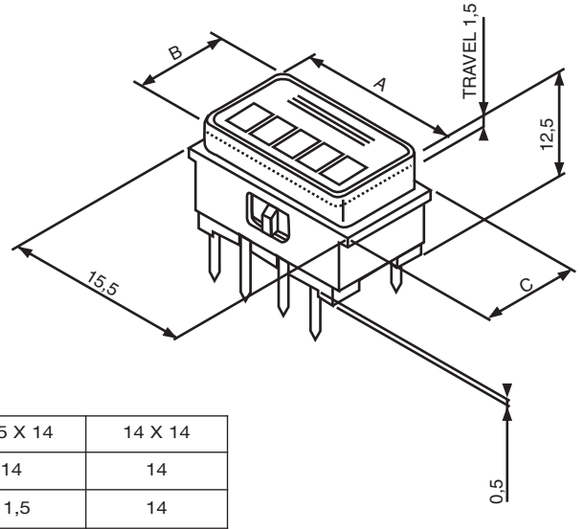


| | 9,5 X 14 | 11,5 X 14 | 14 X 14 |
|---|---|---|---|
| A | 14 | 14 | 14 |
| B | 9,5 | 11,5 | 14 |
| C | 11 | 11,5 | 15,5 |

Tolerance: ± 0,1 mm

*Dimensions are shown: mm*
*Specifications and dimensions subject to change*

## LED MODULE LAYOUT

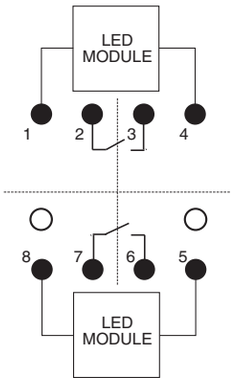


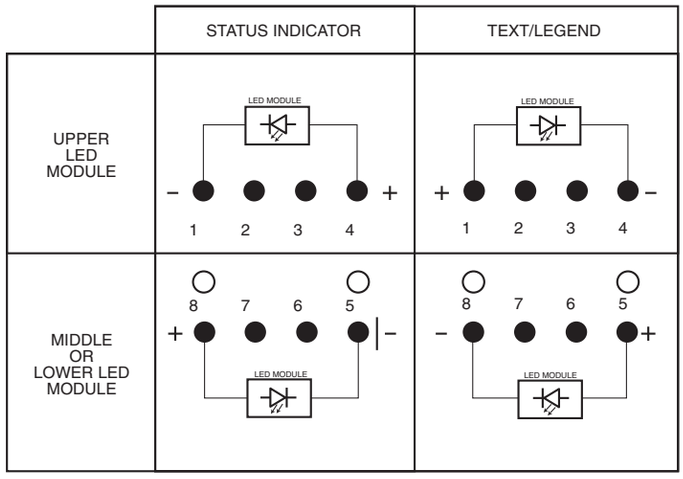


## PCB Layout

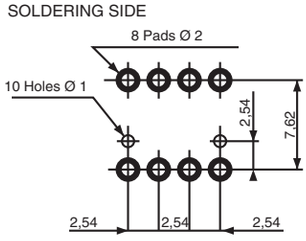


TOLERANCE: ± 0,1

APPLICABLE FOR SIZE
- 9,5 x 14 mm
- 11,5 x 14 mm

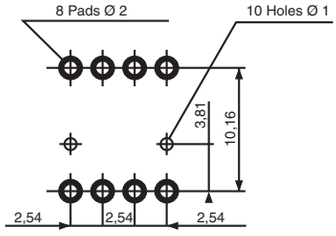


APPLICABLE FOR SIZE
-14 x 14 mm

## TACTILE EFFECT

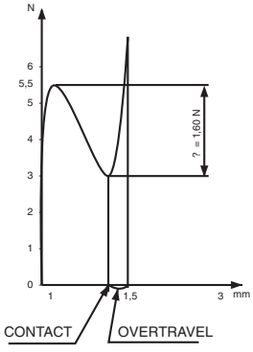


TRAVEL
- TRAVEL TO CONTACT: 1,2 ± 0,1 mm
- OVERTRAVEL: > 0,3 mm
- TOTAL TRAVEL: 1,5 ± 0,1 mm

FORCE
- ACTUATOR FORCE: 5,5 N ± 0,5 N
- TACTILE FEELING: 1,6 N

1 or 2 markings are available in any combination of text / legend or status indicator.

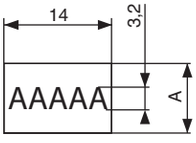


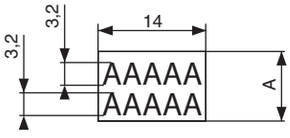


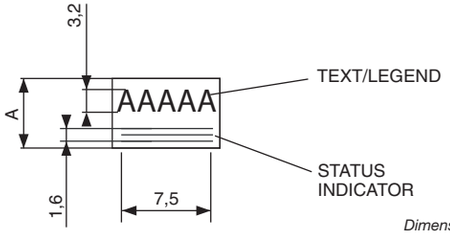


A = 9,5 or 11,5 or 14mm

*Dimensions are shown: mm*
*Specifications and dimensions subject to change*

# PB Series
# Single Pole and Multi-Key Pushbutton Switches

## *Features/Benefits*

- ***Momentary or latching options***
- ***Reliable contact design***
- ***2, 4, and 6 pole configurations***
- ***Long travel and extended life cycles***

## *Typical Applications*

- ***Appliances***
- ***Audio and visual equipment***
- ***Consumer electronics***
- ***Industrial equipment***

## Specifications

CONTACT RATING: 0.3A @ 30 VDC

INITIAL CONTACT RESISTANCE: 30 m ohms max.

INSULATION RESISTANCE: 100 M ohms min.

DIELECTRIC STRENGTH: 500 V AC (50-60 Hz) between open terminals and between the frame and terminal.

OPERATING LIFE: 10,000 cycles without load

OPERATING FORCE:
250 ± 100 gf (2.45 ± 0.98N)

LOCK TRAVEL: 2 ± 0.3 mm

TOTAL TRAVEL: 3 ± 0.3 mm

OPERATING TEMPERATURE: -20˚C to 70˚C

## Materials

CASE: PC (UL 94HB)

PLASTIC CLIP: POM (UL 94HB)

SPRING: SUS

KNOB: POM

TERMINAL: Silver plated

## PB-22D01-L 2PDT LOCK / LATCHING

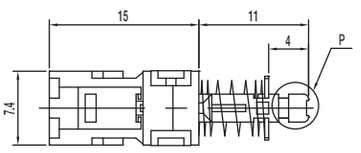


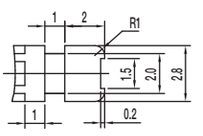


P DETAIL 2 : 1

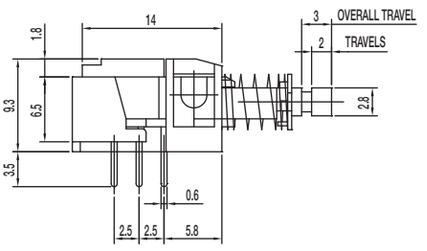


2P — 2T

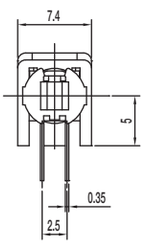


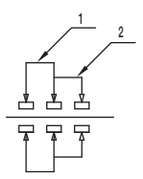


SCHEMATIC

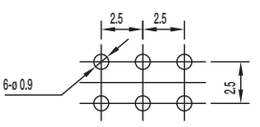


PIERCING PLAN

# PB Series
# Single Pole and Multi-Key Pushbutton Switches

## PB-42D01-L 4PDT LOCK / LATCHING

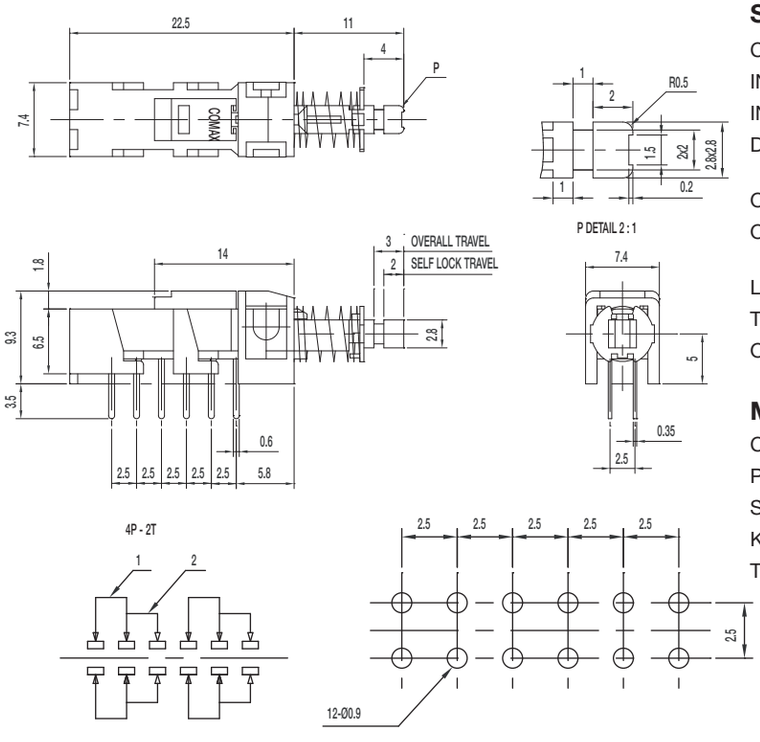


### Specifications

CONTACT RATING: 0.3A @ 30 VDC

INITIAL CONTACT RESISTANCE: 30 m ohms max.

INSULATION RESISTANCE: 100 M ohms min.

DIELECTRIC STRENGTH: 500 V AC (50-60 Hz) between open terminals and between the frame and terminal.

OPERATING LIFE: 10,000 cycles without load

OPERATING FORCE:
280 ± 100 gf

LOCK TRAVEL: 2 ± 0.3 mm

TOTAL TRAVEL: 3 ± 0.3 mm

OPERATING TEMPERATURE: -20˚C to 70˚C

### Materials

CASE: PC (UL 94HB)

PLASTIC CLIP: POM (UL 94HB)

SPRING: SUS

KNOB: POM

TERMINAL: Silver plated

## PB-62D01-L 6PDT LOCK / LATCHING

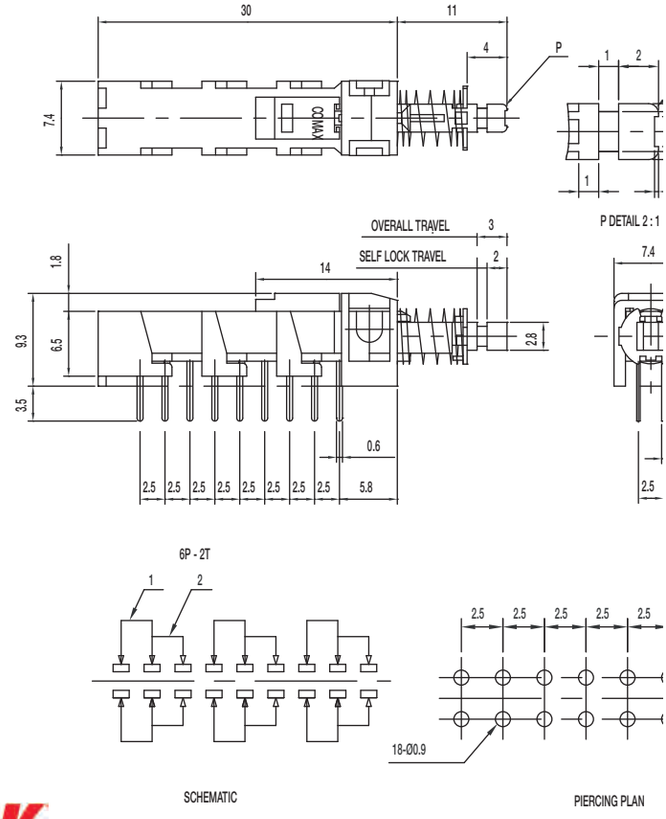


### Specifications

CONTACT RATING: 0.3A @ 30 VDC

INITIAL CONTACT RESISTANCE: 30 m ohms max.

INSULATION RESISTANCE: 100 M ohms min.

DIELECTRIC STRENGTH: 500 V AC (50-60 Hz) between open terminals and between the frame and terminal.

OPERATING LIFE: 10,000 cycles without load

OPERATING FORCE:
300 ± 100 gf (2.94 ± 0.98N)

LOCK TRAVEL: 2 ± 0.3 mm

TOTAL TRAVEL: 3 ± 0.3 mm

OPERATING TEMPERATURE: -20˚C to 70˚C

### Materials

CASE: PC (UL 94HB)

PLASTIC CLIP: POM (UL 94HB)

SPRING: SUS

KNOB: POM

TERMINAL: Silver plated

*Dimensions are shown: mm*
*Specifications and dimensions subject to change*

## PB-22D01-F 2PDT NON-LOCK / MOMENTARY

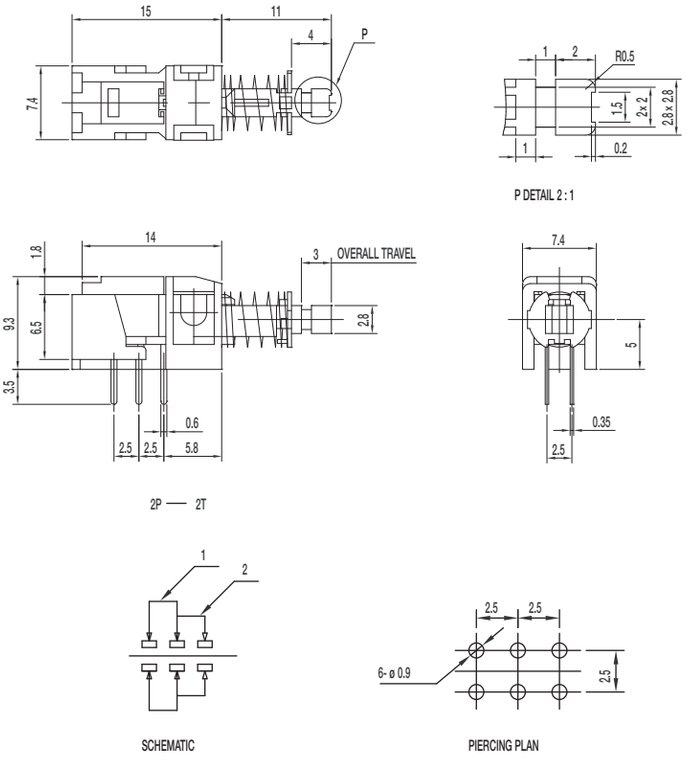


### Specifications

CONTACT RATING: 0.3A @ 30 VDC

INITIAL CONTACT RESISTANCE: 30 m ohms max.

INSULATION RESISTANCE: 100 M ohms min.

DIELECTRIC STRENGTH: 500 V AC (50-60 Hz) between open terminals and between the frame and terminal.

OPERATING LIFE: 10,000 cycles without load

OPERATING FORCE:
250 ± 100 gf (2.45 ± 0.98N)

TOTAL TRAVEL: 3 ± 0.3 mm

OPERATING TEMPERATURE: -20˚C to 70˚C

### Materials

CASE: PC (UL 94HB)

PLASTIC CLIP: POM (UL 94HB)

SPRING: SUS

KNOB: POM

TERMINAL: Silver plated

## PB-42D01-F 4PDT NON-LOCK / MOMENTARY

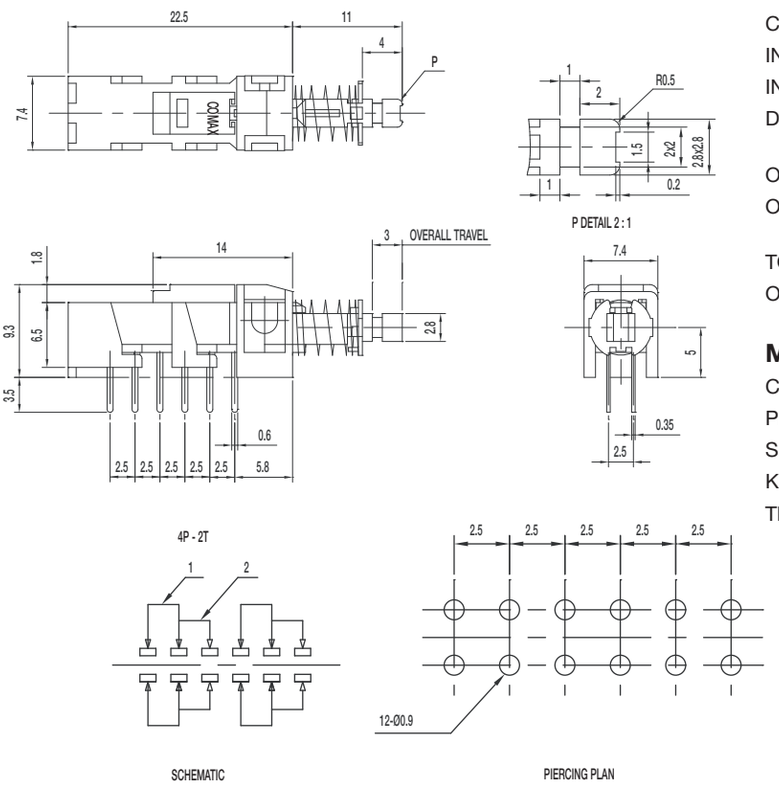


### Specifications

CONTACT RATING: 0.3A @ 30 VDC

INITIAL CONTACT RESISTANCE: 30 m ohms max.

INSULATION RESISTANCE: 100 M ohms min.

DIELECTRIC STRENGTH: 500 V AC (50-60 Hz) between open terminals and between the frame and terminal.

OPERATING LIFE: 10,000 cycles without load

OPERATING FORCE:
280 ± 100 gf (2.477 ± 0.98N)

TOTAL TRAVEL: 3 ± 0.3 mm

OPERATING TEMPERATURE: -20˚C to 70˚C

### Materials

CASE: PC (UL 94HB)

PLASTIC CLIP: POM (UL 94HB)

SPRING: SUS

KNOB: POM

TERMINAL: Silver plated

# PB Series
# Single Pole and Multi-Key Pushbutton Switches

## PB-62D01-F 6PDT NON-LOCK / MOMENTARY

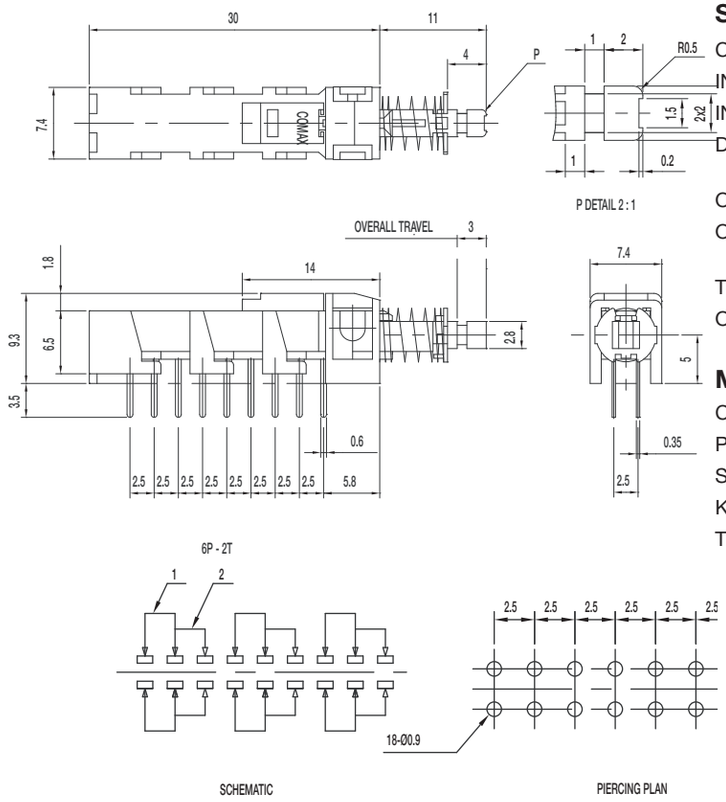


### Specifications

CONTACT RATING: 0.3A @ 30 VDC

INITIAL CONTACT RESISTANCE: 30 m ohms max.

INSULATION RESISTANCE: 100 M ohms min.

DIELECTRIC STRENGTH: 500 V AC (50-60 Hz) between open terminals and between the frame and terminal.

OPERATING LIFE: 10,000 cycles without load

OPERATING FORCE:
300 ± 100 gf (2.94 ± 0.98N)

TOTAL TRAVEL: 3 ± 0.3 mm

OPERATING TEMPERATURE: -20˚C to 70˚C

### Materials

CASE: PC (UL 94HB)

PLASTIC CLIP: POM (UL 94HB)

SPRING: SUS

KNOB: POM

TERMINAL: Silver plated

## PB-22G02-L 2PDT LOCK / LATCHING

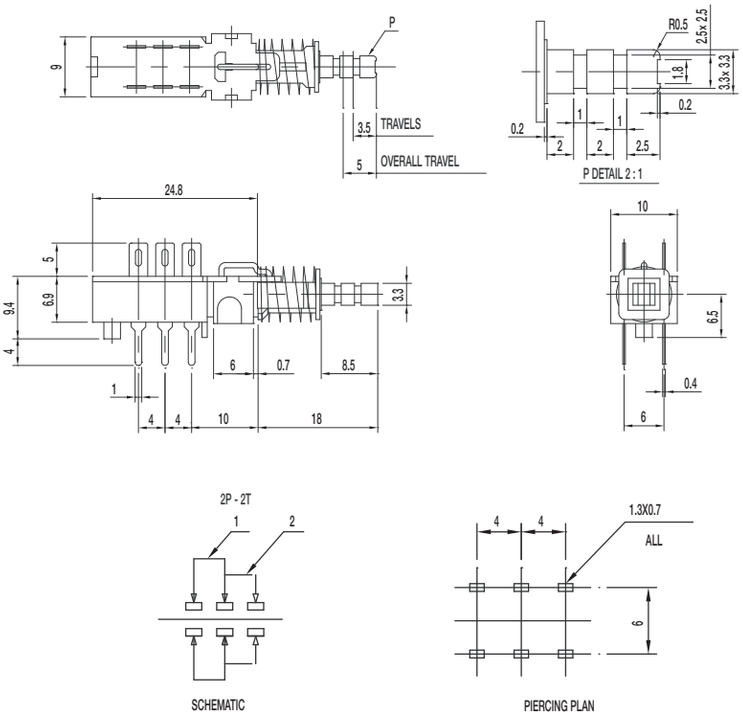


### Specifications

CONTACT RATING: 1A @ 25 VDC

INITIAL CONTACT RESISTANCE: 30 m ohms max.

INSULATION RESISTANCE: 100 M ohms min.

DIELECTRIC STRENGTH: 500 V AC (50-60 Hz) between open terminals and between the frame and terminal.

OPERATING LIFE: 10,000 cycles without load

OPERATING FORCE:
350 ± 150 gf (3.43 ± 1.47N)

LOCK TRAVEL: 3.5 ± 0.3mm

TOTAL TRAVEL: 5 ± 0.3 mm

OPERATING TEMPERATURE: -20˚C to 70˚C

### Materials

CASE: PC (UL 94HB)

SPRING: SUS

KNOB: POM

TERMINAL: Silver plated

## PB-42G02-L 4PDT LOCK / LATCHING

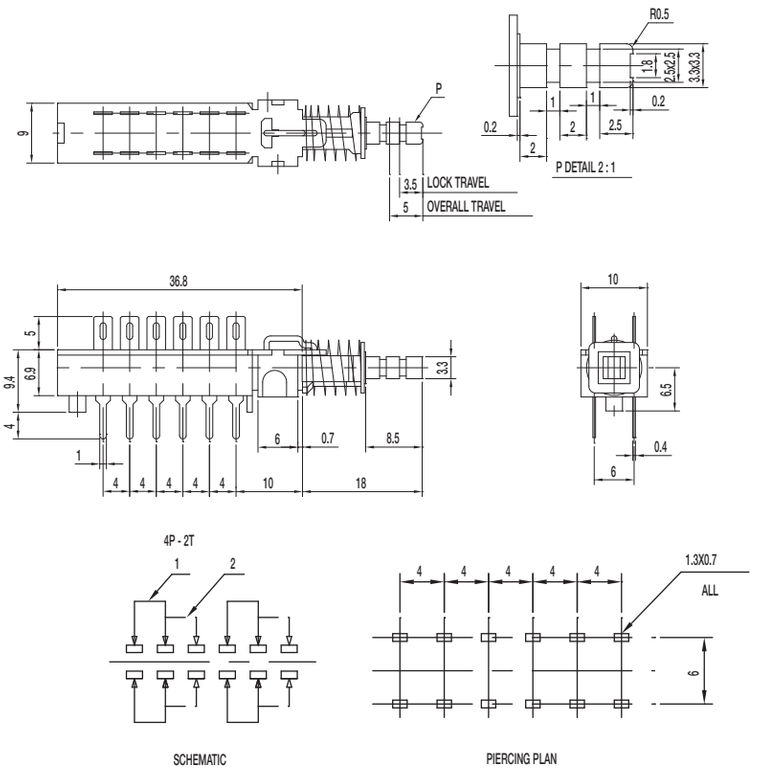


### Specifications

CONTACT RATING: 1A @ 25 VDC

INITIAL CONTACT RESISTANCE: 30 m ohms max.

INSULATION RESISTANCE: 100 M ohms min.

DIELECTRIC STRENGTH: 500 V AC (50-60 Hz) between open terminals and between the frame and terminal.

OPERATING LIFE: 10,000 cycles without load

OPERATING FORCE:
400 ± 150 gf (3.92 ± 1.47N)

LOCK TRAVEL: 3.5 ± 0.3mm

TOTAL TRAVEL: 5 ± 0.3 mm

OPERATING TEMPERATURE: -20˚C to 70˚C

### Materials

HOUSING: PC (UL 94HB)

SPRING: SUS

KNOB: POM

TERMINAL: Silver plated

## PB-62G02-L DPDT LOCK / LATCHING

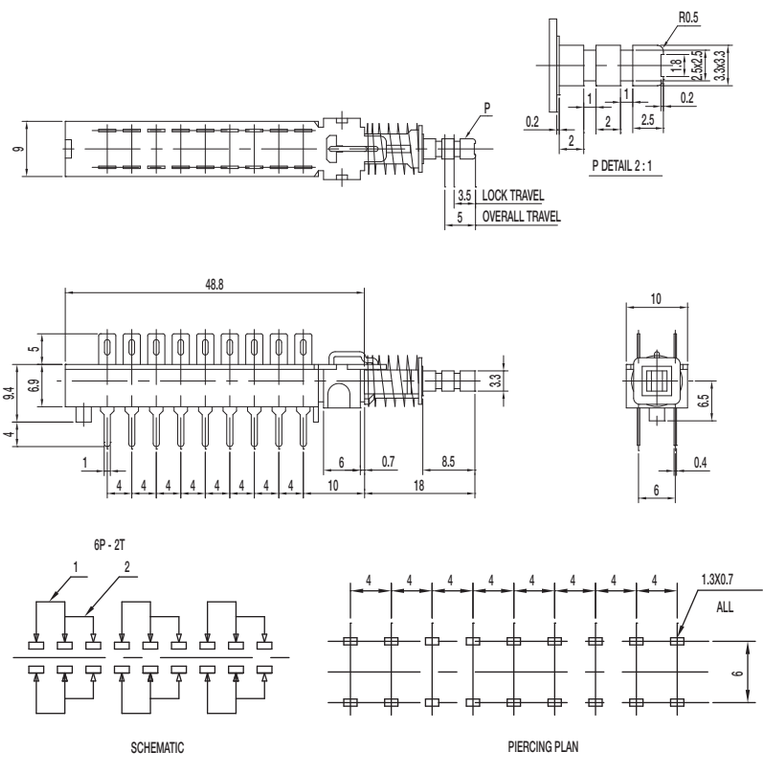


### Specifications

CONTACT RATING: 1A @ 25 VDC

INITIAL CONTACT RESISTANCE: 30 m ohms max.

INSULATION RESISTANCE: 100 M ohms min.

DIELECTRIC STRENGTH: 500 V AC (50-60 Hz) between open terminals and between the frame and terminal.

OPERATING LIFE: 10,000 cycles without load

OPERATING FORCE:
450 ± 150 gf

LOCK TRAVEL: 3.5 ± 0.3mm

TOTAL TRAVEL: 5 ± 0.3 mm

OPERATING TEMPERATURE: -20˚C to 70˚C

### Materials

HOUSING: PC (UL 94HB)

SPRING: SUS

KNOB: POM

TERMINAL: Silver plated

# PB Series
# Single Pole and Multi-Key Pushbutton Switches

## PB-22G02-F DPDT NON-LOCK / MOMENTARY

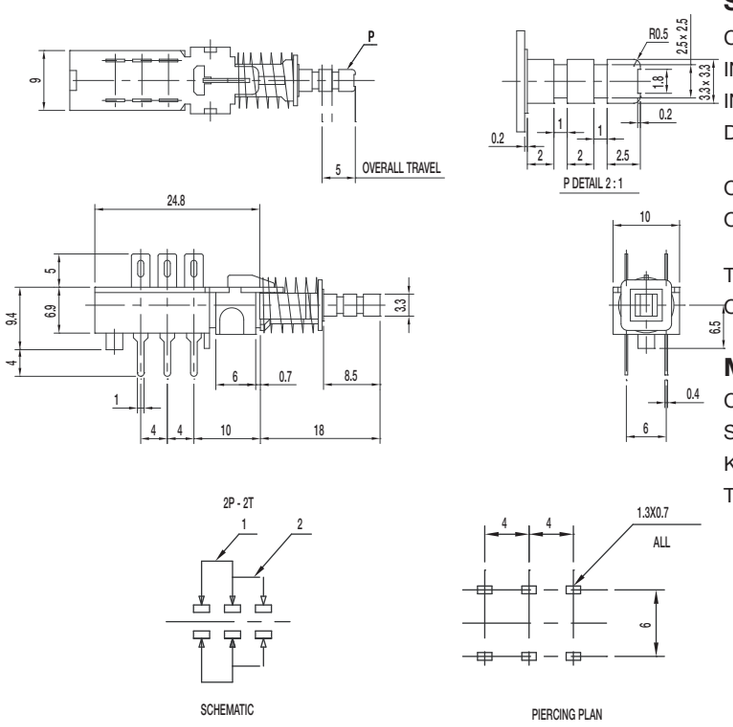


### Specifications

CONTACT RATING: 1A @ 25 VDC

INITIAL CONTACT RESISTANCE: 30 m ohms max.

INSULATION RESISTANCE: 100 M ohms min.

DIELECTRIC STRENGTH: 500 V AC (50-60 Hz) between open terminals and between the frame and terminal.

OPERATING LIFE: 10,000 cycles without load

OPERATING FORCE:
350 ± 150 gf (3.43 ± 1.47N)

TOTAL TRAVEL: 5 ± 0.3 mm

OPERATING TEMPERATURE: -20˚C to 70˚C

### Materials

CASE: PC (UL 94HB)

SPRING: SUS

KNOB: POM

TERMINAL: Silver plated

## PB-42G02-F 4PDT NON-LOCK / MOMENTARY

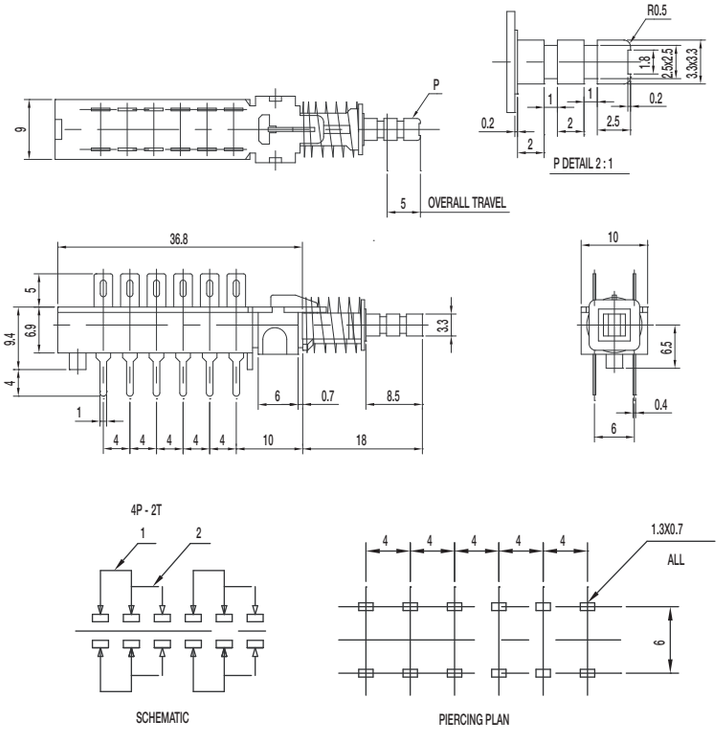


### Specifications

CONTACT RATING: 1A @ 25 VDC

INITIAL CONTACT RESISTANCE: 30 m ohms max.

INSULATION RESISTANCE: 100 M ohms min.

DIELECTRIC STRENGTH: 500 V AC (50-60 Hz) between open terminals and between the frame and terminal.

OPERATING LIFE: 10,000 cycles without load

OPERATING FORCE:
400 ± 150 gf (3.92 ± 1.47N)

TOTAL TRAVEL: 5 ± 0.3 mm

OPERATING TEMPERATURE: -20˚C to 70˚C

### Materials

HOUSING: PC (UL 94HB)

SPRING: SUS

KNOB: POM

TERMINAL: Silver plated

## PB-62G02-F 6PDT NON-LOCK / MOMENTARY

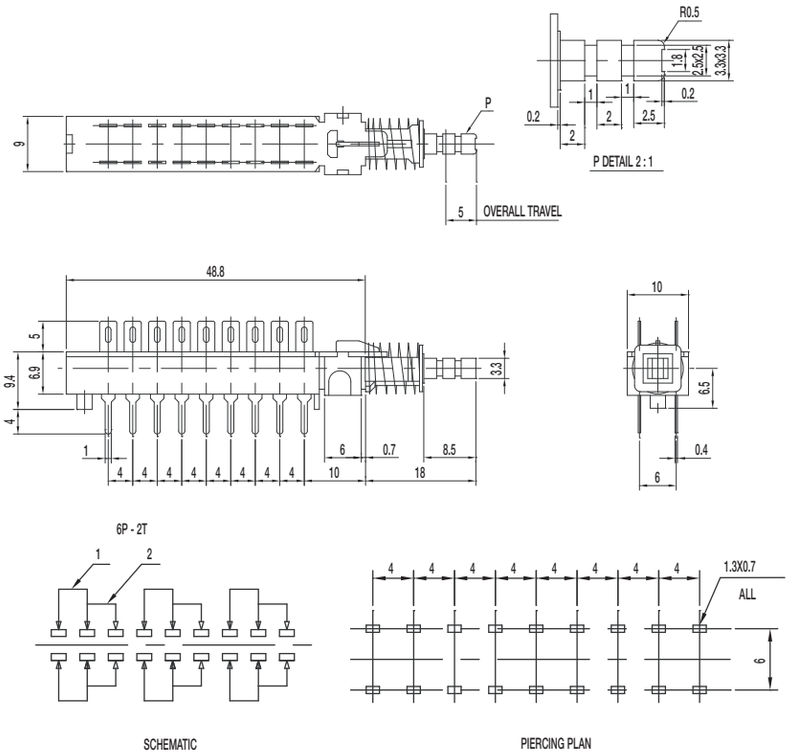


### Specifications

CONTACT RATING: 1A @ 25 VDC

INITIAL CONTACT RESISTANCE: 30 m ohms max.

INSULATION RESISTANCE: 100 M ohms min.

DIELECTRIC STRENGTH: 500 V AC (50-60 Hz) between open terminals and between the frame and terminal.

OPERATING LIFE: 10,000 cycles without load

OPERATING FORCE:
450 ± 150 gf (4.41 ± 1.47N)

TOTAL TRAVEL: 5 ± 0.3 mm

OPERATING TEMPERATURE: -20˚C to 70˚C

### Materials

HOUSING: PC (UL 94HB)

SPRING: SUS

KNOB: POM

TERMINAL: Silver plated

## PB Multi-Key Series

P B — K — — — — — — — —

**Key**
- **1K** 1K
- **2K** 2K
- **3K** 3K
- **4K** 4K
- **5K** 5K

**Travel**
- **G** 3.5 mm
- **D** 2 mm

**Key Pitch**
- **0** 0
- **1** 10
- **2** 12.5
- **3** 15
- **4** 17.5
- **5** 20
- **6** 25
- **7** 30

**Mounting Hole**
- **A** M3 x 0.5
- **B** 3.2
- **C** No mounting hole

**Poles**
- **2** 2 poles
- **4** 4 poles
- **6** 6 poles

**Operating Type**
- **E** Release
- **F** Non-lock
- **L** Self-lock
- **T** Interlock
- **XF** All non-lock
- **XT** All self-lock
- **XL** All interlock

**Terminal Shape**
- **P**
- **X**
- **N**

**Contact Function**
- **S** Shorting
- **NS** Non-shorting

*Dimensions are shown: mm*
*Specifications and dimensions subject to change*

# PB Series
# Single Pole and Multi-Key Pushbutton Switches

## PB Multi-Key Series

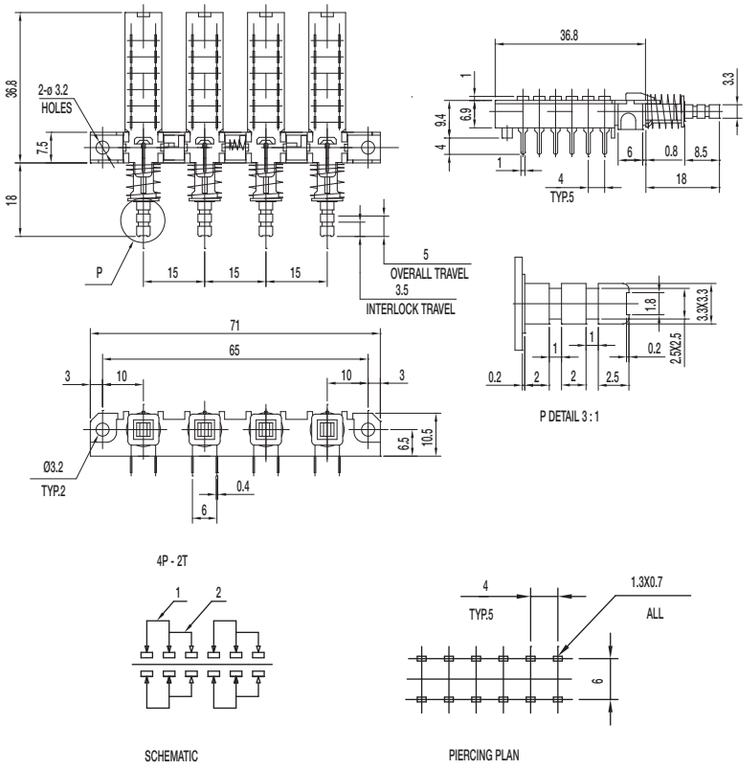


### Specifications

CONTACT RATING: 0.3A @ 30 VDC

INITIAL CONTACT RESISTANCE: 30 m ohms max.

INSULATION RESISTANCE: 100 M ohms min.

DIELECTRIC STRENGTH: 500 V AC (50-60 Hz) between open terminals and between the frame and terminal.

OPERATING LIFE: 10,000 cycles without load

OPERATING FORCE:
250 ± 100 gf (2.45 ± 0.98N)

TOTAL TRAVEL: 3 ± 0.3 mm

OPERATING TEMPERATURE: -20˚C to 70˚C

### Materials

CASE: PC (UL 94HB)

PLASTIC CLIP: POM (UL 94HB)

SPRING: SUS

KNOB: POM

TERMINAL: Silver plated

# PS-12G Series
# Pushbutton Switches

## *Features/Benefits*

- ***Latching pushbutton***
- ***Non-shorting with lock***
- ***5 mm travel***
- ***SPDT***

## *Typical Applications*

- ***Automotive interior lighting***
- ***Computer peripherals***
- ***Appliances***

| PART NUMBER | PACKAGING | SCHEMATIC |
|---|---|---|
| PS-12G01 | 200 pieces | |

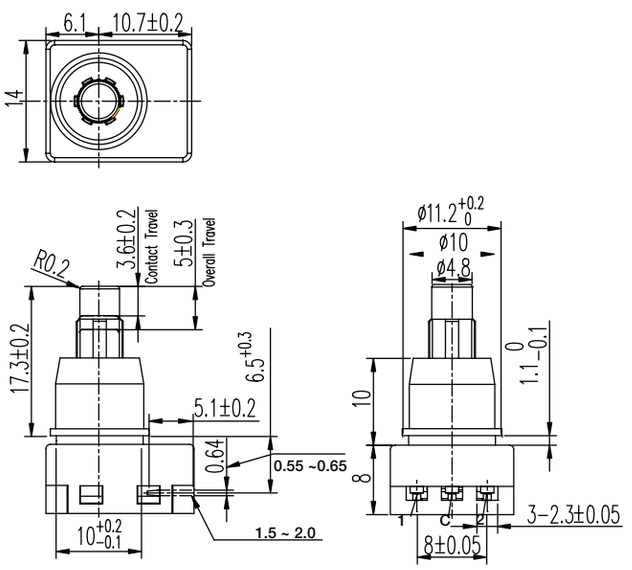


## Dimensions

FOOTPRINT: 14 X 16.8 mm

HEIGHT: 18 mm

## Specifications

CONTACT RATING: 1A @ 14 VDC

INITIAL CONTACT RESISTANCE: 100 m ohms max.

INSULATION RESISTANCE: 100 M ohms min.

DIELECTRIC STRENGTH: 500 V AC (50-60 Hz) between open terminals and between the frame and terminal.

OPERATING LIFE: 20,000 cycles with load

OPERATING FORCE: 400 ± 100 gf

OPERATING POSITION: 3.6 ± 0.2 mm

TOTAL TRAVEL: 5 ± 0.3 mm

OPERATING TEMPERATURE: -20˚C to 70˚C

## Materials

KNOB: POM (UL 94HB)

HOUSING: PBT (UL 94V-0)

COVER: PBT (UL 94V-0)

ROTOR: PBT (UL 94V-0)

SLIDER: POM (UL 94HB)

TERMINAL: Phospher bronze, silver plated

SPRING: Stainless steel

CONTACT: Phospher bronze, silver plated

# PS-12G Series
# Pushbutton Switches

| PART NUMBER | PACKAGING | SCHEMATIC |
|---|---|---|
| PS-12G03 | 200 pieces | 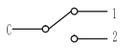 |

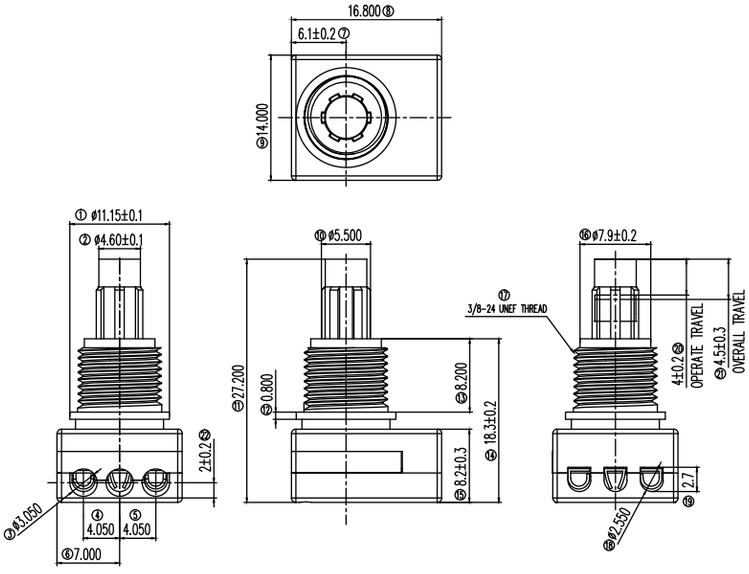


TYCO .062 Commercial Pin
and Socket Connector
PT# 770983-1

## Dimensions

FOOTPRINT: 14 X 16.8 mm

HEIGHT: 18.3 mm

## Specifications

CONTACT RATING: 2.2A @ 14.5 VDC

INITIAL CONTACT RESISTANCE: 50 m ohms max.

INSULATION RESISTANCE: 100 M ohms min.

DIELECTRIC STRENGTH: 500 V AC (50-60 Hz) between open terminals and between the frame and terminal.

OPERATING LIFE: 20,000 cycles with load

OPERATING FORCE: 650 ± 300 gf

OPERATING POSITION: 4.00 ± 0.2 mm

TOTAL TRAVEL: 4.5 ± 0.3 mm

OPERATING TEMPERATURE: -40˚C to 85˚C

## Materials

KNOB: POM (UL 94HB)

HOUSING: PBT & PA (UL 94V-0)

COVER: PBT (UL 94V-0)

ROTOR: PBT (UL 94V-0)

SLIDER: POM (UL 94HB)

TERMINAL: Brass, silver plated

SPRING: Stainless steel

CONTACT: Phospher bronze, silver plated

# PS-22 Series
# Subminiature Pushbutton Switches

## *Features/Benefits*

- ***Compact miniature push switch***
- ***Momentary or latching options***
- ***Shorting or non-shorting***
- ***DPDT***

## *Typical Applications*

- ***Industrial***
- ***Automotive***
- ***Audio and visual equipment***

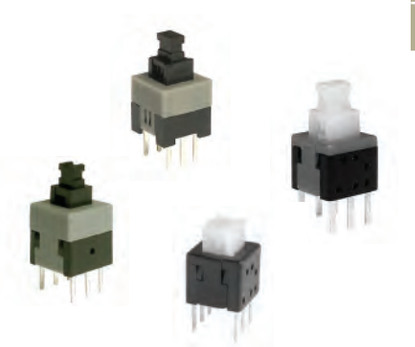

| PART NUMBER | PACKAGING | SCHEMATIC |
|---|---|---|
| PS-2203-L NS PA | 1,000 pieces | 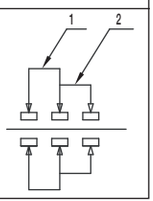 |
| PS-2203-F NS PA | 1,000 pieces | |

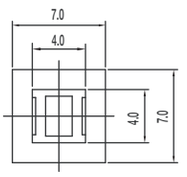


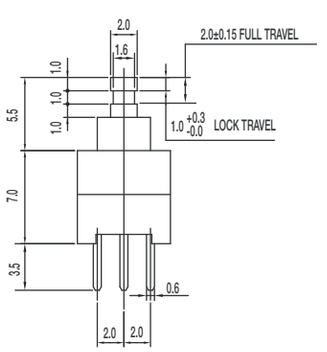


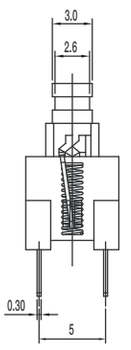


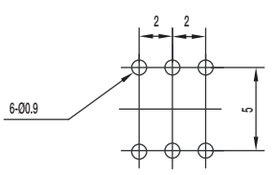


PIERCING PLAN

## Dimensions

FOOTPRINT: 7.0 x 7.0 mm

HEIGHT: 12.5 mm

## Specifications

CONTACT RATING: 0.1A @ 30 VDC

INITIAL CONTACT RESISTANCE: 30 m ohms max.

INSULATION RESISTANCE: 100 M ohms min.

DIELECTRIC STRENGTH: 500 V AC (50-60 Hz) between open terminals and between the frame and terminal.

OPERATING LIFE: 10,000 cycles with load

OPERATING FORCE:
200 ± 100 gf (1.96 ± 0.98N)

LOCK TRAVEL: 1 mm

TOTAL TRAVEL: 2 mm

OPERATING TEMPERATURE: -20˚C to 70˚C

## Materials

KNOB: POM Black

HOUSING: PA Black

COVER: POM Grey (latch) / White (Mom)

TERMINAL: Brass, silver plated

CONTACT CLIP: Phosphor bronze., silver plated

SPRING: Stainless steel

HOOK LOCK: Stainless steel (latch)

# PS-22 Series
# Subminiature Pushbutton Switches

| PART NUMBER | PACKAGING | SCHEMATIC |
|---|---|---|
| PS-2206-L NS PA | 1,000 pieces | 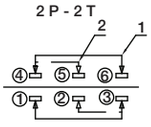 |
| PS-2206-F NS PA | 1,000 pieces | |



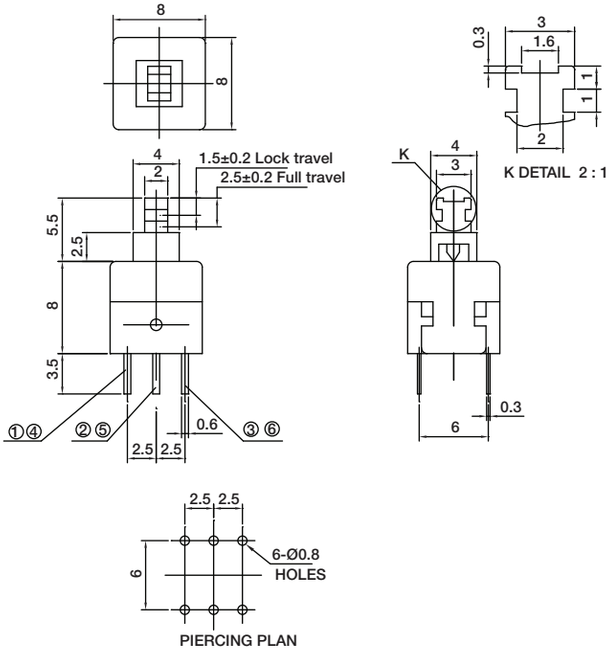



## Dimensions

FOOTPRINT: 8.0 x 8.0 mm

HEIGHT: 13.5 mm

## Specifications

CONTACT RATING: 0.1A @ 30 VDC

INITIAL CONTACT RESISTANCE: 70 m ohms max.

INSULATION RESISTANCE: 100 M ohms min.

DIELECTRIC STRENGTH: 500 V AC (50-60 Hz) between open terminals and between the frame and terminal.

OPERATING LIFE: 10,000 cycles with load

OPERATING FORCE:
200 ± 100 gf (1.96 ± 0.98N)

LOCK TRAVEL: 1.5 mm

TOTAL TRAVEL: 2.5 mm

OPERATING TEMPERATURE: -20˚C to 70˚C

## Materials

KNOB: POM Black

HOUSING: PA Black

COVER: POM Grey (latch) / White (Mom)

TERMINAL: Brass, silver plated

CONTACT CLIP: Phosphor bronze., silver plated

SPRING: Stainless steel

HOOK LOCK: Stainless steel (latch)

| PART NUMBER | PACKAGING | SCHEMATIC |
|---|---|---|
| PS-2214-L NS PA | 1,000 pieces | 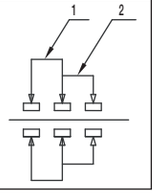 |
| PS-2214-F NS PA | 1,000 pieces | |



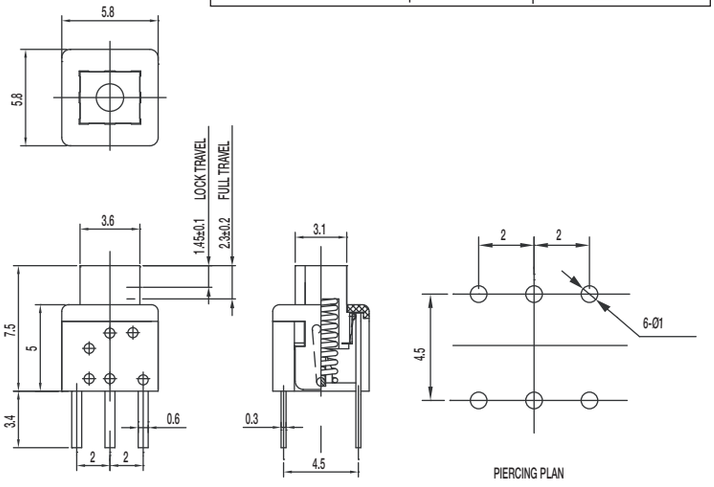



## Dimensions

FOOTPRINT: 5.8 x 5.8 mm

HEIGHT: 7.5 mm

## Specifications

CONTACT RATING: 0.1A @ 30 VDC

INITIAL CONTACT RESISTANCE: 80 m ohms max.

INSULATION RESISTANCE: 100 M ohms min.

DIELECTRIC STRENGTH: 500 V AC (50-60 Hz) between open terminals and between the frame and terminal.

OPERATING LIFE: 10,000 cycles with load

OPERATING FORCE:
150 ± 50 gf (1.47 ± 0.49N)

LOCK TRAVEL: 1.45 mm

TOTAL TRAVEL: 2.3 mm

OPERATING TEMPERATURE: -20˚C to 70˚C

## Materials

KNOB: POM Natural (latch) / PA black

HOUSING: PA Black

COVER: PA Black

TERMINAL: Brass, silver plated

CONTACT CLIP: Phosphor bronze, silver clad

SPRING: Stainless steel

HOOK LOCK: Stainless steel (latch)

*Dimensions are shown: mm*
*Specifications and dimensions subject to change*

# PS-22 Series
# Subminiature Pushbutton Switches

| PART NUMBER | PACKAGING | SCHEMATIC |
|---|---|---|
| PS-221605-L NS | 1,000 pieces | 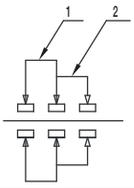 |
| PS-221605-F NS | 1,000 pieces | |

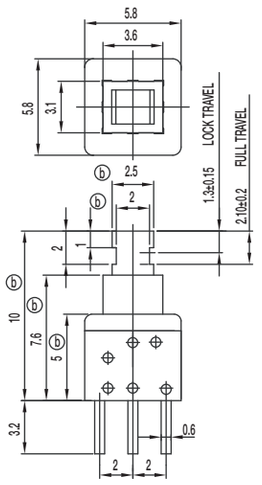


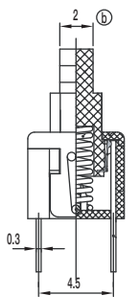


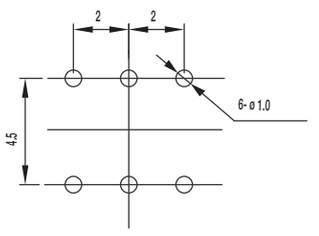


PIERCING PLAN

## Dimensions

FOOTPRINT: 5.8 x 5.8 mm

HEIGHT: 10 mm

## Specifications

CONTACT RATING: 0.1A @ 30 VDC / 2A @ 2 VDC

INITIAL CONTACT RESISTANCE: 80 m ohms max.

INSULATION RESISTANCE: 100 M ohms min.

DIELECTRIC STRENGTH: 500 V AC (50-60 Hz) between open terminals and between the frame and terminal.

OPERATING LIFE: 10,000 cycles with load

OPERATING FORCE:
150 ± 50 gf (1.47 ± 0.49N)

LOCK TRAVEL: 1.3 mm

TOTAL TRAVEL: 2.1 mm

OPERATING TEMPERATURE: -20˚C to 70˚C

## Materials

KNOB: POM Natural

HOUSING: PA Black

COVER: PC Grey

TERMINAL: Bras, silver plated

CONTACT CLIP: Phosphor bronze, silver clad

SPRING: Stainless steel

HOOK LOCK: Stainless steel (latch)

# PS Series
# Miniature Pushbutton Switches

### *Features/Benefits*

- ***Miniature size***
- ***Momentary or latching options***
- ***Broad range of products***

### *Typical Applications*

- ***Industrial***
- ***Automotive***
- ***Audio and visual equipment***
- ***Telecommunications***

## PS-22I05 DPDT NON-SHORTING

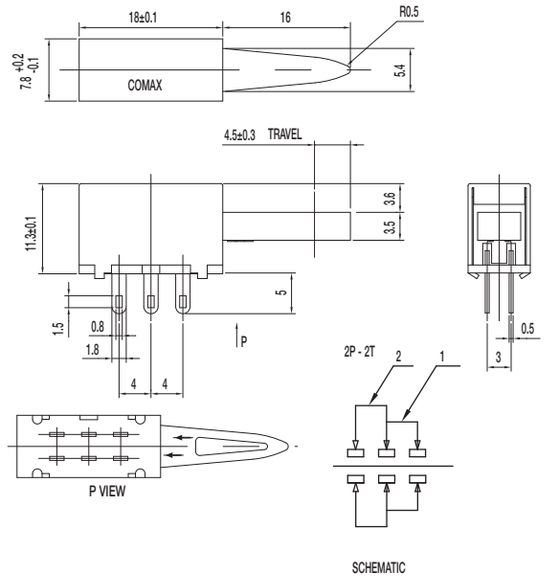


### Specifications

CONTACT RATING: 0.3A @ 30 VDC

INITIAL CONTACT RESISTANCE: 30 m ohms max.

INSULATION RESISTANCE: 100 M ohms min.

DIELECTRIC STRENGTH: 500 V AC (50-60 Hz) between open terminals and between the frame and terminal.

OPERATING LIFE: 10,000 cycles with load

OPERATING FORCE: 400 ± 150 gf (3.92 ± 1.47N)

TOTAL TRAVEL: 4.5 ± 0.3 mm

OPERATING TEMPERATURE: -20˚C to 70˚C

### Materials

FRAME: SECC

KNOB: POM (UL 94HB)

CONTACT PLATE: Silver clad

SPRING: SUS

TERMINAL: Silver plated

## PS-12C02-F NS SPST NON-SHORTING

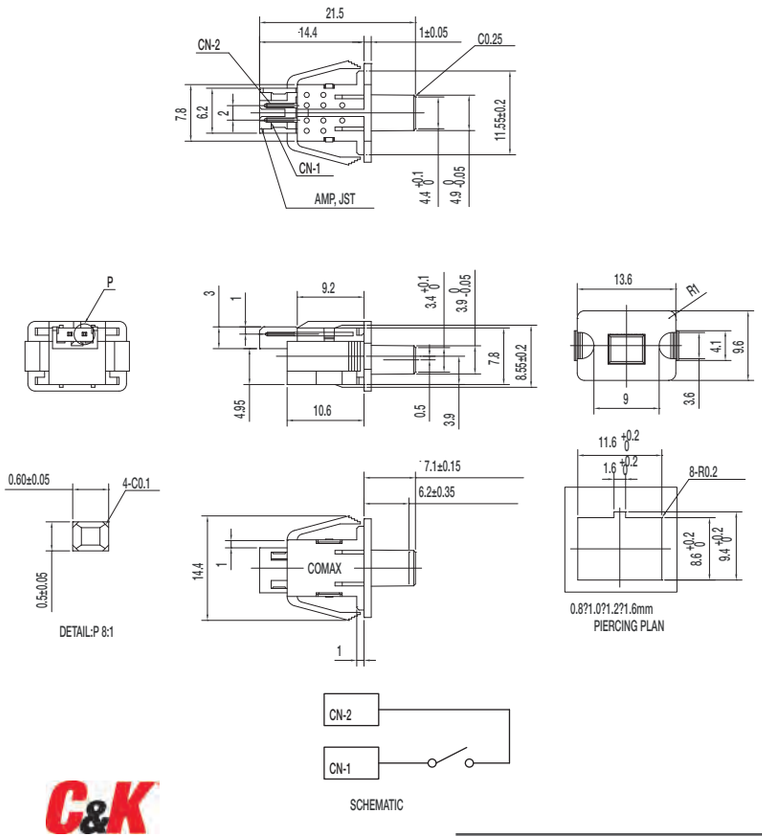


### Specifications

CONTACT RATING: 100 µ A @ 3 VDC min. / 10mA @ 5 VDC max

INITIAL CONTACT RESISTANCE: 100 m ohms max.

INSULATION RESISTANCE: 100 M ohms min.

DIELECTRIC STRENGTH: 250 V AC (50-60 Hz) between open terminals and between the frame and terminal.

OPERATING LIFE: 100,000 cycles with load

OPERATING FORCE: 50 ± 15 gf (0.49 ± 0.147N)

PRE-TRAVEL: 6.20 ± 0.35 mm

OPERATING TEMPERATURE: -40˚C to 85˚C

### Materials

KNOB: POM (UL 94HB)

COVER: PA (UL 94V-0)

HOUSING: PA (UL 94V-0)

SPRING: SUS

TERMINAL: Silver plated

*Dimensions are shown: mm*
*Specifications and dimensions subject to change*

## PS-32C02-F NS 1P3T NON-SHORTING

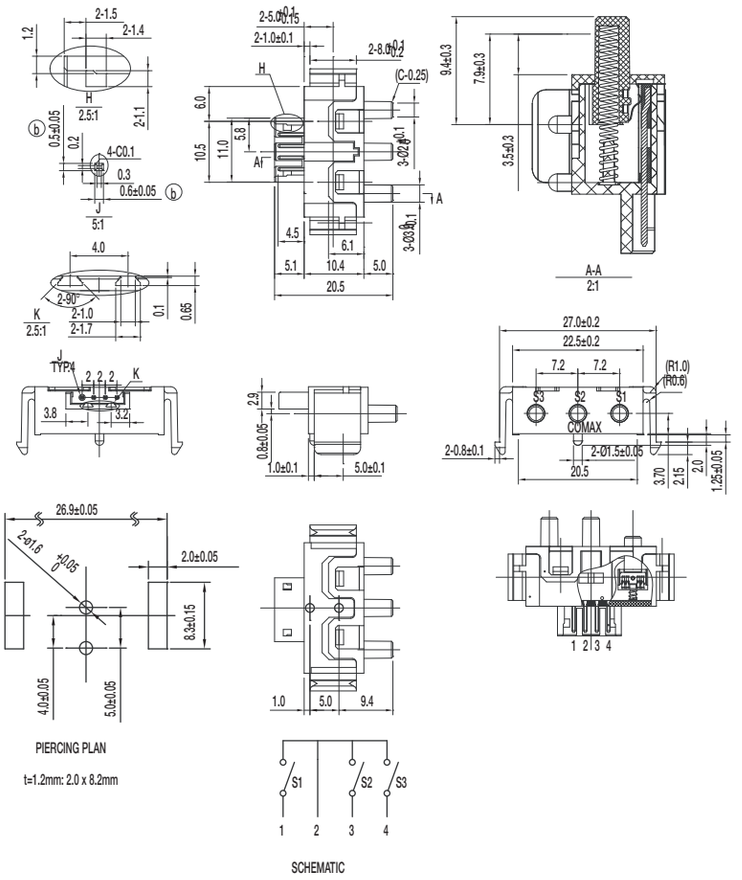


### Specifications

CONTACT RATING: 100 µ A @ 3 VDC min. / 10mA @ 5 VDC max

INITIAL CONTACT RESISTANCE: 100 m ohms max.

INSULATION RESISTANCE: 100 M ohms min.

DIELECTRIC STRENGTH: 250 V AC (50-60 Hz) between open terminals and between the frame and terminal.

OPERATING LIFE: 100,000 cycles with load

OPERATING FORCE: 80 ± 20 gf (0.784 ± 0.196N)

PRE-TRAVEL: 1.5 ± 0.3 mm

OVER-TRAVEL: 3.5 ± 0.3 mm

TOTAL TRAVEL: 5 ± 0.3 mm

OPERATING TEMPERATURE: -20˚C to 65˚C

### Materials

KNOB: POM (UL 94HB)

COVER: PA (UL 94V-0)

HOUSING: PA (UL 94V-0)

SPRING: SUS

TERMINAL: Silver plated

## PS-42C02-F NS 1P4T NON-SHORTING

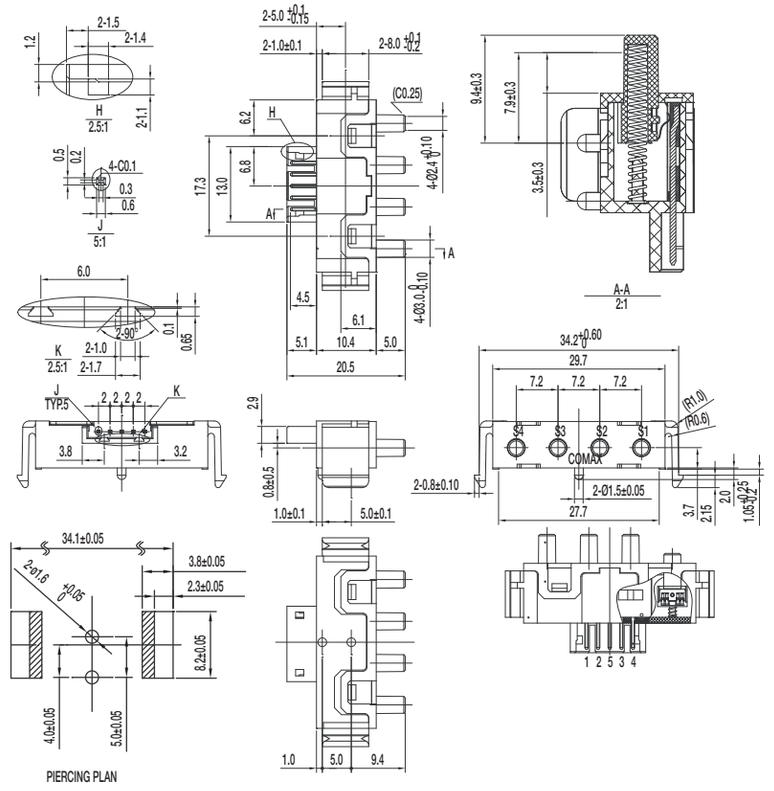


### Specifications

CONTACT RATING: 100 µ A @ 3 VDC min. / 10mA @ 5 VDC max

INITIAL CONTACT RESISTANCE: 100 m ohms max.

INSULATION RESISTANCE: 100 M ohms min.

DIELECTRIC STRENGTH: 250 V AC (50-60 Hz) between open terminals and between the frame and terminal.

OPERATING LIFE: 100,000 cycles with load

OPERATING FORCE: 80 ± 20 gf (0.784 ± 0.196N)

PRE-TRAVEL: 1.5 ± 0.3 mm

OVER-TRAVEL: 3.5 ± 0.3 mm

TOTAL TRAVEL: 5 ± 0.3 mm

OPERATING TEMPERATURE: -20˚C to 65˚C

### Materials

KNOB: POM (UL 94HB)

COVER: PA (UL 94V-0)

HOUSING: PA (UL 94V-0)

SPRING: SUS

TERMINAL: Silver plated

*Dimensions are shown: mm*
*Specifications and dimensions subject to change*

# PS Series
# Miniature Pushbutton Switches

## PS-22C08-G10 NS DPDT NON-SHORTING

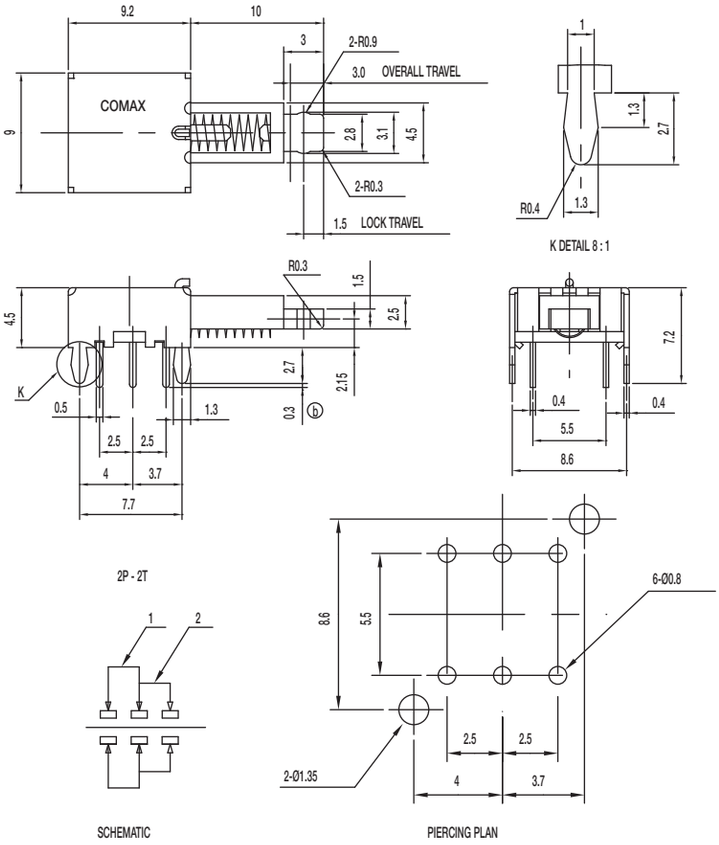


### Specifications

CONTACT RATING: 0.3A @ 30 VDC
INITIAL CONTACT RESISTANCE: 30 m ohms max.
INSULATION RESISTANCE: 100 M ohms min.
DIELECTRIC STRENGTH: 500 V AC (50-60 Hz) between open terminals and between the frame and terminal.
OPERATING LIFE: 10,000 cycles without load
OPERATING FORCE: 200 ± 100 gf (1.96 ± 0.98N)
LOCK TRAVEL: 1.5 ± 0.3 mm
OVER-TRAVEL: 3 ± 0.3 mm
OPERATING TEMPERATURE: -20˚C to 70˚C

### Materials

FRAME: SPCC
KNOB: POM (UL 94HB)
CONTACT: Silver plated
SPRING: SUS
TERMINAL: Silver plated

## PS-22E08-G10 NS DPDT NON-SHORTING

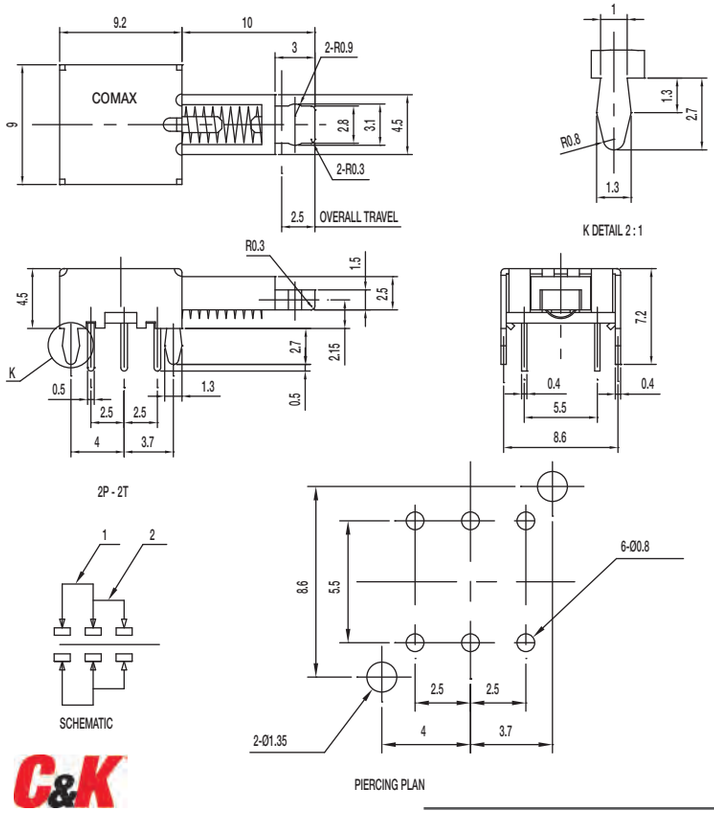


### Specifications

CONTACT RATING: 0.3A @ 30 VDC
INITIAL CONTACT RESISTANCE: 30 m ohms max.
INSULATION RESISTANCE: 100 M ohms min.
DIELECTRIC STRENGTH: 500 V AC (50-60 Hz) between open terminals and between the frame and terminal.
OPERATING LIFE: 10,000 cycles without load
OPERATING FORCE: 200 ± 100 gf (1.96 ± 0.98N)
TOTAL TRAVEL: 2.5 ± 0.3 mm
OPERATING TEMPERATURE: -20˚C to 70˚C

### Materials

FRAME: SPCC
KNOB: POM (UL 94HB)
CONTACT: Silver plated
SPRING: SUS
TERMINAL: Silver plated

*Dimensions are shown: mm*
*Specifications and dimensions subject to change*

## PS-22E09-G 4.5 NS DPDT NON-SHORTING

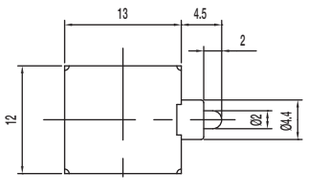


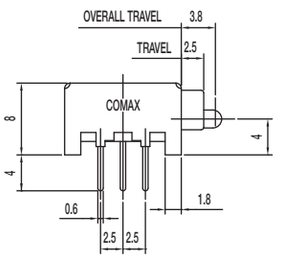


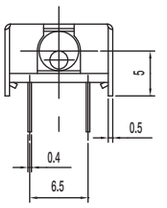


2P - 2T

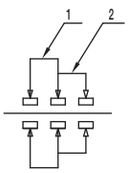


SCHEMATIC

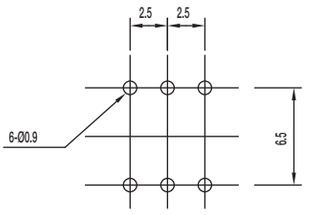


PIERCING PLAN

### Specifications

CONTACT RATING: 0.3A @ 30 VDC
INITIAL CONTACT RESISTANCE: 30 m ohms max.
INSULATION RESISTANCE: 100 M ohms min.
DIELECTRIC STRENGTH: 500 V AC (50-60 Hz) between open terminals and between the frame and terminal.
OPERATING LIFE: 10,000 cycles with load
OPERATING FORCE: 70 ± 20 gf (0.686 ± 0.196N)
TRAVEL: 2.5 ± 0.3 mm
TOTAL TRAVEL: 3.8 ± 0.3 mm
OPERATING TEMPERATURE: -20˚C to 70˚C

### Materials

FRAME: SPCC
KNOB: POM (UL 94HB)
CONTACT: Silver plated
SPRING: SUS
TERMINAL: Silver plated

## PS-42D09-NS 4P2T NON-SHORTING

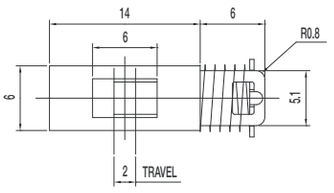


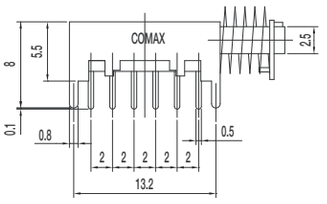


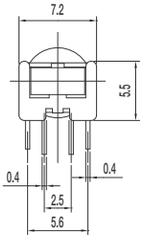


4P - 2T

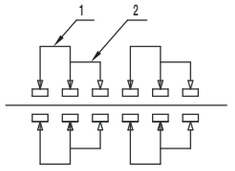


SCHEMATIC

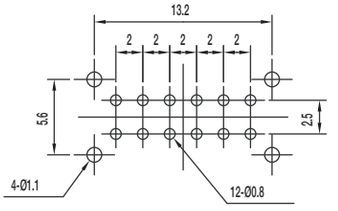


PIERCING PLAN

### Specifications

CONTACT RATING: 0.3A @ 30 VDC
INITIAL CONTACT RESISTANCE: 30 m ohms max.
INSULATION RESISTANCE: 100 M ohms min.
DIELECTRIC STRENGTH: 500 V AC (50-60 Hz) between open terminals and between the frame and terminal.
OPERATING LIFE: 10,000 cycles with load
OPERATING FORCE: 250 ± 100 gf (2.45 ± 0.98N)
TRAVEL: 2 ± 0.3 mm
OPERATING TEMPERATURE: -20˚C to 70˚C

### Materials

FRAME: SPCC
KNOB: POM (UL 94HB)
CONTACT PLATE: Silver plated
SPRING: Steel
TERMINAL: Silver plated

# PS Series
# Miniature Pushbutton Switches

## PS-42D13-NS 4P2T NON-SHORTING

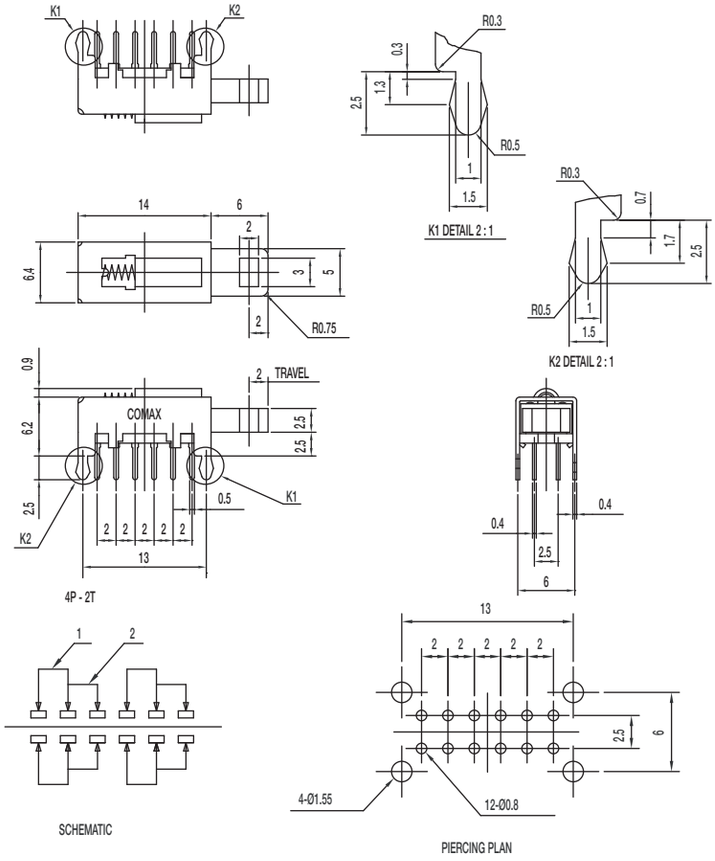


### Specifications

CONTACT RATING: 0.3A @ 30 VDC

INITIAL CONTACT RESISTANCE: 30 m ohms max.

INSULATION RESISTANCE: 100 M ohms min.

DIELECTRIC STRENGTH: 500 V AC (50-60 Hz) between open terminals and between the frame and terminal.

OPERATING LIFE: 10,000 cycles with load

OPERATING FORCE: 250 ± 100 gf (2.45 ± 0.98N)

TRAVEL: 2 ± 0.3 mm

OPERATING TEMPERATURE: -20˚C to 70˚C

### Materials

FRAME: SPCC

KNOB: POM (UL 94HB)

CONTACT: Silver plated

SPRING: Steel

TERMINAL: Silver plated

## PS-42D16-S 4P2T SHORTING

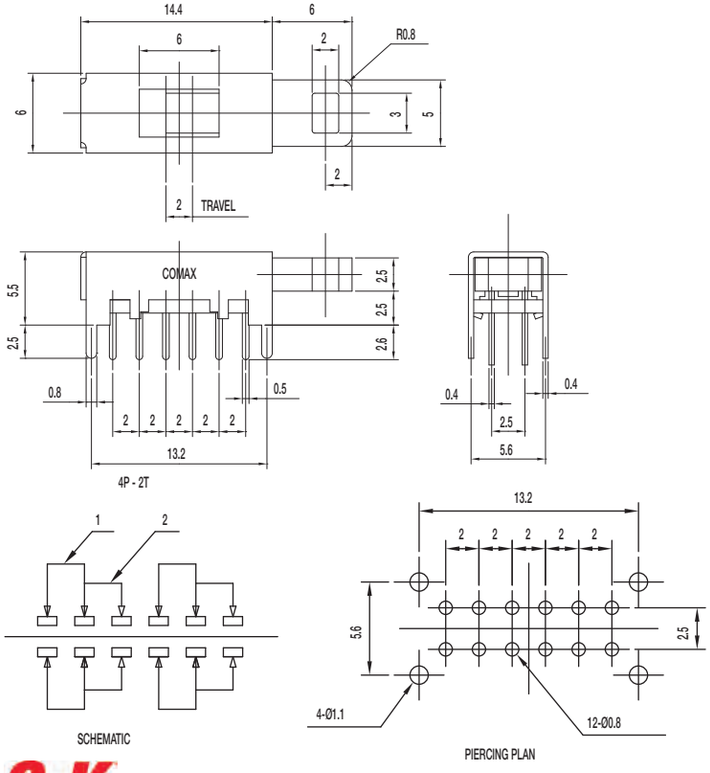


### Specifications

CONTACT RATING: 0.3A @ 30 VDC

INITIAL CONTACT RESISTANCE: 30 m ohms max.

INSULATION RESISTANCE: 100 M ohms min.

DIELECTRIC STRENGTH: 500 V AC (50-60 Hz) between open terminals and between the frame and terminal.

OPERATING LIFE: 10,000 cycles with load

OPERATING FORCE: 60 ± 30 gf (0.59 ± 0.29N)

TRAVEL: 2 ± 0.3 mm

OPERATING TEMPERATURE: -20˚C to 70˚C

### Materials

FRAME: SPCC

KNOB: POM (UL 94HB)

CONTACT: Silver plated

TERMINAL: Silver plated

*Dimensions are shown: mm*
*Specifications and dimensions subject to change*

## PS-62D10-S 6P2T SHORTING

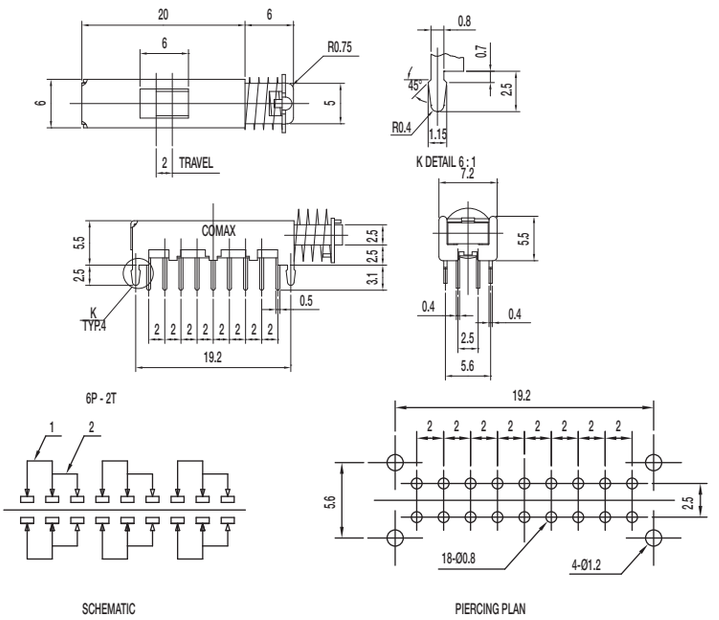


### Specifications

CONTACT RATING: 0.3A @ 30 VDC

INITIAL CONTACT RESISTANCE: 30 m ohms max.

INSULATION RESISTANCE: 100 M ohms min.

DIELECTRIC STRENGTH: 500 V AC (50-60 Hz) between open terminals and between the frame and terminal.

OPERATING LIFE: 10,000 cycles with load

OPERATING FORCE: 250 ± 100 gf (2.45 ± 0.98N)

TRAVEL: 2 ± 0.3 mm

OPERATING TEMPERATURE: -20˚C to 70˚C

### Materials

FRAME: SPCC

KNOB: POM (UL 94HB)

CONTACT: Silver plated

SPRING: Steel

TERMINAL: Silver plated

## PS-62D13-S 6P2T SHORTING

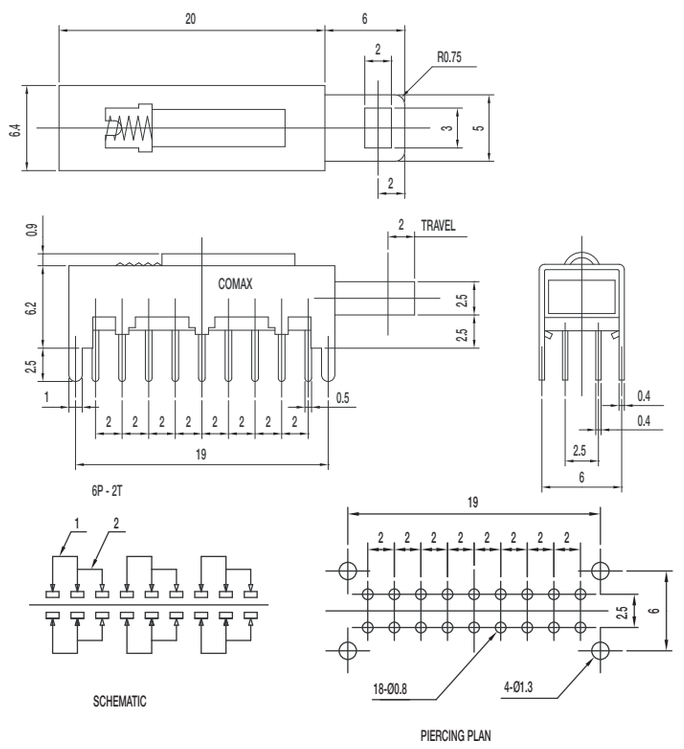


### Specifications

CONTACT RATING: 0.3A @ 30 VDC

INITIAL CONTACT RESISTANCE: 30 m ohms max.

INSULATION RESISTANCE: 100 M ohms min.

DIELECTRIC STRENGTH: 500 V AC (50-60 Hz) between open terminals and between the frame and terminal.

OPERATING LIFE: 10,000 cycles with load

OPERATING FORCE: 300 ± 100 gf (2.94 ± 0.98N)

TRAVEL: 2 ± 0.3 mm

OPERATING TEMPERATURE: -20˚C to 70˚C

### Materials

FRAME: SPCC

KNOB: POM (UL 94HB)

CONTACT PLATE: Silver plated

SPRING: Steel

TERMINAL: SUS

# PS Series
# Miniature Pushbutton Switches

## PS-62D15-S 6P2T SHORTING

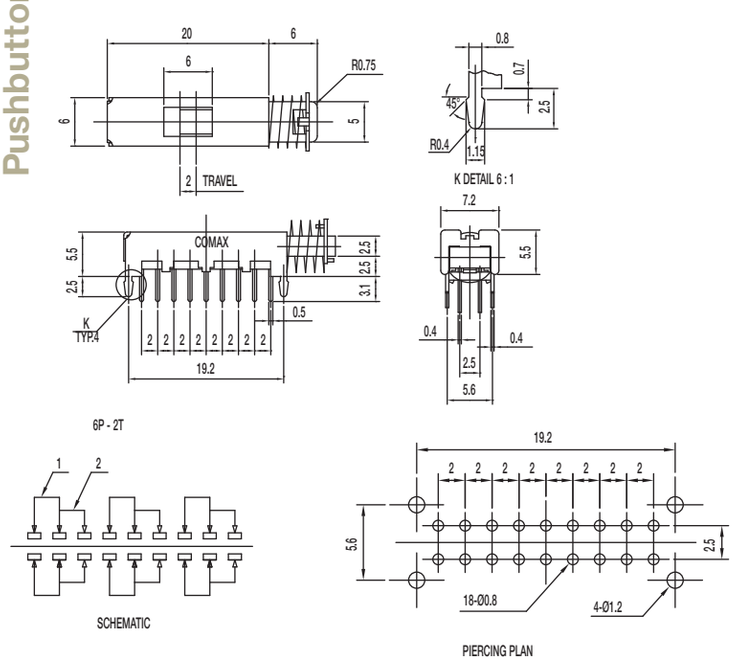


### Specifications

CONTACT RATING: 0.3A @ 30 VDC

INITIAL CONTACT RESISTANCE: 30 m ohms max.

INSULATION RESISTANCE: 100 M ohms min.

DIELECTRIC STRENGTH: 500 V AC (50-60 Hz) between open terminals and between the frame and terminal.

OPERATING LIFE: 10,000 cycles with load

OPERATING FORCE: 250 ± 100 gf (2.45 ± 0.98N)

TRAVEL: 2 ± 0.3 mm

OPERATING TEMPERATURE: -20˚C to 70˚C

### Materials

FRAME: SPCC

KNOB: POM (UL 94HB)

CONTACT: Silver plated

SPRING: Steel

TERMINAL: Silver plated

## PS-22E02-G13 S DPDT SHORTING WITH LOCK

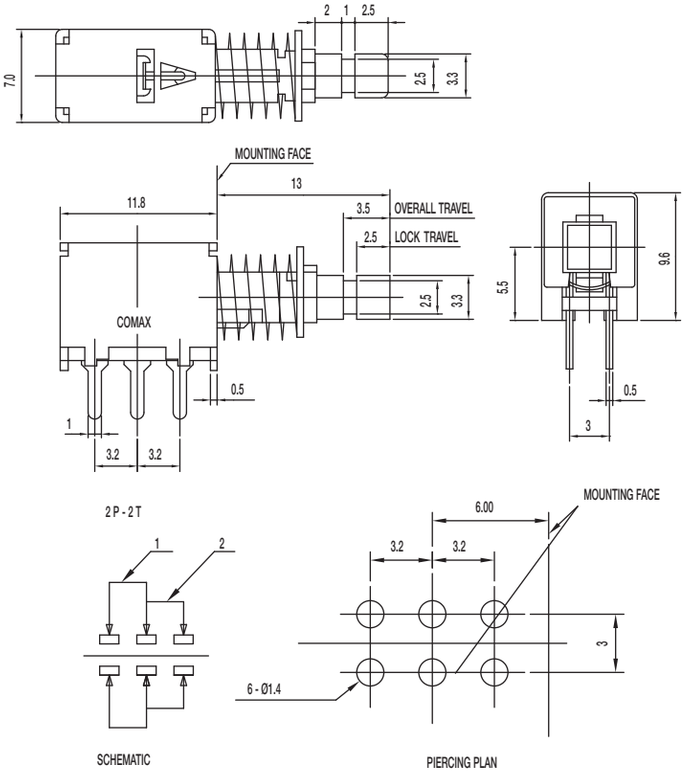


### Specifications

CONTACT RATING: 0.3A @ 30 VDC

INITIAL CONTACT RESISTANCE: 30 m ohms max.

INSULATION RESISTANCE: 100 M ohms min.

DIELECTRIC STRENGTH: 500 V AC (50-60 Hz) between open terminals and between the frame and terminal.

OPERATING LIFE: 10,000 cycles with load

OPERATING FORCE: 300 ± 100 gf (2.94 ± 0.98N)

LOCK TRAVEL: 2.5 ± 0.3 mm

TOTAL TRAVEL: 3.5 ± 0.3 mm

OPERATING TEMPERATURE: -20˚C to 70˚C

### Materials

FRAME: SPCC

KNOB: POM (UL 94HB)

CONTACT: Silver plated

SPRING: Steel

TERMINAL: Silver plated

## PS-22E04-G13 NS DPDT NON-SHORTING WITH LOCK

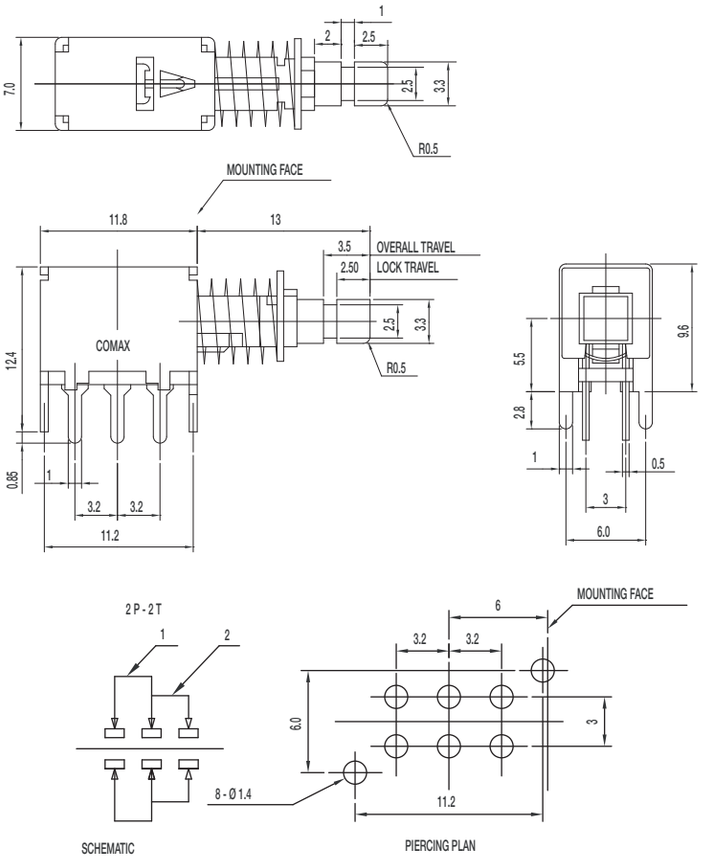


### Specifications

CONTACT RATING: 0.3A @ 30 VDC
INITIAL CONTACT RESISTANCE: 30 m ohms max.
INSULATION RESISTANCE: 100 M ohms min.
DIELECTRIC STRENGTH: 500 V AC (50-60 Hz) between open terminals and between the frame and terminal.
OPERATING LIFE: 10,000 cycles with load
OPERATING FORCE: 300 ± 100 gf (2.94 ± 0.98N)
LOCK TRAVEL: 2.5 ± 0.3 mm
TOTAL TRAVEL: 3.5 ± 0.3 mm
OPERATING TEMPERATURE: -20˚C to 70˚C

### Materials

FRAME: SPCC
KNOB: POM (UL 94HB)
CONTACT: Silver plated
SPRING: Steel
TERMINAL: Silver plated

## PS-22E44-G13 NS DPDT NON-SHORTING WITH LOCK

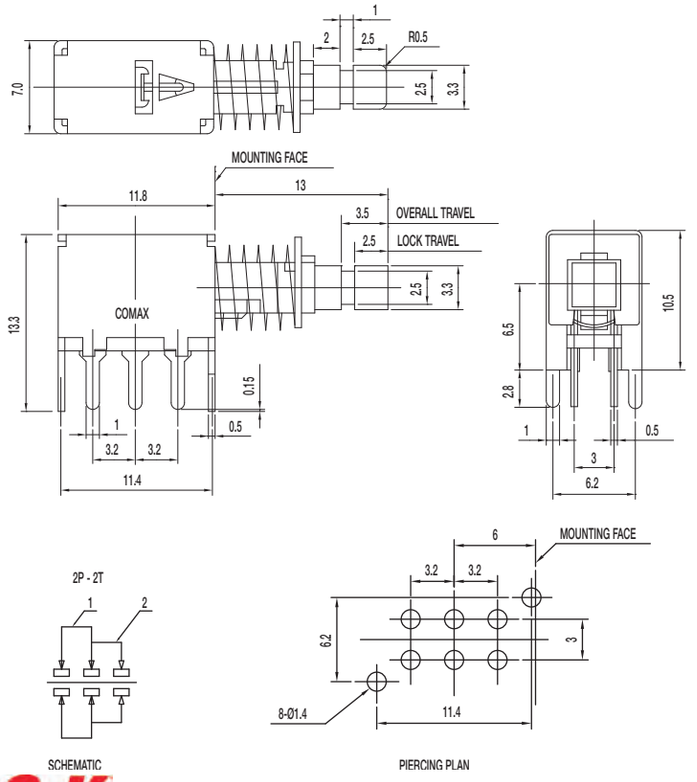


### Specifications

CONTACT RATING: 0.3A @ 30 VDC
INITIAL CONTACT RESISTANCE: 30 m ohms max.
INSULATION RESISTANCE: 100 M ohms min.
DIELECTRIC STRENGTH: 500 V AC (50-60 Hz) between open terminals and between the frame and terminal.
OPERATING LIFE: 10,000 cycles with load
OPERATING FORCE: 300 ± 100 gf (2.94 ± 0.98N)
LOCK TRAVEL: 2.5 ± 0.3 mm
TOTAL TRAVEL: 3.5 ± 0.3 mm
OPERATING TEMPERATURE: -20˚C to 70˚C

### Materials

FRAME: SPCC
KNOB: POM (UL 94HB)
CONTACT: Silver plated
SPRING: Steel
TERMINAL: Silver plated

*Dimensions are shown: mm*
*Specifications and dimensions subject to change*

# PS Series
# Miniature Pushbutton Switches

## PS-22E75-G13 NS DPDT NON-SHORTING WITH LOCK

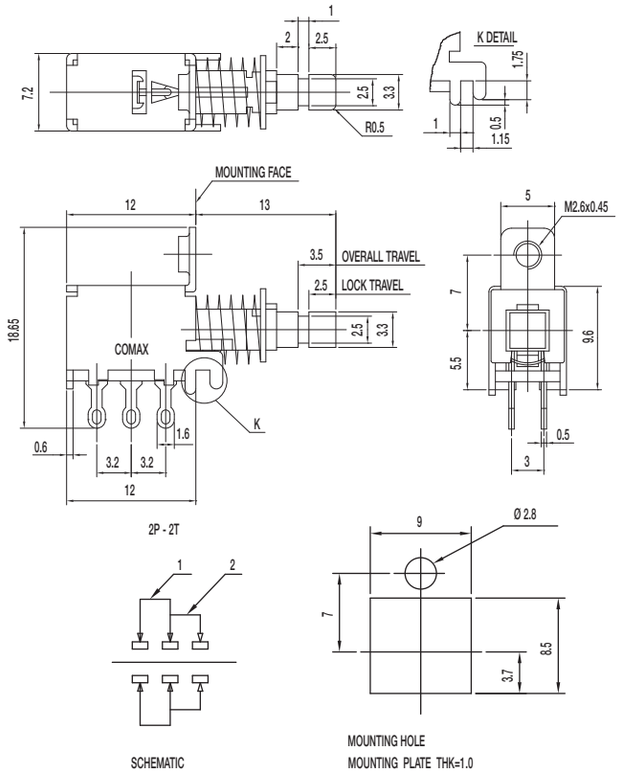


### Specifications

CONTACT RATING: 0.3A @ 30 VDC

INITIAL CONTACT RESISTANCE: 30 m ohms max.

INSULATION RESISTANCE: 100 M ohms min.

DIELECTRIC STRENGTH: 500 V AC (50-60 Hz) between open terminals and between the frame and terminal.

OPERATING LIFE: 10,000 cycles with load

OPERATING FORCE: 300 ± 100 gf (2.94 ± 0.98N)

LOCK TRAVEL: 2.5 ± 0.3 mm

TOTAL TRAVEL: 3.5 ± 0.3 mm

OPERATING TEMPERATURE: -20˚C to 70˚C

### Materials

FRAME: SPCC

KNOB: POM (UL 94HB)

CONTACT: Silver plated

SPRING: Steel

TERMINAL: Silver plated

## PS-22E95-G13 NS DPDT NON-SHORTING WITH LOCK

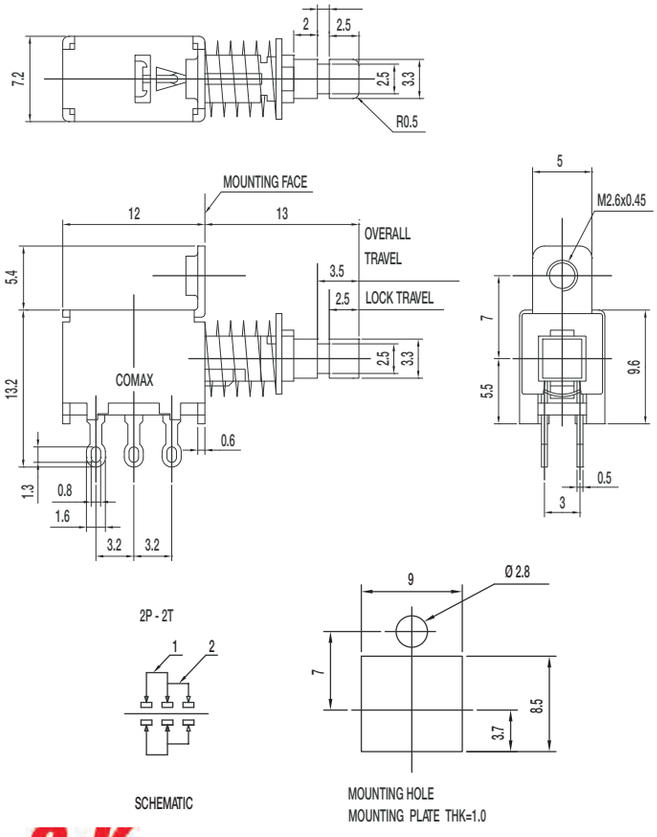


### Specifications

CONTACT RATING: 0.3A @ 30 VDC

INITIAL CONTACT RESISTANCE: 30 m ohms max.

INSULATION RESISTANCE: 100 M ohms min.

DIELECTRIC STRENGTH: 500 V AC (50-60 Hz) between open terminals and between the frame and terminal.

OPERATING LIFE: 10,000 cycles with load

OPERATING FORCE: 300 ± 100 gf (2.94 ± 0.98N)

LOCK TRAVEL: 2.5 ± 0.3 mm

TOTAL TRAVEL: 3.5 ± 0.3 mm

OPERATING TEMPERATURE: -20˚C to 70˚C

### Materials

FRAME: SPCC

KNOB: POM (UL 94HB)

CONTACT: Silver plated

SPRING: Steel

TERMINAL: Silver plated

*Dimensions are shown: mm*
*Specifications and dimensions subject to change*

## PS-22F02-G13 S DPDT SHORTING

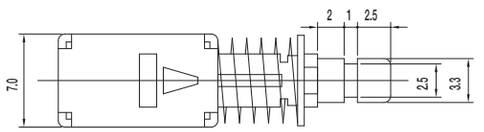


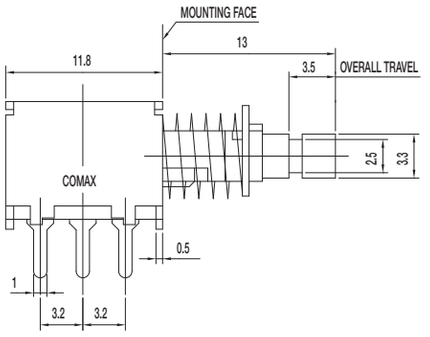


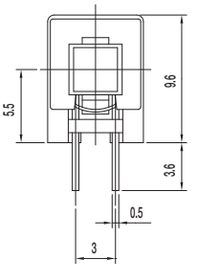


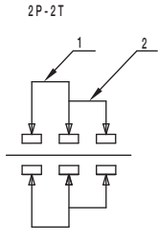


SCHEMATIC

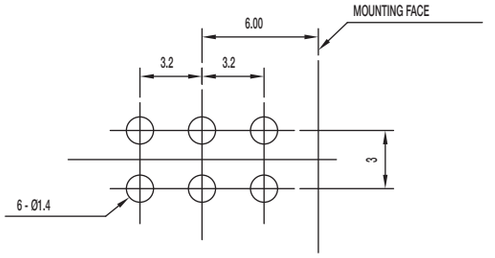


PIERCING PLAN

### Specifications

CONTACT RATING: 0.3A @ 30 VDC
INITIAL CONTACT RESISTANCE: 30 m ohms max.
INSULATION RESISTANCE: 100 M ohms min.
DIELECTRIC STRENGTH: 500 V AC (50-60 Hz) between openterminals and between the frame and terminal.
OPERATING LIFE: 10,000 cycles with load
OPERATING FORCE: 300 ± 100 gf (2.94 ± 0.98N)
TOTAL TRAVEL: 3.5 ± 0.3 mm
OPERATING TEMPERATURE: -20˚C to 70˚C

### Materials

FRAME: SPCC
KNOB: POM (UL 94HB)
CONTACT: Silver plated
SPRING: Steel
TERMINAL: Silver plated

## PS-22F04-G13 NS DPDT NON_SHORTING

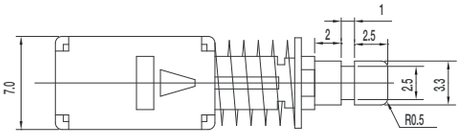


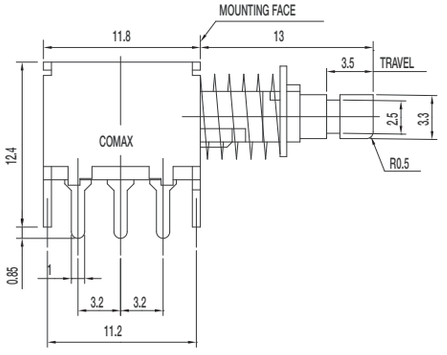


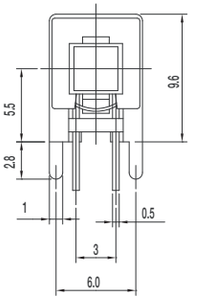


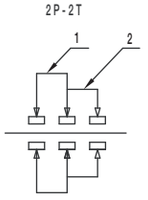


SCHEMATIC

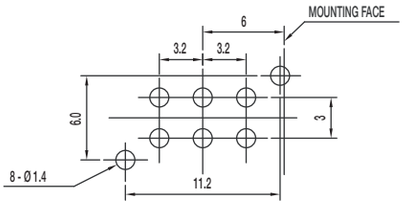


PIERCING PLAN

### Specifications

CONTACT RATING: 0.3A @ 30 VDC
INITIAL CONTACT RESISTANCE: 30 m ohms max.
INSULATION RESISTANCE: 100 M ohms min.
DIELECTRIC STRENGTH: 500 V AC (50-60 Hz) between open terminals and between the frame and terminal.
OPERATING LIFE: 10,000 cycles with load
OPERATING FORCE: 300 ± 100 gf (2.94 ± 0.98N)
TOTAL TRAVEL: 3.5 ± 0.3 mm
OPERATING TEMPERATURE: -20˚C to 70˚C

### Materials

FRAME: SPCC
KNOB: POM (UL 94HB)
CONTACT: Silver plated
SPRING: Steel
TERMINAL: Silver plated

# PS Series
# Miniature Pushbutton Switches

## PS-22F24-G13 NS DPDT NON_SHORTING

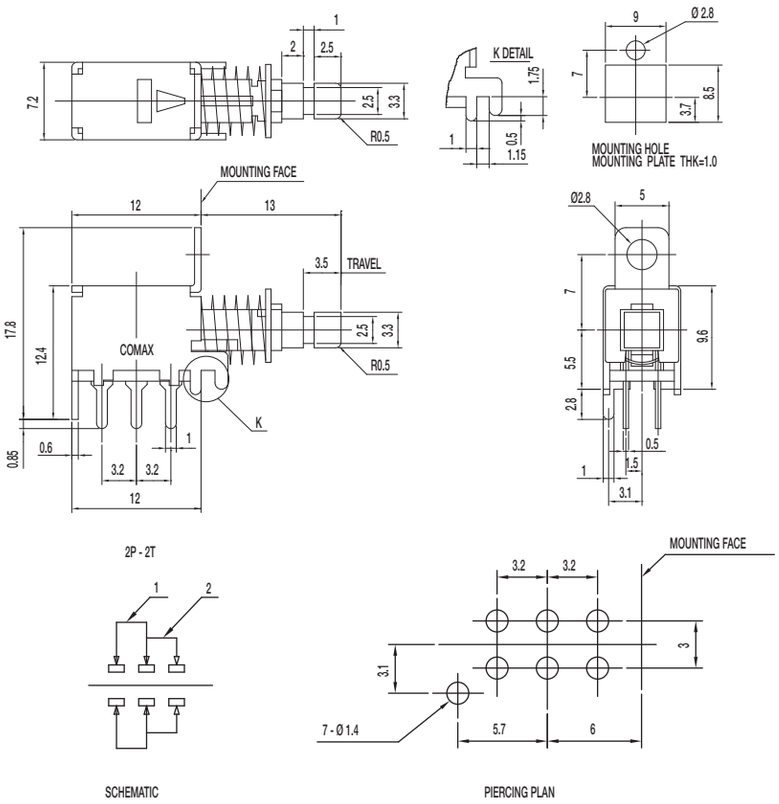


### Specifications

CONTACT RATING: 0.3A @ 30 VDC
INITIAL CONTACT RESISTANCE: 30 m ohms max.
INSULATION RESISTANCE: 100 M ohms min.
DIELECTRIC STRENGTH: 500 V AC (50-60 Hz) between open terminals and between the frame and terminal.
OPERATING LIFE: 10,000 cycles with load
OPERATING FORCE: 300 ± 100 gf (2.94 ± 0.98N)
TOTAL TRAVEL: 3.5 ± 0.3 mm
OPERATING TEMPERATURE: -20˚C to 70˚C

### Materials

FRAME: SPCC
KNOB: POM (UL 94HB)
CONTACT: Silver plated
SPRING: Steel
TERMINAL: Silver plated

## PS-22F44-G13 NS DPDT NON_SHORTING

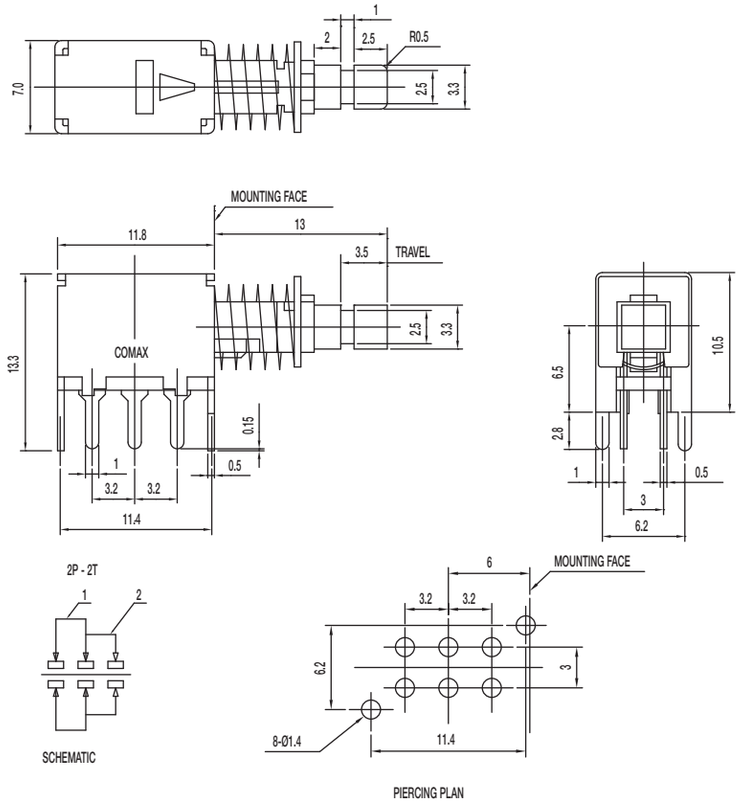


### Specifications

CONTACT RATING: 0.3A @ 30 VDC
INITIAL CONTACT RESISTANCE: 30 m ohms max.
INSULATION RESISTANCE: 100 M ohms min.
DIELECTRIC STRENGTH: 500 V AC (50-60 Hz) between open terminals and between the frame and terminal.
OPERATING LIFE: 10,000 cycles with load
OPERATING FORCE: 300 ± 100 gf (2.94 ± 0.98N)
TOTAL TRAVEL: 3.5 ± 0.3 mm
OPERATING TEMPERATURE: -20˚C to 70˚C

### Materials

FRAME: SPCC
KNOB: POM (UL 94HB)
CONTACT: Silver plated
SPRING: Steel
TERMINAL: Silver plated

*Dimensions are shown: mm*
*Specifications and dimensions subject to change*

# Tactile Switches
# Product Selection Guide



| Surface Mount | | | | | | | |
|---|---|---|---|---|---|---|---|
| **Series** | **KXT2** | **KXT3** | **KMT2** | **KMT0** | **KMR 2-8** | **KMS** | **PTS525** |
| **Size on PCB L x W (mm)** | 3,9 x 3 | 3 x 2 | 3 x 2,6 | 3 x 2,6 | 4,2 x 2,8 | 4,2 x 3,55 | 5,2 x 5,2 |
| **Total Height (mm)** | 1,05 | 0,6 | 0,65 | 0,65 | 1,9<br>2,5 | 1,42 | 0,8 and 1,5 |
| **Travel (mm)** | 0,1 | 0,13 | 0,15 | 0,15 | 0,2 to 0,35 | 0,25 to 0,3 | 0,3 |
| **Actuation Force (N)** | 100 gf<br>200 gf | 100 gf<br>160gf<br>240 gf<br>330 gf | 1,0<br>1,6 | 1,0; 1,6<br>2,3; 3,4 | 1,2; 2,0<br>3,0; 4,0 | 2,0<br>3,0 | 1,6<br>2,6 |
| **Contact Type** | Silver | Silver | Silver | Silver | Silver / Gold | Silver / Gold | Silver |
| **Max. Voltage (V)** | 12 | 15 | 32 | 32 | 32 | 32 | 32 |
| **Max. Switching Power (VA)** | 0,5 | 0,5 | 0,5 | 0,5 | 1 / 0,2 | 1 / 0,2 | 1 |
| **Life Cycles** | 100,000 | 300,000<br>500,000 | 150,000 | 300,000/600,000<br>1,000,000 | 100,000<br>300,000 | 100,000 | 100,000 |
| **IP Rating** | IP64 | IP64 | IP54 | IP68 | IP40 | IP40 | IP40 |
| **Page Number** | B-5 | B-7 | B-9 | B-11 | B-13 | B-23 | B-25 |

| Surface Mount | 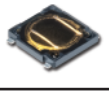 | | | | | | |
|---|---|---|---|---|---|---|---|
| **Series** | **PTS530** | **PTS540** | **PTS810** | **PTS820** | **PTS830** | **PTS840** | **KSR** |
| **Size on PCB L x W (mm)** | 4,5 x 4,5 | 3,7 x 3,7 | 4,2 x 3,2 | 3,9 x 2,9 | 3,5 x 2,6 | 3,5 x 3,55 | 7,15 x 3,8<br>7,3 x 3,8 |
| **Total Height (mm)** | 0,55 and 0,65 | 0,55 / 0,65 | 2,5 | 1,5/2,0/2,5 | 1,4 | 1,35 | 2,5 |
| **Travel (mm)** | 0,2 | 0,15 | 0,15/0,2 | 0,2 | 0,15 | 0,2 | 0,3 to 0,5 |
| **Actuation Force (N)** | 1,0; 1,6;<br>2,0; 2,6;<br>4,0; 6,0 | 160 gf<br>230 gf | 1,6; 2,6;<br>4,0; 6,0 | 1,6<br>2,5 | 160 gf<br>450 gf | 1,6<br>2,2 | 1,2; 2,0;<br>3,0; 4,5 |
| **Contact Type** | Silver | Silver | Silver | Silver | Silver | Silver | Silver / Gold |
| **Max. Voltage (V)** | 12 | 12 | 16 | 12 | 12 | 12 | 32 |
| **Max. Switching Power (VA)** | – | – | – | - | - | - | 1 / 0,2 |
| **Life Cycles** | 150,000 to<br>1,000,000 | 300,000<br>500,000 | 50,000 to<br>150,000 | 100,000<br>200,000 | 200,000<br>500,000 | 100,000 | 100,000<br>200,000 |
| **IP Rating** | - | IP40 | IP40 | IP40 | IP40 | IP40 | IP50 |
| **Page Number** | B-29 | B-31 | B-33 | B-35 | B-38 | B-42 | B-45 |

* Other options available by request

*Dimensions are shown: mm*
*Specifications and dimensions subject to change*

| Surface Mount Thru-Hole Options | | | | 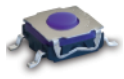 | |
|---|---|---|---|---|---|
| **Series** | **KSS** | **KSC4V2** | **KSC 1 - 10** | **KSE** | **KT** |
| **Footprint** | 5,5 x 4,4 | 2 holes ø 1,1<br>2 pads 1,5 x 0,8 | J<br>6,8 x 6,2<br>G<br>10 x 6,2 | 6,8 x 6,2 | SA<br>7,5x5<br>SA2<br>7,5x7 |
| **Total Height (mm)** | 1,7 | 5,0* | | 3,1 / 4,3 | 6,6<br>7,11 with tab |
| **Travel (mm)** | 0,3 | 0,7* | 0,20 to 0,75 * | 0,3 | 0,3 to 0,5 |
| **Actuation Force (N)** | 2<br>2,5<br>4 | 3.5* | 1,1 to 5,5 * | 1.5<br>2.25 | 3 |
| **Contact Type** | Silver / Gold | Silver / Gold | Silver / Gold | Silver | Silver / Gold |
| **Max. Voltage (V)** | 32 | 32 | 32 | 32 | 50 |
| **Max. Switching Power (VA)** | 1 / 0,2 | 1 / 0,2 | 1 / 0.2 | 1 | 1 / 0.2 |
| **Life Cycles** | 100,000 | 300,000 | 100,000 to 1,000,000 | 300,000 | 100,000 |
| **IP Rating** | IP40 | IP67 | IP67 | IP67 | |
| **Page Number** | B-49 | B-63 | B-51 | B-65 | B-68 |

| Surface Mount Thru-Hole Options | | | | | | | |
|---|---|---|---|---|---|---|---|
| **Series** | **K5AT** | **K8** | **K5V** | **KSF/KSI** | **KSA** | **KSA-V** | **KSA MKII** |
| **Footprint** | G<br>8,4 x 10,8 | G<br>8,4 x 10,8 | 8 x 9 x 17 /<br>9 x 13 | 7,62 x 5,08 | 7,62 x 5,08 | 7,62 x 2,54 | 7,62 x 5,08 |
| **Total Height (mm)** | 6,1 | 6 | 9 / 13 | 2,6 | 4,7<br>button option | 8 | 4,7 |
| **Travel (mm)** | 0,5 | 0,45 | 1,2 | 0,3 to 0,5 | 0,3 to 0,5 | 0,3 to 0,5 | 0,3 to 0,5 |
| **Actuation Force (N)** | 4.0 | 4.0 | 4.0 | 1.3<br>3.0<br>1.6<br>5.0 | 1.3<br>3.0<br>5.0 | 1.3<br>3.0<br>5.0 | 1.3<br>3.0<br>5.0 |
| **Contact Type** | Gold | Silver | Gold | Silver / Gold | Silver / Gold | Silver / Gold | Silver / Gold |
| **Max. Voltage (V)** | 32 | 32 | 32 | 32 | 32 | 32 | 32 |
| **Max. Switching Power (VA)** | 1 | 1 | 1 | 1 / 0.2 | 1 / 0.2 | 1 / 0.2 | 1 / 0.2 |
| **Life Cycles** | 100,000 | 300,000 | 25,000 | 100,000 | 100,000 | 100,000 | 100,000<br>1,000,000 |
| **IP Rating** | IP40 | IP40 | IP40 | IP60 | IP60 | IP60 | IP67 |
| **Page Number** | B-73 | B-75 | B-78 | B-82 | B-84 | B-84 | B-89 |

* Other options available by request

# Tactile Switches
# Product Selection Guide

| Surface Mount Thru-Hole Options | | | | | |
|---|---|---|---|---|---|
| **Series** | **KSJ** | **KSJ-V** | **KSJ** | **KSJ-V** | **PTS635** |
| **Footprint** | 7,62 x 5,08 | 7,62 x 2,54 | 7,62 x 5,08 | 7,62 x 2,54 | 6 x 3,5 |
| **Total Height (mm)** | 9,9 | 8 | 6,65 | 8 | 2,5<br>4,3<br>5,0 |
| **Travel (mm)** | 0,3 to 0,5 | 0,3 to 0,5 | 0,55 to 0,7 | 0,55 to 0,7 | 0,25 |
| **Actuation Force (N)** | 1,3<br>3,0 | 1,3<br>3,0 | 2,0<br>3,0 | 2,0<br>3,0 | 1,3<br>2,0<br>2,6 |
| **Contact Type** | Silver / Gold | Silver / Gold | Silver / Gold | Silver / Gold | Silver |
| **Max. Voltage (V)** | 32 | 32 | 32 | 32 | 12 |
| **Life Cycles** | 100,000 | 100,000 | 100,000<br>30,000 | 100,000<br>30,000 | 20,000 |
| **IP Rating** | IP60 | IP60 | IP60 | IP60 | IP40 |
| **Page Number** | B-84 | B-84 | B-91 | B-91 | B-93 |

| Surface Mount Thru-Hole Options | | | 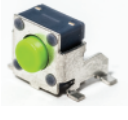 | | | |
|---|---|---|---|---|---|---|
| **Series** | **PTS641** | **PTS645** | **PTS645-V** | **PTS125** | **ITS** | |
| **Footprint** | 6,3 x 6,4 | 6 x 6 | 7,0 x 2,5 | 12 x 12 | variety of sizes available | |
| **Total Height (mm)** | 2,5<br>3,1<br>3,4 | 4,3; 5,0;<br>7,0; 9,5; | 7,1 | 4,3<br>7,3 Sq. 8,5<br>12,0 | | |
| **Travel (mm)** | 0,20 / 0,30 | 0,25 | 0,25 | 0,30 | 0,25 | |
| **Actuation Force (N)** | 160 gf<br>250 gf<br>320 gf | 1,3; 1,6<br>2,0; 2,6 | 1,3; 1,6<br>2,0; 2,6 | 1,6<br>2,6 | 160 gf | |
| **Contact Type** | Silver | Silver | Silver | Silver | Silver | |
| **Max. Voltage (V)** | 12 | 12 | 12 | 12 | 12 | |
| **Life Cycles** | 100,000 | 100,000 | 100,000 | 200,000 | 50,000 | |
| **IP Rating** | IP40 | IP40 | IP40 | IP40 | IP40 | |
| **Page Number** | B-96 | B-98 | B-103 | B-105 | B-109 | |

# KXT2 Series
# Double Action Ultra Low Profile Top Actuated

## *Features*

- ***3.9 x 3.0 mm footprint***
- ***1.05 mm thickness***
- ***Dual action***

## *Typical Applications*

- ***Wearable electronics***
- ***Mobile Phones***
- ***Portable Electronics***

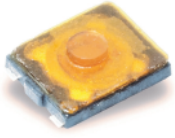

## Specification

FUNCTION: momentary action
CONTACT ARRANGEMENT: Dual action = SPDT, N.O.
TERMINALS: G type for SMT
TRAVEL: 0.1 mm ± 0.05 mm
TRAVEL: 0.2 mm + 0.1 / - 0.05 mm

## Mechanical

| | Operating force gf | | Operating Life |
|---|---|---|---|
| KXT 211 LHS | Push force 1<br>Push force 2 | 100 ± 40<br>200 ± 50 | 100,000 |

## Electrical

| | |
|---|---|
| MAXIMUM VOLTAGE: | 12 VDC |
| MAXIMUM CURRENT DC: | 50 mA |
| DIELECTRIC STRENGTH: | 250 V (50 Hz, 1 min.) |
| CONTACT RESISTANCE: | ≤ 500 mΩ |
| INSULATION RESISTANCE: | 100 MΩ |
| BOUNCE TIME: | ≤ 10 ms |

## Environmental

OPERATING TEMPERATURE: -40˚C to 85˚C
STORAGE TEMPERATURE: -40˚C to 85˚C

## Process

SOLDERING: This component is suited to the following methods:
Infrared Reflow Soldering in accordance with IEC61760-1

## Packaging

In reels of 6,000 pieces
Dimensions of reels according to EIA RS481 or IEC 2863
External diameter 178 mm ± 2mm

**NOTE**: Specifications listed above are for switches with standard options.
For information on specific and custom switches, consult Customer Service Center.

## Part Number Description

For any part number different from those listed above, please consult your local representative.

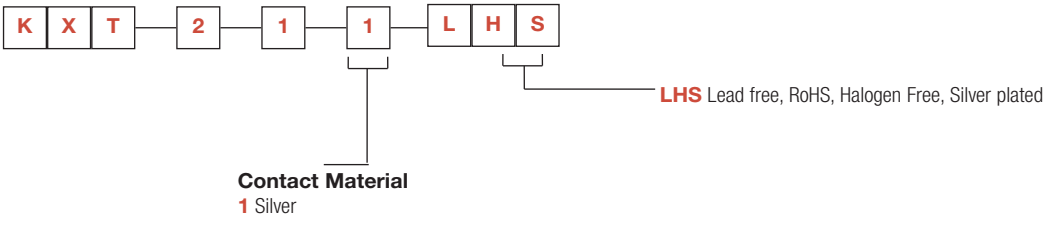

# KXT2 Series
# Double Action Ultra Low Profile Top Actuated

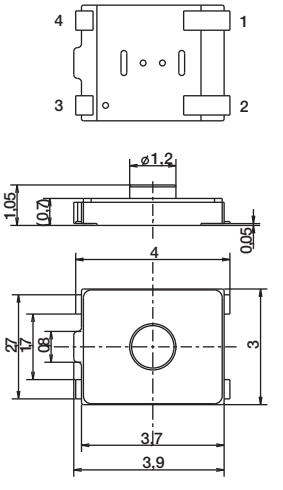

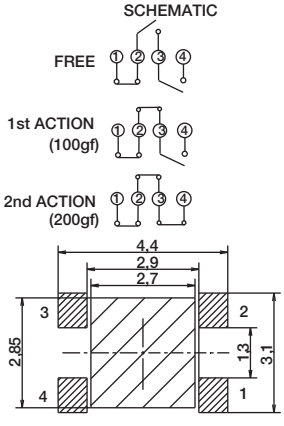


RECOMMENDED PCB LAYOUT

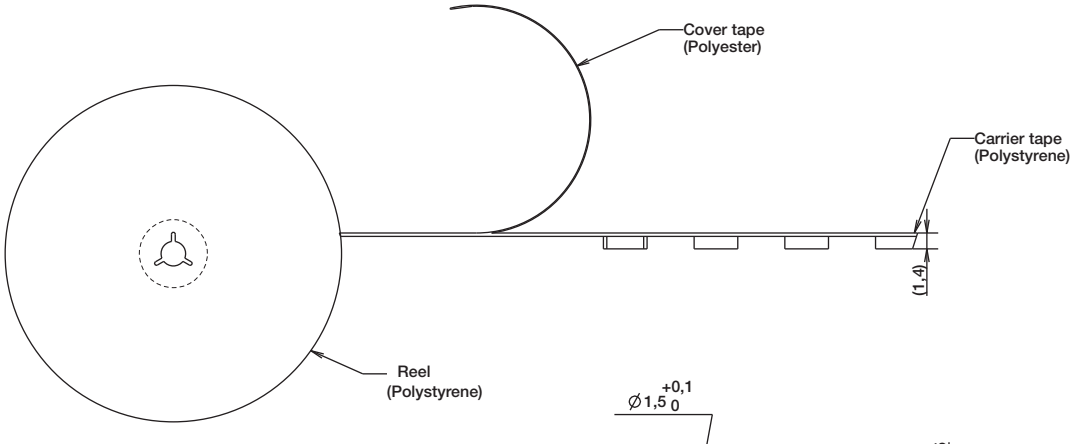


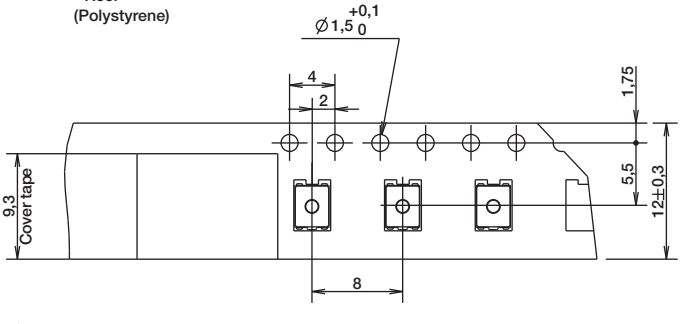


CARRIER TAPE

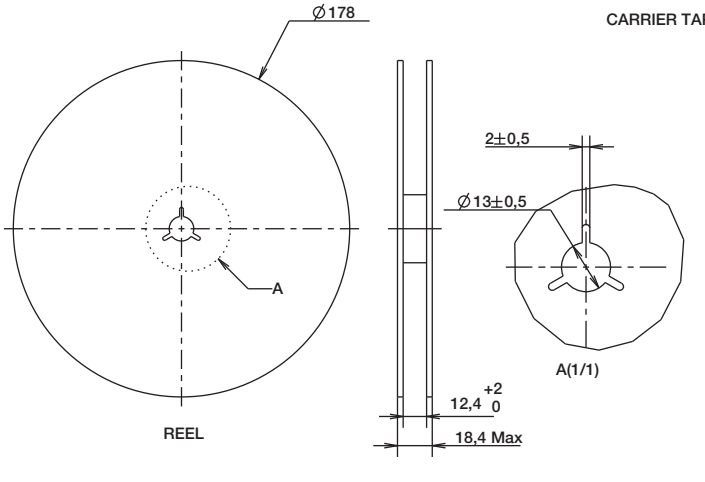


REEL

*Dimensions are shown: mm*
*Specifications and dimensions subject to change*

# KXT3 Series
# Ultra Low Profile Top Actuated

## Features

- *3.0 x 2.0 mm footprint*
- *0.6 mm thickness*
- *High number of cycle*

## Typical Applications

- *Wearable electronics*
- *In-Ear headphones, Earbuds*
- *Mobile Phones*
- *Portable Electronics*
- *Hearing Aids*

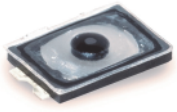

## Specification

FUNCTION: momentary action
CONTACT ARRANGEMENT: 1 make contact = SPST, N.O.
TERMINALS: G type for SMT
TRAVEL: 0.13 mm ± 0.05 mm

## Mechanical

| | Operating force gf | Operating Life | Casing Color |
|---|---|---|---|
| KXT 311 LHS | 100 ± 50 | 300,000 | Black |
| KXT 321 LHS | 160 ± 50 | 500,000 | Black |
| KXT 331 LHS | 240 ± 70 | 500,000 | Black |
| KXT 341 LHS | 330 ± 70 | 300,000 | Black |

## Electrical

MAXIMUM VOLTAGE: 15 VDC
MAXIMUM CURRENT DC: 20 mA
DIELECTRIC STRENGTH: (50/60 Hz, 1 min) 250 Vrms
CONTACT RESISTANCE: ≤ 500 mΩ
INSULATION RESISTANCE: ≥ 50 MΩ
BOUNCE TIME: ≤ 10 ms

## Environmental

OPERATING TEMPERATURE: -40˚C to 85˚C
STORAGE TEMPERATURE: -40˚C to 85˚C

## Process

SOLDERING: This component is suited to the following methods:
Infrared Reflow Soldering in accordance with IEC61760-1

## Packaging

In reels of 8,500 pieces
Dimensions of reels according to EIA 481B
External diameter 330 mm

**NOTE**: Specifications listed above are for switches with standard options.
For information on specific and custom switches, consult Customer Service Center.

## Part Number Description

For any part number different from those listed above, please consult your local representative.

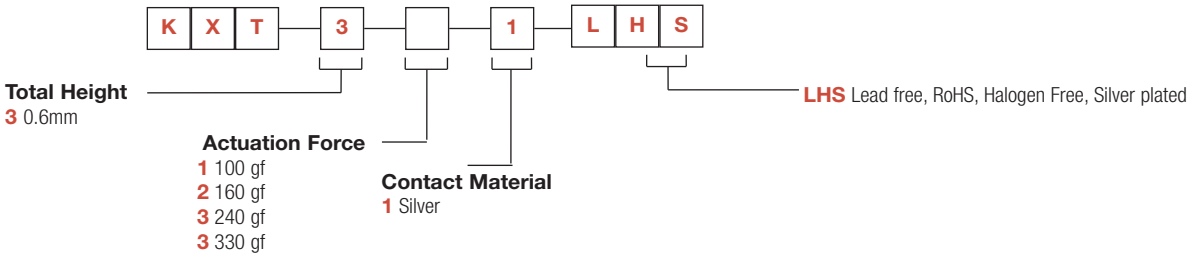

# KXT3 Series
# Ultra Low Profile Top Actuated

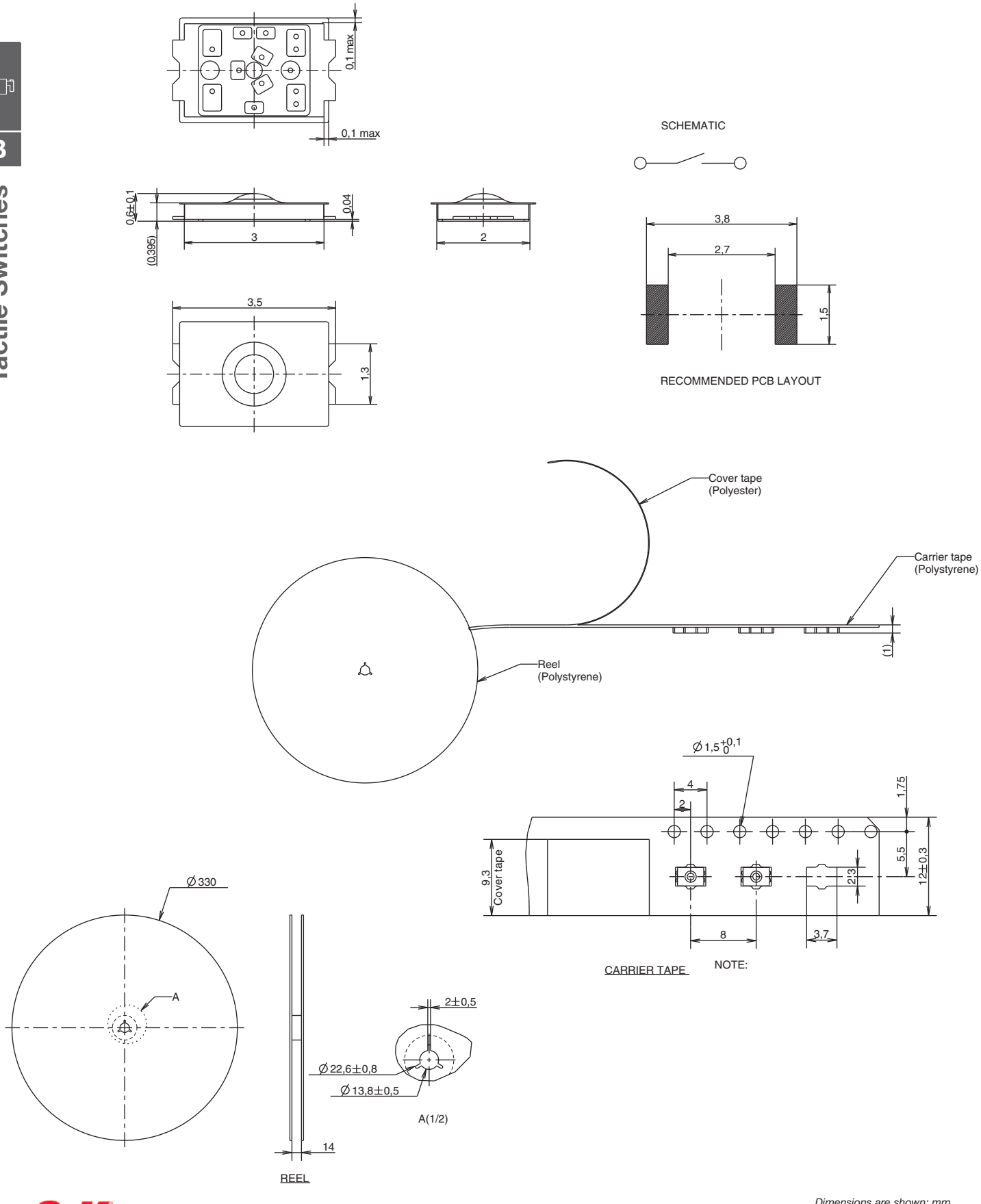

## Features

- *Smallest footprint*
- *High number of cycles within the smallest packaging*
- *Smallest thickness with integrated actuator*
- *Ground pin option*
- *Halogen free*

## Typical Applications

- *Mobile Phones*
- *Hearing Aids*
- *MP3 accessories*
- *Bluetooth Headset*

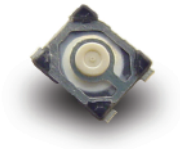



## Specification

FUNCTION: momentary action
CONTACT ARRANGEMENT: 1 make contact = SPST, N.O.
TERMINALS: Gullwing type for SMT

## Mechanical

| Type G and NG | Operating force Newtons (grams) | Operating Life | Tactile Feeling | Travel mm |
|---|---|---|---|---|
| KMT 211 HF LFS | 1.0 (100) ± 0.25 | 150,000 | ≥ 10% | 0.15 ± 0.1 |
| KMT 221 HF LFS | 1.6 (160) ± 0.40 | 150,000 | ≥ 30% | 0.15 ± 0.1 |

## Electrical

| | Silver |
|---|---|
| MAXIMUM POWER: | 0.5 VA |
| MAXIMUM VOLTAGE: | 32 VDC |
| MINIMUM VOLTAGE: | 20 mV |
| MAXIMUM CURRENT DC: | 50 mA |
| MINIMUM CURRENT DC: | 1 mA |
| DIELECTRIC STRENGTH: | ≥ 250 Vrms (1mn) |
| CONTACT RESISTANCE: | ≤ 150 mΩ |
| INSULATION RESISTANCE: | ≥ 50 MΩ |
| BOUNCE TIME: | ≤ 6 ms |

## Environmental

| | Silver |
|---|---|
| OPERATING TEMPERATURE: | -40˚C to 85˚C |
| STORAGE TEMPERATURE: | -55˚C (10 days)<br>+85˚C (4 days) |

## Process

SOLDERING: This component is suited to the following methods:
– Infrared Reflow Soldering in accordance with IEC61760-1

## Packaging

In reels of 4,000 pieces.
Dimensions of reels according to EIA 481B
External diameter 180 mm

**NOTE**: Specifications listed above are for switches with standard options.
For information on specific and custom switches, consult Customer Service Center.

## Part Number Description

For any part number different from those listed above, please consult your local representative.

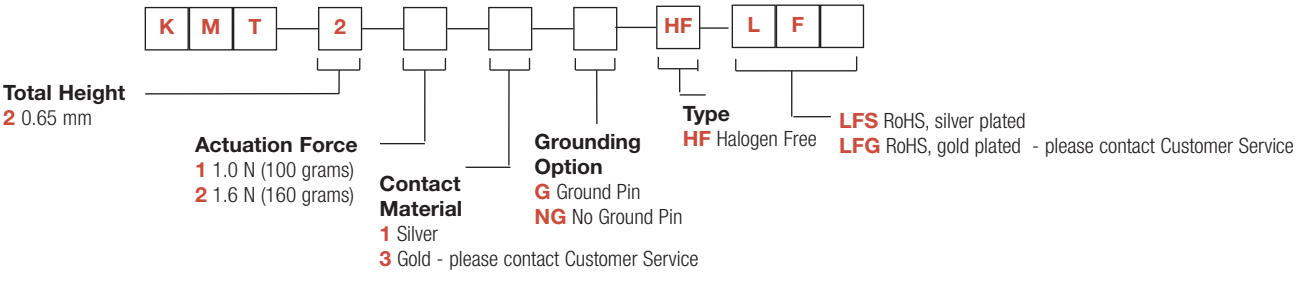

## KMT Series – No Ground Pin

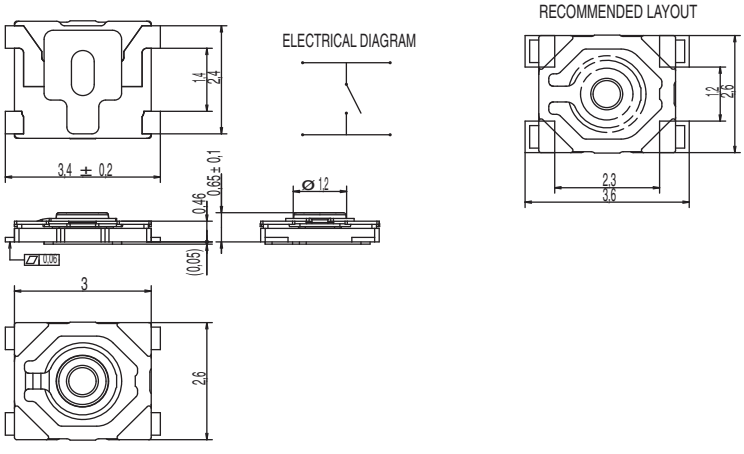


## KMT Series – With Ground Pin

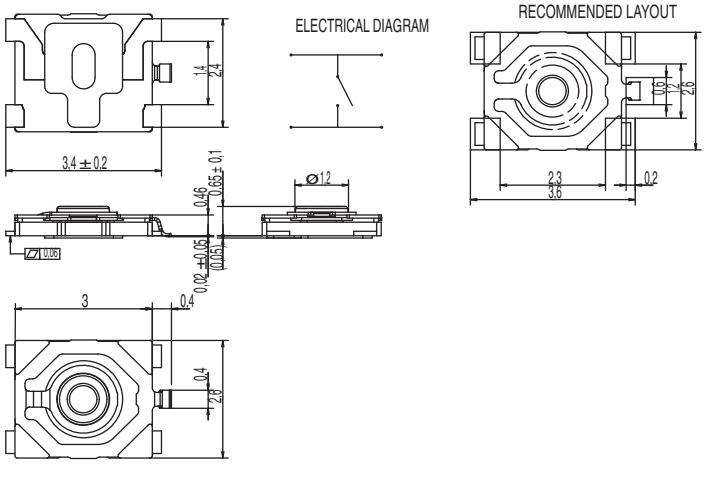


## TAPE & REEL

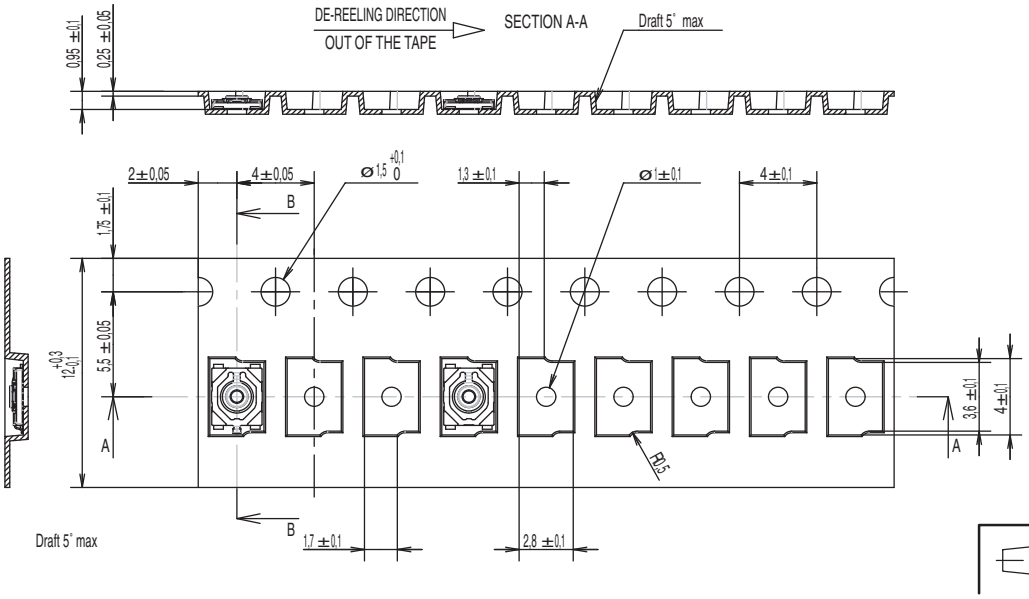


First Angle Projection

*Dimensions are shown: mm*
*Specifications and dimensions subject to change*

# KMT0 Series
# Nano-Miniature SMT Top Actuated

## Features

- *Smallest footprint*
- *Smallest thickness with integrated actuator*
- *Extended life cycles*
- *IP68*
- *Ultra low current capabilities*

## Typical Applications

- *Mobile Phones*
- *Hearing Aids*
- *MP3 accessories*
- *Bluetooth Headset*
- *Automotive keyless entry system*
- *Smoke and CO detectors*
- *E-readers*
- *Home automation remote controls*

## Specification

FUNCTION: momentary action, normally open
CONTACT ARRANGEMENT: 1 make contact = SPST, N.O.
TERMINALS: J lead type for SMT

## Mechanical

TRAVEL (mm): 0.15 ± 0.1

| | Operating force Newtons (grams) | Tactile Feeling | Operating Life |
|---|---|---|---|
| KMT011NGJLHS | 1.0 (100) ± 25% | ≥ 10% | 300,000 |
| KMT021NGJLHS | 1.6 (160) ± 25% | ≥ 30% | 300,000 |
| KMT071NGJLHS | 2.3 (230) ± 25% | ≥ 30% | 300,000 |
| KMT031NGJLHS | 3.4 (340) ± 25% | ≥ 30% | 300,000 |

| | Operating force Newtons (grams) | Tactile Feeling | Operating Life |
|---|---|---|---|
| KMT012NGJLHS | 1.0 (100) ± 25% | ≥ 10% | 1,000,000 |
| KMT022NGJLHS | 1.6 (160) ± 25% | ≥ 30% | 600,000 |
| KMT072NGJLHS | 2.3 (230) ± 25% | ≥ 30% | 600,000 |

## Electrical

| | |
|---|---|
| MAXIMUM POWER: | 0.5 VA |
| MAXIMUM VOLTAGE: | 32 VDC |
| MINIMUM VOLTAGE: | 20 mV |
| MAXIMUM CURRENT DC: | 50 mA |
| MINIMUM CURRENT DC: | 1 mA |
| DIELECTRIC STRENGTH: | ≥ 250 Vrms (1mn) |
| CONTACT RESISTANCE: | ≤ 150 mΩ |
| INSULATION RESISTANCE: | ≥ 50 MΩ |
| BOUNCE TIME: | ≤ 6 ms |

## Environmental

OPERATING TEMPERATURE: -40˚C to 85˚C
STORAGE TEMPERATURE: -55˚C (10 days) +85˚C (4 days)

## Process

SOLDERING: This component is suited to the following methods:
– Infrared Reflow Soldering in accordance with IEC61760-1

## Packaging

In reels of 5,000 pieces.
Dimensions of reels according to EIA 481B
External diameter 180 mm

**NOTE**: Specifications listed above are for switches with standard options.
For information on specific and custom switches, consult Customer Service Center.

## Part Number Description

For any part number different from those listed above, please consult your local representative.

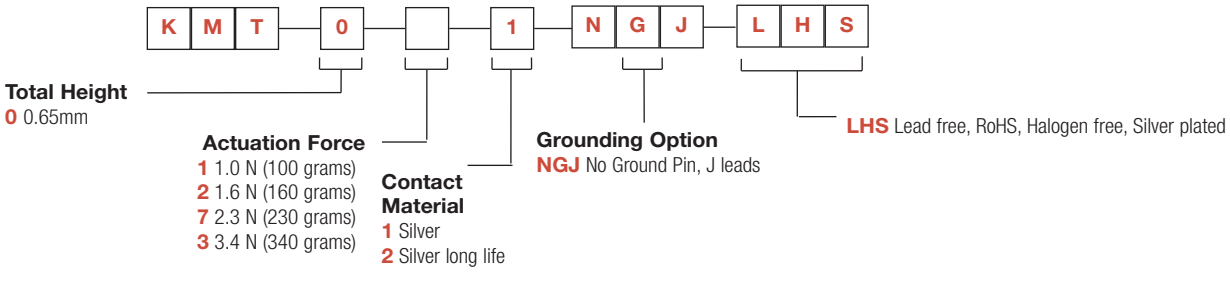

# KMT0 Series
# Nano-Miniature SMT Top Actuated

Minimum actuator diameter is 1.0 mm. It is recommended to enlarge this diameter to a full flat surface covering the switch.

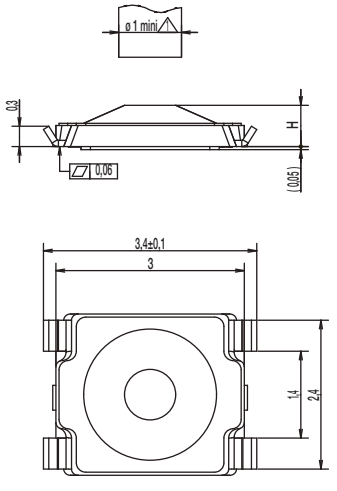


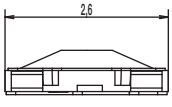


RECOMMENDED LAYOUT
ELECTRICAL DIAGRAM

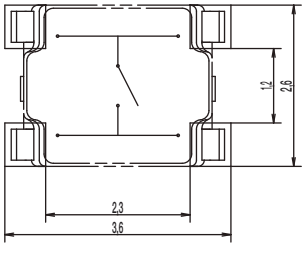


## TAPE & REEL

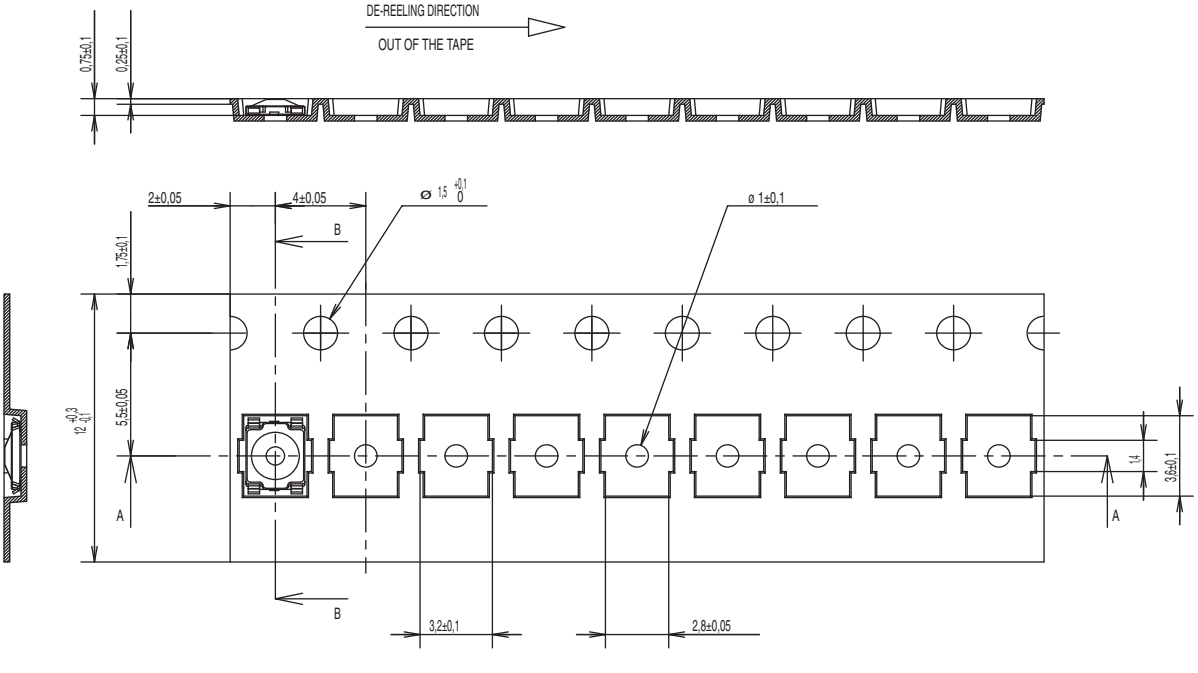


First Angle Projection

*Dimensions are shown: mm*
*Specifications and dimensions subject to change*

# KMR 2 Series
# Microminiature SMT Top Actuated

## *Features/Benefits*

- ***Small footprint***
- ***4 actuation forces***
- ***Excellent tactile feel***
- ***Ultra low current capabilities***
- ***IP40***

## *Typical Applications*

- ***Automotive***
- ***Industrial electronics***
- ***Medical equipment***

## Specification

FUNCTION: momentary action
CONTACT ARRANGEMENT: 1 make contact = SPST, N.O.
TERMINALS: Gullwing type for SMT

## Mechanical

| Type G and NG See description below | Operating force N (grs) | Operating life (cycles) | Travel (mm) |
|---|---|---|---|
| KMR211 LFS | 1.2 (120) ± 0.30 | 200,000 | 0.20 mm ± 0.1 |
| KMR211 ULC LFS | 1.2 (120) ± 0.30 | 200,000 | 0.20 mm ± 0.1 |
| KMR213 LFG | 1.2 (120) ± 0.30 | 200,000 | 0.20 mm ± 0.1 |
| KMR213 ULC LFG | 1.2 (120) ± 0.30 | 200,000 | 0.20 mm ± 0.1 |
| KMR221 LFS | 2.0 (200) ± 0.50 | 200,000 | 0.25 mm ± 0.1 |
| KMR221 ULC LFS | 2.0 (200) ± 0.50 | 200,000 | 0.25 mm ± 0.1 |
| KMR223 LFG | 2.0 (200) ± 0.50 | 200,000 | 0.25 mm ± 0.1 |
| KMR223 ULC LFG | 2.0 (200) ± 0.50 | 200,000 | 0.25 mm ± 0.1 |
| KMR231 LFS | 3.0 (300) ± 0.75 | 150,000 | 0.25 mm ± 0.1 |
| KMR231 ULC LFS | 3.0 (300) ± 0.75 | 150,000 | 0.25 mm ± 0.1 |
| KMR232 LFS | 3.0 (300) ± 0.75 | 300,000 | 0.25 mm ± 0.1 |
| KMR232 ULC LFS | 3.0 (300) ± 0.75 | 300,000 | 0.25 mm ± 0.1 |
| KMR233 LFG | 3.0 (300) ± 0.75 | 150,000 | 0.25 mm ± 0.1 |
| KMR233 ULC LFG | 3.0 (300) ± 0.75 | 150,000 | 0.25 mm ± 0.1 |
| KMR241 LFS | 4.0 (400) ± 1.00 | 100,000 | 0.30 mm ± 0.1 |
| KMR241 ULC LFS | 4.0 (400) ± 1.00 | 100,000 | 0.30 mm ± 0.1 |
| KMR242 LFS | 4.0 (400) ± 1.00 | 200,000 | 0.30 mm ± 0.1 |
| KMR242 ULC LFS | 4.0 (400) ± 1.00 | 200,000 | 0.30 mm ± 0.1 |
| KMR243 LFG | 4.0 (400) ± 1.00 | 100,000 | 0.30 mm ± 0.1 |
| KMR243 ULC LFG | 4.0 (400) ± 1.00 | 100,000 | 0.30 mm ± 0.1 |

## Electrical

| | Silver | Gold |
|---|---|---|
| MAXIMUM POWER: | 1 VA | 0.2 VA |
| MAXIMUM VOLTAGE: | 32 VDC | 32 VDC |
| MINIMUM VOLTAGE: | 20 mVDC | 20 mVDC |
| MAXIMUM CURRENT: | 50 mA | 10 mA |
| MINIMUM CURRENT: | 1 mA* | 1 mA* |
| DIELECTRIC STRENGTH: | ≥ 250 Vrms | |
| CONTACT RESISTANCE: | ≤ 100 mΩ | |
| INSULATION RESISTANCE: | ≥ 1GΩ | |
| BOUNCE TIME: | ≤ 3 ms | |

*For ULC version minimum current is 1µA at 1.8 VDC

## Environmental

| | Silver | Gold |
|---|---|---|
| OPERATING TEMPERATURE: | -40˚C to 85˚C | -40˚C to 125˚C |
| STORAGE TEMPERATURE: | -55˚C to 85˚C | -55˚C to 125˚C |

## Process

Infrared Reflow Soldering in accordance with IEC61760-1

## Packaging

In reels of 7,000 pieces
External diameter 330 mm ± 2 mm

**NOTE**: Specifications listed above are for switches with standard options.
For information on specific and custom switches, consult Customer Service Center.

TACTILE FEELING: KMR 2 series with actuation force in 2N - 3N - 4N: ≥ 30%
KMR 2 series with actuation force in 1.2N: ≥ 20%

## Part Number Description

For any part number different from those listed above, please consult your local representative.

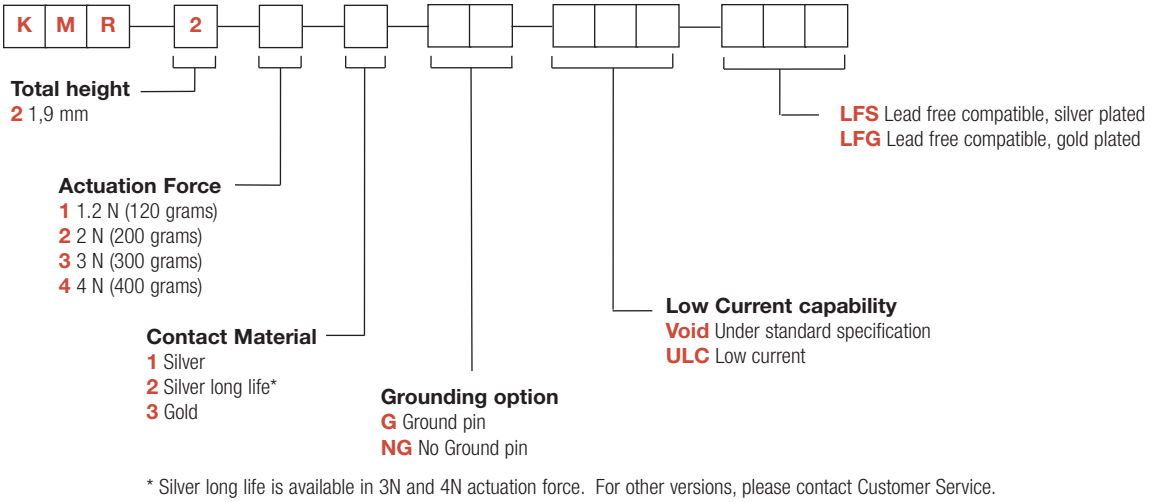


* Silver long life is available in 3N and 4N actuation force. For other versions, please contact Customer Service.

*Dimensions are shown: mm*
*Specifications and dimensions subject to change*

# KMR 2 Series
# Microminiature Tact Switch for SMT

## KMR 2 Series - 1.9 mm height

PCB layout shown with ground pin option

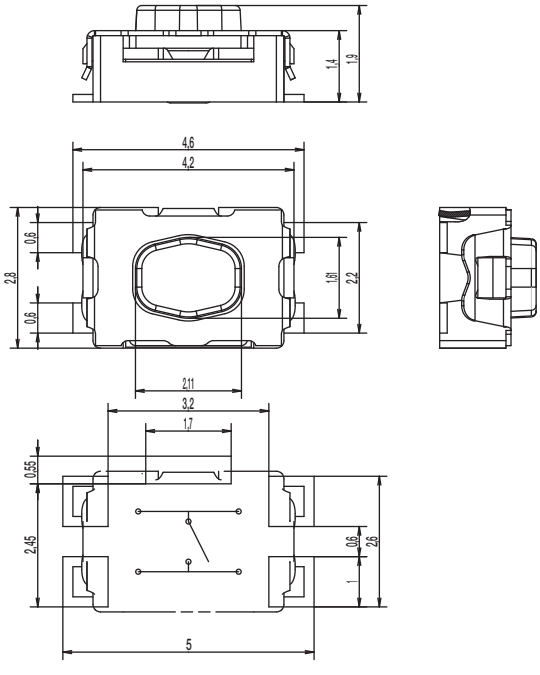


## TAPE & REEL

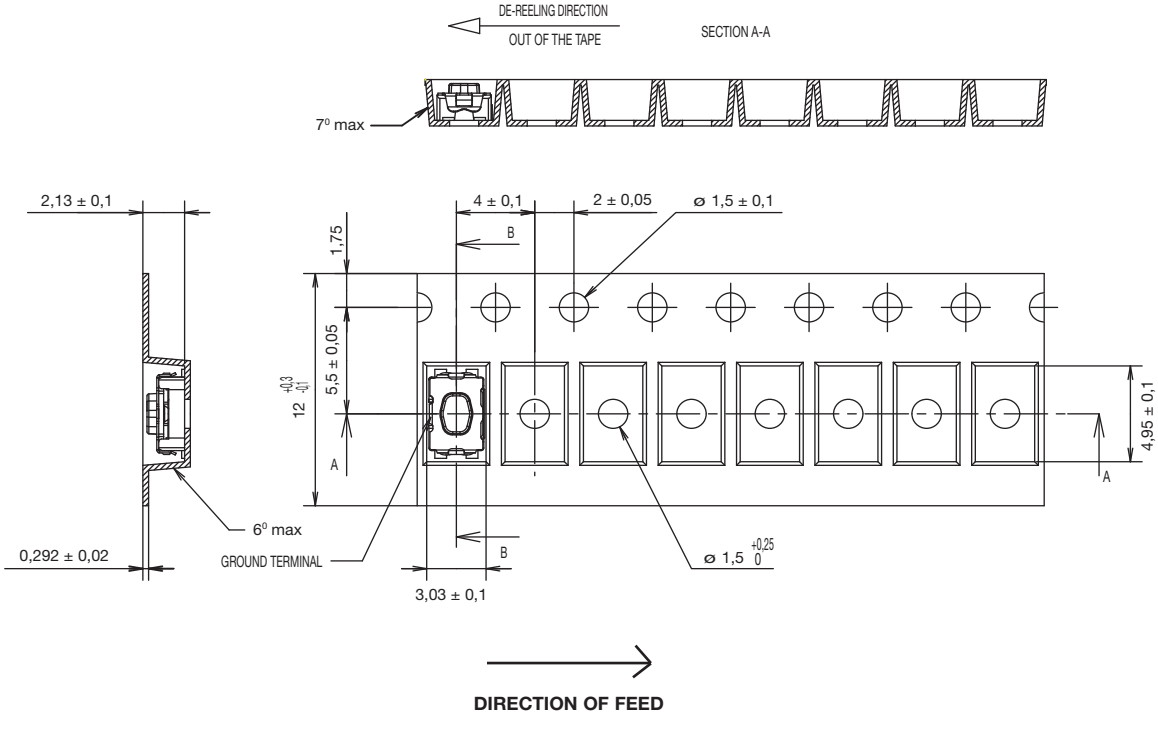


First Angle Projection

*Dimensions are shown: mm*
*Specifications and dimensions subject to change*

## *Features/Benefits*

- ***Small footprint***
- ***4 actuation forces***
- ***Excellent tactile feel***
- ***Ultra low current capabilities***
- ***IP40***

## *Typical Applications*

- ***Automotive***
- ***Industrial electronics***
- ***Medical equipment***

## Specification

FUNCTION: momentary action
CONTACT ARRANGEMENT: 1 make contact = SPST, N.O.
TERMINALS: Gullwing type for SMT

## Mechanical

| Type G and NG See description below | Operating force N (grs) | Operating life (cycles) | Travel (mm) |
|---|---|---|---|
| KMR411 LFS | 1.2 (120) ± 0.30 | 100,000 | 0.20 mm ± 0.1 |
| KMR411 ULC LFS | 1.2 (120) ± 0.30 | 100,000 | 0.20 mm ± 0.1 |
| KMR413 LFG | 1.2 (120) ± 0.30 | 100,000 | 0.20 mm ± 0.1 |
| KMR413 ULC LFG | 1.2 (120) ± 0.30 | 100,000 | 0.20 mm ± 0.1 |
| KMR421 LFS | 2.0 (200) ± 0.50 | 100,000 | 0.25 mm ± 0.1 |
| KMR421 ULC LFS | 2.0 (200) ± 0.50 | 100,000 | 0.25 mm ± 0.1 |
| KMR423 LFG | 2.0 (200) ± 0.50 | 100,000 | 0.25 mm ± 0.1 |
| KMR423 ULC LFG | 2.0 (200) ± 0.50 | 100,000 | 0.25 mm ± 0.1 |
| KMR431 LFS | 3.0 (300) ± 0.75 | 100,000 | 0.25 mm ± 0.1 |
| KMR431 ULC LFS | 3.0 (300) ± 0.75 | 100,000 | 0.25 mm ± 0.1 |
| KMR432 LFS | 3.0 (300) ± 0.75 | 300,000 | 0.25 mm ± 0.1 |
| KMR432ULC LFS | 3.0 (300) ± 0.75 | 300,000 | 0.25 mm ± 0.1 |
| KMR433 LFG | 3.0 (300) ± 0.75 | 100,000 | 0.25 mm ± 0.1 |
| KMR433ULC LFG | 3.0 (300) ± 0.75 | 100,000 | 0.25 mm ± 0.1 |
| KMR441 LFS | 4.0 (400) ± 1.00 | 100,000 | 0.30 mm ± 0.1 |
| KMR441 ULC LFS | 4.0 (400) ± 1.00 | 100,000 | 0.30 mm ± 0.1 |
| KMR442 LFS | 4.0 (400) ± 1.00 | 200,000 | 0.30 mm ± 0.1 |
| KMR442 ULC LFS | 4.0 (400) ± 1.00 | 200,000 | 0.30 mm ± 0.1 |
| KMR443 LFG | 4.0 (400) ± 1.00 | 100,000 | 0.30 mm ± 0.1 |
| KMR443 ULC LFG | 4.0 (400) ± 1.00 | 100,000 | 0.30 mm ± 0.1 |

## Electrical

| | Silver | Gold |
|---|---|---|
| MAXIMUM POWER: | 1 VA | 0.2 VA |
| MAXIMUM VOLTAGE: | 32 VDC | 32 VDC |
| MINIMUM VOLTAGE: | 20 mVDC | 20 mVDC |
| MAXIMUM CURRENT: | 50 mA | 10 mA |
| MINIMUM CURRENT: | 1 mA* | 1 mA* |
| DIELECTRIC STRENGTH: | ≥ 250 Vrms | |
| CONTACT RESISTANCE: | ≤ 100 mΩ | |
| INSULATION RESISTANCE: | ≥ 1GΩ | |
| BOUNCE TIME: | ≤ 3 ms | |

*For ULC version minimum current is 1µA at 1.8 VDC

## Environmental

| | Silver | Gold |
|---|---|---|
| OPERATING TEMPERATURE: | -40˚C to 85˚C | -40˚C to 125˚C |
| STORAGE TEMPERATURE: | -55˚C to 85˚C | -55˚C to 125˚C |

## Process

Infrared Reflow Soldering in accordance with IEC61760-1

## Packaging

In reels of 6,000 pieces
External diameter 330 mm ± 2 mm

**NOTE**: Specifications listed above are for switches with standard options.
For information on specific and custom switches, consult Customer Service Center.

TACTILE FEELING: KMR 4 series with actuation force in 2N - 3N - 4N: ≥ 25%
KMR 4 series with actuation force in 1.2N: ≥ 20%

## Part Number Description

For any part number different from those listed above, please consult your local representative.

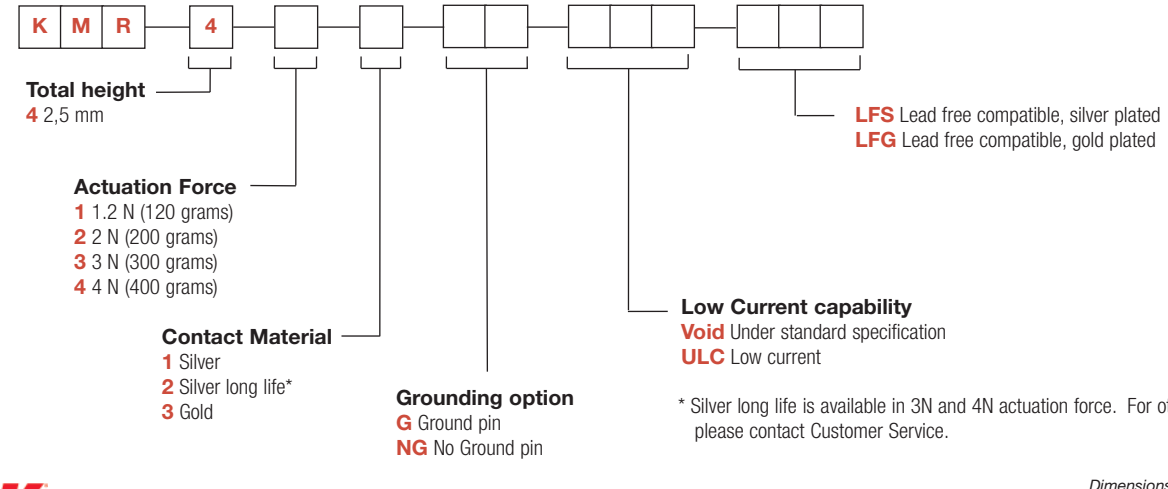


* Silver long life is available in 3N and 4N actuation force. For other versions, please contact Customer Service.

*Dimensions are shown: mm*
*Specifications and dimensions subject to change*

## KMR 4 Series - 2.5 mm height

PCB layout shown with ground pin option

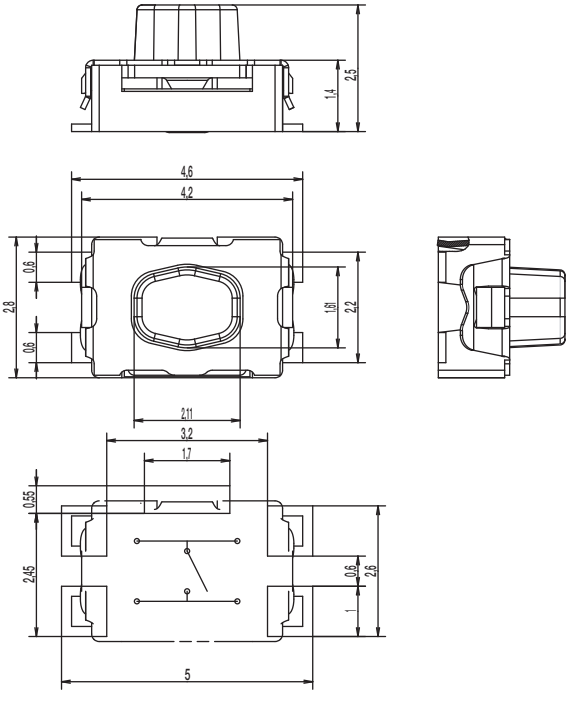


## TAPE & REEL

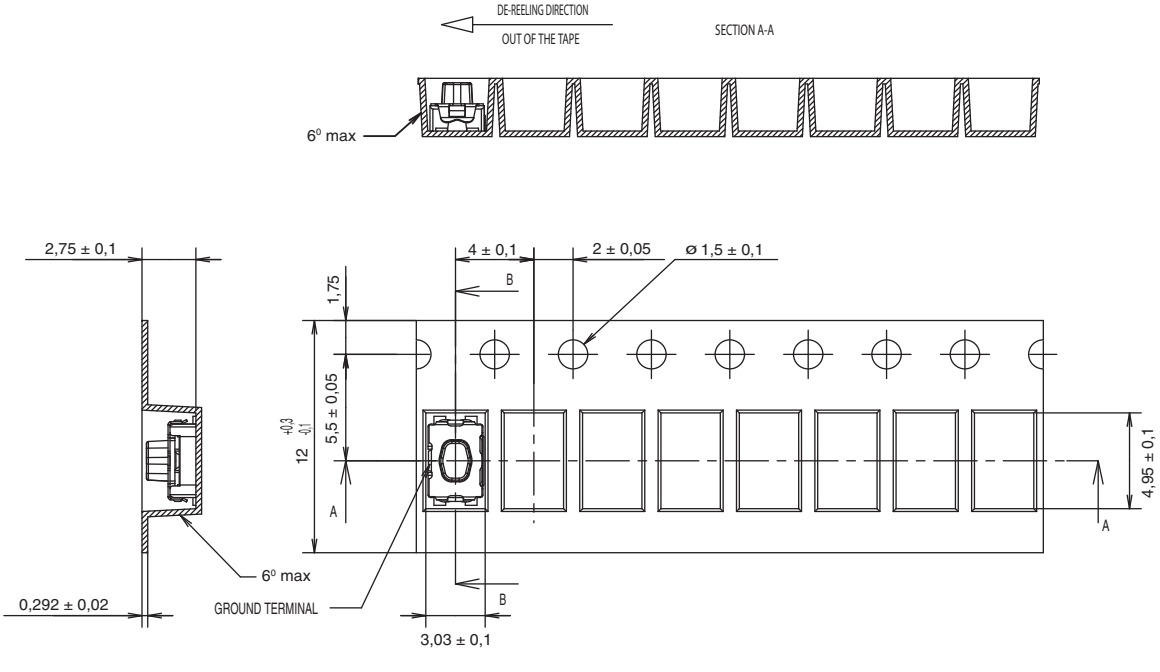


First Angle Projection

*Dimensions are shown: mm*
*Specifications and dimensions subject to change*

## Features/Benefits

- *Watertight IP67*
- *Standard and long life versions*
- *No ground pin*
- *Ultra low current capabilities*
- *Excellent tactile feel*

## Typical Applications

- *Automotive*
- *Medical*
- *Consumer*
- *Industrial*

## Specification

FUNCTION: momentary action
CONTACT ARRANGEMENT: 1 make contact = SPST, N.O.
TERMINALS: Gullwing type for SMT

## Mechanical

| Type NG See description below | Operating force N (grs) | Operating life (cycles) | Travel (mm) |
|---|---|---|---|
| KMR611NG LFS | 1.2 (120) ± 0.30 | 200,000 | 0.20 mm ± 0.1 |
| KMR611NG ULC LFS | 1.2 (120) ± 0.30 | 200,000 | 0.20 mm ± 0.1 |
| KMR613NG LFG | 1.2 (120) ± 0.30 | 200,000 | 0.20 mm ± 0.1 |
| KMR613NG ULC LFG | 1.2 (120) ± 0.30 | 200,000 | 0.20 mm ± 0.1 |
| KMR621NG LFS | 2.0 (200) ± 0.50 | 200,000 | 0.25 mm ± 0.1 |
| KMR621NG ULC LFS | 2.0 (200) ± 0.50 | 200,000 | 0.25 mm ± 0.1 |
| KMR623NG LFG | 2.0 (200) ± 0.50 | 200,000 | 0.25 mm ± 0.1 |
| KMR623NG ULC LFG | 2.0 (200) ± 0.50 | 200,000 | 0.25 mm ± 0.1 |
| KMR631NG LFS | 3.0 (300) ± 0.75 | 150,000 | 0.25 mm ± 0.1 |
| KMR631NG ULC LFS | 3.0 (300) ± 0.75 | 150,000 | 0.25 mm ± 0.1 |
| KMR632NG LFS | 3.0 (300) ± 0.75 | 300,000 | 0.25 mm ± 0.1 |
| KMR632NG ULC LFS | 3.0 (300) ± 0.75 | 300,000 | 0.25 mm ± 0.1 |
| KMR633NG LFG | 3.0 (300) ± 0.75 | 150,000 | 0.25 mm ± 0.1 |
| KMR633NG ULC LFG | 3.0 (300) ± 0.75 | 150,000 | 0.25 mm ± 0.1 |
| KMR641NG LFS | 4.0 (400) ± 1.00 | 100,000 | 0.30 mm ± 0.1 |
| KMR641NG ULC LFS | 4.0 (400) ± 1.00 | 100,000 | 0.30 mm ± 0.1 |
| KMR642NG LFS | 4.0 (400) ± 1.00 | 200,000 | 0.30 mm ± 0.1 |
| KMR642NG ULC LFS | 4.0 (400) ± 1.00 | 200,000 | 0.30 mm ± 0.1 |
| KMR643NG LFG | 4.0 (400) ± 1.00 | 100,000 | 0.30 mm ± 0.1 |
| KMR643NG ULC LFG | 4.0 (400) ± 1.00 | 100,000 | 0.30 mm ± 0.1 |

TACTILE FEELING: KMR 6 series with actuation force in 2N - 3N - 4N: ≥ 30%
KMR 6 series with actuation force in 1.2N: ≥ 20%

## Electrical

| | Silver | Gold |
|---|---|---|
| MAXIMUM POWER: | 1 VA | 0.2 VA |
| MAXIMUM VOLTAGE: | 32 VDC | 32 VDC |
| MINIMUM VOLTAGE: | 20 mVDC | 20 mVDC |
| MAXIMUM CURRENT: | 50 mA | 10 mA |
| MINIMUM CURRENT: | 1 mA* | 1 mA* |
| DIELECTRIC STRENGTH: | ≥ 250 Vrms | |
| CONTACT RESISTANCE: | ≤ 100 mΩ | |
| INSULATION RESISTANCE: | ≥ 1GΩ | |
| BOUNCE TIME: | ≤ 3 ms | |

*For ULC version minimum current is 1µA at 1.8 VDC

## Environmental

| | Silver | Gold |
|---|---|---|
| OPERATING TEMPERATURE: | -40˚C to 85˚C | -40˚C to 125˚C |
| STORAGE TEMPERATURE: | -55˚C to 85˚C | -55˚C to 125˚C |

## Process

Infrared Reflow Soldering in accordance with IEC61760-1

## Packaging

In reels of 7,000 pieces
External diameter 330 mm ± 2 mm

**NOTE**: Specifications listed above are for switches with standard options.
For information on specific and custom switches, consult Customer Service Center.

## Part Number Description

For any part number different from those listed above, please consult your local representative.

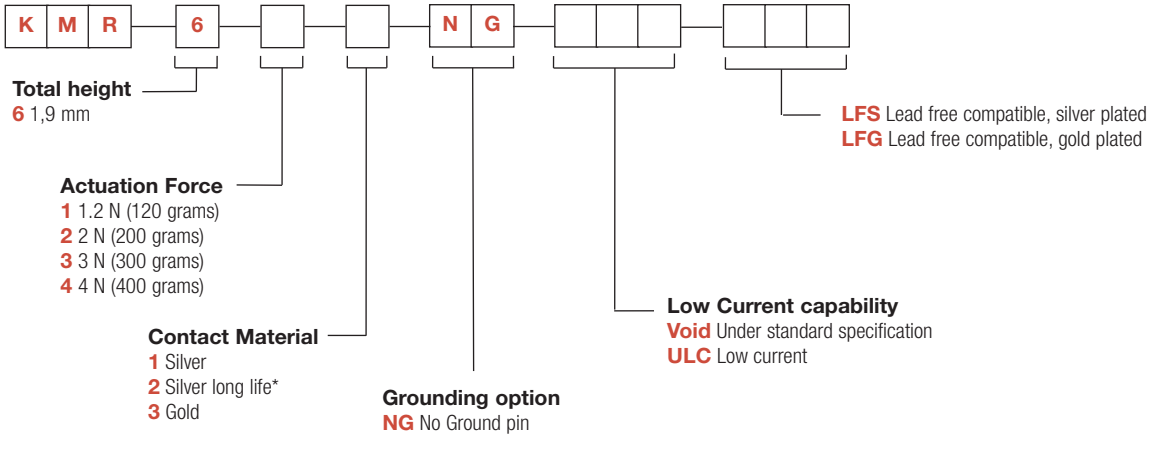


* Silver long life is available in 3N and 4N actuation force. For other versions, please contact Customer Service.

# KMR 6 Series
# Microminiature SMT Top Actuated IP67

## KMR 6 Series - 1.9 mm height

PCB layout shown with ground pin option

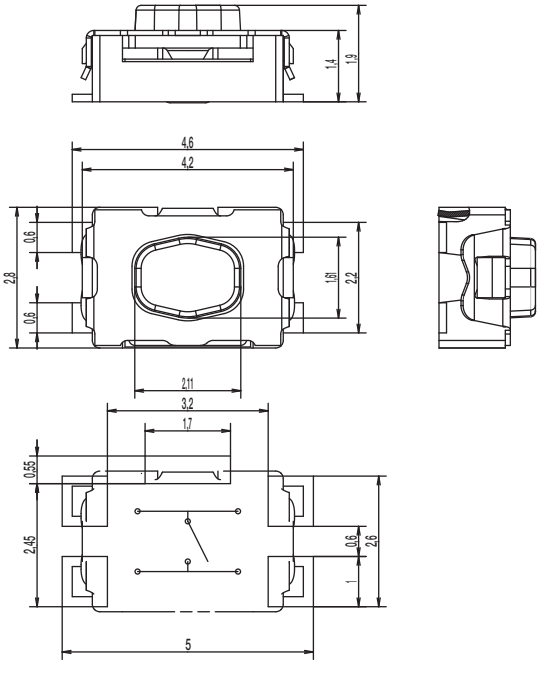


## TAPE & REEL

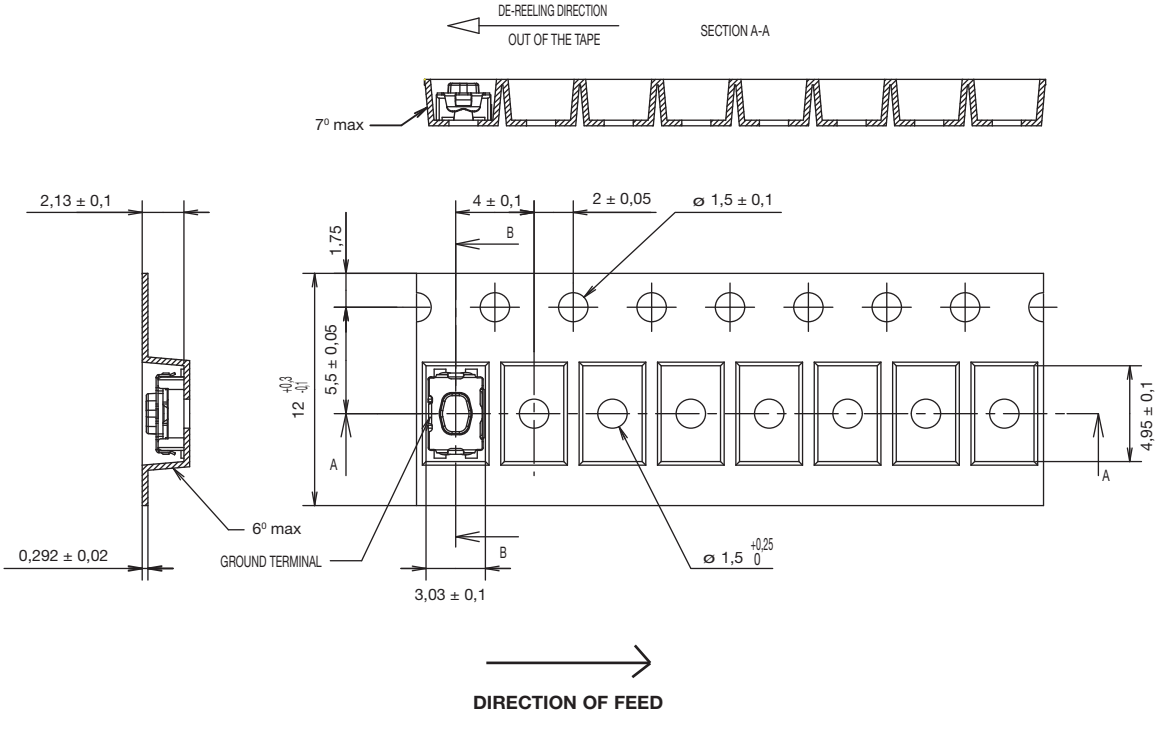

## Features/Benefits

- *Watertight IP67*
- *Standard and long life versions*
- *No ground pin*
- *Ultra low current capabilities*
- *Excellent tactile feel*

## Typical Applications

- *Automotive*
- *Medical*
- *Consumer*
- *Industrial*

## Specification

FUNCTION: momentary action
CONTACT ARRANGEMENT: 1 make contact = SPST, N.O.
TERMINALS: Gullwing type for SMT

## Mechanical

| Type NG See description below | Operating force N (grs) | Operating life (cycles) | Travel (mm) |
|---|---|---|---|
| KMR711NG LFS | 1.2 (120) ± 0.30 | 100,000 | 0.20 mm ± 0.1 |
| KMR711NG ULC LFS | 1.2 (120) ± 0.30 | 100,000 | 0.20 mm ± 0.1 |
| KMR713NG LFG | 1.2 (120) ± 0.30 | 100,000 | 0.20 mm ± 0.1 |
| KMR713NG ULC LFG | 1.2 (120) ± 0.30 | 100,000 | 0.20 mm ± 0.1 |
| KMR721NG LFS | 2.0 (200) ± 0.50 | 100,000 | 0.25 mm ± 0.1 |
| KMR721NG ULC LFS | 2.0 (200) ± 0.50 | 100,000 | 0.25 mm ± 0.1 |
| KMR723NG LFG | 2.0 (200) ± 0.50 | 100,000 | 0.25 mm ± 0.1 |
| KMR723NG ULC LFG | 2.0 (200) ± 0.50 | 100,000 | 0.25 mm ± 0.1 |
| KMR731NG LFS | 3.0 (300) ± 0.75 | 100,000 | 0.25 mm ± 0.1 |
| KMR731NG ULC LFS | 3.0 (300) ± 0.75 | 100,000 | 0.25 mm ± 0.1 |
| KMR732NG LFS | 3.0 (300) ± 0.75 | 300,000 | 0.25 mm ± 0.1 |
| KMR732NG ULC LFS | 3.0 (300) ± 0.75 | 300,000 | 0.25 mm ± 0.1 |
| KMR733NG LFG | 3.0 (300) ± 0.75 | 100,000 | 0.25 mm ± 0.1 |
| KMR733NG ULC LFG | 3.0 (300) ± 0.75 | 100,000 | 0.25 mm ± 0.1 |
| KMR741NG LFS | 4.0 (400) ± 1.00 | 100,000 | 0.30 mm ± 0.1 |
| KMR741NG ULC LFS | 4.0 (400) ± 1.00 | 100,000 | 0.30 mm ± 0.1 |
| KMR742NG LFS | 4.0 (400) ± 1.00 | 200,000 | 0.30 mm ± 0.1 |
| KMR742NG ULC LFS | 4.0 (400) ± 1.00 | 200,000 | 0.30 mm ± 0.1 |
| KMR743NG LFG | 4.0 (400) ± 1.00 | 100,000 | 0.30 mm ± 0.1 |
| KMR743NG ULC LFG | 4.0 (400) ± 1.00 | 100,000 | 0.30 mm ± 0.1 |

## Electrical

| | Silver | Gold |
|---|---|---|
| MAXIMUM POWER: | 1 VA | 0.2 VA |
| MAXIMUM VOLTAGE: | 32 VDC | 32 VDC |
| MINIMUM VOLTAGE: | 20 mVDC | 20 mVDC |
| MAXIMUM CURRENT: | 50 mA | 10 mA |
| MINIMUM CURRENT: | 1 mA* | 1 mA* |
| DIELECTRIC STRENGTH: | ≥ 250 Vrms | |
| CONTACT RESISTANCE: | ≤ 100 mΩ | |
| INSULATION RESISTANCE: | ≥ 1GΩ | |
| BOUNCE TIME: | ≤ 3 ms | |

*For ULC version minimum current is 1µA at 1.8 VDC

## Environmental

| | Silver | Gold |
|---|---|---|
| OPERATING TEMPERATURE: | -40°C to 85°C | -40°C to 125°C |
| STORAGE TEMPERATURE: | -55°C to 85°C | -55°C to 125°C |

## Process

Infrared Reflow Soldering in accordance with IEC61760-1

## Packaging

In reels of 6,000 pieces
External diameter 330 mm ± 2 mm

**NOTE**: Specifications listed above are for switches with standard options.
For information on specific and custom switches, consult Customer Service Center.

TACTILE FEELING: KMR 7 series with actuation force in 2N - 3N - 4N: ≥ 25%
KMR 7 series with actuation force in 1.2N: ≥ 20%

## Part Number Description

For any part number different from those listed above, please consult your local representative.

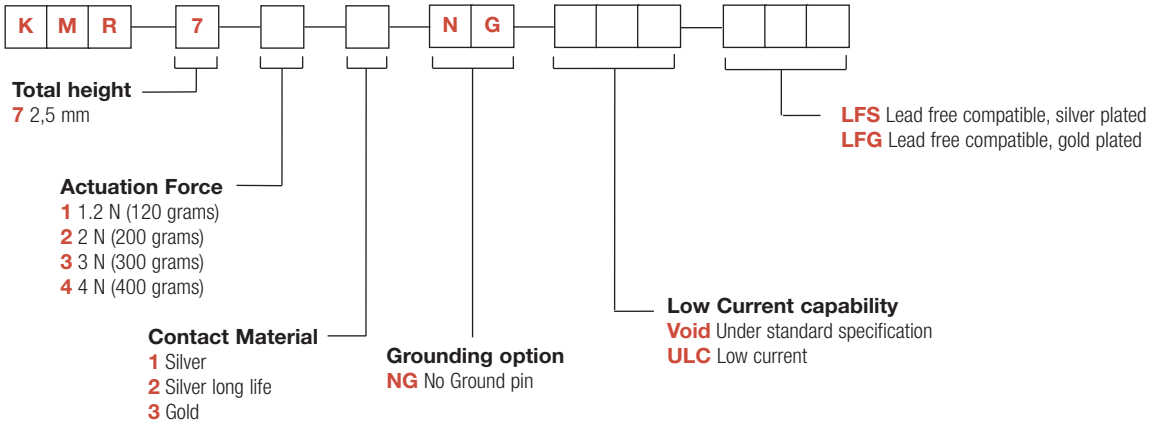


* Silver long life is available in 3N and 4N actuation force. For other versions, please contact Customer Service.

*Dimensions are shown: mm*
*Specifications and dimensions subject to change*

## KMR 7 Series - 2.5 mm height

PCB layout shown with ground pin option

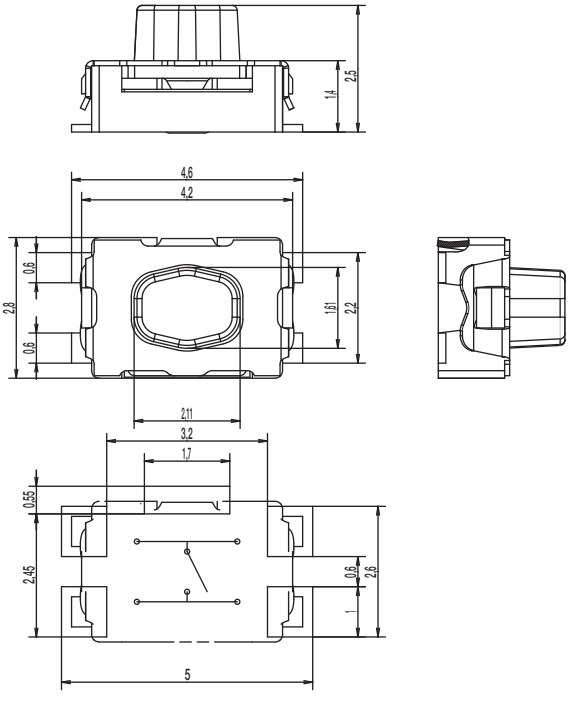


## TAPE & REEL

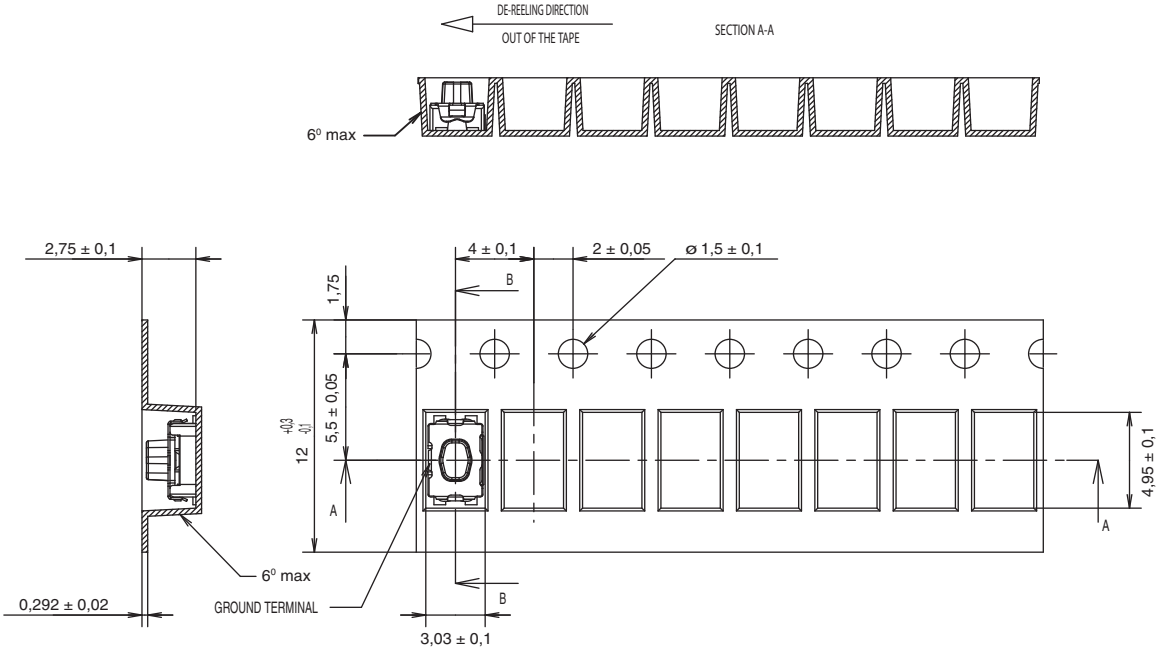

## Features/Benefits

- *Small footprint*
- *3 actuation forces*
- *Excellent tactile feel*
- *Hard actuator*
- *IP40*

## Typical Applications

- *Automotive*
- *Mobile phones*
- *Industrial electronics*
- *Medical equipment*

## Specification

FUNCTION: momentary action
CONTACT ARRANGEMENT: 1 make contact = SPST, N.O.
TERMINALS: Gullwing type for SMT

## Mechanical

| Type G and NG See description below | Operating force N (grs) | Operating life (cycles) | Travel (mm) |
|---|---|---|---|
| KMR811G LFS | 1.2 (120) ± 0.30 | 200,000 | 0.20 mm ± 0.1 |
| KMR821G LFS | 2.0 (200) ± 0.50 | 200,000 | 0.25 mm ± 0.1 |
| KMR831G LFS | 3.0 (300) ± 0.75 | 150,000 | 0.25 mm ± 0.1 |
| KMR831NG ULC LFS | 3.0 (300) ± 0.75 | 150,000 | 0.25 mm ± 0.1 |

TACTILE FEELING:

KMR 8 series with actuation force in 2N - 3N - 4N: ≥ 30%
KMR 8 series with actuation force in 1.2N: ≥ 20%

## Electrical

| | Silver |
|---|---|
| MAXIMUM POWER: | 1 VA |
| MAXIMUM VOLTAGE: | 32 VDC |
| MINIMUM VOLTAGE: | 20 mVDC |
| MAXIMUM CURRENT: | 50 mA |
| MINIMUM CURRENT: | 1 mA* |
| DIELECTRIC STRENGTH: | ≥ 250 Vrms |
| CONTACT RESISTANCE: | ≤ 100 mΩ |
| INSULATION RESISTANCE: | ≥ 1GΩ |
| BOUNCE TIME: | ≤ 3 ms |

*For ULC version minimum current is 1µA at 1.8 VDC

## Environmental

| | Silver |
|---|---|
| OPERATING TEMPERATURE: | -40˚C to 85˚C |
| STORAGE TEMPERATURE: | -55˚C to 85˚C |

## Process

Infrared Reflow Soldering in accordance with IEC61760-1

## Packaging

In reels of 7,000 pieces
External diameter 330 mm ± 2 mm

**NOTE**: Specifications listed above are for switches with standard options.
For information on specific and custom switches, consult Customer Service Center.

## Part Number Description

For any part number different from those listed above, please consult your local representative.

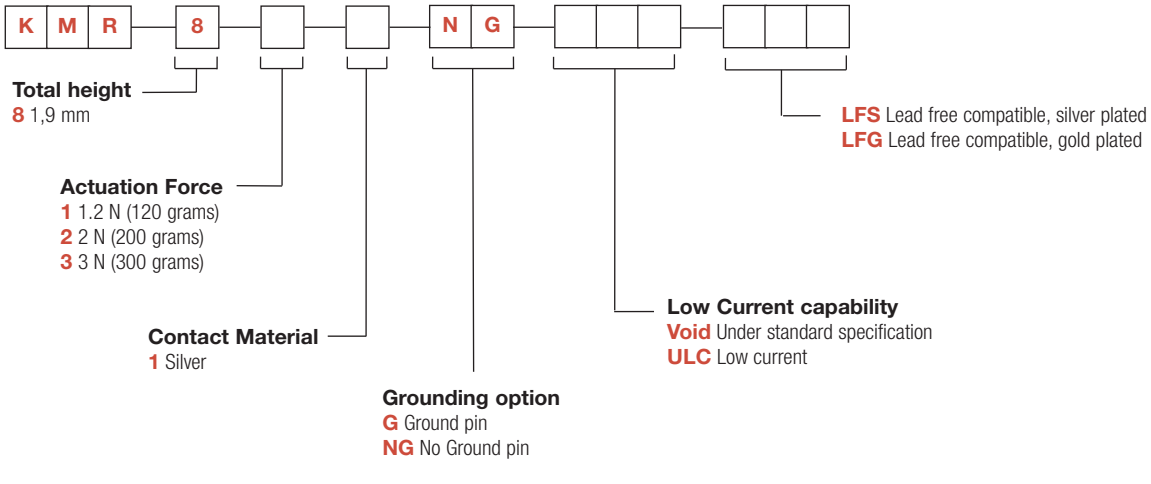

# KMR 8 Series
# Microminiature SMT Top Actuated

## G - Ground Pin

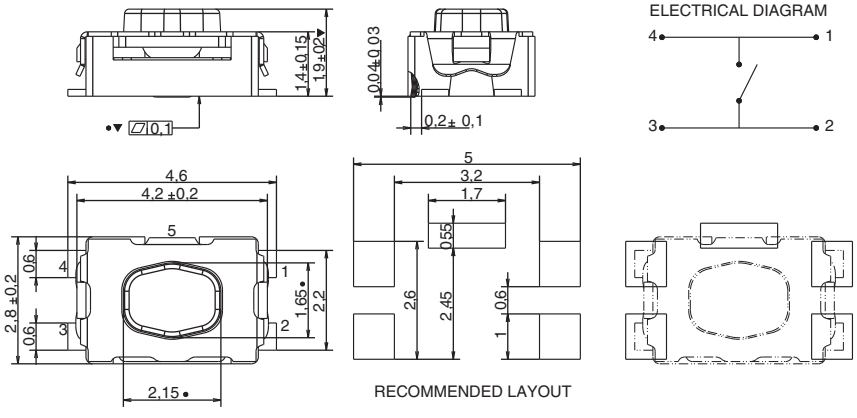


## NG - No Ground Pin

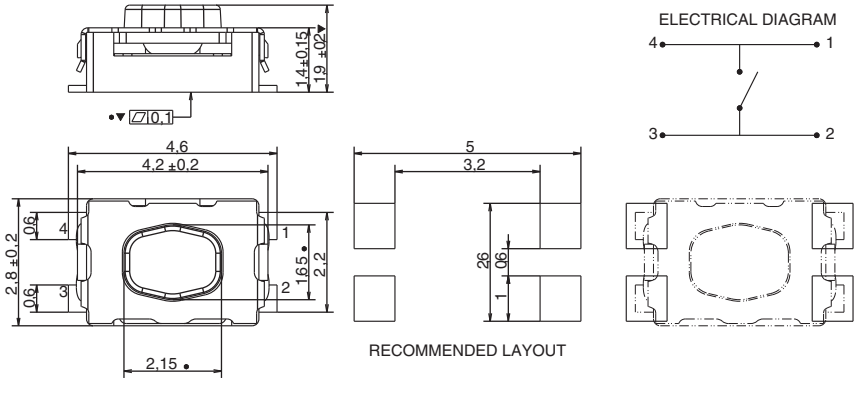


## TAPE & REEL

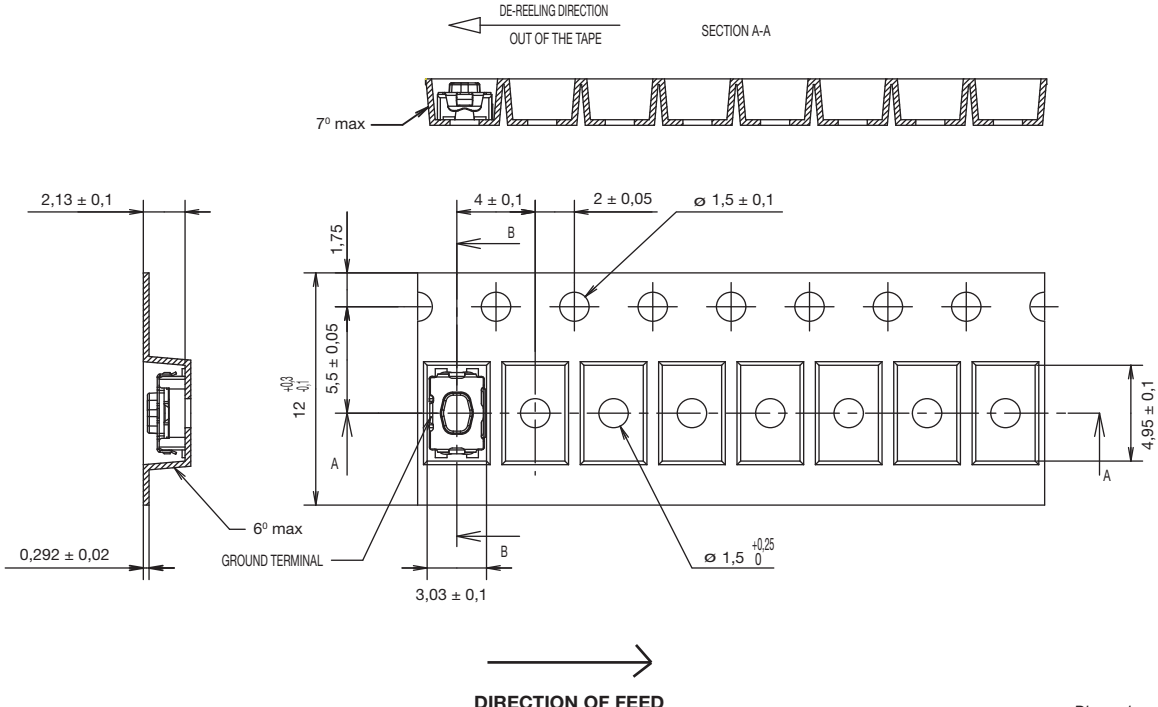


*Dimensions are shown: mm*
*Specifications and dimensions subject to change*

## Features/Benefits

- *Compact size*
- *Excellent tactile feel*
- *ESD protection*
- *Positioning pegs for stability*
- *RoHS compliant and compatible*

## Typical Applications

- *Mobile phones*
- *Medical handheld monitors*
- *Consumer electronics*
- *Telecommunication networks*

## Specification

FUNCTION: Momentary
CONTACT ARRANGEMENT: SPST, N.O.
TERMINALS: Gullwing type for SMT
IP40 Sealed

## Mechanical

OVERLOAD: 20N
TACTILE FEELING: 15% min. for the 2N version
25% min for the 2.5N version

| Type | Operating force Newtons (grams) | Operating life (operations) | Travel |
|---|---|---|---|
| KMS221G/GP | 2N (200) ± 0.5 | 100 K cycles | 0,25 ± 0,15 |
| KMS223G/GP | 2N (200) ± 0.5 | 100 K cycles | 0,25 ± 0,15 |
| KMS231G/GP | 3N (300) ± 0.6 | 100 K cycles | 0,3 ± 0,15 |
| KMS233G/GP | 3N (300) ± 0.6 | 100 K cycles | 0,3 ± 0,15 |

**Note**: Specifications listed above are for switches with standard options. For information on specific and custom switches, consult Customer Service Center.

## Packaging

Tape and reels in reels of 3,000 pieces.
External diameter 330mm ± 2mm.

## Electrical

| | Silver | Gold |
|---|---|---|
| MAXIMUM POWER: | 1 VA | 0.2 VA |
| MAXIMUM VOLTAGE: | 32 VDC | 32 VDC |
| MAXIMUM CURRENT DC: | 50 mA | 10 mA |
| MINIMUM CURRENT DC: | 1 mA | 1 mA |

DIELECTRIC STRENGTH: 250 VDC
CONTACT RESISTANCE: ≤100 mΩ
INSULATION RESISTANCE: $10^9$ Ω
BOUNCE TIME: ≤ 3 ms

## Environmental

| | Silver | Gold |
|---|---|---|
| OPERATING TEMPERATURE: | -40˚C to 85˚C | -40˚C to 125˚C |
| STORAGE TEMPERATURE: | -55˚C to 85˚C | -55˚C to 125˚C |

## Process

Infared reflow soldering in accordance with IEC 61760-1

## How To Order

Our easy build-a-switch concept allows you to mix and match options to create the switch you need. To order, select desired option from each category and place it in the appropriate box.

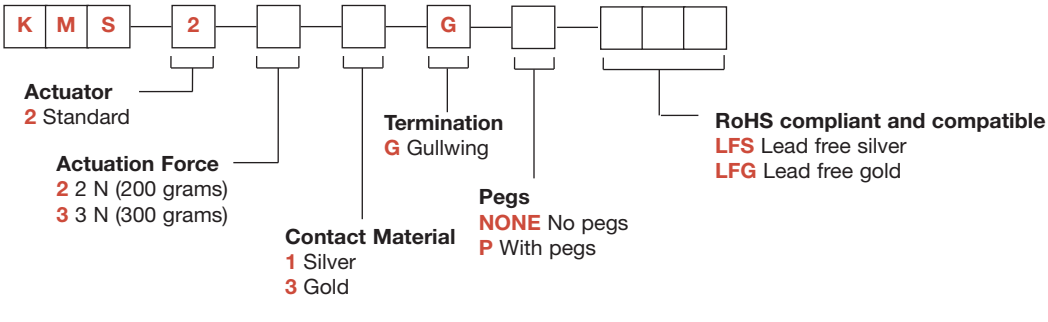

# KMS Series
# Microminiature SMT Side Actuated

## KMS

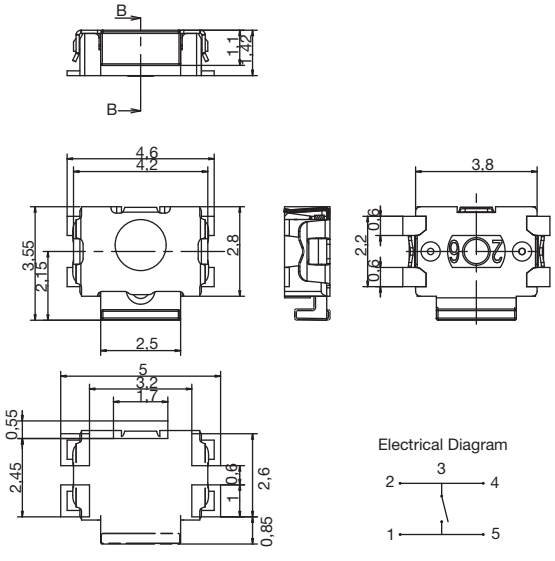


## KMS WITH PEGS

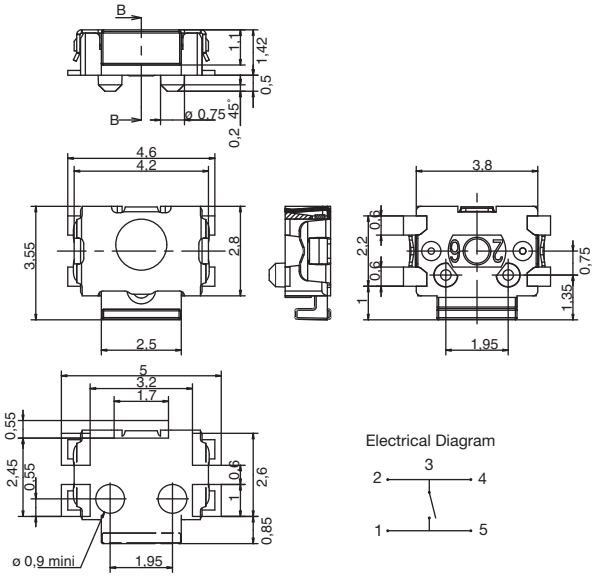


## TAPE & REEL

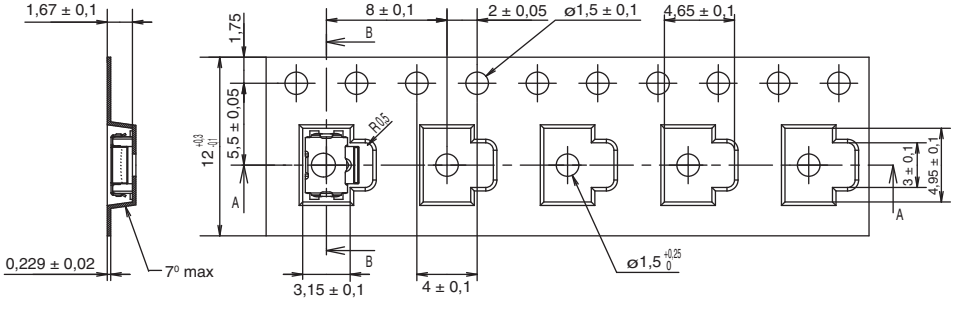


**WITH PEGS**

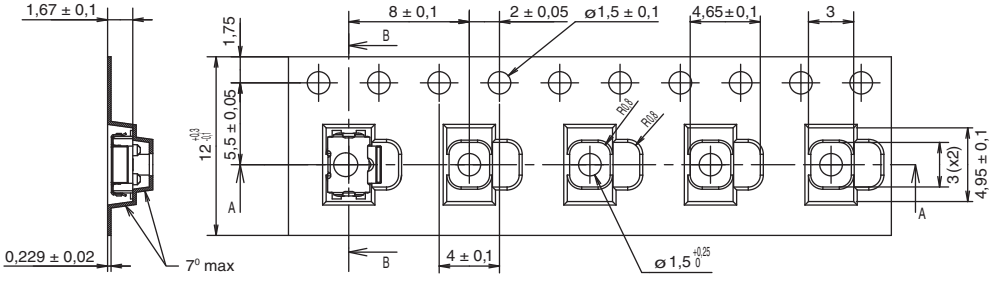


**DIRECTION OF FEED**

First Angle Projection

*Dimensions are shown: mm*
*Specifications and dimensions subject to change*

# PTS 525 Series
# Microminiature Tact Switch for SMT

## Features/Benefits

- ***0.8 & 1.5 mm actuator height***
- ***Ruggedized package in a compact size***
- ***High number of cycles***

## Typical Applications

- ***Consumer products***
- ***Instrumentation***
- ***Remote controls***

## Specification

FUNCTION: Momentary action
CONTACT ARRANGEMENT: 1 make contact = SPST, N.O.

## Electrical

| | |
|---|---|
| MAXIMUM VOLTAGE: | 15 VDC |
| MAXIMUM CURRENT DC: | 20 mA |
| DIELECTRIC STRENGTH: | 250 VA C (1mn) |
| CONTACT RESISTANCE: | ≤ 100 mΩ |
| INSULATION RESISTANCE: | ≥ 100 MΩ |
| BOUNCE TIME: | ≤ 10 ms |

## Environmental

OPERATING TEMPERATURE: -20˚C to 70˚C

## Process

SOLDERING: This component is suited to the following methods:
Infrared Reflow Soldering in accordance with IEC61760-1

## Packaging

Switches in reels of:
5,000 pieces in 0.8 mm height
4,000 pieces in 1.5 mm height
Dimensions of reels according to EIA 481B
External diameter 330 mm

**NOTE**: Specifications listed above are for switches with standard options.
For information on specific and custom switches, consult Customer Service Center.

## How To Order

Please see chart below for full part numbers.

| Part Number | Height (mm) | Leads Shape | Ground Pin | Force | Travel (mm) | Operating Life |
|---|---|---|---|---|---|---|
| PTS525 SM08 SMTR 2 LFS | 0.8 | G | No | 160 gf ± 50 gf | 0.25 ± 0.2 | 1,000,000 |
| PTS525 SK08 SMTR 2 LFS | 0.8 | G | No | 260 gf ± 50 gf | 0.25 ± 0.2 | 200,000 |
| PTS525 SM15 SMTR 2 LFS | 1.5 | G | No | 160 gf ± 50 gf | 0.25 ± 0.2 | 1,000,000 |
| PTS525 SK15 SMTR 2 LFS | 1.5 | G | No | 260 gf ± 50 gf | 0.25 ± 0.2 | 500,000 |
| PTS525 SMG15 SMTR 2 LFS | 1.5 | G | Yes | 160 gf ± 50 gf | 0.25 ± 0.2 | 1,000,000 |
| PTS525 SKG15 SMTR 2 LFS | 1.5 | G | Yes | 260 gf ± 50 gf | 0.25 ± 0.2 | 500,000 |
| PTS525 SMG15J SMTR 2 LFS | 1.5 | J | Yes | 160 gf ± 50 gf | 0.25 ± 0.2 | 1,000,000 |
| PTS525 SKG15J SMTR 2 LFS | 1.5 | J | Yes | 260 gf ± 50 gf | 0.25 ± 0.2 | 500,000 |

First Angle Projection

*Dimensions are shown: mm*
*Specifications and dimensions subject to change*

# PTS 525 Series
# Microminiature Tact Switch for SMT

## PTS525 SM08 SMTR2 LFS
## PTS525 SK08 SMTR2 LFS

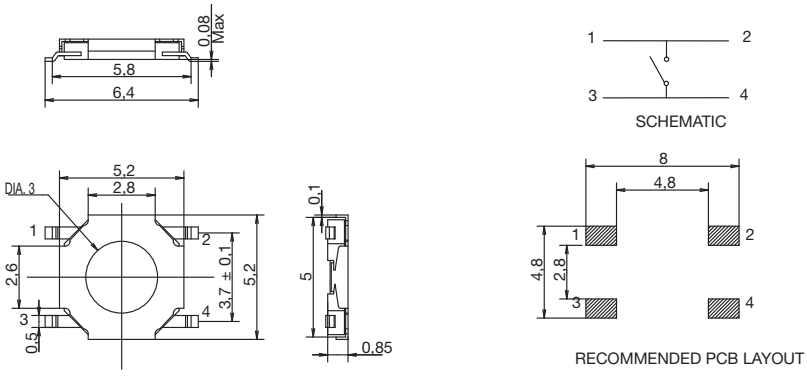


## PTS525 SM15 SMTR2 LFS
## PTS525 SK15 SMTR2 LFS

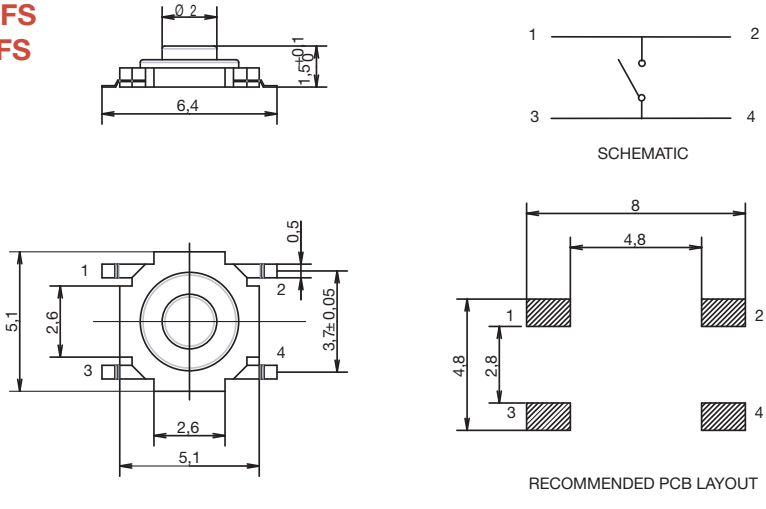


## PTS525 SMG15 SMTR2 LFS
## PTS525 SKG15 SMTR2 LFS

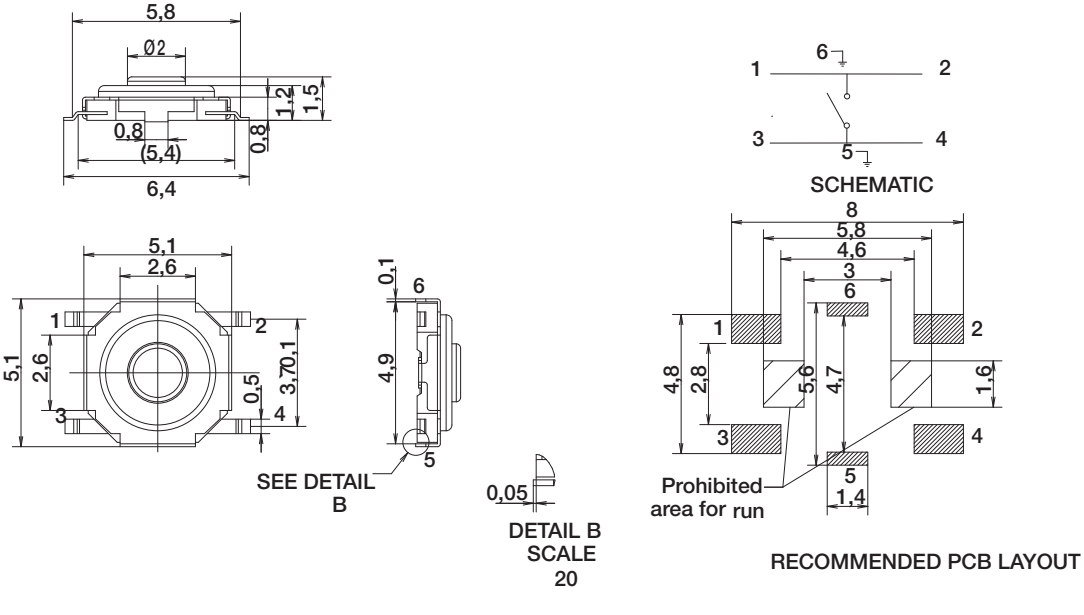


*Dimensions are shown: mm*
*Specifications and dimensions subject to change*

## PTS525 SMG15J SMTR2 LFS
## PTS525 SKG15J SMTR2 LFS

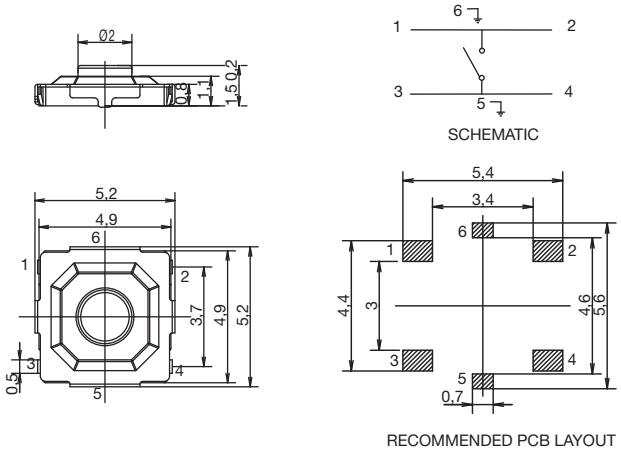


## TAPE & REEL

### 0.8 mm height
5,000 pieces per reel

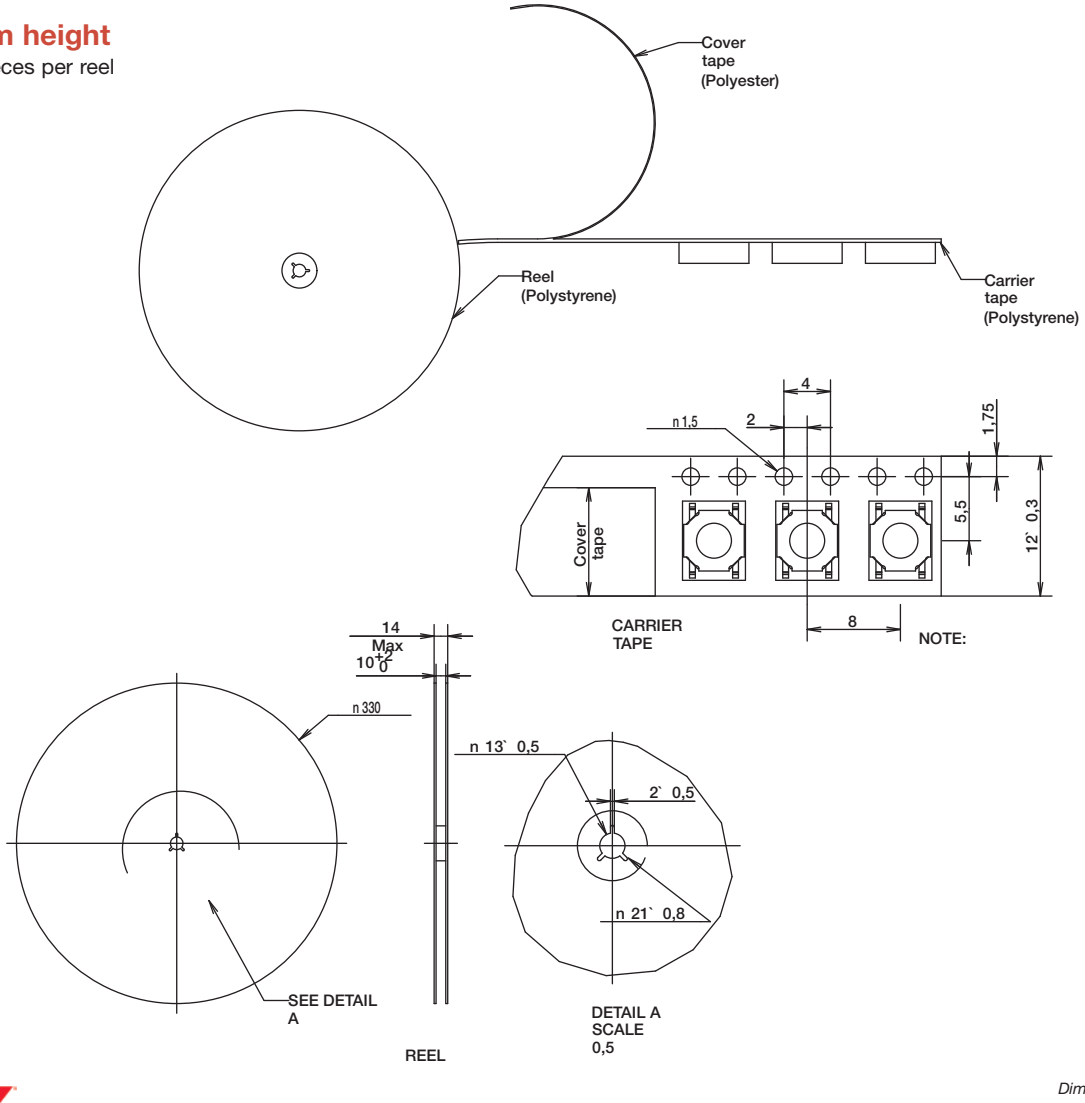

## TAPE & REEL



### 1.5 mm height

4,000 pieces per reel

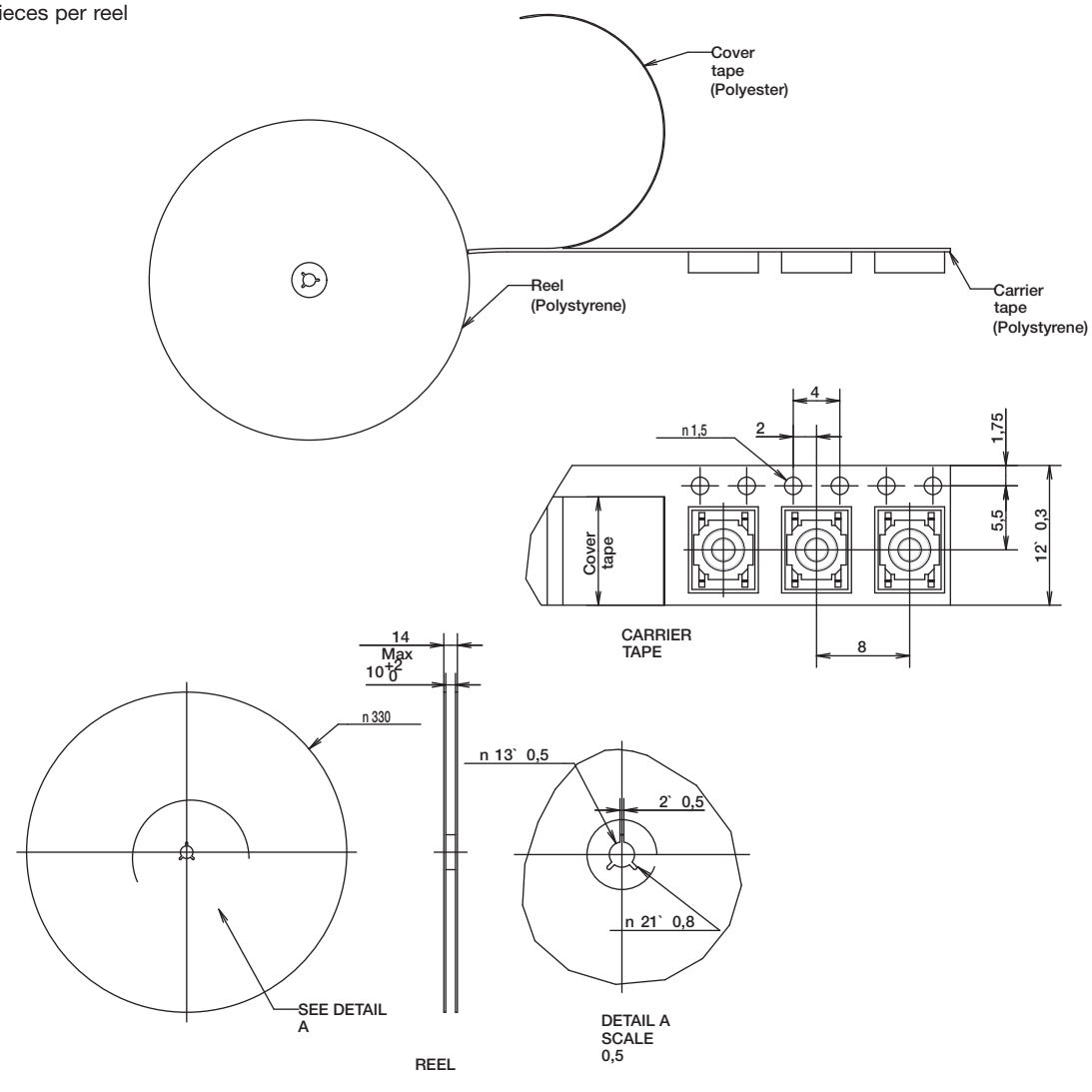


First Angle Projection

*Dimensions are shown: mm*
*Specifications and dimensions subject to change*

# PTS 530 Series
# Ultra Low Profile SMT Top Actuated

## *Features/Benefits*

- ***4.5 x 4.5 mm footprint***
- ***0.55 mm thickness***
- ***High number of cycles***
- ***Symbol line identification***

## *Typical Applications*

- ***MP3 accessories***
- ***Bluetooth headset***
- ***Remote controls***
- ***Garage door opener***

## Specifications

FUNCTION: momentary action
CONTACT ARRANGEMENT: 1 make contact = SPST N.O.
TERMINALS: Gullwing for SMT
TRAVEL: 0.2mm - 0.1 /+ 0.15mm

| Part Number | Operating Force (gf) | Operating Life (operations) |
|---|---|---|
| PTS530 GN055 SMTR LFS | 100 ± 30 | 1,000,000 |
| PTS530 GM055 SMTR LFS | 160 ± 30 | 1,000,000 |
| PTS530 GH055 SMTR LFS | 200 ± 30 | 200,000 |
| PTS530 GK055 SMTR LFS | 260 ± 30 | 200,000 |
| PTS530 GG065 SMTR LFS | 400 ± 70 | 300,000 |
| PTS530 GS065 SMTR LFS | 600 - 50/+100 | 150,000 |

## Electrical

MAXIMUM VOLTAGE: 12 VDC
MAXIMUM CURRENT DC: 50 mA
DIELECTRIC STRENGTH: 250 VA C (1mn)
CONTACT RESISTANCE: ≤ 100 mΩ
INSULATION RESISTANCE: ≥ 100 MΩ
BOUNCE TIME: ≤ 10 ms

## Environmental

OPERATING TEMPERATURE: -40˚C to 85˚C

## Process

SOLDERING: This component is suited to the following methods:
Infrared Reflow Soldering in accordance with IEC61760-1

## Packaging

Switches in reels of 7,000 pieces.
Dimensions of reels according to EIA 481B
External diameter 330 mm

**NOTE**: Specifications listed above are for switches with standard options.
For information on specific and custom switches, consult Customer Service Center.

## How To Order

Our easy build-a-switch concept allows you to mix and match options to create the switch you need. To order, select desired option from each category and place it in the appropriate box.

**For any part number different from those listed above, please consult your local representative.**

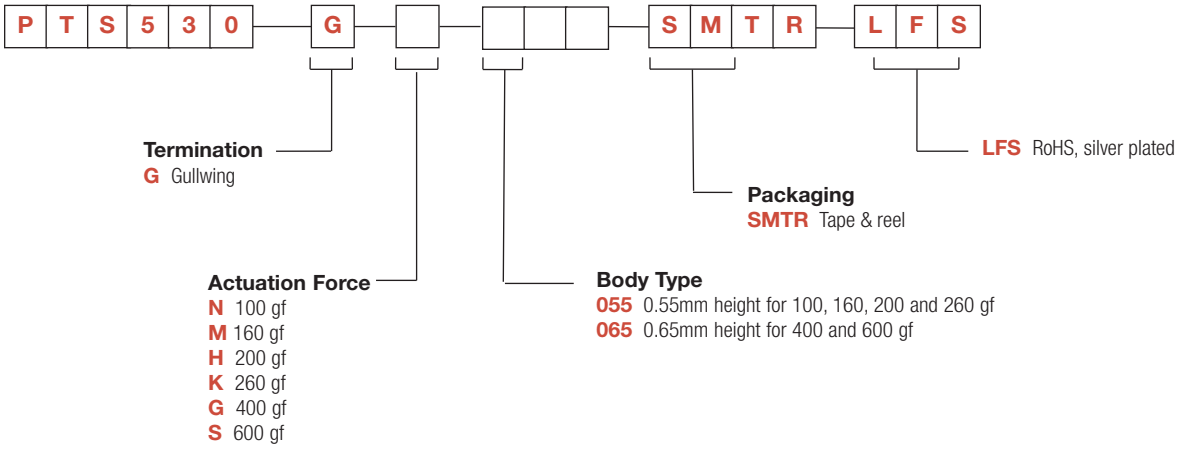

# PTS 530 Series
# Ultra Low Profile SMT Top Actuated



## TERMINATION

**G** GULLWING

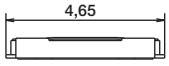


## BODY TYPE / ACTUATION FORCE

**055** 0,55 MM HEIGHT

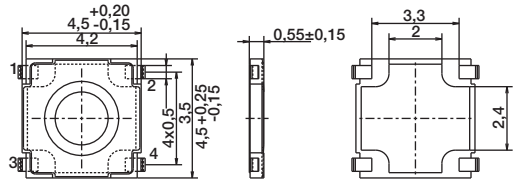


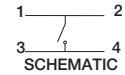


SCHEMATIC

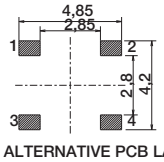


ALTERNATIVE PCB LAYOUT

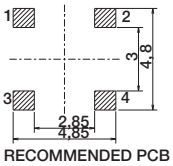


RECOMMENDED PCB LAYOUT

**065** 0,65 MM HEIGHT

| PART NUMBER | HEIGHT $^{+0.1}_{-0.05}$ |
|---|---|
| PTS 530 GS 065 SMTR LFS | 0.72 |
| PTS 530 GG 065 SMTR LFS | 0.68 |

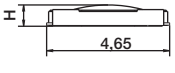


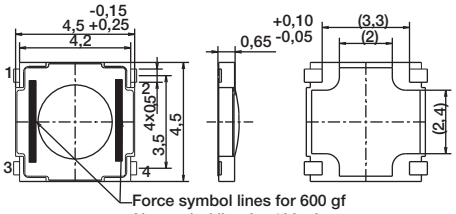


Force symbol lines for 600 gf
No symbol line for 400 gf

Restriction in operation

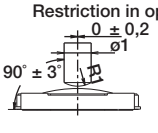


**Actuation force identification lines:**

| | |
|---|---|
| N: 100 gf | 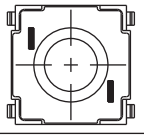 |
| M: 160 gf | No Lines |
| H: 200 gf | 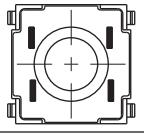 |
| K: 260 gf | 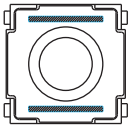 |

| | |
|---|---|
| G: 400 gf | No Lines |
| S: 600 gf | 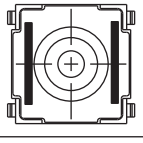 |

## TAPE & REEL

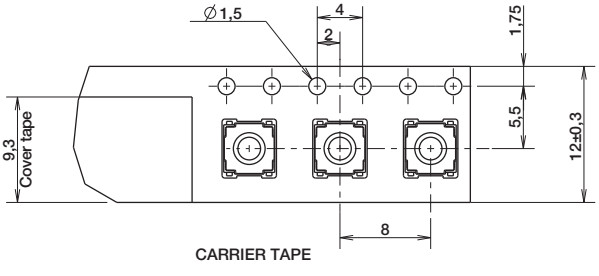


CARRIER TAPE

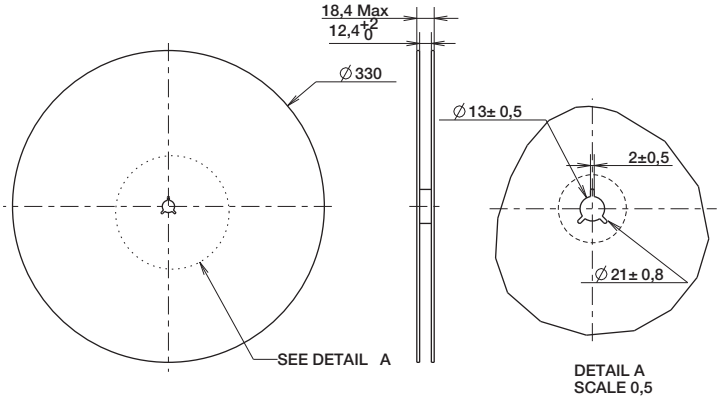


DETAIL A
SCALE 0,5

REEL

*Dimensions are shown: mm*
*Specifications and dimensions subject to change*

# PTS 540 Series
# Ultra Low Profile SMT Top Actuated

## *Features/Benefits*

- ***3.7 x 3.7 mm footprint***
- ***0.35 mm thickness***
- ***High number of cycles***

## *Typical Applications*

- ***MP3 accessories***
- ***Bluetooth headset***
- ***Remote controls***

## Specifications

FUNCTION: momentary action
CONTACT ARRANGEMENT: 1 make contact = SPST N.O.
TERMINALS: J type for SMT
TRAVEL: 0.15 mm ± 0.1 mm

## Mechanical

| Part Number | Operating Force (gf) | Operating Life (operations) |
|---|---|---|
| PTS540 JM035 SMTR LFS | 160 ± 50 | 500,000 |
| PTS540 JK035 SMTR LFS | 230 ± 50 | 300,000 |

## Packaging

Switches in reels of 10,000 pieces.
Dimensions of reels according to EIA 481B
External diameter 330 mm

## Electrical

| | |
|---|---|
| MAXIMUM VOLTAGE: | 12 VDC |
| MAXIMUM CURRENT DC: | 50 mA |
| DIELECTRIC STRENGTH: | 250 VA C (1mn) |
| CONTACT RESISTANCE: | ≤ 100 mΩ |
| INSULATION RESISTANCE: | ≥ 100 MΩ |
| BOUNCE TIME: | ≤ 10 ms |

## Environmental

OPERATING TEMPERATURE: -30˚C to 85˚C

## Process

SOLDERING: This component is suited to the following methods:
Infrared Reflow Soldering in accordance with IEC61760-1

**NOTE**: Specifications listed above are for switches with standard options.
For information on specific and custom switches, consult Customer Service Center.

## How To Order

Our easy build-a-switch concept allows you to mix and match options to create the switch you need. To order, select desired option from each category and place it in the appropriate box.

**For any part number different from those listed above, please consult your local representative.**

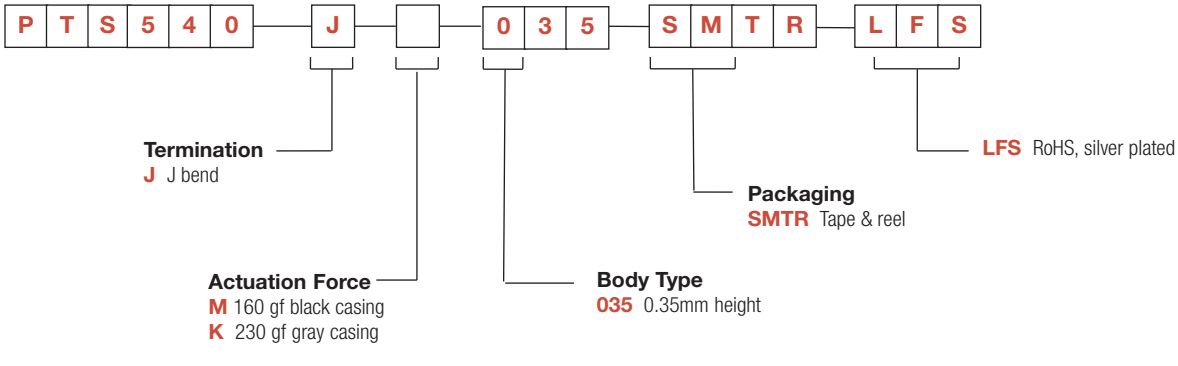

# PTS 540 Series
# Ultra Low Profile SMT Top Actuated

## PTS 540

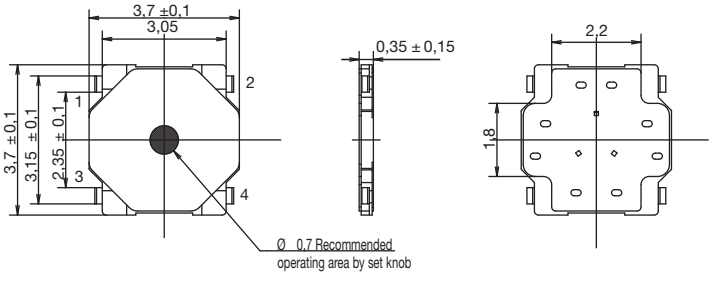


RECOMMENDED PCB

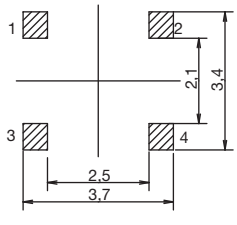


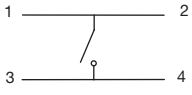


SCHEMATIC

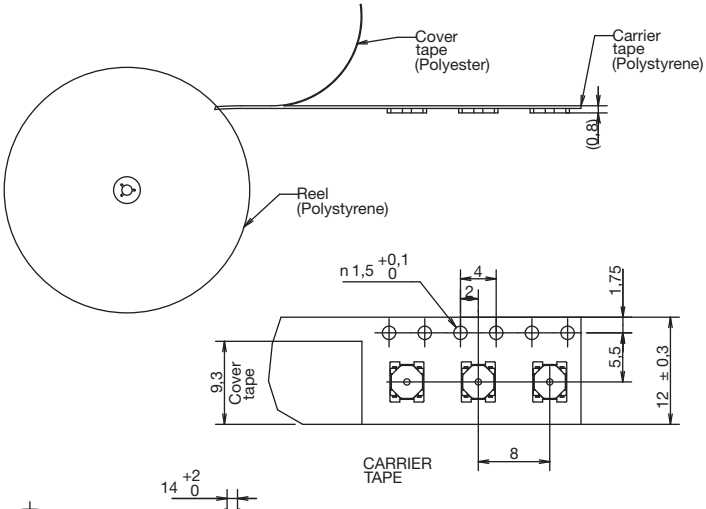


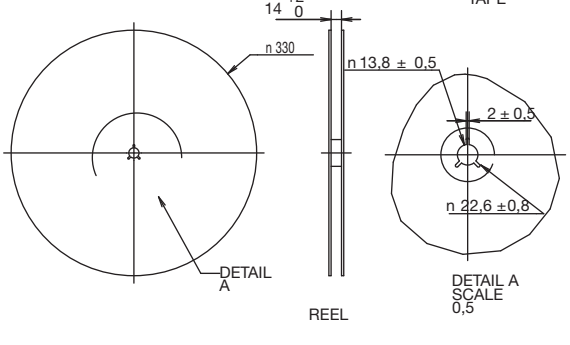


*Dimensions are shown: mm*
*Specifications and dimensions subject to change*

# PTS 810 Series
# Microminiature SMT Top Actuated

## *Features/Benefits*

- ***4.2 x 3.2 mm footprint***
- ***2.5 mm thickness***
- ***High number of cycles***
- ***Color coded actuators***

## *Typical Applications*

- ***Control panels***
- ***Nomad devices***
- ***Remote controls***
- ***Keyless entry system***

## Specifications

FUNCTION: momentary action
CONTACT ARRANGEMENT: 1 make contact = SPST N.O.
TERMINALS: J type for SMT
TRAVEL: 160 & 260 gf: 0.15mm ± 0.1mm
400 & 600 gf: 0.20mm ± 0.1mm

| | Operating Force (gf) | Operating Life (operations) |
|---|---|---|
| PTS810 SJM 250 SMTR LFS | 160 ± 50 | 150,000 |
| PTS810 SJK 250 SMTR LFS | 260 ± 70 | 50,000 |
| PTS810 SJG 250 SMTR LFS | 400 ± 100 | 100,000 |
| PTS810 SJS 250 SMTR LFS | 600 ± 150 | 150,000 |

## Packaging

Switches in reels of 2,900 pieces.
Dimensions of reels according to EIA 481B
External diameter 330 mm

## Electrical

MAXIMUM VOLTAGE: 16 VDC
MAXIMUM CURRENT DC: 50 mA
DIELECTRIC STRENGTH: 250 VA C (1mn)
CONTACT RESISTANCE: ≤ 500 mΩ
INSULATION RESISTANCE: ≥ 100 MΩ
BOUNCE TIME: ≤ 10 ms

## Environmental

OPERATING TEMPERATURE: -40˚C to 85˚C

## Process

SOLDERING: This component is suited to the following methods:
Infrared Reflow Soldering in accordance with IEC61760-1

**NOTE**: Specifications listed above are for switches with standard options.
For information on specific and custom switches, consult Customer Service Center.

## How To Order

Our easy build-a-switch concept allows you to mix and match options to create the switch you need. To order, select desired option from each category and place it in the appropriate box.

**For any part number different from those listed above, please consult your local representative.**

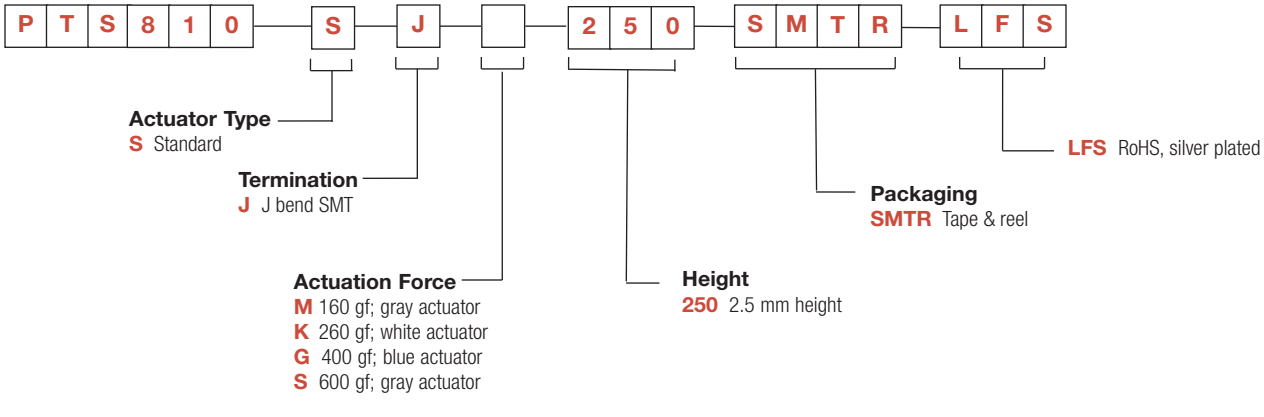

# PTS 810 Series
# Microminiature SMT Top Actuated

## PTS810

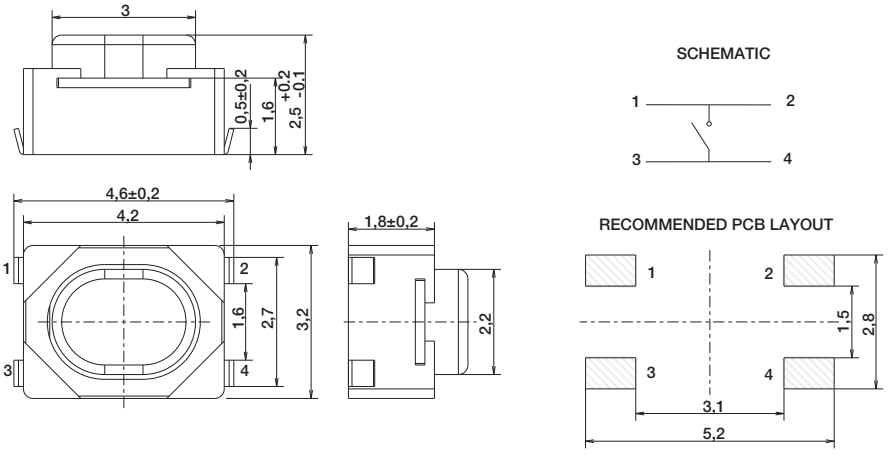


## TAPE & REEL

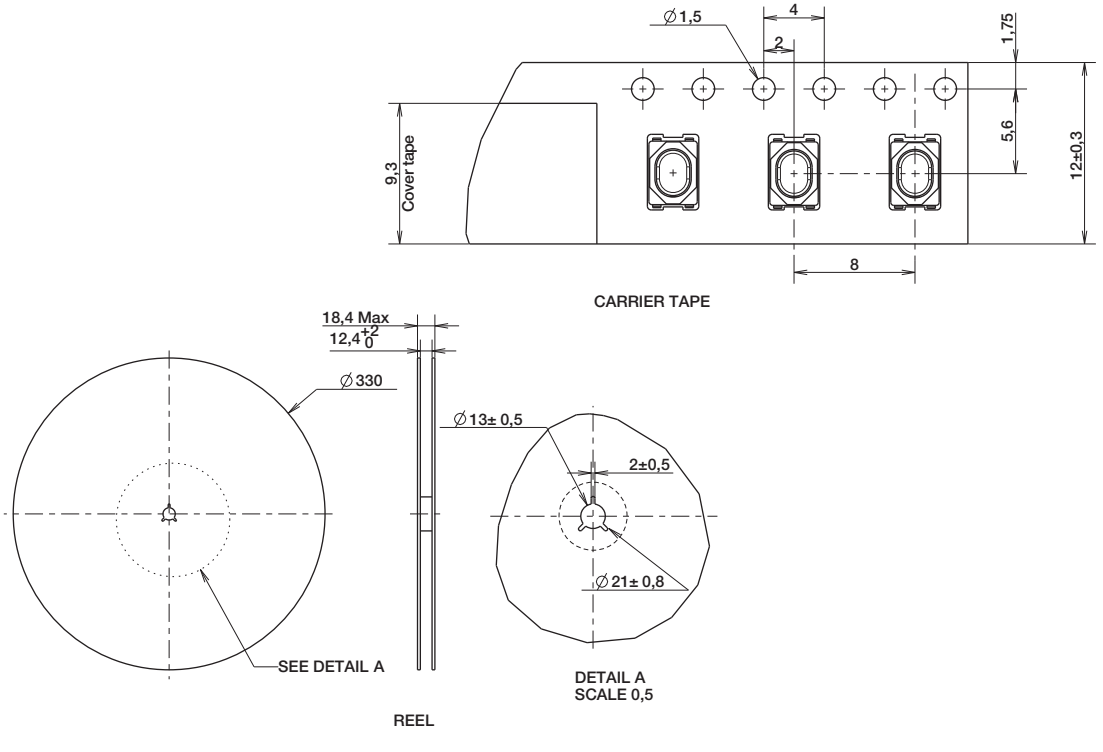

# PTS 820 Series
# Microminiature SMT Top Actuated

## *Features/Benefits*

- ***3.9 x 2.9 mm footprint***
- ***Three different heights***
- ***High number of cycles***
- ***Reduced footprint***

## *Typical Applications*

- ***Control panels***
- ***Nomad devices***
- ***Remote controls***
- ***Keyless entry system***

## Specifications

FUNCTION: momentary action
CONTACT ARRANGEMENT: 1 make contact = SPST N.O.
TERMINALS: J type for SMT
TRAVEL: 0.2mm + 0.1mm / -0.05 mm

| | Operating Force (gf) | Life Cycles | Height mm | Pegs |
|---|---|---|---|---|
| PTS820 J25M SMTR LFS | 160 ± 50 | 200,000 | 2.5 | No |
| PTS820 J25K SMTR LFS | 250 ± 50 | 100,000 | 2.5 | No |
| PTS820 J25MP SMTR LFS | 160 ± 50 | 200,000 | 2.5 | Yes |
| PTS820 J25KP SMTR LFS | 250 ± 50 | 100,000 | 2.5 | Yes |
| PTS820 J20M SMTR LFS | 160 ± 50 | 200,000 | 2.0 | No |
| PTS820 J20K SMTR LFS | 250 ± 50 | 100,000 | 2.0 | No |
| PTS820 J20MP SMTR LFS | 160 ± 50 | 200,000 | 2.0 | Yes |
| PTS820 J20KP SMTR LFS | 250 ± 50 | 100,000 | 2.0 | Yes |
| PTS820 J15M SMTR LFS | 160 ± 50 | 200,000 | 1.5 | No |
| PTS820 J15K SMTR LFS | 250 ± 50 | 100,000 | 1.5 | No |
| PTS820 J15MP SMTR LFS | 160 ± 50 | 200,000 | 1.5 | Yes |
| PTS820 J15KP SMTR LFS | 250 ± 50 | 100,000 | 1.5 | Yes |

## Packaging

Switches in reels of 2,500 pieces for 1.5 and 2.0 mm height
Switches in reels of 2,300 pieces for 2.5 mm height
Dimensions of reels according to EIA 481B
External diameter 330 mm

## Electrical

| | |
|---|---|
| MAXIMUM VOLTAGE: | 12 VDC |
| MAXIMUM CURRENT DC: | 50 mA |
| DIELECTRIC STRENGTH: | 100 VA C (1mn) |
| CONTACT RESISTANCE: | ≤ 100 mΩ |
| INSULATION RESISTANCE: | ≥ 100 MΩ |
| BOUNCE TIME: | ≤ 10 ms |

## Environmental

OPERATING TEMPERATURE: -40˚C to 85˚C

## Process

SOLDERING: This component is suited to the following methods:
Infrared Reflow Soldering in accordance with IEC61760-1

**NOTE**: Specifications listed above are for switches with standard options.
For information on specific and custom switches, consult Customer Service Center.

## How To Order

Our easy build-a-switch concept allows you to mix and match options to create the switch you need. To order, select desired option from each category and place it in the appropriate box.

**For any part number different from those listed above, please consult your local representative.**

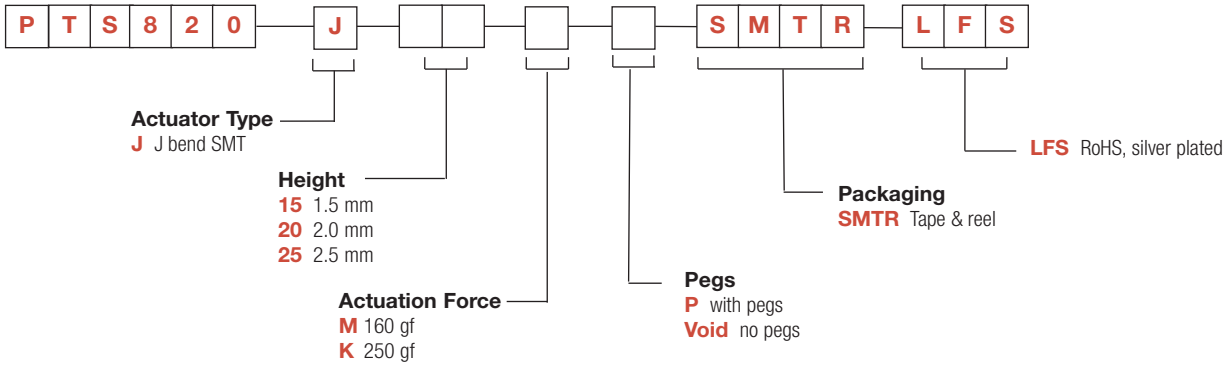

# PTS 820 Series
# Microminiature SMT Top Actuated

## 2.5 & 2.0 mm height (H) - version shown here with pegs

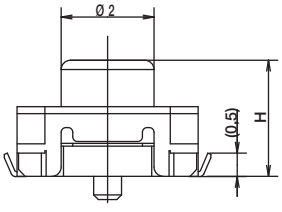


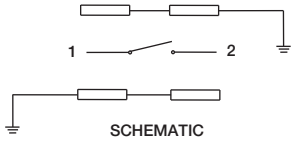


SCHEMATIC

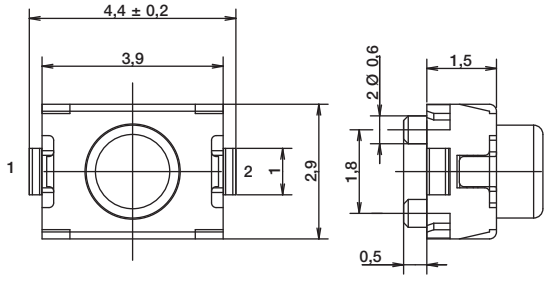


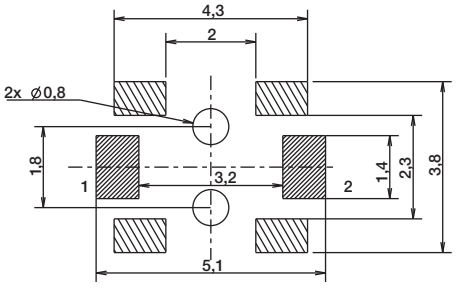


RECOMMENDED PCB LAYOUT

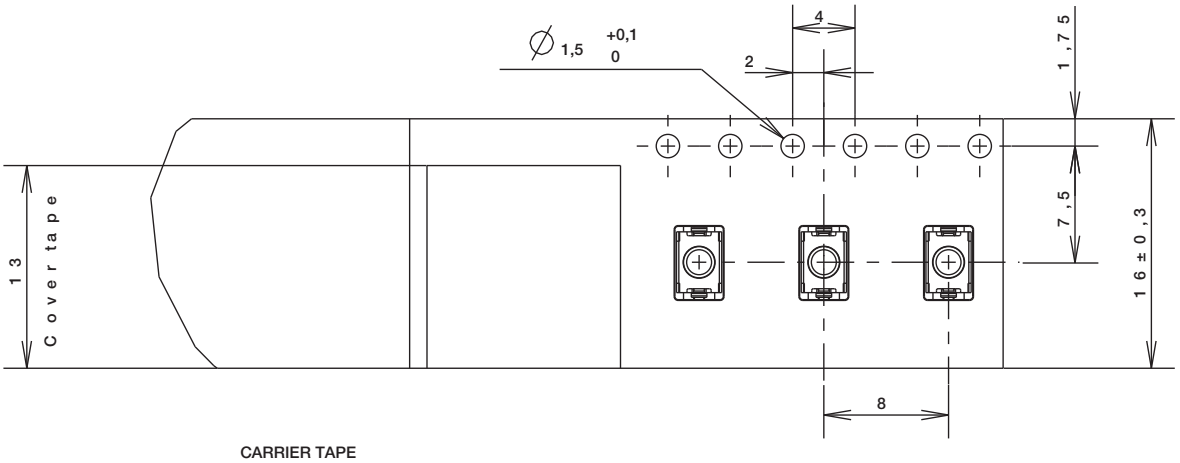


CARRIER TAPE

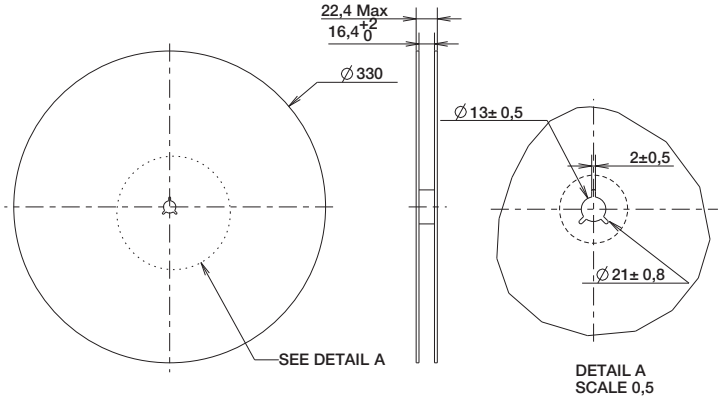


DETAIL A
SCALE 0,5

REEL

## 1.5 mm height (H) - version shown here with pegs



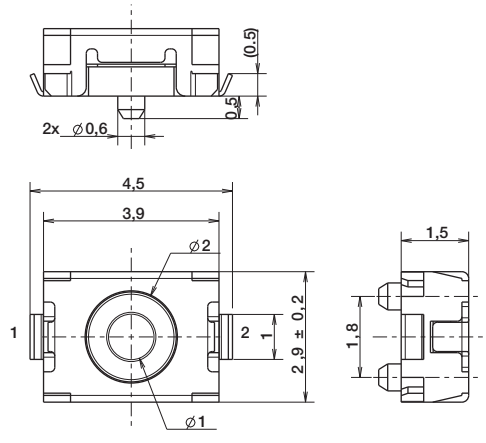


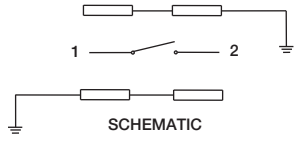


SCHEMATIC

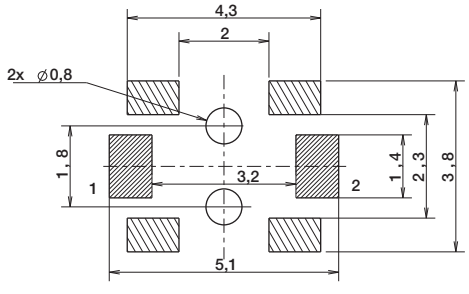


RECOMMENDED PCB LAYOUT

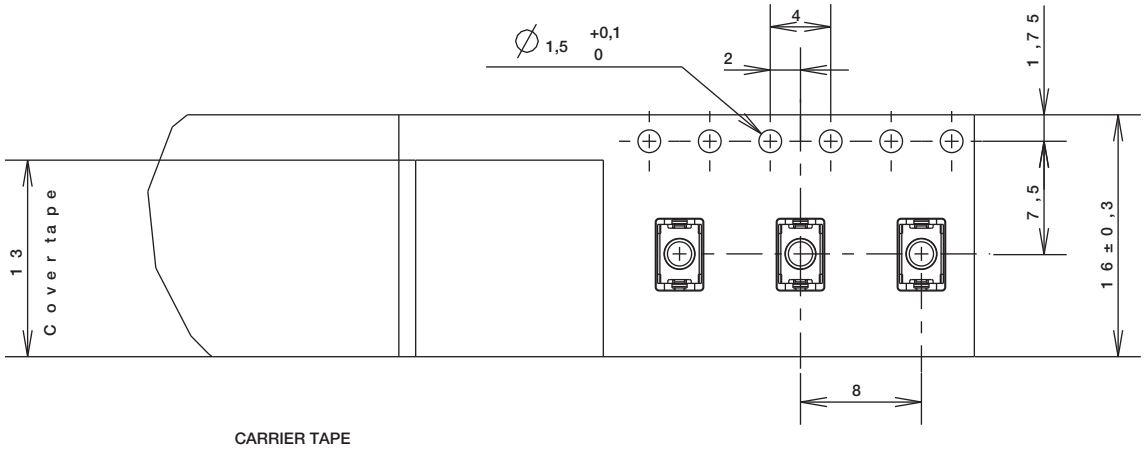


CARRIER TAPE

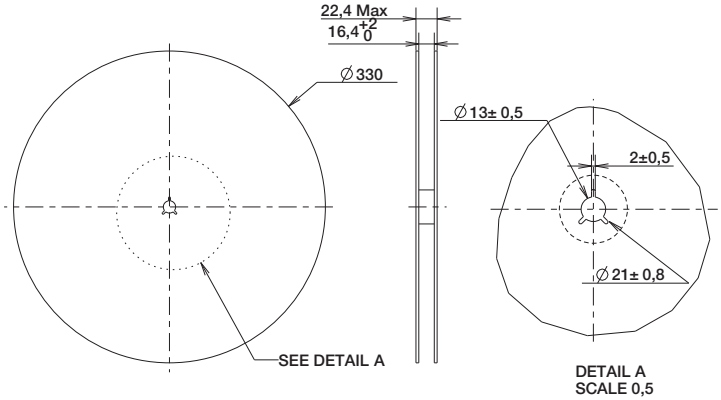


DETAIL A
SCALE 0,5

REEL

# PTS 830 Series
# Microminiature SMT Top Actuated

### *Features/Benefits*

- ***3.5 x 2.6 mm footprint***
- ***High number of cycles***
- ***Optional ground pin***

### *Typical Applications*

- ***Wearable electronics***
- ***Nomad devices***
- ***Remote controls***
- ***Keyless entry system***



## Specifications

FUNCTION: momentary action
CONTACT ARRANGEMENT: 1 make contact = SPST N.O.
TERMINALS: G type for SMT
TRAVEL: 0.15 mm + 0.1 mm

| | Operating Force (gf) | Life Cycles | Ground Pin |
|---|---|---|---|
| PTS830 GM140 SMTR LFS | 160 ± 50 | 500,000 | No |
| PTS830 GG140 SMTR LFS | 450 ± 80 | 200,000 | No |
| PTS830 GM140G SMTR LFS | 160 ± 50 | 500,000 | Yes |
| PTS830 GG140G SMTR LFS | 450 ± 80 | 200,000 | Yes |

## Packaging

Switches in reels of 9,500 pieces
Dimensions of reels according to EIA 481B
External diameter 330 mm

## Electrical

| | |
|---|---|
| MAXIMUM VOLTAGE: | 12 VDC |
| MAXIMUM CURRENT DC: | 50 mA |
| DIELECTRIC STRENGTH: | 100 VA C (1mn) |
| CONTACT RESISTANCE: | ≤ 100 mΩ |
| INSULATION RESISTANCE: | ≥ 100 MΩ |
| BOUNCE TIME: | ≤ 10 ms |

## Environmental

OPERATING TEMPERATURE: -40˚C to 85˚C

## Process

SOLDERING: This component is suited to the following methods:
Infrared Reflow Soldering in accordance with IEC61760-1

**NOTE**: Specifications listed above are for switches with standard options.
For information on specific and custom switches, consult Customer Service Center.

## How To Order

Our easy build-a-switch concept allows you to mix and match options to create the switch you need. To order, select desired option from each category and place it in the appropriate box.

**For any part number different from those listed above, please consult your local representative.**

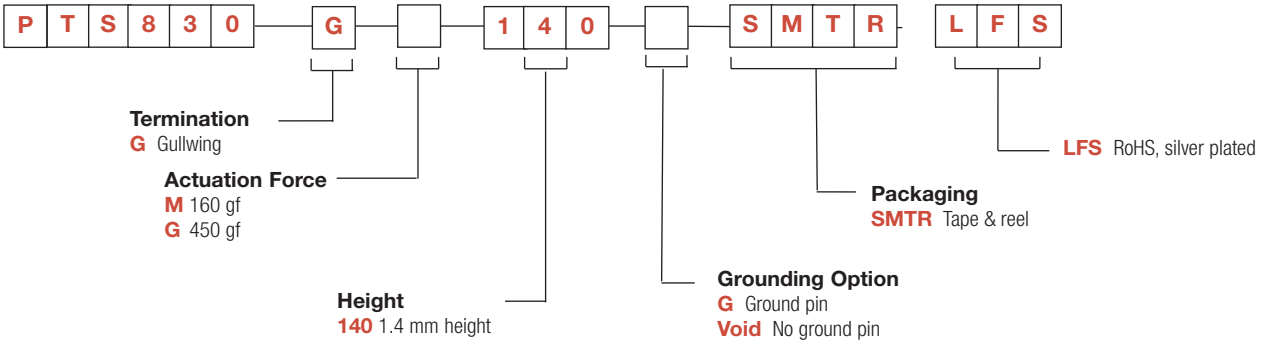

## PTS830 GX 140 SMTR LFS

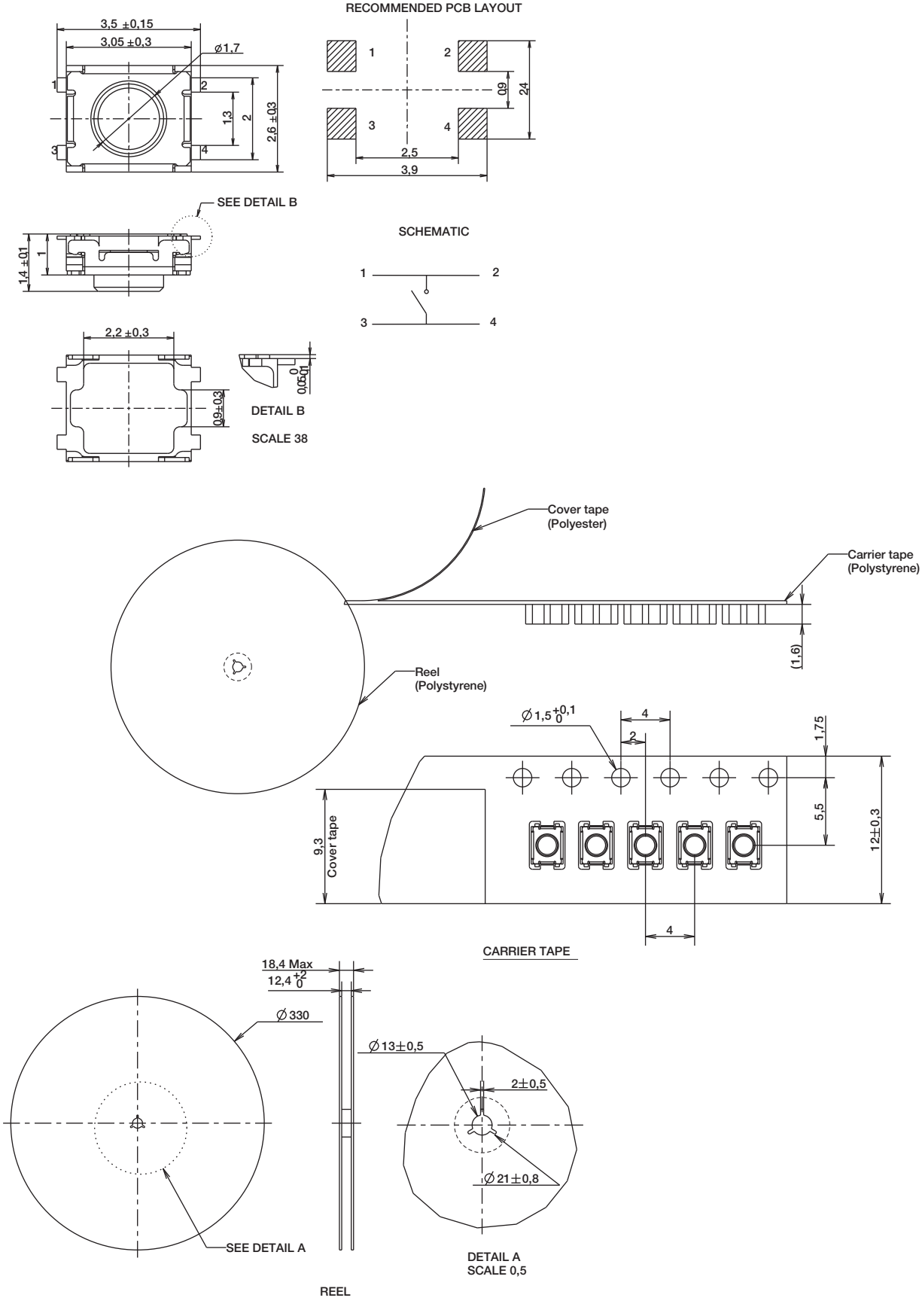

# PTS 830 Series
# Microminiature SMT Top Actuated

## PTS830 GX 140 G SMTR LFS

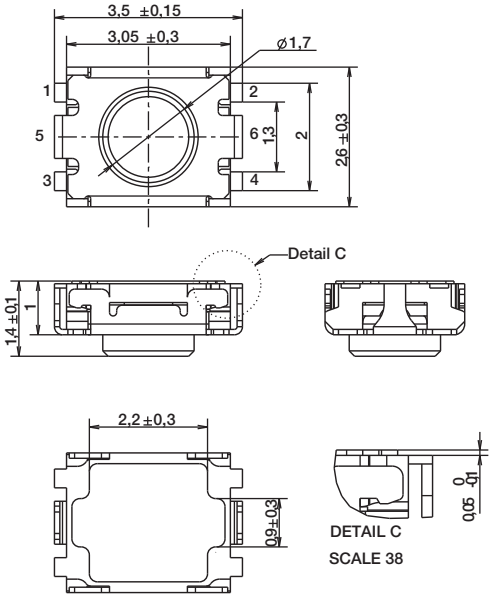


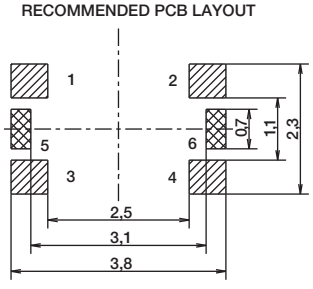


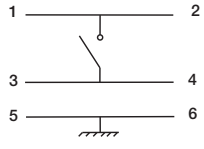


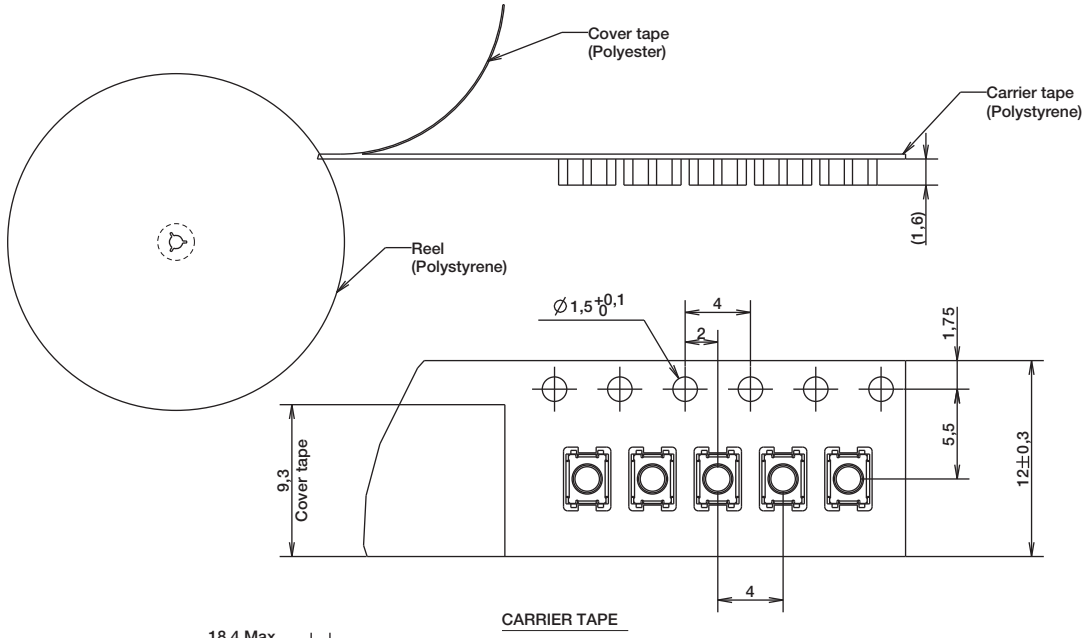


CARRIER TAPE

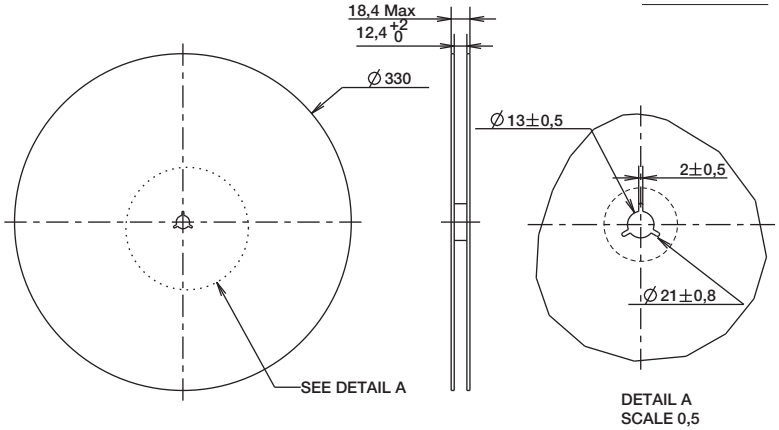


DETAIL A
SCALE 0,5

REEL

*Dimensions are shown: mm*
*Specifications and dimensions subject to change*

# PTS 840 Series
# Microminiature SMT Side Actuated

## Features/Benefits

- *3.5 x 3.55 mm footprint*
- *Front PIP leads option for strong shear resistance*
- *ESD pin option*
- *Reduced footprint*

## Typical Applications

- *Nomad devices*
- *Remote controls*
- *Personal health diagnostics*
- *Consumer electronics*



## Specifications

FUNCTION: momentary action
CONTACT ARRANGEMENT: 1 make contact = SPST N.O.
TERMINALS: G and front PIP types for SMT
TRAVEL: 0.2mm + 0.2mm / -0.1 mm
LIFE: 100,000 cycles

| Type | Operating Force (gf) | SMT Leads | Pegs |
|---|---|---|---|
| **Without ground pin** | | | |
| PTS840 GM SMTR LFS | 160 -40/+70 | G leads | No |
| PTS840 GK SMTR LFS | 220 -70/+80 | G leads | No |
| PTS840 PM SMTR LFS | 160 -40/+70 | P leads | No |
| PTS840 PK SMTR LFS | 220 -70/+80 | P leads | No |
| PTS840 GMP SMTR LFS | 160 -40/+70 | G leads | Yes |
| PTS840 GKP SMTR LFS | 220 -70/+80 | G leads | Yes |
| **With ground pin** | | | |
| PTS840 ESDGM SMTR LFS | 160 -40/+70 | G leads | No |
| PTS840 ESDGK SMTR LFS | 220 -70/+80 | G leads | No |
| PTS840 ESDPM SMTR LFS | 160 -40/+70 | P leads | No |
| PTS840 ESDPK SMTR LFS | 220 -70/+80 | P leads | No |
| PTS840 ESDGMP SMTR LFS | 160 -40/+70 | G leads | Yes |
| PTS840 ESDGKP SMTR LFS | 220 -70/+80 | G leads | Yes |

## Electrical

| | |
|---|---|
| MAXIMUM VOLTAGE: | 12 VDC |
| MAXIMUM CURRENT DC: | 50 mA |
| DIELECTRIC STRENGTH: | 250 VA C (1mn) |
| CONTACT RESISTANCE: | ≤ 500 mΩ |
| INSULATION RESISTANCE: | ≥ 100 MΩ |
| BOUNCE TIME: | ≤ 10 ms |

## Environmental

OPERATING TEMPERATURE: -40˚C to 85˚C

## Process

SOLDERING: This component is suited to the following methods:
Infrared Reflow Soldering in accordance with IEC61760-1

## Packaging

In reels of 3,500 pieces
Dimensions of reels according to EIA 481B
External diameter 330 mm

**NOTE**: Specifications listed above are for switches with standard options.
For information on specific and custom switches, consult Customer Service Center.

## How To Order

Our easy build-a-switch concept allows you to mix and match options to create the switch you need. To order, select desired option from each category and place it in the appropriate box.

**For any part number different from those listed above, please consult your local representative.**

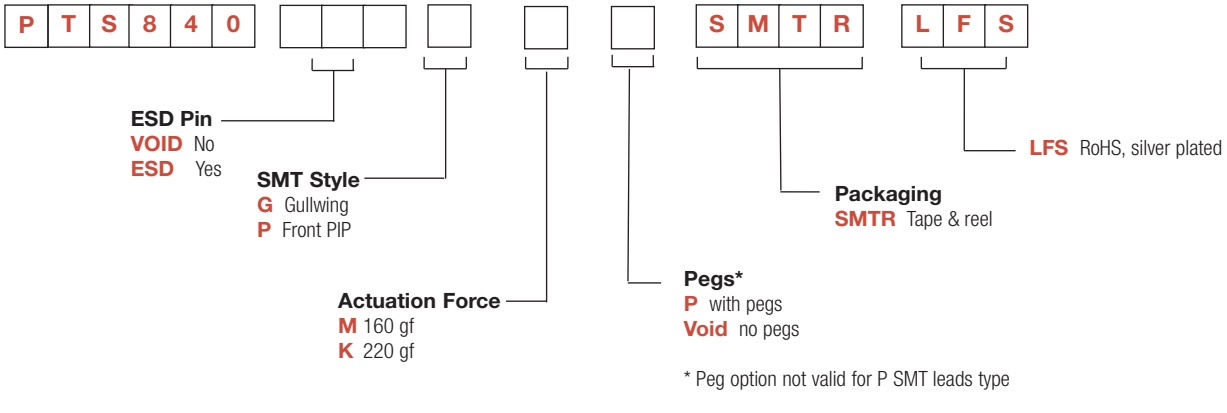


Design Recommendations

- "P" leads are recommended for applications where shear resistance is of importance
- When a precise alignment between application button and the switch is requested, version with pegs are the right choice to limit the possible floating of the switch during solderability.

*Dimensions are shown: mm*
*Specifications and dimensions subject to change*

## Standard G SMT Leads with ESD and Peg options

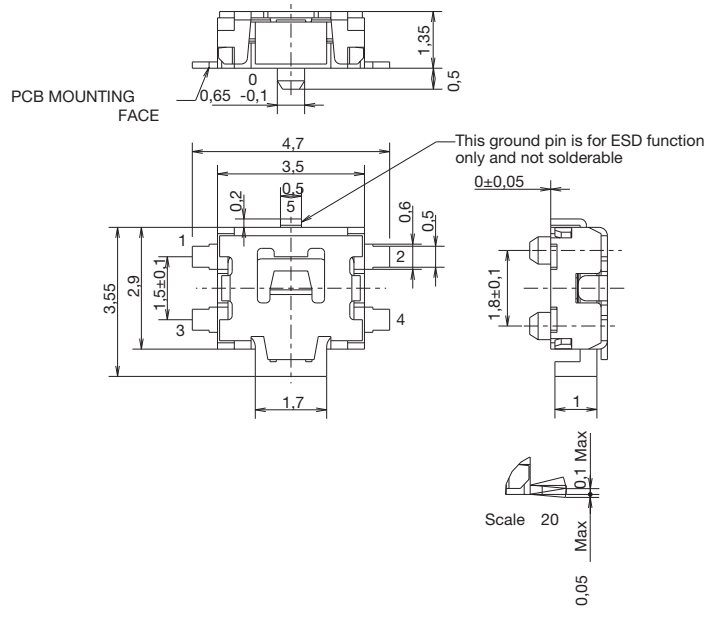


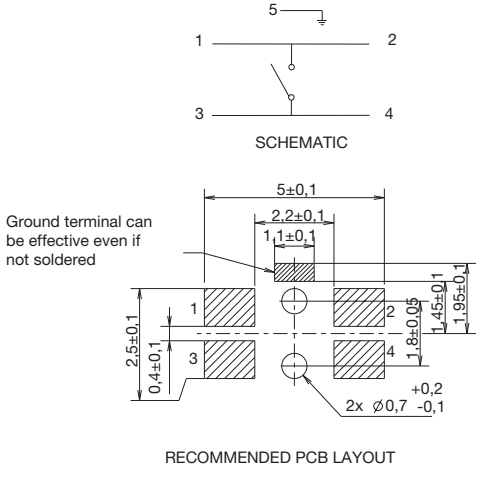


## P SMT Leads with ESD option

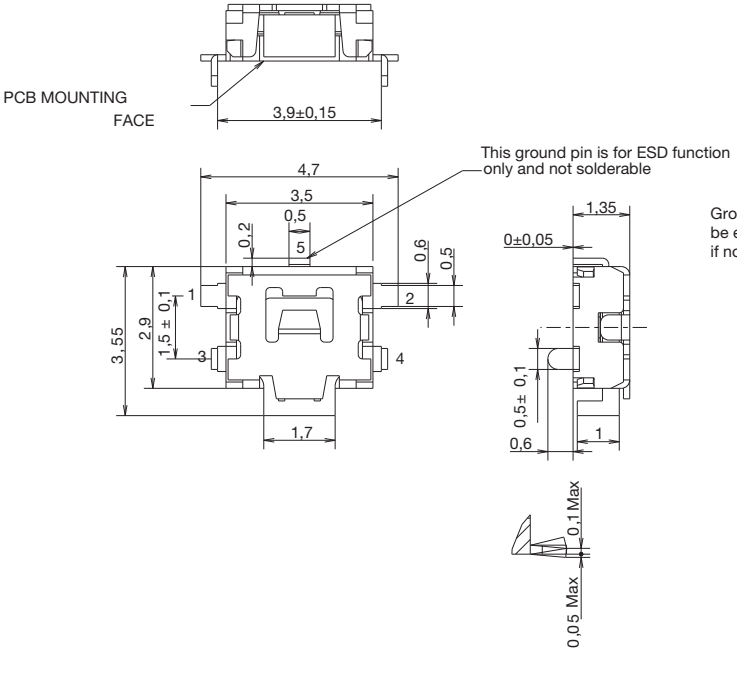


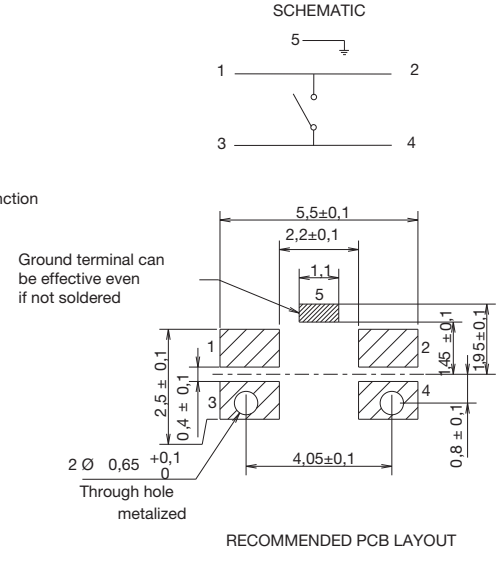

# PTS 840 Series
# Microminiature SMT Side Actuated

## TAPE & REEL

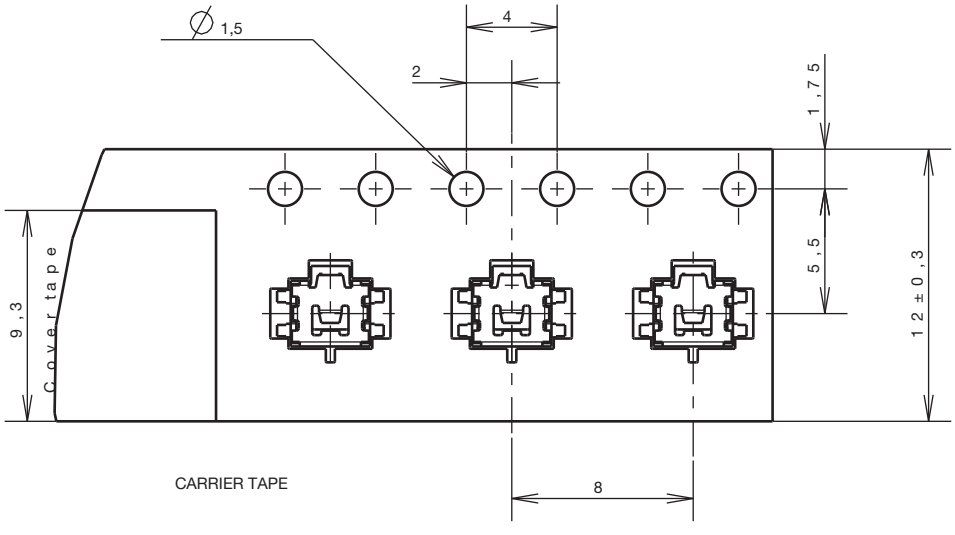


CARRIER TAPE

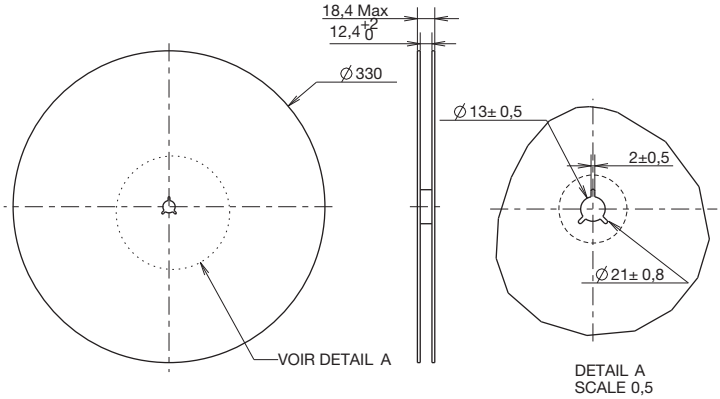


DETAIL A
SCALE 0,5

REEL

# KSR Series
# Subminiature Tact Switch for SMT

## *Features/Benefits*

- ***4 actuation forces***
- ***G terminations***
- ***N.O. and N.C.***
- ***Detect type available***
- ***Rubber actuator***
- ***IP50 sealed***
- ***RoHS compliant and compatible***

## *Typical Applications*

- ***Automotive***
- ***Medical equipment***
- ***Industrial electronics***
- ***Smart meters***

## Specification

FUNCTION: momentary action
CONTACT ARRANGEMENT: Normally Open
TERMINALS: Gullwing type for SMT

## Mechanical

| Type | Operating force Newtons (grams) | Operating life (operations) | Travel (mm) |
|---|---|---|---|
| KSR211G LFS / KSR213G LFG | 1,5 < 1,85 (185) < 2,2 | 100,000 | 0,25 ± 0,15 |
| KSR221G LFS / KSR223G LFG | 1,9 < 2,25 (225) < 2,6 | 100,000 | 0,3 ± 0,15 |
| KSR231G LFS /KSR233G LFG | 2,25 < 3,00 (300)< 3,75 | 100,000 | 0,35 ± 0,15 |
| KSR251G LFS / KSR253G LFG | 3,4 < 4,50 (450) < 5,6 | 100,000 | 0,5 ± 0,15 |
| KSR221G NC LFS | 1,5 < 2,25 (225) < 3 | 30,000 | 0,3 ± 0,15 |
| KSR223G NC LFG | 1,5 < 2 (200) < 2,5 | 30,000 | 0,3 ± 0,15 |

Overload: 20 Newtons
Detect switch versions are available. Please see Detect chapter KSR2D/M series.

## Packaging

Switches are delivered on continuous tape, in reels of 2,500 pieces.

## Electrical

| | Silver | Gold |
|---|---|---|
| MAXIMUM POWER: | 1 VA | 0.2 VA |
| MAXIMUM VOLTAGE: | 32 VDC | 32 VDC |
| MINIMUM VOLTAGE: | 20 mV | 20 mV |
| MAXIMUM CURRENT DC: | 50 mA | 10 mA |
| MINIMUM CURRENT DC: | 1 mA | 1 mA |

CONTACT RESISTANCE: ≤ 100 mΩ
INSULATION RESISTANCE: (100 V): 1G Ω (between terminals)
BOUNCE TIME: 1 ms max.

## Environmental

| | Silver | Gold |
|---|---|---|
| OPERATING TEMPERATURE: | -40˚C to 85˚C | -40˚C to 125˚C |
| STORAGE TEMPERATURE: | -55˚C to 85˚C | -55˚C to 125˚C |

## Process

SOLDERING: Compatible with lead free reflow soldering process.

**NOTE**: Specifications listed above are for switches with standard options.
For information on specific and custom switches, consult Customer Service Center.

## How To Order

Our easy build-a-switch concept allows you to mix and match options to create the switch you need. To order, select desired option from each category and place it in the appropriate box.

**However, please note that all the combinations of these options are not feasible.**
**For any part number different from those listed above, please consult your local representative.**

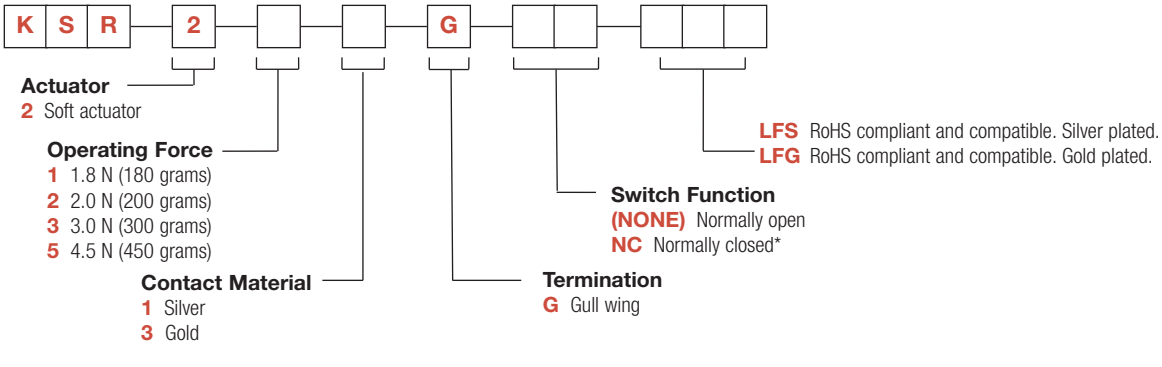


*Available on KSR223G only.

*Dimensions are shown: mm*
*Specifications and dimensions subject to change*

## KSR

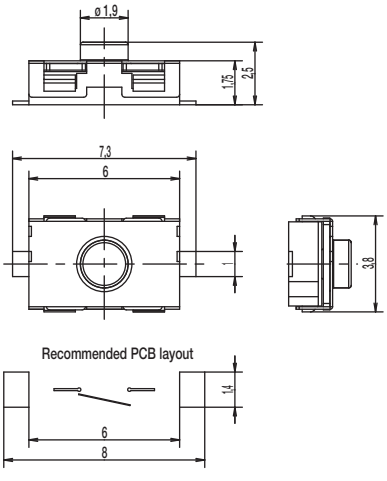


## TAPE & REEL

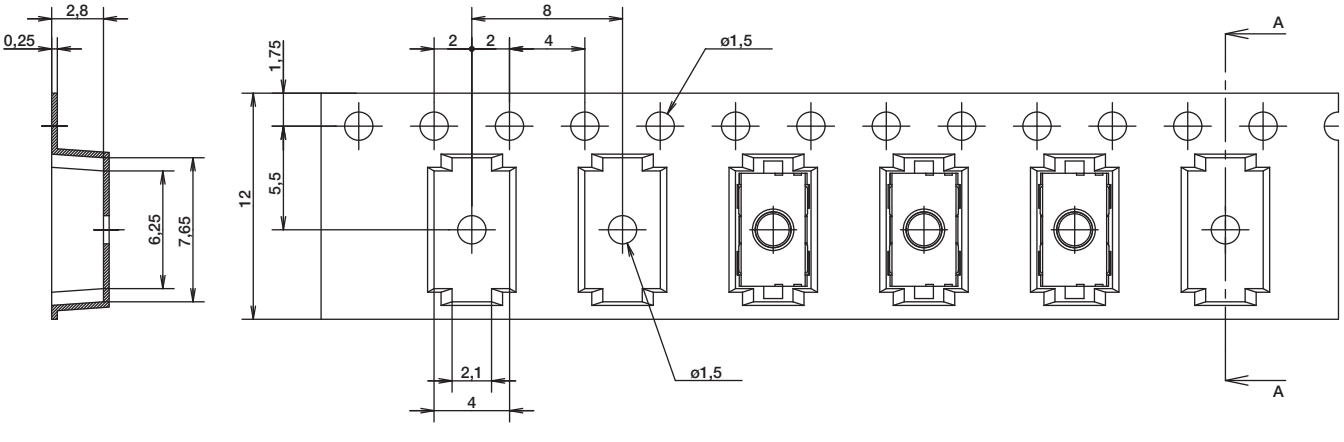


DIRECTION OF FEED

First Angle Projection

*Dimensions are shown: mm*
*Specifications and dimensions subject to change*

# KSR Long Life-200,000 cycles-Gold and Silver Series Subminiature Tact Switch for SMT

## *Features/Benefits*

- ***4 actuation forces***
- ***G terminations***
- ***N.O.***
- ***Detect type available***
- ***Rubber actuator***
- ***IP50 sealed***
- ***RoHS compliant and compatible***

## *Typical Applications*

- ***Automotive***
- ***Medical equipment***
- ***Industrial electronics***

## Specification

FUNCTION: momentary action
CONTACT ARRANGEMENT: Normally Open
TERMINALS: Gullwing type for SMT

## Mechanical

| Type | Operating force(Fa) Newtons (grams) | Operating life (operations) | Travel (mm) |
|---|---|---|---|
| Silver versions | | | |
| KSR212G LFS | 1,5 < 1,85 (185) < 2,2 | 200,000 | 0,25 ± 0,15 |
| KSR222G LFS | 1,9 < 2,25 (225) < 2,6 | 200,000 | 0,3 ± 0,15 |
| KSR232G LFS | 2,25 < 3,00 (300)< 3,75 | 200,000 | 0,35 ± 0,15 |
| KSR252G LFS | 3,4 < 4,50 (450) < 5,6 | 200,000 | 0,5 ± 0,15 |
| Gold versions | | | |
| KSR214G LFS | 1,5 < 1,85 (185) < 2,2 | 200,000 | 0,25 ± 0,15 |
| KSR224G LFS | 1,9 < 2,25 (225) < 2,6 | 200,000 | 0,3 ± 0,15 |
| KSR234G LFS | 2,25 < 3,00 (300)< 3,75 | 200,000 | 0,35 ± 0,15 |
| KSR254G LFS | 3,4 < 4,50 (450) < 5,6 | 200,000 | 0,5 ± 0,15 |

OVERLOAD: 20 Newtons

## Packaging

Switches are delivered on continuous tape, in reels of 2,500 pieces.

## Electrical

| | Silver | Gold |
|---|---|---|
| MAXIMUM POWER: | 1 VA | 0.2 VA |
| MAXIMUM VOLTAGE: | 32 V dc | 32 V dc |
| MINIMUM VOLTAGE: | 20 m Vdc | 20 m Vdc |
| MAXIMUM CURRENT DC: | 50 mA | 10 mA |
| MINIMUM CURRENT DC: | 1 mA | 1 mA |

CONTACT RESISTANCE: ≤ 100 m Ω
INSULATION RESISTANCE (100 V): 1 G Ω (between terminals)
BOUNCE TIME: 1 ms max

## Environmental

| | Silver | Gold |
|---|---|---|
| OPERATING TEMPERATURE: | -40˚C to 85˚C | -40˚C to 125˚C |
| STORAGE TEMPERATURE: | -55˚C to 85˚C | -55˚C to 125˚C |

## Process

SOLDERING: Compatible with lead free reflow soldering process.

**NOTE**: Specifications listed above are for switches with standard options.
For information on specific and custom switches, consult Customer Service Center.

## How To Order

Our easy build-a-switch concept allows you to mix and match options to create the switch you need. To order, select desired option from each category and place it in the appropriate box.

**However, please note that all the combinations of these options are not feasible.**
**For any part number different from those listed above, please consult your local representative.**

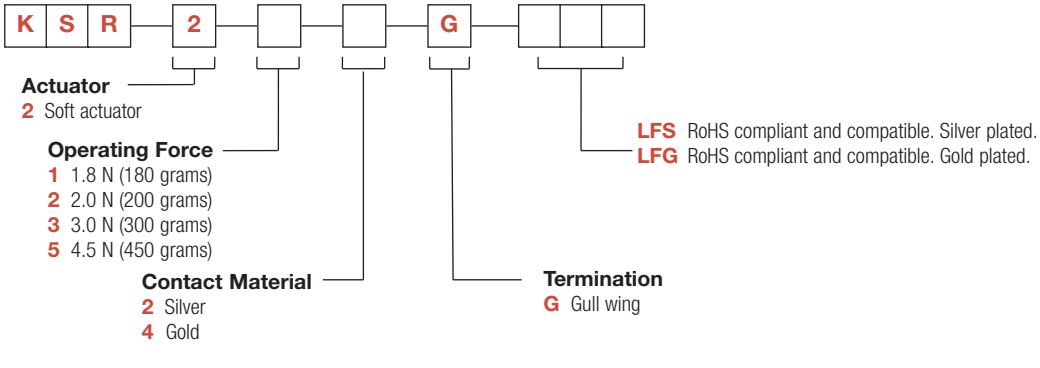


*Dimensions are shown: mm*
*Specifications and dimensions subject to change*