HSF RoHS

FILE NO :E362810

SPECIFICATIONS

Rated Current:2.0AMP

Contact Resistance:20mΩ Max

Withstand Voltage:400V AC/DC

Insulation Resistance:800MΩ Min

Operation Temperature:-40°c to +105°c

Contact Material:Brass

Contact Plating:Au or Sn Over Ni

Insulator Material:Polyester(UL94V-0)

Resistance To Soldering Heat:

260° C±5° C, 10s(PA6T&PA9T&LCP insulator)

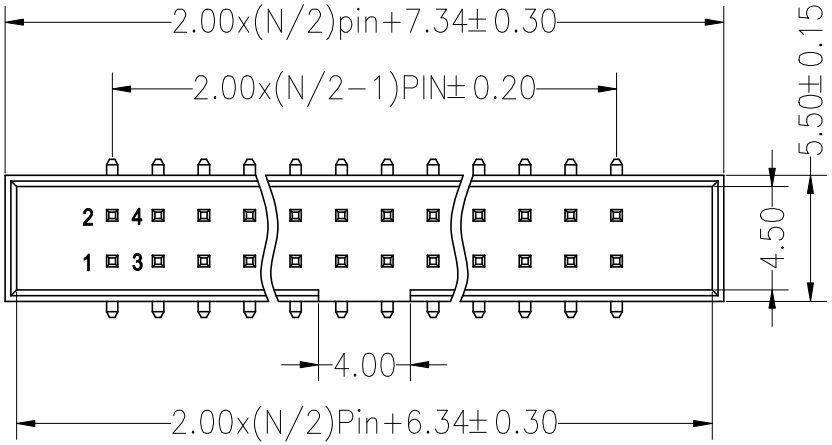

Recommended P.C.B Layout(Top Side)
(PCB BOARD TOLERANCE±0.05)

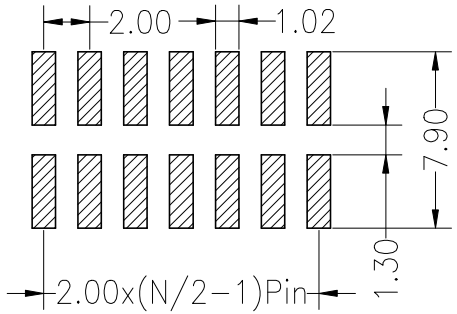

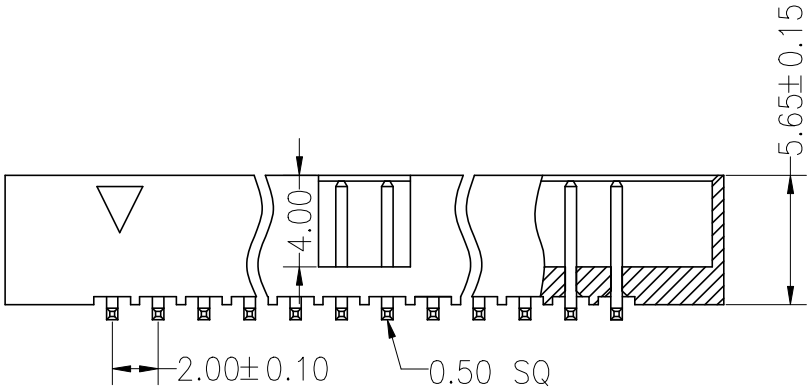

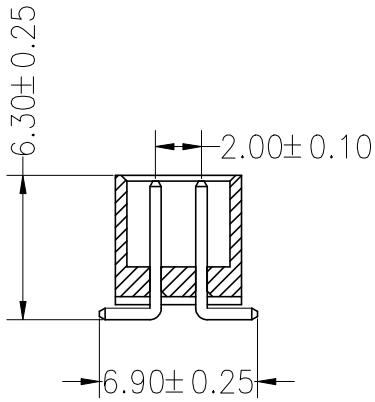

Ordering Information

3220 XX M XX X B K00 X 0X

- No.of Pins: 6--64
- Contact Plating:
  - G0:Gold Flash
  - G1:1u" Gold
  - G2:1.5u" Gold
  - G3:2u" Gold
  - G4:3u" Gold
  - G5:5u" Gold
  - G6:10u" Gold
  - G7:15u" Gold
  - G8:30u" Gold
  - S0:Gold Flash/Tin
  - SN:Tin
- Insulator Material Option:
  - C=BK-PA6T
  - E=BK-PA9T
  - F=BK-LCP
- Packing:
  - 0=PE Bag
  - A=Tray
  - T=Tube
  - P=Tube+Cap

REV	DATE	MODIFICATION DESCRIPTION	CHANGE
A0	2014.11.25	NEW DRAWING	

OPERATION				
DIM	TOL	DRAW	RICH LIN	14.11.25
X.X	±0.30	CHECK		
X.XX	±0.20			
X.XXX	±0.10			
Angle	±3°	APPROVE		

SCALE	FIT
UNIT	mm
SIZE	A4
SHEET	1/1
PROJ.	

JILN® 深圳锦凌电子股份有限公司
SHENZHEN JINLING ELECTRONICS CO.,LTD
Tel: 86-755-27483253 Fax: 86-755-2997-5588

PART NO.	3220XXMXXXBK00X0X
TITLE:	2.0Box Header Npin H5.65 SMT