RoHs

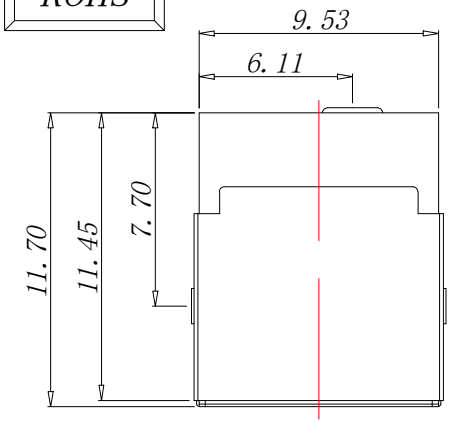

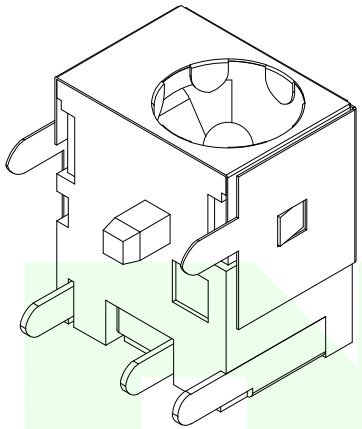

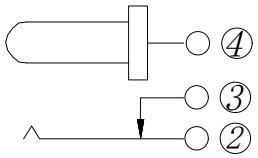

SCHEMATIC

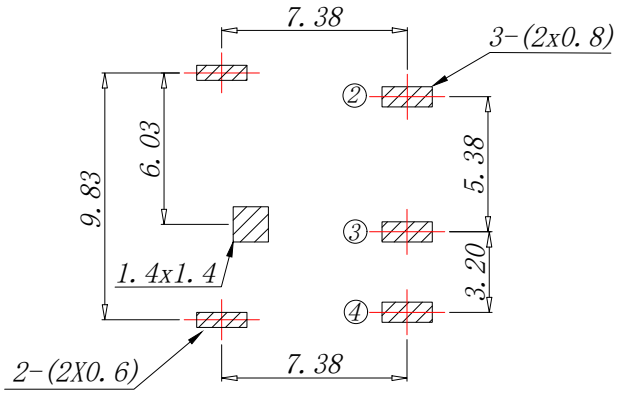

PCB. WELDING DRAWING (TOLERANCE:±0.05)

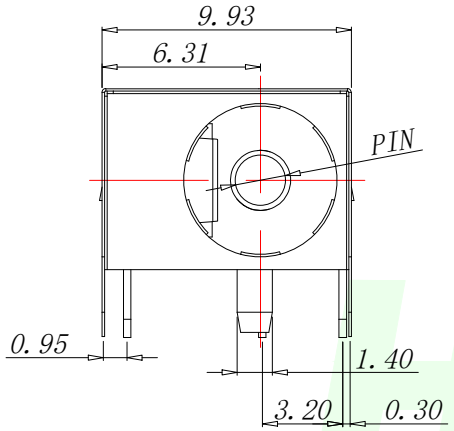

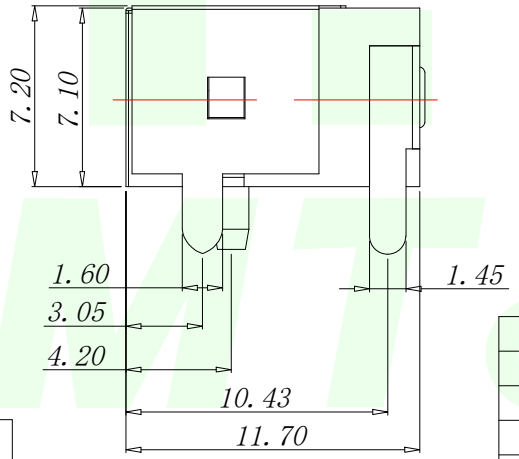

VER	MARK	PR. BY	DESCRIPTION	DATE

Main technical performance	
Rated electrical load	DC 24V 3A
Contact resistance	≤0.03 Ω
Insulation resistance	≥100M Ω DC250V
Pressure resistance	AC 500V 1min
Insertion force	3-20N
Operating temperature range	-20C° ~+70C°
service life	5000cycles

PIN	MODLE
ϕ2.0	DC044A-B20
ϕ2.5	DC044A-B25

LTR	PART NAME	QTY	MATERIAL	REMARK
4	TERMINAL	1	BRASS	MB:CuSn PLATED
3	HOUSING	1	PBT	BLACK
2	TIP SPRING	1	PHOSPHOR BRONZE	MB:CuSn PLATED
1	CENTER PIN	1	BRASS	MB:CuSn PLATED

GENERAL TOLERANCES UNLESS SPECIFIED

X.° ±0.30	X.° ±5°
X.X° ±0.25	X.X° ±1°
X.XX°±0.15	

MANUFACTURE DWG

HMT CONN 深圳市华明通电子有限公司 Shenzhen Huamingtong Electronics Co., Ltd

PART NO. DC044A-BN

TITLE: DC SOCKET

DESIGN: James

CHED: Talen

APPD: Sophia

CUSTOMER	SIZE	UNITS
	A4	MM
	SCALE	SHEET
	N:A	1/1