THIS DRAWING IS UNPUBLISHED. RELEASED FOR PUBLICATION -.- .
© COPYRIGHT - BY TYCO ELECTRONICS CORPORATION. ALL RIGHTS RESERVED.

LOC	DIST
DF	DO

REVISIONS

P	LTR	DESCRIPTION	DATE	DWN	APVD
	C	REV PER ECO-06-006664	29MAR06	TK	CT

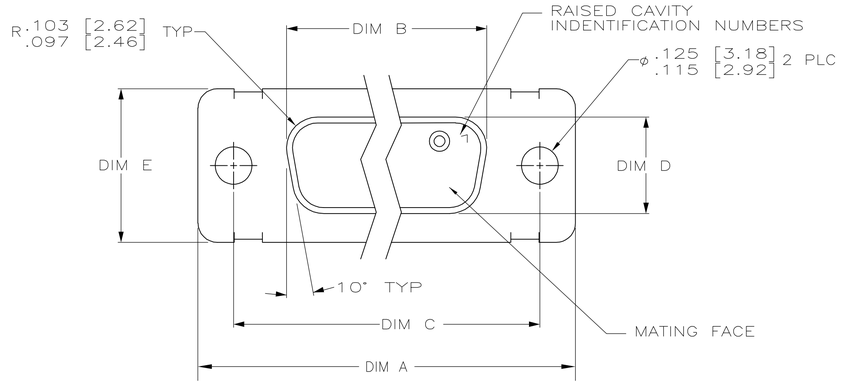

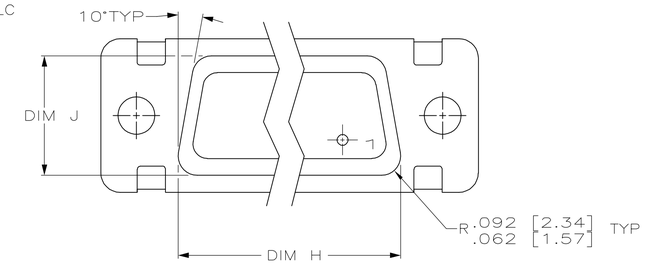

VIEW Z–Z

1. SEE SHEET 2 FOR RECOMMENDED P.C. BOARD LAYOUT
2. TRUE POSITION TOLERANCE FOR P.C. BOARD LAYOUT IS .010 AT MAXIMUM MATERIAL CONDITION.
3. REPLACEMENT CONTACT AMP PART NO 207684-3
4. THESE CONNECTORS MATE WITH ANY PLUG CONNECTORS OF THE SAME CONFIGURATION AS DEFINED BY MIL-C-24308.
5. MARKED WITH .047-.062 HIGH CHARACTERS
   FAR SIDE REFERS TO THE WIDE SIDE OF THE KEYSTONE
   NEAR SIDE REFERS TO THE NARROW SIDE OF THE KEYSTONE
   IF THE REAR SHELL IS TOO SMALL FOR THE ENTIRE
   PART NUMBER,MARKING SHALL BE LOCATED AS FOLLOWS:
   A. "AMP" AND DATE CODE ON FRONT SHELL, NEAR SIDE.
   B. AMP PART NUMBER ON REAR SHELL, NEAR SIDE.
6. POINT OF ELECTRICAL ENGAGEMENT – AS MEASURED WITH A SQUARE ENDED TEST PIN.

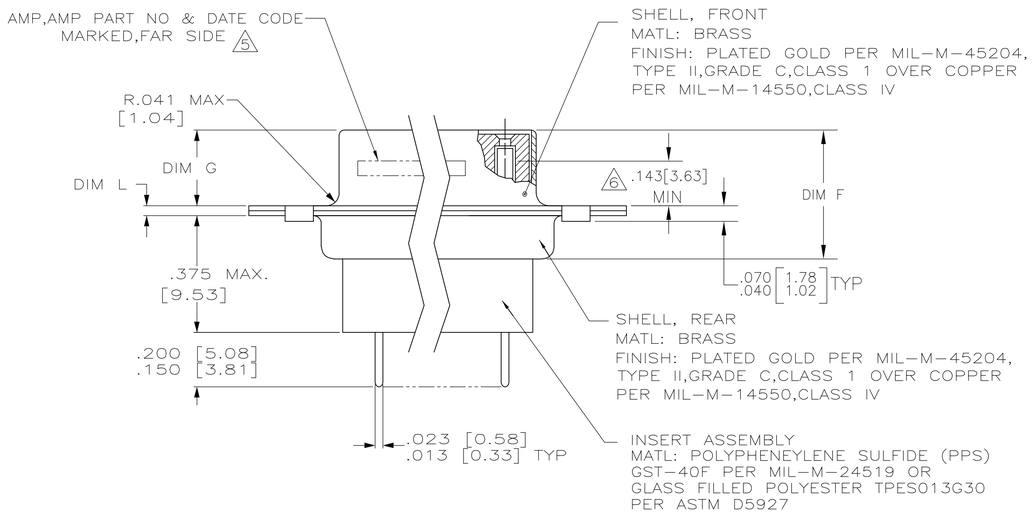

L	J	H	G	F	E	D	C	B	A	INSERT ARRANGEMENT	NO OF POS	SHELL SIZE	PART NUMBER
.049 [1.24] .029 [0.74]	.544 [13.82] .524 [13.31]	2.188 [55.58] 2.168 [55.07]	.248 [6.30] .238 [6.05]	.439 [11.15] .419 [10.64]	.620 [15.75] .590 [14.99]	.428 [10.87] .418 [10.62]	2.411 [61.24] 2.401 [60.99]	2.069 [52.55] 2.059 [52.30]	2.650 [67.31] 2.620 [66.55]	MS18277-2	78	5	1218697-5
.040 [1.02] .020 [0.51]	.432 [10.97] .412 [10.46]	2.282 [57.96] 2.262 [57.45]	.248 [6.30] .238 [6.05]	.439 [11.15] .419 [10.64]	.509 [12.93] .479 [12.17]	.316 [8.03] .306 [7.77]	2.505 [63.63] 2.495 [63.37]	2.164 [54.97] 2.154 [54.71]	2.744 [69.70] 2.714 [68.94]	MS18276-2	62	4	1218697-4
.040 [1.02] .020 [0.51]	.432 [10.97] .412 [10.46]	1.093 [27.76] 1.073 [27.25]	.248 [6.30] .238 [6.05]	.439 [11.15] .419 [10.64]	.509 [12.93] .479 [12.17]	.316 [8.03] .306 [7.77]	1.317 [33.45] 1.307 [33.20]	.976 [24.79] .966 [24.54]	1.556 [39.52] 1.526 [38.76]	MS18274-2	26	2	1218697-2

THIS DRAWING IS A CONTROLLED DOCUMENT.

DIMENSIONS: INCHES [MM]

TOLERANCES UNLESS OTHERWISE SPECIFIED:
0 PLC ± –
1 PLC ± –
2 PLC ± –
3 PLC ± –
4 PLC ± –
ANGLES ± 0°30'

MATERIAL: SEE CALLOUTS
FINISH: SEE CALLOUTS

DWN 30MAR00 C.C.THOMAS
CHK 05APR00 CHAD BAKER
APVD 05APR00 CHAD BAKER
PRODUCT SPEC –
APPLICATION SPEC –
WEIGHT –

tyco Electronics
Tyco Electronics Corporation
Harrisburg, PA 17105-3608

NAME –
AMPLIMITE ASSY,RECEPTACLE,NON-MAGNETIC,
90 SERIES, WITH CRIMP SNAP CONTACTS

SIZE A1 | CAGE CODE 00779 | DRAWING NO C-1218697 | RESTRICTED TO –

CUSTOMER DRAWING | SCALE 4:1 | SHEET 1 OF 2 | REV C

THIS DRAWING IS UNPUBLISHED. RELEASED FOR PUBLICATION -.- .
© COPYRIGHT - BY TYCO ELECTRONICS CORPORATION. ALL RIGHTS RESERVED.

LOC	DIST
DF	D0

REVISIONS

P	LTR	DESCRIPTION	DATE	DWN	APVD
	—	SEE SHEET 1	—	—	—

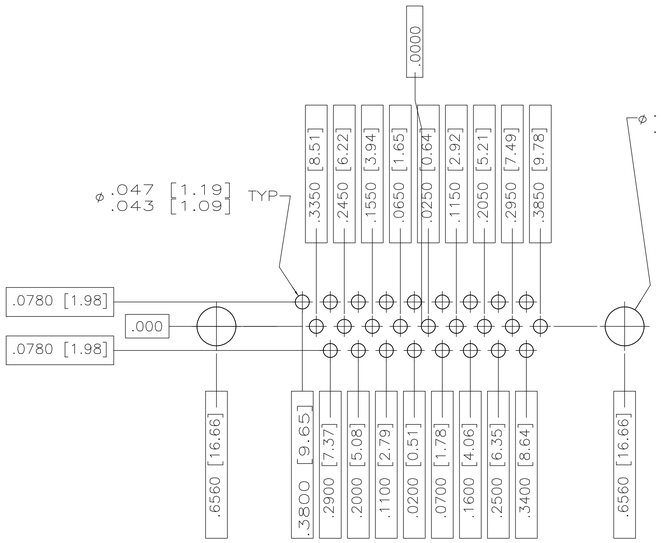

RECOMMENDED P.C. BOARD LAYOUT
SHELL SIZE 2 (26 POSITION)

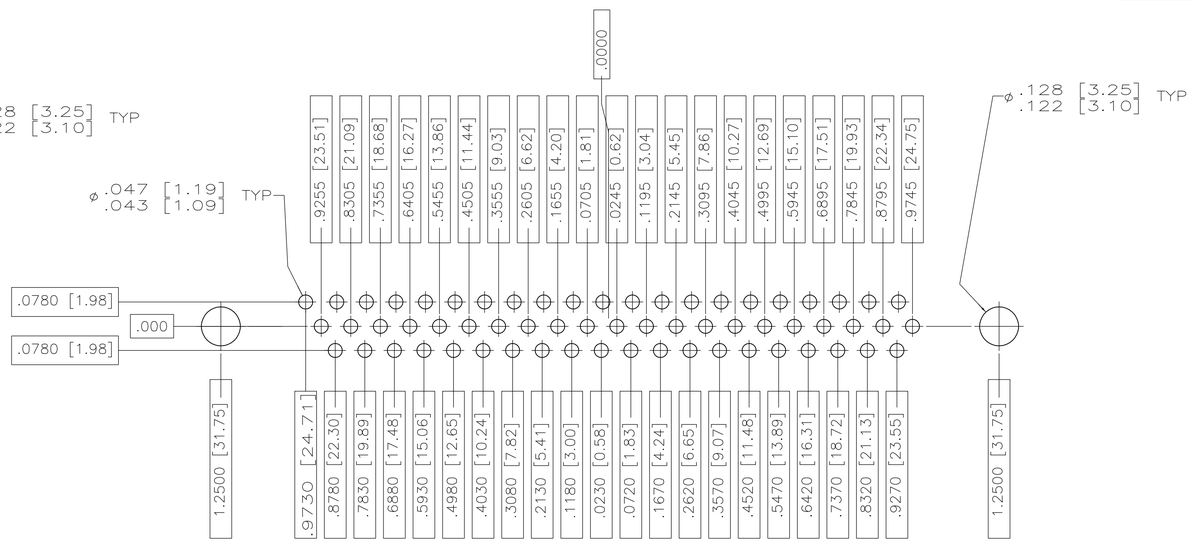

RECOMMENDED P.C. BOARD LAYOUT
SHELL SIZE 4 (62 POSITION)

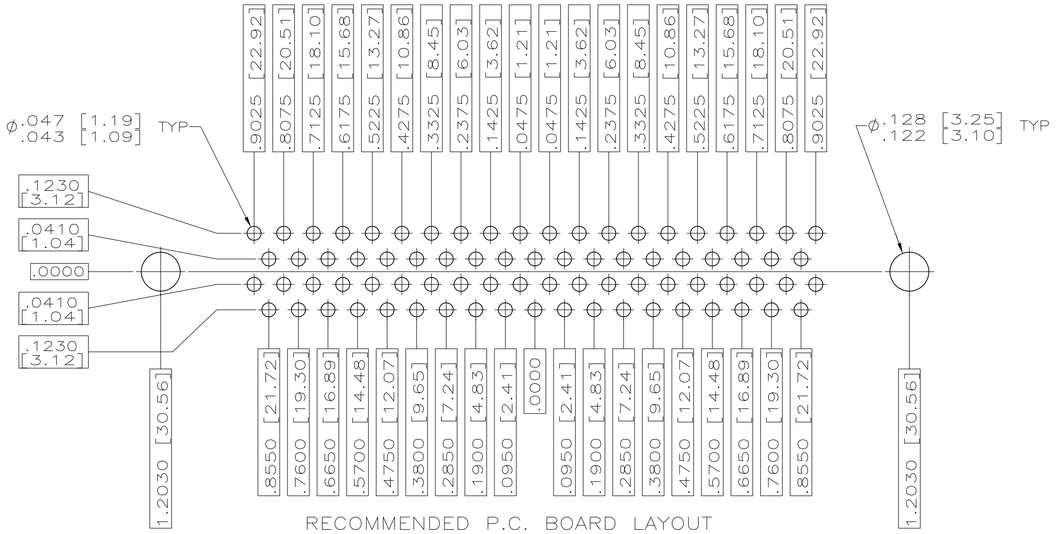

RECOMMENDED P.C. BOARD LAYOUT
SHELL SIZE 5 (78 POSITION)

THIS DRAWING IS A CONTROLLED DOCUMENT.

DIMENSIONS: INCHES [mm]

TOLERANCES UNLESS OTHERWISE SPECIFIED:
0 PLC ± –
1 PLC ± –
2 PLC ± –
3 PLC ± .005
4 PLC ± –
ANGLES ± –

MATERIAL: SEE CALLOUTS
FINISH: –

DWN C.C.THOMAS 05APR00
CHK CHAD BAKER 05APR00
APVD CHAD BAKER 05APR00
PRODUCT SPEC —
APPLICATION SPEC —
WEIGHT —

tyco Electronics
Tyco Electronics Corporation
Harrisburg, Pa 17105-3608

NAME —
AMPLIMITE RCPT ASSY WITH LOADED POSTED CONTACTS
NON-MAGNETIC,SERIES 90,SIZE 2 & 4—

SIZE	CAGE CODE	DRAWING NO	RESTRICTED TO
A1	00779	C-1218697	—

CUSTOMER DRAWING
SCALE 4:1 SHEET 2 OF 2 REV C