General tolerances(mm)														
0 ~ 3	>3 ~ 6	>6 ~ 10	>10 ~ 18	>18 ~ 30	>30 ~ 50	>50 ~ 80	>80 ~ 120	>120 ~ 180	>180 ~ 250	>250 ~ 315	>315 ~ 400	>400 ~ 500	>500	0.1/10
±0.12	±0.18	±0.22	±0.26	±0.31	±0.37	±0.57	±0.80	±0.93	±1.05	±1.15	±1.60	±2.20	±2.50	±2°

UL Standard	B	C	D
Rated Voltage(V)/Current(A)	300/25	/	/
IEC Standard			
Overvoltage Category/Pollution Degree	Ⅲ/3	Ⅲ/2	Ⅱ/2
Rated Voltage(V)/Current(A)	450/32	/	/
Rate Impulse Voltage(kV)	4	/	/
Torque Tightening(N·m/Lb.in)	M4 1.2/12.24		
Wire Range(rigid and flexible)(mm²/AWG)	22~12/0.5~4.0		
Pitch(mm)/Poles	9.50/N=02~26P		
Operating temperature(°C)	−40°~+105°		
Conform to RoHS	Yes		

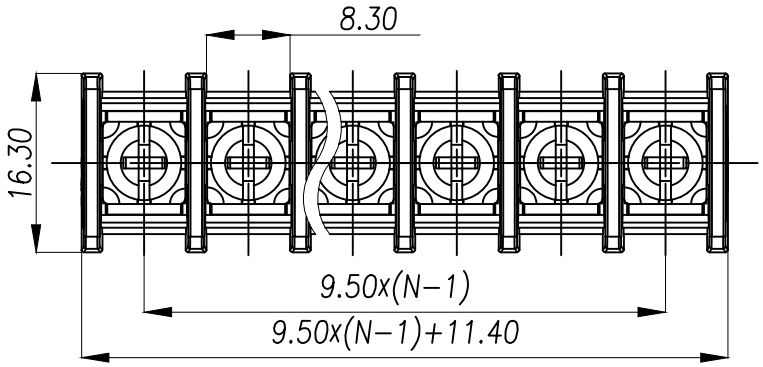

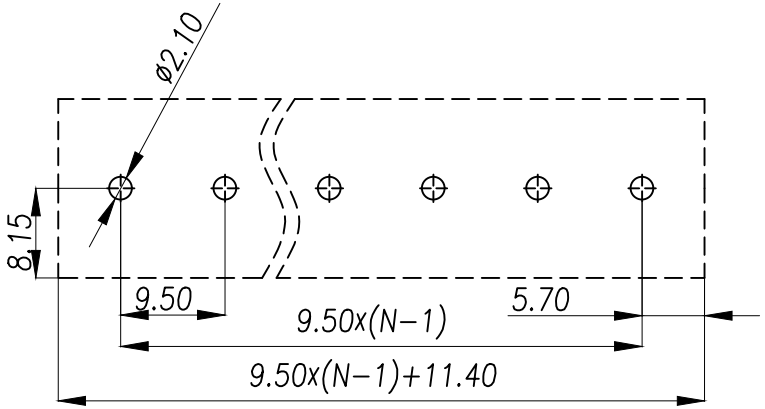

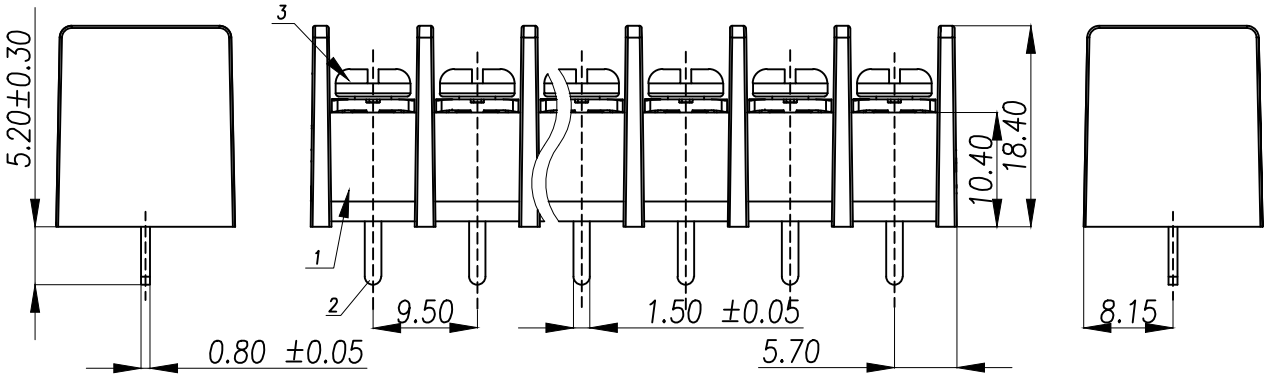

Note:The A&Z(H) in the name means: A(H) and Z(H).			
3	Screw	Steel	Ni Plated
2	Pin header	Copper alloy	Sn Plated
1	Housing	PA66	UL94V−0
ITEM	NAME OF PART	MATERIAL	NOTES

制图 DRAWN	变更内容 DESCRIPTION	日期 DATE	GENERL TOLERANCE		制图 DRAWING	Yu	料号 PART NO.	ZX−DG10−9.5−NP	版本 REV.	A
					审核 CHECK	HUANG	品名 TITLE	CUSTOMER DRAWING	页次 SHEET	1/1
					核准 APPROVAL	RUAN	客户料号 CUTM.NO.			
					单位 UNITS	MM	比例 SCALE	1:1		

兆星精密电子（深圳）有限公司
ShenZhen ZhaoXing Precision electronics Co., Ltd.