REV.	ECN NO.	DATE	SIGN	DESCRIPTION
B	LE31570252~261	2015/07/23	Yulong_wang	Change to Share Drawing.
C	LEN1680569~580 LEN1680598~603	2016/08/08	Yulong_wang	Add 6Pin & IP69K.
D	E191630	2019/09/19	Ruru	Update Wire Tolarance

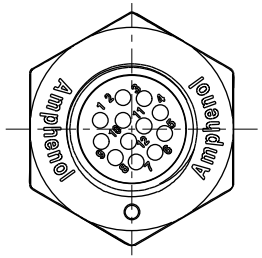

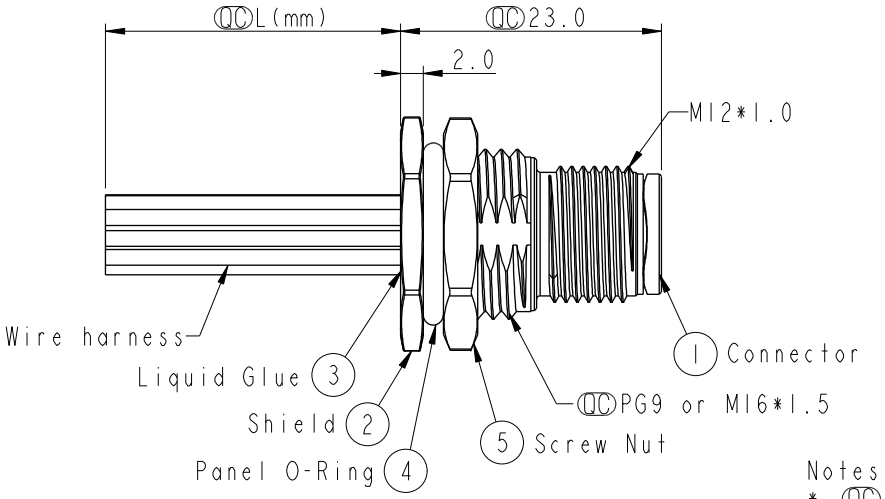

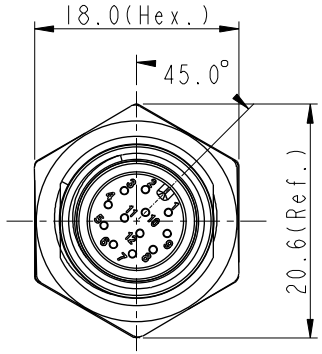

ALTW
CONFIDENTIAL
2019-09-19
R&D DEPT.

Notes:
* QC Important Dimension.
C * Waterproof Rate: IP68, IP69K.
* Connector: Nylon+GF,Black.
* Male Pin: Copper Alloy, Gold Plated.
* Shield:Zinc Alloy,Nickel Plated.
* Screw Nut: Zinc Alloy, Nickel Plated.
* Panel O-Ring:Viton,Black.
* Wire harness: UL1061
* Rated Voltage: 3 & 4Pin 250V dc. or ac.
5Pin 60V dc. or ac.
6~12Pin 30V dc. or ac.
* Rated Current: 3~5Pin 4A
6~8Pin 2A
10~12Pin 1.5A
* Operating Temperature: -25~85°C
* For Panel Thickness Max 4.5mm.
* Nut Torque:4-6 Kgf.cm.
D * Wire harness Tolerance: 150~300±15mm
301~1000±20mm
Over1000 ±50/-0mm

(PG9)

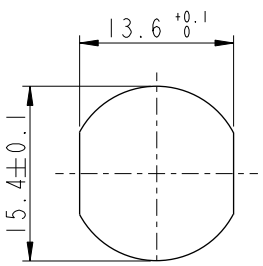

Recommended
Panel Cut-Out

(M16*1.5)

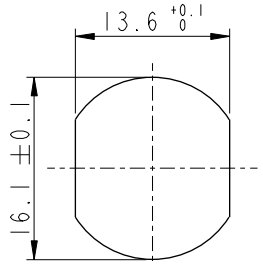

Recommended
Panel Cut-Out

UNIT:mm

TOLERANCE
.X ±0.25
.XX ±0.1
.XXX ±0.05
ANGLES ±1°

TITLE: M12 A-Code Male Conn.
Panel Front With Wire harness

SCALE 3:2 | SIZE A4 | SHEET 1 OF 2
REV. D | WC-REV. A.3 | QC: Inspection item

Amphenol LTW
安費諾亮泰企業股份有限公司

ITEM NO	DRAWN BY: Ruru	DATE: 2019-09-19
DWG NO: M12A-XXPMMX-SF8XXX	CHECKED BY: Rita	DATE: 2019-09-19
CUSTOMER: ALTW	APPROVED BY: Max	DATE: 2019-09-19

THIS DOCUMENT IS SUBJECT TO CHANGE WITHOUT NOTICE. IT IS CONFIDENTIAL AND A PROPERTY OF Amphenol LTW. DISCLOSURE TO THIRD PARTY HAS TO BE AUTHORIZED BY Amphenol LTW.

M 12A - XX P M M X - S F 8 X XX (D)

12A:A-Code

03:3Pin
04:4Pin
05:5Pin
06:6Pin (C)
08:8Pin
10:10Pin
12:12Pin

P:Panel(板端)

M:Male Connector(公座)

M:Male Pin(公Pin)

C:Crimp Type(打端式)
S:Solder Type(焊接式)

15:150mm
20:200mm
∫
95:950mm
Cable Pitch Unit=50mm

A0:1000mm
∫
A5:1500mm
Cable Pitch Unit=100mm
Wire Length (L):150~1500 mm

B:PG9
C:M16*1.5

8:IP68/69K(防水等級68/69K) (C)

F:Front Fasten(前鎖式/Enclosure Rear Mount)
S:Screw(螺紋式)

ALTW
CONFIDENTIAL
2019-09-19
R&D DEPT.

Contacts	Wire harness	AWG	Item No.
12P	UL1061	26	M12A-12PMMS-SF8CXX
10P			M12A-10PMMS-SF8CXX
8P		24	M12A-08PMMS-SF8CXX
6P			M12A-06PMMS-SF8CXX
5P		22	M12A-05PMMC-SF8CXX
4P			M12A-04PMMC-SF8CXX
3P			M12A-03PMMC-SF8CXX
12P		26	M12A-12PMMS-SF8BXX
10P			M12A-10PMMS-SF8BXX
8P		24	M12A-08PMMS-SF8BXX
6P			M12A-06PMMS-SF8BXX
5P		22	M12A-05PMMC-SF8BXX
4P			M12A-04PMMC-SF8BXX
3P			M12A-03PMMC-SF8BXX

(C)

Pin #	Wire	
5	--	
4	Black	黑
3	Blue	藍
2	--	
1	Brown	棕

Pin #	Wire	
5	--	
4	Black	黑
3	Blue	藍
2	White	白
1	Brown	棕

Pin #	Wire	
5	Gray	灰
4	Black	黑
3	Blue	藍
2	White	白
1	Brown	棕

Pin #	Wire	
8	--	
7	Blue	藍
6	Pink	粉
5	--	
4	Yellow	黃
3	Green	綠
2	Brown	棕
1	White	白

Pin #	Wire	
8	Red	紅
7	Blue	藍
6	Pink	粉
5	Gray	灰
4	Yellow	黃
3	Green	綠
2	Brown	棕
1	White	白

Pin #	Wire	
12	--	
11	--	
10	Violet	紫
9	Black	黑
8	Red	紅
7	Blue	藍
6	Pink	粉
5	Gray	灰
4	Yellow	黃
3	Green	綠
2	Brown	棕
1	White	白

Pin #	Wire	
12	Red/Blue	紅/藍
11	Gray/Pink	灰/粉
10	Violet	紫
9	Black	黑
8	Red	紅
7	Blue	藍
6	Pink	粉
5	Gray	灰
4	Yellow	黃
3	Green	綠
2	Brown	棕
1	White	白

Pin Out

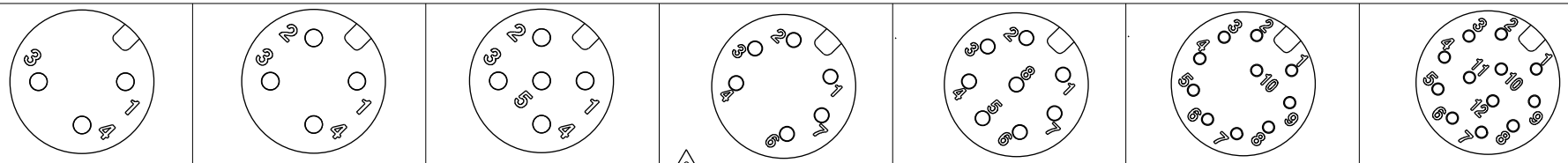

3P 4P 5P (C) 6P 8P 10P 12P

Pin Assignments Front View

UNIT:mm

TOLERANCE
.X ±0.25
.XX ±0.1
.XXX ±0.05
ANGLES ±1°

TITLE: M12 A-Code Male Conn. Panel Front With Wire harness

SCALE 3:2 | SIZE A4 | SHEET 2 OF 2
REV. D | WC-REV. A.3 | (QC):Inspection item

Amphenol LTW
安費諾亮泰企業股份有限公司

ITEM NO	DRAWN BY Ruru	DATE 2019-09-19
DWG NO M12A-XXPMMX-SF8XXX	CHECKED BY Rita	DATE 2019-09-19
CUSTOMER ALTW	APPROVED BY Max	DATE 2019-09-19

W10814-03-RM01A2

THIS DOCUMENT IS SUBJECT TO CHANGE WITHOUT NOTICE. IT IS CONFIDENTIAL AND A PROPERTY OF Amphenol LTW. DISCLOSURE TO THIRD PARTY HAS TO BE AUTHORIZED BY Amphenol LTW.