YAZAKI PART NO.	W_1	H_1	W_2	H_2	APPLICABLE WIRE SIZE
7116-2990-02	2.3	(2.6)	3.7	(2.9)	⚠CAVUS, CAVS 0.3~0.5
7116-2991-02	3.1	(3.1)	5.5	(4.9)	CAVUS, CAVS, AVS 0.85~1.25
7116-2992-02	4.3	(4.4)	6.5	(6.4)	AVS 2~3, AVSS 2

注記

1. かん合相手品番 : 7114-2882-02
: 7114-2883-02
: 7114-2872-02

NOTE

1. MATING PART NO. : 7114-2882-02
: 7114-2883-02
: 7114-2872-02

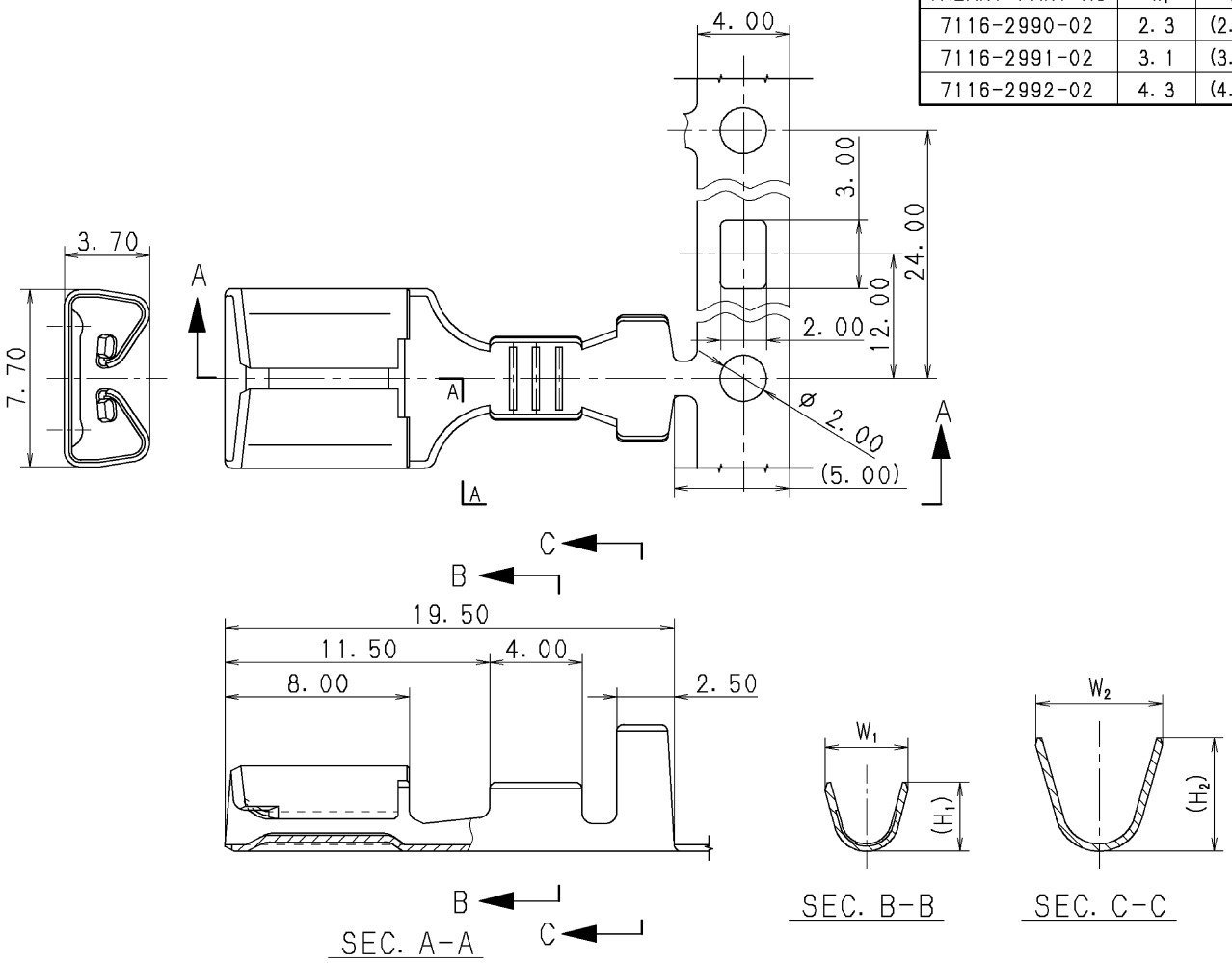

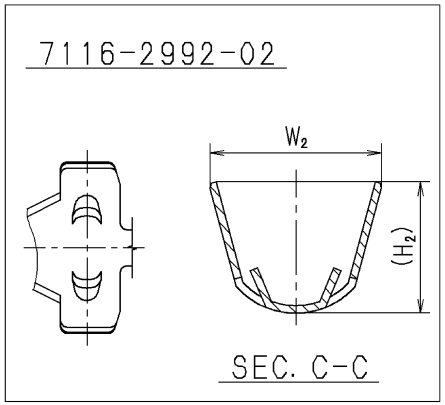

LET	DATE	REVISION RECORD	NO.	CHKD
⚠	2011/08/28	CHANGED NOTE ETC.	C11-Z601	G. M
	1998/03/17	NEW	C98-L142	H. Y

GENERAL TOLERANCE

	10MAX	50MAX	100MAX	250MAX	2500VR	ANGLE	ECCENT
A	±0.15	±0.2	±0.3	±0.5	±0.75	±30′	0.1
B	±0.2	±0.3	±0.55	±0.95	±1.4	±30′	0.1
Ⓒ	±0.3	±0.5	±0.8	±1.4	±2	±30′	0.15

SPECIFIED

MASS g

CUSTOMER

CUSTOMER PART NO. | CUSTOMER DWG NO.

OFFICE | TRIAL PART NO.

VENDOR

VENDOR NO.

DWG TYPE	DWG SOURCE	DWG DATE	UNIT	SCL	ANGLE
R	NEW	1998/01/28	mm	5:1	3

APPROVED	CHECKED	CHECKED	DESIGN	DRAWN
M. KASHIYAMA	———	Y. FUKASE	H. YOSHIDA	G. MAGNAYON
2011/08/28	———	2011/08/28	1997/12/25	2011/08/28

MATL. SPEC. ⚠BRASS (t=0.30)

TREAT. & FIN. ⚠TIN PLATING

NAME MF-SN TERMINAL

PART NO. / CH. CODE 7116-2990-02 ETC.

DWG NO. 7116-2990-02:R

SET DWG NO.

YAZAKI CORPORATION

ISSUE MARK