9-2020

MIL-DTL-38999 Connectors

FOR MILITARY, AEROSPACE AND HARSH ENVIRONMENTS

Amphenol
Aerospace

About Amphenol® Aerospace

Your Source for Interconnect Products

Amphenol Aerospace

Amphenol Aerospace

CONTACT US:

Amphenol Aerospace
40-60 Delaware Avenue
Sidney, NY 13838-1395

Customer Service:
Mon - Fri 8AM - 5PM
Phone: (800) 678-0141
Fax: (607) 563-5157
Online: www.amphenol-aerospace.com

Amphenol Aerospace, Amphenol Commercial Air, and Amphenol Industrial Operations Main Facility in Sidney, NY USA

ABOUT AMPHENOL AEROSPACE:

Amphenol Aerospace, a Division of Amphenol Corporation, is one of the largest manufacturers of interconnect products in the world for the Military, Commercial Aerospace and Industrial markets. Amphenol designs, manufactures and markets circular and rectangular, electronic, fiber optic, EMI/EMP filter, and a variety of special applications connectors and interconnect systems.

Our state-of-the-art facility is nestled at the foothills of the Catskill Mountains in Sidney, NY. The Amphenol complex houses many technologies including CNC machining, die-casting, molding, impact and extruding, plating, screw machining and process controls. Our fully equipped material evaluation lab and engineering organization utilize the latest in computer aided design software and analysis tools, allowing us to design, test, and qualify advanced interconnect systems. Amphenol's interconnect products are supplied to thousands of OEMs worldwide and are supported by our worldwide sales and engineering force, including the largest global network of electronic distributors.

CARE

Customer-Centric:
Our **#1 priority** is our customers who deserve quality product on time.

Accountable:
Clear owners, clear actions, clear results.

Reliable:
What we build matters and quality is imperative.

Enthusiastic:
Challenges create rewarding opportunities. Enthusiasm is contagious and we will spread it.

QUALITY ASSURANCE:

Amphenol Aerospace has been awarded both AS9100 - Revision C and ISO9001:2008 Quality Assurance Certifications.

MIL-DTL-38999, Series I LJT, II JT, III TV, HD

Insert Availability and Identification Chart

Series JT II	Series LJT I	Series TV III	Military III	MIL-DTL-27599 JT/LJT Solder	Crimp	Hermetics Class H	Hermetics Class Y	Hermetics TV*	Service Rating	Total Contacts	Contact Size ■ 23 HD	22D	22M	22	20	16	16 (Cx)	12	12 (Coax)	10 (Power)	8 (Power)	8 (Coax)	8†† (Twinax)	4
		7-D2							M	2		2												
8-2■				P					M	2					2									
8-3■				X	NA	P	P		M	3					3									
	9-3■			X																				
		9-5★■							G	1													1	
8-6				X	X	P	P		M	6			6											
	9-6			X	X	P	P																	
	9-7■			X					M	7			7											
		9-9■			X				N	9	9													
		9-12			◆				M	1								1						
	9-22■			X					I	2					2									
8-35					X	P	P		M	6		6												
	9-35	9-35	A35		X	P	P	P																
8-44					X	P	P		M	4				4										
	9-44				X																			
		9-94■			◆				M	2					2									
8-97■				X					M	4			2		2									
8-98				S	X	P	P		I	3					3									
	9-98	9-98	A98	X	X	P	P	P																
		11-1«			◆				I	1													1	
	11-2★	11-2★	B2		X	P**			I	2						2								
10-4					3				I	4					4									
	11-4	11-4	B4	X	2																			
10-5				X	X	P	P		I	5					5									
	11-5	11-5	B5	X	X			P																
	11-6■			S					I	6					6									
		11-12			◆				II	1								1						
10-13				X	X	P/S	P/S		M	13			13											
	11-13			X	X	P/S	P/S																	
		11-19■			X				N	19	19													
10-35					X	P/S	P/S		M	13		13												
	11-35	11-35	B35		X	P/S	P/S	P																
		11-54■			X				II	4		4												
10-98				X	X	P/S	P/S		I	6					6									
	11-98	11-98	B98	X	X	P/S	P/S	P																
10-99					X	P	P		I	7					7									
	11-99	11-99	B99		X			P																
12-3				X	X	P	P		II	3						3								
	13-3■				P																			
12-4				X	X	P	P		I	4						4								
	13-4★	13-4★	C4	X	X	P	P	P																
12-8				X	X	P	P		I	8					8									
	13-8	13-8	C8	X	X	P	P	P																
		13-13■							I, Fiber Optic	4						2**		2						
12-22					X	P/S	P/S		M	22			22											
	13-22			X	X	P/S	P/S																	
		13-26■			◆				M	8		6						2						
		13-32■			◆				N	32	32													
12-35					X	P/S	P/S		M	22		22												
	13-35	13-35	C35		X	P/S	P/S	P																
		13-63■			◆				I	4						2		2						
12-98				X	X	P/S	P/S		I	10					10									
	13-98	13-98	C98	X	X	P/S	P/S	P																

X Completely tooled.
\+ Majority of tooling is completed (contact Amphenol Aerospace for availability).
◆ Not tooled for 02-R.
P Available with Pin contacts only
S Available with Socket contacts only
P/S Available with Pin contacts or Socket contacts
★ Ground plane proprietary option available. Arrg. 9-5 is exclusively ground plane type.
■ Not Mil-Qualified.
✧ 21-75 is Mil-Qualified with twinax contacts only.
Note: MS connector 21-75 is supplied with size 8 twinax. Commercial connector 21-75 is supplied with size 8 coax.
■ **HD** designates High Density 38999 Series III insert patterns which use size 23 contacts only. Not rated over 175°C.

^ Supplied with D38999/62-A for Twinax, D38999/62-B for Coax
* Hermetic inserts - solder termination standard. (Contact Amphenol Aerospace for optional PCB or eyelet termination).
** Two size 16 contacts dedicated to fiber optics. See the Fiber Optic section for more information.
*** For use in MIL-STD-1760 applications (see pages 75 and 76).
† For RG 180/U and RG 195/U cables only.
†† Size 8 Coax and Twinax are interchangeable.

(2) Not Tooled for RP or 02RE
(3) Pin inserts only, not tooled for RP or 02RE (Consult Amphenol Aerospace for avail.)
(5) MS Connector 21-79 has provision for two size 8 coax contacts. Coax contacts are not supplied unless specified by customer.
≈ Patterns come with D38999/62 sealing boots
« Must buy contacts rfrom Amphenol Socopex

MIL-DTL-38999, Series I LJT, II JT, III TV, HD

Insert Availability and Identification Chart

Amphenol Aerospace

Series JT II	Series LJT I	Series TV III	Military III	MIL-DTL-27599 JT/LJT Solder	Crimp	Hermetics Class H	Hermetics Class Y	Hermetics TV*	Service Rating	Total Contacts	Contact Size 23 HD	22D	22M	22	20	16	16 (Cx)	12	12 (Coax)	10 (Power)	8 (Power)	8 (Coax)	8†† (Twinax)	4
		13-CB■			S				M			4						2						
		15-AC■			◆				M	26		24				2								
		15-AT■			X				I	13		10						3						
		15-BA			◆				M	25		22				3								
14-4■					2				I	4								4						
	15-4■	15-4■			2																			
14-5				X	X	P	P		II	5						5								
	15-5★	15-5★	D5	X	X	P	P	P																
14-15				X	X	P	P		I	15					14	1								
	15-15	15-15	D15	X	X	P/S	P/S	P	I															
14-18				X	X	P/S	P/S		I	18					18									
	15-18	15-18	D18	X	X	P/S	P/S	P																
14-19■				X	X				I	19					19									
	15-19	15-19	D19		X	P	P	P																
14-35					X	P	P		M	37		37												
	15-35	15-35	D35		X	P/S	P/S	P																
14-37				X	X	P	P		M	37			37											
	15-37			X	X	P	P																	
		15-55■			X				N	55	55													
14-68■					2		P	P	1	8							8							
	15-68■	15-68■		X	X																			
14-97					X	P	P		I	12					8	4								
	15-97	15-97	D97	X	X	P		P																
	17-2	17-2	E2		X				M	39		38											1	
		17-3≈	E3≈		X				M	39		38											1	
		17-EA■			◆				M	19		10			3		2	4						
		17-EC■			◆				M	41		32			9									
		17-EG■			◆				M			16						4						
		17-EL			◆				M	18		16											2	
16-6					X	P	P		I	6								6						
	17-6	17-6	E6		X	P	P	P																
16-8				X	X	P	P		II	8							8							
	17-8★	17-8★	E8	X	X	P/S	P/S	P																
		17-11							N	11					8			2	1					
16-13■					2				I	13							13							
	17-13■	17-13■			2																			
	17-22■	17-22★■			◆				Coax	4									2			2		
	17-25■	17-25■			2				M	24		22										2		
16-26				X	X	P/S	P/S		I	26					26									
	17-26	17-26	E26	X	X	P/S	P/S	P																
16-35					X	P	P		M	55		55												
	17-35	17-35	E35	X	X	P	P	P																
16-42					X				M	42				42										
	17-42■				P																			
		17-52■			X				M	2													2	
16-55				X	X	P/S	P/S		M	55			55											
	17-55			X	X	P/S	P/S																	
		17-60■			X				I/Coax	10		8										2		
		17-73■			X				N	73	73													
16-99				X	X	P	P		I	23					21	2								
	17-99	17-99	E99	X	X	P	P																	
		19-AD■			X				Inst.	17					16								1	
		19-A4«			◆				M	4													4	
		19-FA■			◆				M	23		6			8	7		2						
18-11				X	X	P	P		II	11						11								
	19-11★	19-11★	F11	X	X	P	P	P																
		19-17«			◆				M	17		10	1				4						2	
	19-18	19-18	F18		2				M	18		14											4	
		19-19≈	F19≈		2				M	18		14											4	
18-28				X	X				I	28					26		2							
	19-28■	19-28	F28	X	P																			
18-30				X	X				I	30					29		1							
	19-30■	19-30■		X	P																			
		19-31■			X				M	15		12						1				2		

MIL-DTL-38999, Series I LJT, II JT, III TV, HD

Insert Availability and Identification Chart

Series JT II	Series LJT I	Series TV III	Military III	MIL-DTL-27599 JT/LJT Solder	Crimp	Hermetics Class H	Hermetics Class Y	Hermetics TV*	Service Rating	Total Contacts	Contact Size 23 HD	22D	22M	22	20	16	16 (Cx)	12	12 (Coax)	10 (Power)	8 (Power)	8 (Coax)	8†† (Twinax)	4
18-32				X	X	P/S	P/S		I	32					32									
	19-32	19-32	F32	X	X	P/S	P/S	P																
18-35					X	P	P		M	66		66												
	19-35	19-35	F35		X	P	P	P																
18-53				X	X				M	53				53										
	19-53■				P																			
18-66				X	X	P	P		M	66			66											
	19-66				X	P	P																	
	19-67■			X	3	S	S		M	67			67											
18-68■					2				I	18							18							
	19-68■	19-68■			3																			
18-96■					2				I	9								9						
		19-88■			X				N	88	88													
20-1					X	P	P		M	79			79											
		21-AJ			◆				M															
		21-AZ								22		19										3		
	21-1				X	P/S	P/S		M															
20-2					X				M	65				65										
	21-2■				X				M															
20-11■					3				I	11								11						
	21-11★	21-11★	G11		X				I															
20-16				X	X	P/S	P/S		II	16						16								
	21-16★	21-16★	G16	X	X	P	P	P	II															
	21-25■								I	25					25									
	21-27■			X					I	27					27									
		21-29	G29		X				I	27					19	4		4						
20-35					X	P	P		M	79		79												
	21-35	21-35	G35		X	P/S	P/S	P	M															
20-39				X	X	P	P		I	39					37	2								
	21-39	21-39	G39	X	X	P	P	P																
20-41				X	X	P	P		I	41					41									
	21-41	21-41	G41	X	X	P/S	P/S	P																
		21-A48■							M	4											4			
	21-75★	21-75★✧	G75		2				N M	4												4	(4)	
		21-76★✧≈	G76^		2				N M	4												4	(4)	
	21-79■	21-79■			2				II	19		17										2	(2)	
		21-121■			X				N	121	121													
22-1					X	P/S	P/S		M	100			100											
	23-1				X	P	P																	
22-2				X	X	P	P		M	85				85										
	23-2			X	X	P	P																	
	23-6★■	23-6★■		X	P				M	6													6	
22-14■					2 ◆				I	14								14						
	23-14■	23-14■			2 ◆																			
22-21				X	X	P	P		II	21						21								
	23-21★	23-21★	H21	X	X	P	P	P																
22-32				X	X	P	P		I	32					32									
	23-32■			X	P																			
	23-34■			X					I	34					34									
22-35					X	P/S	P/S		M	100		100												
	23-35	23-35	H35		X	P	P	P																
22-53■					P				I	53					53									
	23-53	23-53	H53	X	X	P/S	P/S	P																
		23-54 ■			X				M	53		40				9		4						
22-55				X	X	P	P		I	55					55									
	23-55	23-55	H55		X			P																
		23-63 ■			◆				M	57		49					4		4					
	23-97■			X					II	16						16								
	23-99■			X					II	11						11								
		23-151 ■		◆	X				N	151	151													
24-1					X	P	P		M	128			128											
	25-1				X	P	P																	
24-2					X				M	100				100										
	25-2				X																			
24-4					X	P	P		I	56					48	8								
	25-4	25-4	J4		X			P																
	25-7■	25-7	J7		X				M Twx	99		97										2		

MIL-DTL-38999, Series I LJT, II JT, III TV, HD

Insert Availability and Identification Chart

Amphenol Aerospace

Series JT II	Series LJT I	Series TV III	Military III	MIL-DTL-27599 JT/LJT Solder	Crimp	Hermetics Class H	Hermetics Class Y	Hermetics TV*	Service Rating	Total Contacts	■ 23 HD	22D	22M	22	20	16	16 (Cx)	12	12 (Coax)	10 (Power)	8 (Power)	8 (Coax)	8†† (Twinax)	4
		25-9≈	J9≈		X				M Twx	99		97										2		
		25-8★	J8		◆				Twinax	8													8	
		25-10★≈	J10≈		◆				Twinax	8													8	
		25-11***	J11		2				N	11					2					9				
		25-16■			◆				M	8					6									2
		25-17■			◆				M	42		36											6	
24-19■					X	P	P		I	19								19						
	25-19★	25-19★	J19		X			P																
	25-20■	25-20***	J20		2 ◆				N	30					10	13			4				3	
		25-21***≈	J21≈		2 ◆				N	30					10	13			4				3	
24-24					X	P	P		I	24						12		12						
	25-24★	25-24★	J24		X	P	P																	
		25-26■★			✦				I	25					16			5				4		
24-29					X				I	29						29								
	25-29★	25-29★	J29	X	X																			
24-35					X	P	P		New	128		128												
	25-35	25-35	J35		X	P	P	P	M															
24-37					X				I	37						37								
	25-37★	25-37★	J37		X																			
		25-41■			◆				N Inst.	41		22			3	11			2				3	
24-43■					3				I	43					23	20								
	25-43	25-43	J43	X	2 ◆																			
	25-46	25-46	J46		2 ◆				I	46					40	4						2		
		25-47≈	J47≈		2 ◆				I	46					40	4						2		
24-61				X	X	P	P		I	61			61											
	25-61	25-61	J61	X	X	P	P	P																
		25-88			◆				Coax	8												8		
		25-90	J90		◆				I	46					40	4							2	
		25-91≈	J91≈		◆				I	46					40	4							2	
		25-187 ■			X				N	187	187													
		25-1A ■			◆				N	8						4								4
		25-AT ■			X				M	60		31			12	13			2				2	
		25-F4 ■			X				M/I	66		49				13		4						

X Completely tooled.
\+ Majority of tooling is completed (contact Amphenol Aerospace for availability).
◆ Not tooled for 02-R.
P Available with Pin contacts only
S Available with Socket contacts only
P/S Available with Pin contacts or Socket contacts
★ Ground plane proprietary option available. Arrg. 9-5, 26-62 is exclusively ground plane type.
■ Not Mil-Qualified.
✧ 21-75 is Mil-Qualified with twinax contacts only.
* Hermetic inserts - solder termination standard. (Contact Amphenol Aerospace for optional PCB or eyelet termination).
^ Supplied with D38999/62-A for Twinax, D38999/62-B for Coax

■ HD High Density which use size 23 contacts only. Not rated over 175°C.
** Two size 16 contacts dedicated to fiber optics. See the Fiber Optic Section for more information.
*** For use in MIL-STD-1760 applications (see pages 75 and 76).
† For RG 180/U and RG 195/U cables only.
†† Size 8 Coax and Twinax are interchangeable.
(2) Not Tooled for RP or 02RE
(3) Pin inserts only, not tooled for RP or 02RE (Consult Amphenol for avail.)
(4) MS connector 21-75 is supplied with size 8 twinax. Commercial connector 21-75 is supplied with size 8 coax.
(5) MS Connector 21-79 has provision for two size 8 coax contacts. Coax contacts are not supplied unless specified by customer.
≈ Patterns come with D38999/62 sealing boots

MIL-DTL-38999, Series I LJT, II JT, III TV, HD

Insert Availability and Identification Chart

TV SERIES III-PYLE

SELECT SHELL SIZE - SPECIAL INSERT ARRANGEMENT

(Not Mil-Spec Qualified)

Shell Size-Insert Arrg.	Crimp	Hermetics*	Service Rating	Total Contacts	Comments	Contact Size 22D	20	16	12
9-2	X		I	2	Formerly Pyle		2		
15-4	X		II	4	Formerly Pyle				4
15-25	X		M	25	Formerly Pyle	22		3	
17-20	X		M	20	Formerly Pyle	16			4
21-12	X		I	12	Formerly Pyle		3		9
21-21	X		M/Inst.	41	Improved sealing	32			9
21-99	X		M	16	Formerly Pyle	5			11
25-92	X		M	101	Formerly Pyle	92		9	
25-97	X		M	42	Formerly Pyle	26		3	13

LJT SERIES I-PYLE

SELECT SHELL SIZE - SPECIAL INSERT ARRANGEMENT AND SIZE

(Not Mil-Spec Qualified)

Shell Size-Insert Arrg.	Crimp	Service Rating	Total Contacts	Comments	Contact Size 22D	20	16	12
25-64	X		64	Formerly Pyle	40	8	10	6

X Completely tooled.
\+ Majority of tooling is completed (contact Amphenol Aerospace for availability).
◆ Not tooled for 02-R.
P Pin inserts only (contact Amphenol Aerospace for socket availability).
★ Ground plane proprietary option available. Arrangement 9-5, 25-62 is exclusively ground plane type.
■ Not Mil-Qualified.
* Hermetic inserts - solder termination standard. (Contact Amphenol Aerospace for optional PCB or eyelet termination).
** Two size 16 contacts dedicated to fiber optics. See the Fiber Optic section for more information.
*** For use in MIL-STD-1760 applications (pgs. 75 and 76).
† For RG 180/U and RG 195/U cables only.
†† Size 8 Coax and Twinax are interchangeable.
Note: 25L-3 and 25L-7 use longer shells.
(PWR) Suffix at end of part number to replace coax, twinax, and fiber contacts with power contacts.

XL38999-NON-STANDARD SHELL SIZES

- Special Insert Arrangement

Shell Size-Insert Arrg.	Crimp	Hermetics*	Service Rating	Total Con-tacts	Contact Size 22D	20	8	4	0
25L-3	X		II	3			1	2	
25L-7	X		II	7			7		
33-3	X		II	3				1	2
33-5	X		II	5				5	
33-6	X		II	6			2	4	
37-5	X		II	4					4

(Insert arrangements requiring non-standard shells)

MIL-DTL-38999, Series I LJT, II JT, III TV, HD

Insert Arrangements

Amphenol Aerospace

Front face of pin inserts illustrated

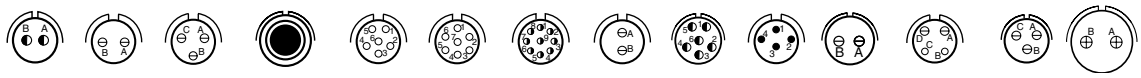

Shell Size & Insert Arrg. for:														
Series II JT		8-2	8-3		8-6				8-35	8-44		8-97	8-98	
Series I LJT			9-3		9-6	9-7		9-22	9-35	9-44			9-98	11-2
Series III TV	7-D2			9-5			9-9 HD		9-35		9-94		9-98	11-2
Service Rating	M	M	M	Grounded	M	M	N	I	M	M	M	M	I	I
Number of Contacts	2	2	3	1	6	7	9	2	6	4	2	2 2	3	2
Contact Size	22D	20	20	8 Twinax	22M	22M	23	20	22D	22	20	22M 20	20	16

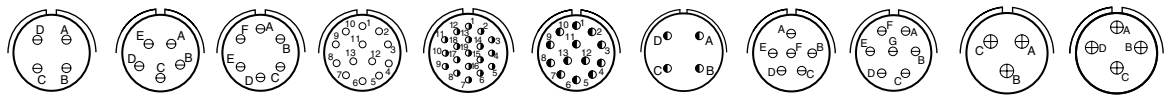

Shell Size & Insert Arrg. for:											
Series II JT	10-4	10-5		10-13		10-35		10-98	10-99	12-3	12-4
Series I LJT	11-4	11-5	11-6	11-13		11-35		11-98	11-99	13-3	13-4
Series III TV	11-4	11-5			11-19 HD	11-35	11-54	11-98	11-99		13-4
Service Rating	I	I	I	M	N	M	II	I	I	II	I
Number of Contacts	4	5	6	13	19	13	4	6	7	3	4
Contact Size	20	20	20	22M	23	22D	22D	20	20	16	16

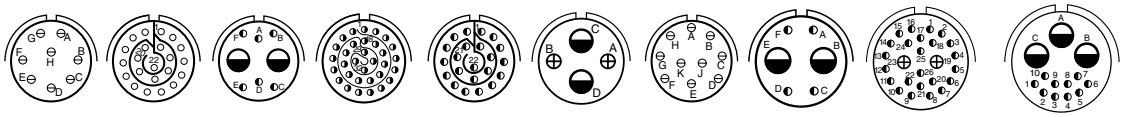

Shell Size & Insert Arrg. for:										
Series II JT	12-8	12-22			12-35		12-98			
Series I LJT	13-8	13-22			13-35		13-98			
Series III TV	13-8		13-26	13-32 HD	13-35	13-63	13-98	13-CB	15-AC	15-AT
Service Rating	I	M	M	N	M	I	I	M	M	I
Number of Contacts	8	22	6 2	32	22	2 2	10	4 2	24 2	10 3
Contact Size	20	22M	22D 12	23	22D	16 12	20	22D 12	22D 16	22D 12

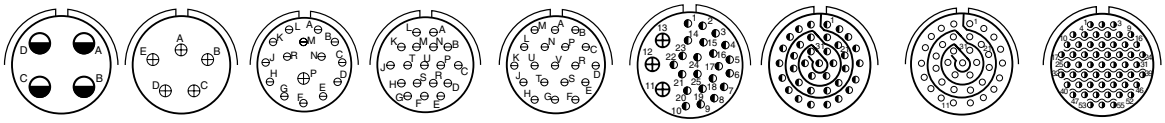

Shell Size & Insert Arrg. for:									
Series II JT	14-4	14-5	14-15	14-18	14-19		14-35	14-37	
Series I LJT	15-4	15-5	15-15	15-18	15-19		15-35	15-37	
Series III TV	15-4	15-5	15-15	15-18	15-19	15-25	15-35		15-55 HD
Service Rating	I	II	I	I	I	M	M	M	N
Number of Contacts	4	5	14 1	18	19	22 3	37	37	55
Contact Size	12	16	20 16	20	20	22D 16	22D	22M	23

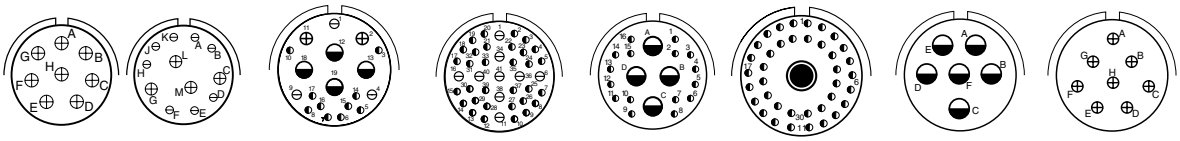

Shell Size & Insert Arrg. for:									
Series II JT	14-68	14-97						16-6	16-8
Series I LJT	15-68	15-97					17-2 | 17-3^	17-6	17-8
Series III TV	15-68	15-97	17-EA	17-EC	17-EG		17-2 | 17-3^	17-6	17-8
Service Rating	I	I	M	M	M		M	I	II
Number of Contacts	8	8 4	10 3 2 4	32 9	16 4		38 1	6	8
Contact Size	16	20 16	22D 20 16 12	22D 20	22D 12		22D 8 Twinax	12	16

HD: High Density HD38999 (use size 23 contacts only)
^ Supplied with D38999/62-A for Twinax, D38999/62-B for Coax

CONTACT LEGEND 8 10 12 16 20 22 22M 22D 23

MIL-DTL-38999, Series I LJT, II JT, III TV, HD

Insert Arrangements

Front face of pin inserts illustrated

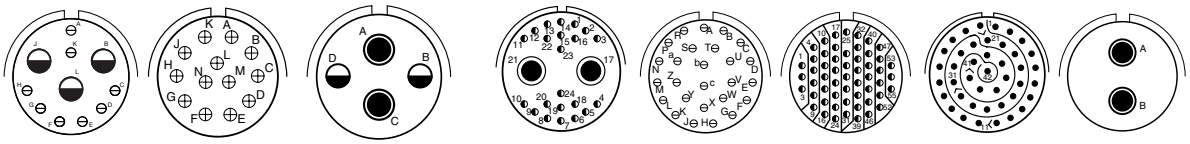

Shell Size & Insert Arrg. for:								
Series II JT		16-13			16-26	16-35	16-42	
Series I LJT		17-13	17-22	17-25	17-26	17-35	17-42	
Series III TV	17-11	17-13	17-22	17-25	17-26	17-35		17-52
Service Rating	N	I	Coax	M	I	M	M	M
Number of Contacts	1 | 2 | 8	13	2 2	22 2	26	55	42	2
Contact Size	12 | 12 | 20	16	12 Coax 8 Coax	22D 8 Coax	20	22D	22	8 Twinax
	Coax Twinax							

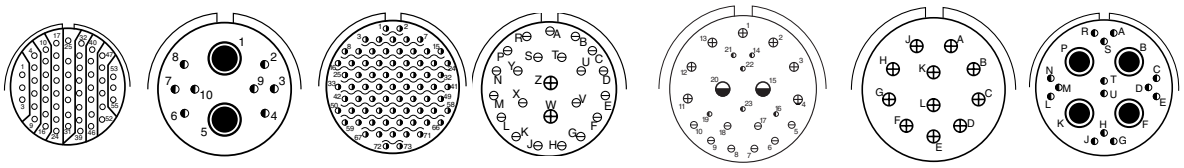

Shell Size & Insert Arrg. for:								
Series II JT	16-55			16-99		18-11		
Series I LJT	17-55			17-99		19-11	19-18 | 19-19^	
Series III TV		17-60	17-73 HD	17-99	19-FA	19-11	19-18 | 19-19^	
Service Rating	M	I/Coax	N	I	M	II	M	
Number of Contacts	55	8 2	73	21 2	6 8 7 2	11	14	4
Contact Size	22M	22D 8 Coax	23	20 16	22D 20 16 12	16	22D	8 Twinax

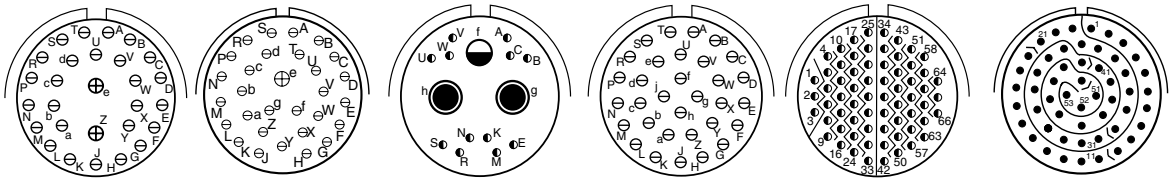

Shell Size & Insert Arrg. for:						
Series II JT	18-28	18-30		18-32	18-35	18-53
Series I LJT	19-28	19-30		19-32	19-35	19-53
Series III TV	19-28		19-31	19-32	19-35	
Service Rating	M	I	M	1	M	M
Number of Contacts	26 2	29 1	2 1 12	32	66	53
Contact Size	20 16	20 16	8 Coax 12 22D	20	22D	22

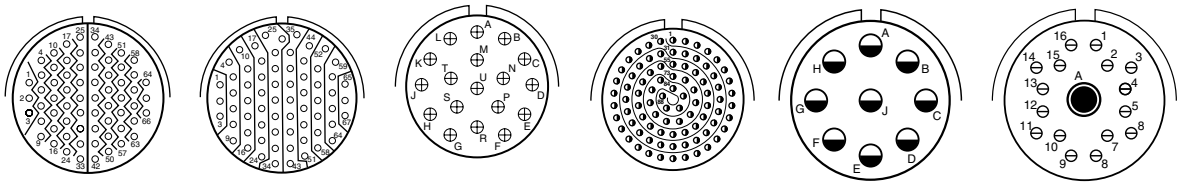

Shell Size & Insert Arrg. for:						
Series II JT	18-66		18-68		18-96	
Series I LJT	19-66	19-67	19-68			
Series III TV			19-68	19-88 HD		19-AD
Service Rating	M	M	I	N	I	Inst.
Number of Contacts	66	67	18	88	9	16 1
Contact Size	22M	22M	16	23	12	20 8 Twinax

CONTACT LEGEND 8 10 12 16 20 22 22M 22D 23

HD: High Density HD38999 (use size 23 contacts only)
^ Supplied with D38999/62-A for Twinax, D38999/62-B for Coax

Insert Arrangements

Front face of pin inserts illustrated

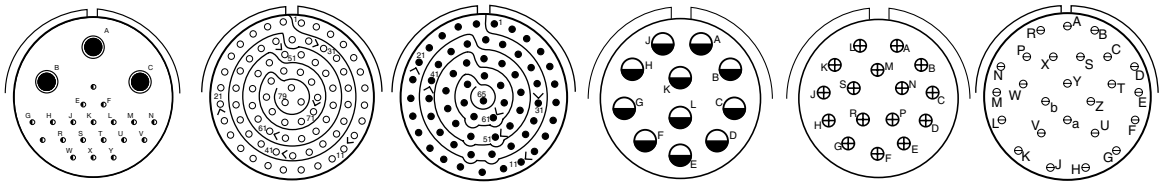

Shell Size & Insert Arrg. for:						
Series II JT		20-1	20-2	20-11	20-16	
Series I LJT		21-1	21-2	21-11	21-16	21-25
Series III TV	21-AZ			21-11	21-16	
Service Rating	M	M	II	I	II	I
Number of Contacts	3 | 19	79	65	11	16	25
Contact Size	8 | 22D	22M	22	12	16	20

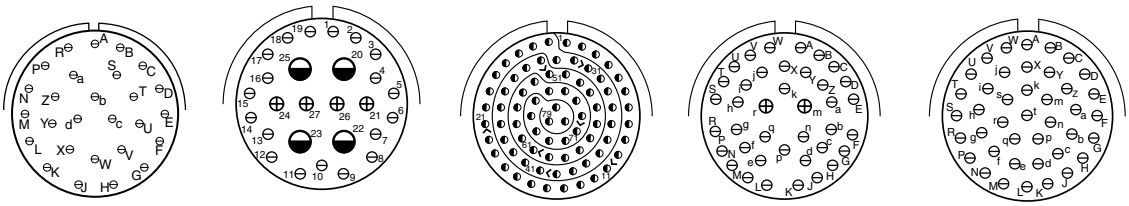

Shell Size & Insert Arrg. for:						
Series II JT			20-35	20-39	20-41
Series I LJT	21-27		21-35	21-39	21-41
Series III TV		21-29	21-35	21-39	21-41
Service Rating	I	I	M	1	I
Number of Contacts	27	19 | 4 | 4	79	37 | 2	41
Contact Size	20	20 | 16 | 12	22D	20 | 16	20

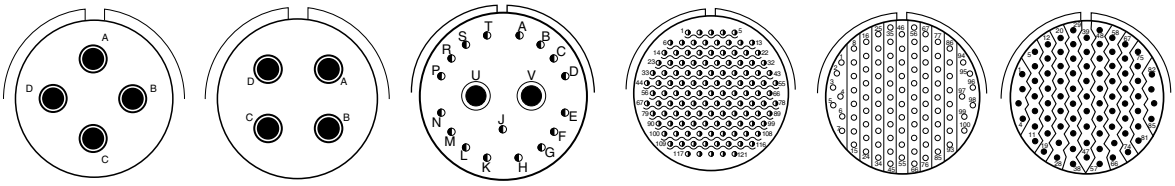

Shell Size & Insert Arrg. for:						
Series II JT					22-1	22-2
Series I LJT		21-75 | 21-76^	21-79		23-1	23-2
Series III TV	21-A48	21-75 | 21-76^	21-79	21-121 HD		
Service Rating	M	N	II	N	M	M
Number of Contacts	4	4	17 (See Note)	121	100	85
Contact Size	8 power	(See Note)	22D	23	22M	22

HD: High Density HD38999 (use size 23 contacts only)
Note: MS connector 21-75 is supplied with four size 8 twinax contacts.
Commercial connector 21-75 is supplied with four size 8 coax contacts.
MS connector 21-79 has provision for two size 8 coax contacts.
Coax contacts are not supplied unless specified by customers.
^ Supplied with D38999/62-A for Twinax, D38999/62-B for Coax

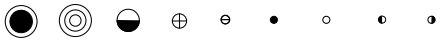

CONTACT LEGEND 8 10 12 16 20 22 22M 22D 23

MIL-DTL-38999, Series I LJT, II JT, III TV, HD

Insert Arrangements

Front face of pin inserts illustrated

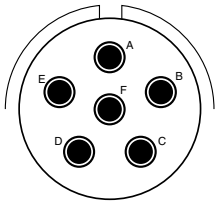
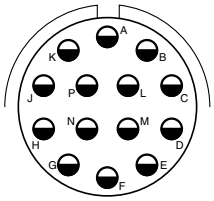
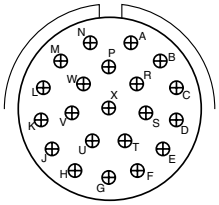
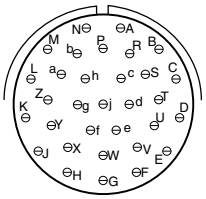
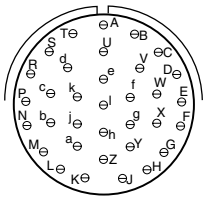

Shell Size & Insert Arrg. for:					
Series II JT		22-14	22-21	22-32	
Series I LJT	23-6	23-14	23-21	23-32	23-34
Series III TV	23-6	23-14	23-21		
Service Rating	M	I	II	I	I
Number of Contacts	6	14	21	32	34
Contact Size	8 Twinax	12	16	20	20

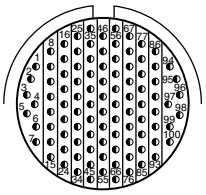
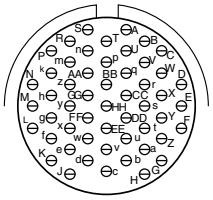
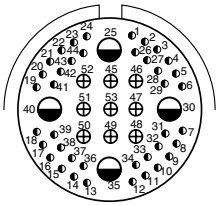
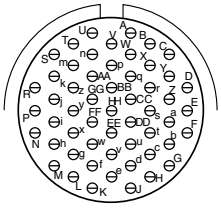
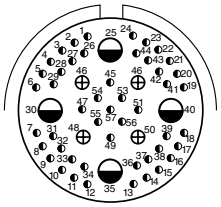

Shell Size & Insert Arrg. for:								
Series II JT	22-35	22-53			22-55			
Series I LJT	23-35	23-53			23-55			
Series III TV	23-35	23-53	23-54		23-55	23-63		
Service Rating	M	I	M		I	M		
Number of Contacts	100	53	40	9	55	49	4	4
Contact Size	22D	20	22D	16	20	22D	16 Coax	12 Coax

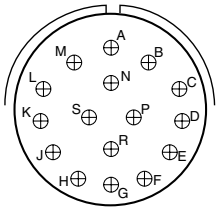
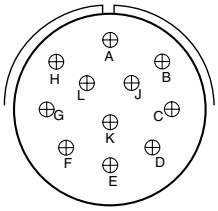
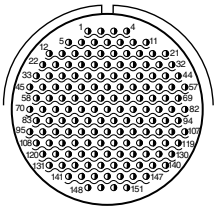
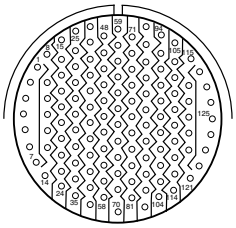
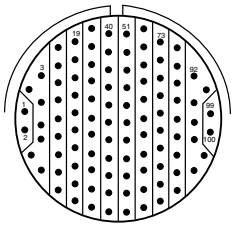

Shell Size & Insert Arrg. for:					
Series II JT				24-1	24-2
Series I LJT	23-97	23-99		25-1	25-2
Series III TV			23-151 HD		
Service Rating	II	II	N	M	M
Number of Contacts	16	11	151	128	100
Contact Size	16	16	23	22M	22

CONTACT LEGEND	8	10	12	16	20	22	22M	22D	23

HD: High Density HD38999 (use size 23 contacts only)
^ Supplied with D38999/62-A for Twinax, D38999/62-B for Coax

MIL-DTL-38999, Series I LJT, II JT, III TV

Insert Arrangements

Amphenol Aerospace

Front face of pin inserts illustrated

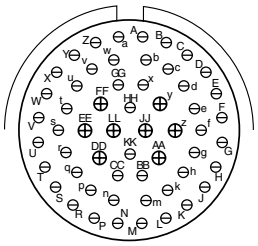
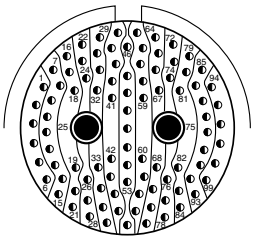
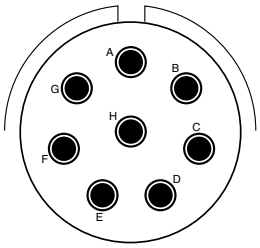
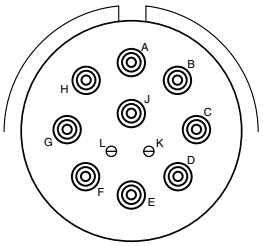

Shell Size & Insert Arrg. for:							
Series II JT	24-4						
Series I LJT	25-4		25-7 | 25-9^			25-11	
Series III TV	25-4		25-7 | 25-9^		25-8 | 25-10^ | 25-88	25-11***	
Service Rating	I		M		Twinax / Coax	N	
Number of Contacts	48	8	97	2	8	2	9
Contact Size	20	16	22D	8 Twinax	8 Twinax / 8 Coax (88)	20	10

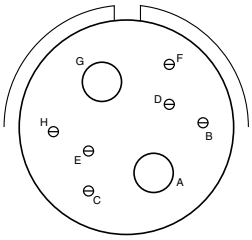
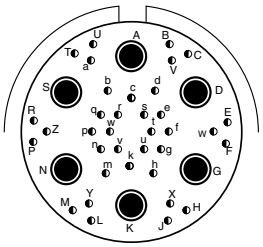
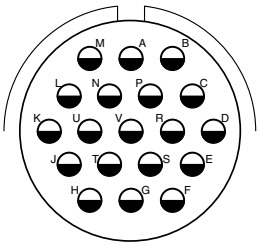
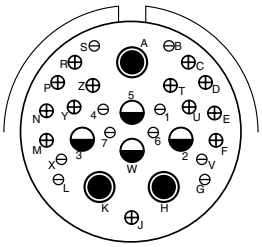

Shell Size & Insert Arrg. for:								
Series II JT					24-19			
Series I LJT					25-19	25-20 | 25-21^		
Series III TV	25-16		25-17		25-19	*** 25-20 | 25-21^		
Service Rating	M		M		I	N		
Number of Contacts	6	2	36	6	19	10	13	3	4
Contact Size	20	4	22D	8 Twinax	12	20	16	8 Twinax	12 Coax
						(With Matched Impedance)			

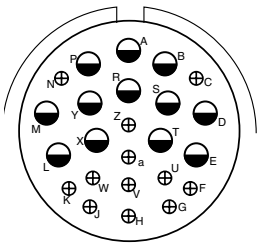
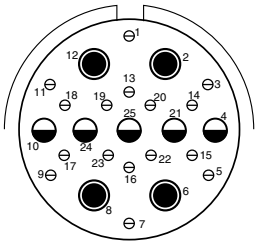
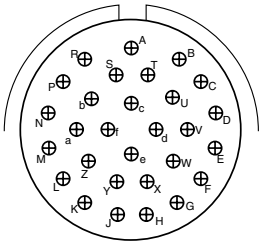
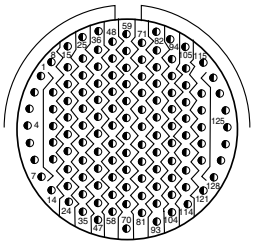

Shell Size & Insert Arrg. for:								
Series II JT	24-24					24-29	24-35	
Series I LJT	25-24					25-29	25-35	
Series III TV	25-24		25-26			25-29	25-35	
Service Rating	I		I			I	M	
Number of Contacts	12	12	16	5	4	29	128	
Contact Size	16	12	20	12	8 Coax	16	22D	

*** For use in MIL-STD-1760 applications (see pages 76 and 77).
HD: High Density HD38999 (use size 23 contacts only)
^ Supplied with D38999/62-A for Twinax, D38999/62-B for Coax

CONTACT LEGEND	8	10	12	16	20	22	22M	22D	23

MIL-DTL-38999, Series I LJT, II JT, III TV, HD

Insert Arrangements

Front face of pin inserts illustrated

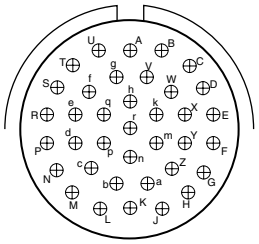
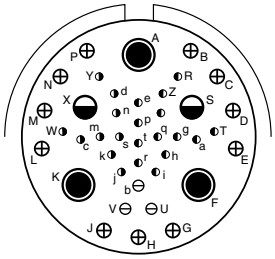
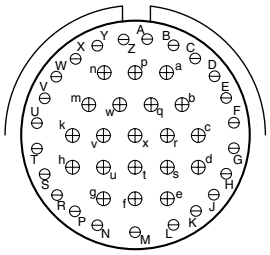

Shell Size & Insert Arrg. for:								
Series II JT	24-37						24-43	
Series I LJT	25-37						25-43	
Series III TV	25-37	25-41					25-43	
Service Rating	I	N/Inst.					I	
Number of Contacts	37	22	3	11	2	3	23	20
Contact Size	16	22D	20	16	12 Coax	8 Twinax	20	16

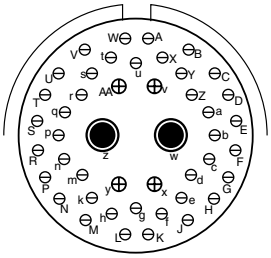
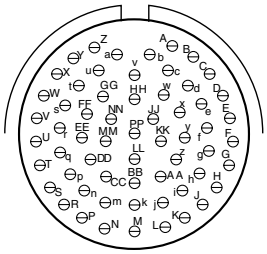
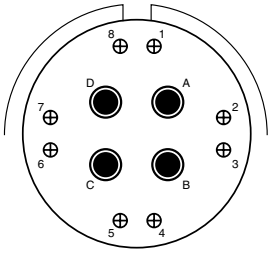
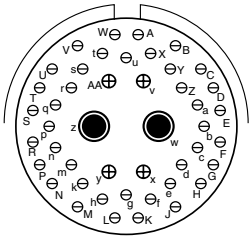

Shell Size & Insert Arrg. for:									
Series II JT				24-61					
Series I LJT	25-46 | 25-47^			25-61					
Series III TV	25-46 | 25-47^			25-61	25-62		25-90 | 25-91^		
Service Rating	I			I	I		I		
Number of Contacts	40	4	2	61	8	4	40	4	2
Contact Size	20	16	8 Coax †	20	16	8	20	16	8 Twinax
					Ground Plane Only				

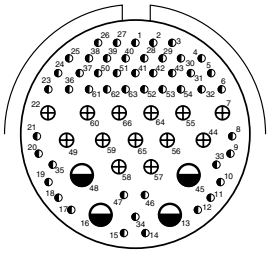
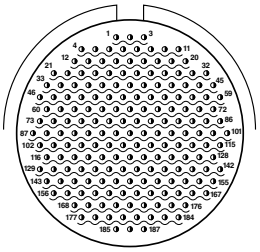
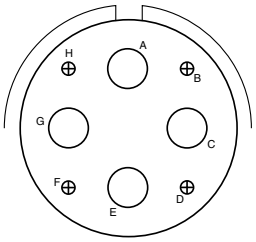
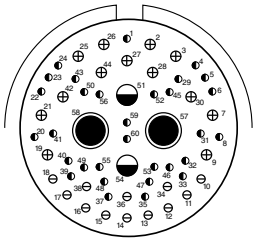

Shell Size & Insert Arrg. for:										
Series II JT										
Series I LJT										
Series III TV	25-F4			25-187 HD	25-1A		25-AT			
Service Rating	Size 22D=M, Balance =I			N	N		N			
Number of Contacts	49	13	4	187	4	4	2	2	13	12	31
Contact Size	22D	16	12	23	16	4	10	12	16S	20	22D

CONTACT LEGEND 8 10 12 16 20 22 22M 22D 23

† Coax contacts for RG180/U or RG195/U cable.

HD: High Density HD38999 (use size 23 contacts only)

^ Supplied with D38999/62-A for Twinax, D38999/62-B for Coax

Special Insert Arrangements

Front face of pin inserts illustrated

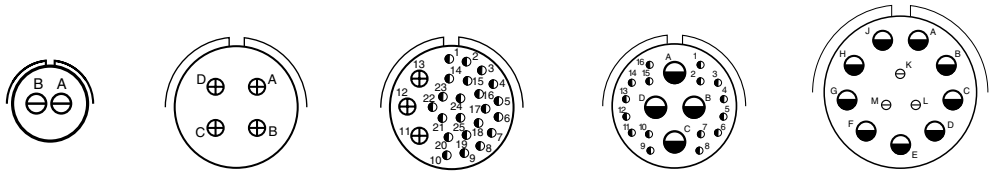

Shell Size & Insert Arrg. for:										
Series III TV	**9-2**	**15-4***	**15-25**		**17-20**		**21-12**	
Service Rating	I	II	M		M		I	
Number of Contacts	2	4	22	3	16	4	3	9
Contact Size	20	16	22D	16	22D	12	20	12

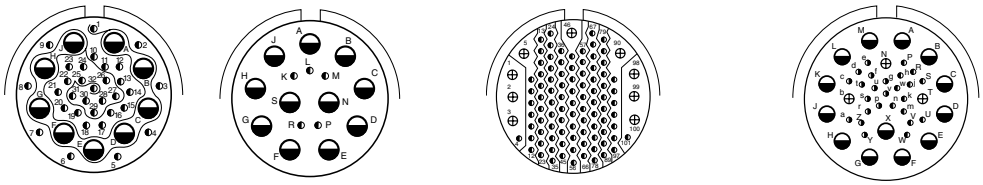

Shell Size & Insert Arrg. for:									
Series III TV	**21-21**		**21-99**		**25-92**		**25-97**		
Service Rating	M/Inst.		M		M		M		
Number of Contacts	32	9	5	11	92	9	26	3	13
Contact Size	22D	12	22D	12	22D	16	22D	16	12

Tracer Power/Signal Arrangements-Direct Current (VDC) With and Without Ground

Available now with Amphenol's **Tracer Rapid Prototyping Insert Technology**, contact **tracer@amphenol-aao.com**
Contact factory for lead time on standard D38999 insert technology.

TRACER
Rapid Prototyping

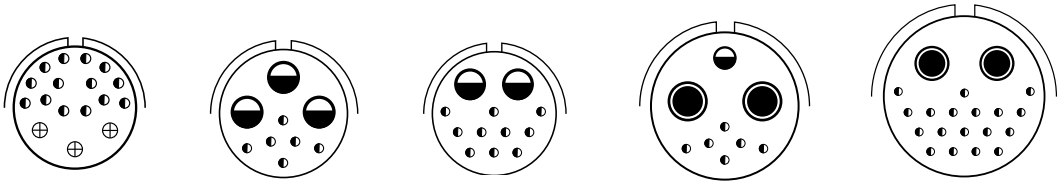

Shell Size & Insert Arrg. for:											
Series III TV	**13-AX**		**15-AX**		**15-AZ**		**17-AZ**			**19-AX**	
Service Rating	M		II		II		II			II	
Number of Contacts	3	14	3	6	2	10	2	1	6	2	18
Contact Size	16	22D	12	22D	12	22D	8	12	22D	8	22D

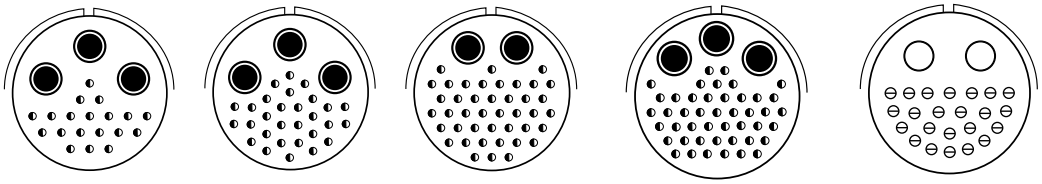

Shell Size & Insert Arrg. for:										
Series III TV	**21-AZ**		**23-AZ**		**23-AX**		**25-AX**		**25-22**	
Service Rating	II		II		II		II		M	
Number of Contacts	3	19	3	29	2	42	3	46	2	23
Contact Size	8	22D	8	22D	8	22D	8	22D	4	20

CONTACT LEGEND	4	8	10	12	16	20	22	22M	22D	23*

MIL-DTL-38999, Series III TV

Special Insert Arrangements

Non-Standard Shells or Large Contacts

Front face of pin inserts illustrated

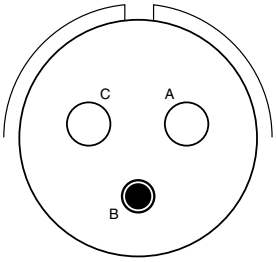

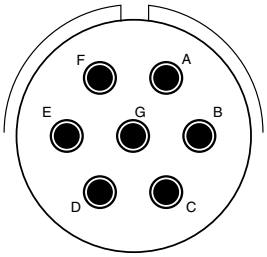

Shell Size & Insert Arrg. for:

Series III TV	25L-3		25L-7
Service Rating	II		II
Number of Contacts	1	2	7
Contact Size	8	4	8

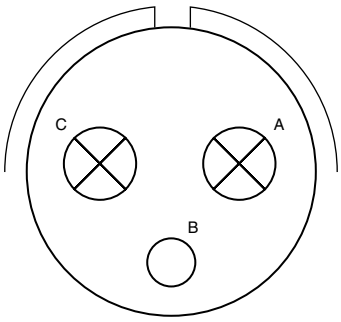

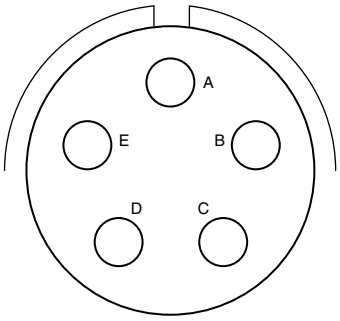

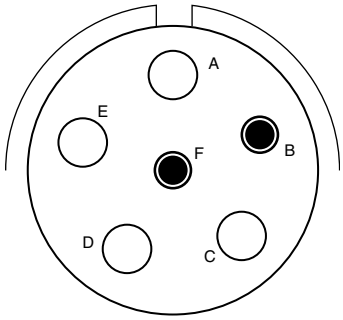

Shell Size & Insert Arrg. for:

Series III TV	33-3		33-5	33-6	
Service Rating	II		II	II	
Number of Contacts	1	2	5	2	4
Contact Size	4	0	4	8	4

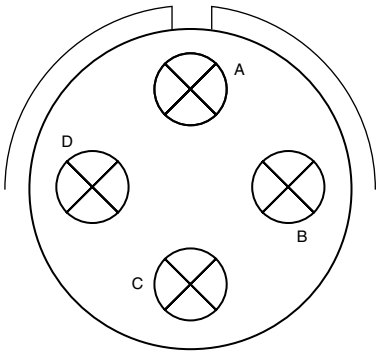

Shell Size & Insert Arrg. for:

Series III TV	37-5
Service Rating	II
Number of Contacts	4
Contact Size	0

NOTE: Some specials shown here were formerly known as Pyle arrangements. Consult Amphenol for how to order information for connectors with these inserts.
Consult Amphenol Aerospace for longer shell drawings.

CONTACT LEGEND

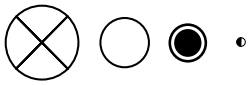

0 4 8 22D

Amphenol Aerospace

Insert Arrangements

INSERT ARRANGEMENT #8-3 / 9-3

Connector Type:	JT MIL-DTL-38999 Series II	LJT MIL-DTL-38999 Series I	Tri-Start MIL-DTL-38999 Series III	Number of Contacts	Contact Size	Service Rating
Insert Designation:	8-3	9-3	NA	3	20	M

Contact Locations
Front face of pin insert shown

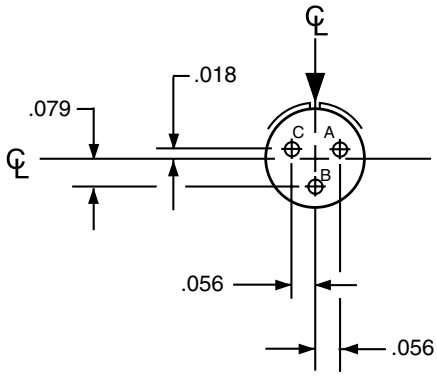

*Service Rating: M for MIL-DTL-38999

INSERT ARRANGEMENT #8-35 / 9-35

Connector Type:	JT MIL-DTL-38999 Series II	LJT MIL-DTL-38999 Series I	Tri-Start MIL-DTL-38999 Series III	Number of Contacts	Contact Size	Service Rating
Insert Designation:	8-35	9-35	9-35	6	22D	M

Contact Locations
Front face of pin insert shown

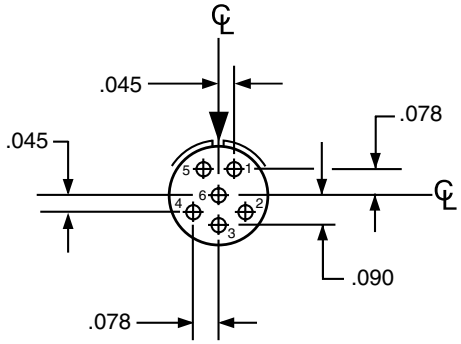

All dimensions for reference only. For alternate rotations see page 47 for Series III, page 87 for Series II, and page 115 for Series I.
Note: Shown in this catalog are the most common insert patterns for PCB applications. For availability of other arrangements, consult Amphenol Aerospace.

PCB Contacts 38999, Series I LJT, II JT, III TV

Insert Arrangements

INSERT ARRANGEMENT #8-98 / 9-98

Connector Type:	JT MIL-DTL-38999 Series II	LJT MIL-DTL-38999 Series I	Tri-Start MIL-DTL-38999 Series III	Number of Contacts	Contact Size	Service Rating
Insert Designation:	8-98	9-98	9-98	3	20	I

Contact Locations

Front face of pin insert shown

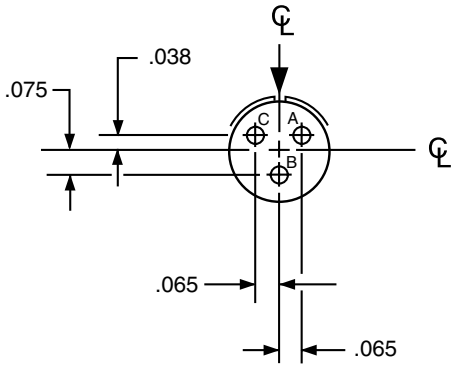

INSERT ARRANGEMENT #10-5 / 11-5

Connector Type:	JT MIL-DTL-38999 Series II	LJT MIL-DTL-38999 Series I	Tri-Start MIL-DTL-38999 Series III	Number of Contacts	Contact Size	Service Rating
Insert Designation:	10-5	11-5	11-5	5	20	I

Contact Locations

Front face of pin insert shown

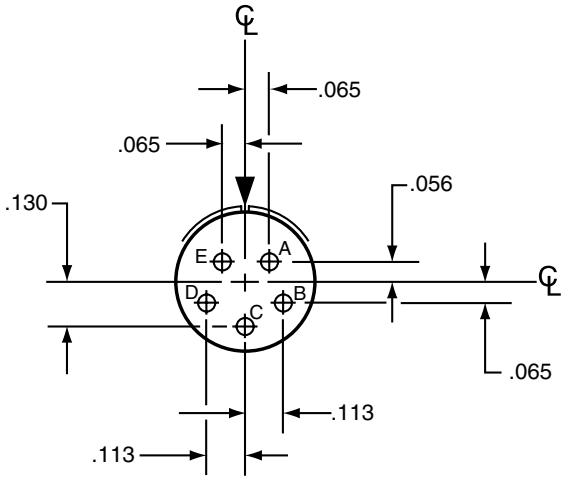

All dimensions for reference only. For alternate rotations see page 47 for Series III, page 87 for Series II, and page 115 for Series I.
Note: Shown in this catalog are the most common insert patterns for PCB applications. For availability of other arrangements, consult Amphenol Aerospace.

PCB Contacts 38999, Series I LJT, II JT, III TV

Insert Arrangements

INSERT ARRANGEMENT #10-6 / 11-6

Connector Type:	JT MIL-DTL-38999 Series II	LJT MIL-DTL-38999 Series I	Tri-Start MIL-DTL-38999 Series III	Number of Contacts	Contact Size	Service Rating
Insert Designation:	NA	11-6	NA	6	20	I

Contact Locations
Front face of pin insert shown

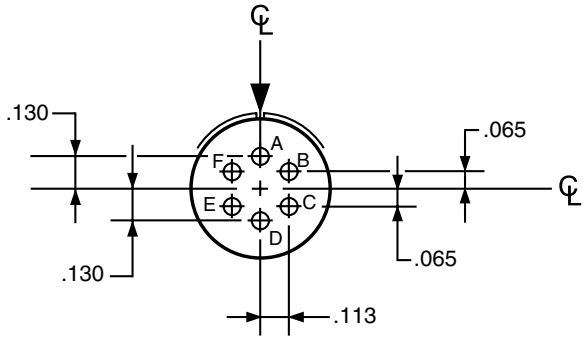

INSERT ARRANGEMENT #10-35 / 11-35

Connector Type:	JT MIL-DTL-38999 Series II	LJT MIL-DTL-38999 Series I	Tri-Start MIL-DTL-38999 Series III	Number of Contacts	Contact Size	Service Rating
Insert Designation:	10-35	11-35	11-35	13	22D	M

Contact Locations
Front face of pin insert shown

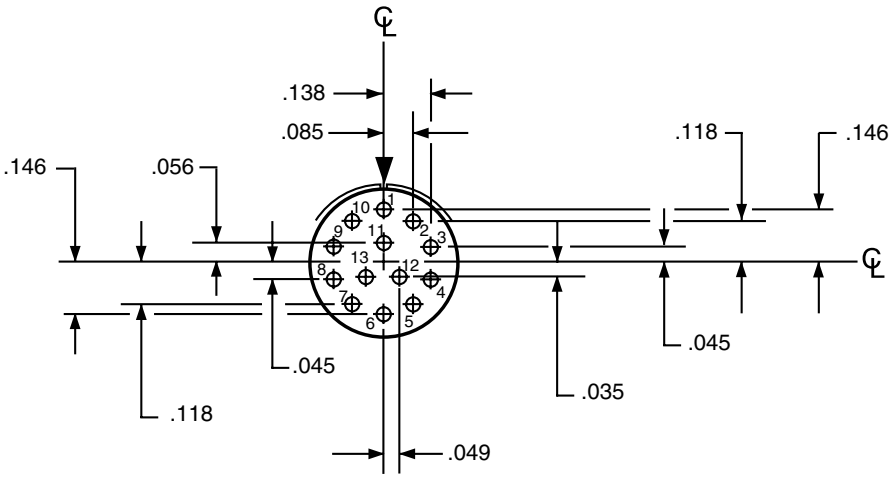

All dimensions for reference only. For alternate rotations see page 47 for Series III, page 87 for Series II, and page 115 for Series I.
Note: Shown in this catalog are the most common insert patterns for PCB applications. For availability of other arrangements, consult Amphenol Aerospace.

PCB Contacts 38999, Series I LJT, II JT, III TV

Insert Arrangements

INSERT ARRANGEMENT #12-3 / 13-3

Connector Type:	JT MIL-DTL-38999 Series II	LJT MIL-DTL-38999 Series I	Tri-Start MIL-DTL-38999 Series III
Insert Designation:	12-3	13-3	NA

Number of Contacts	Contact Size	Service Rating
3	16	II

Contact Locations

Front face of pin insert shown

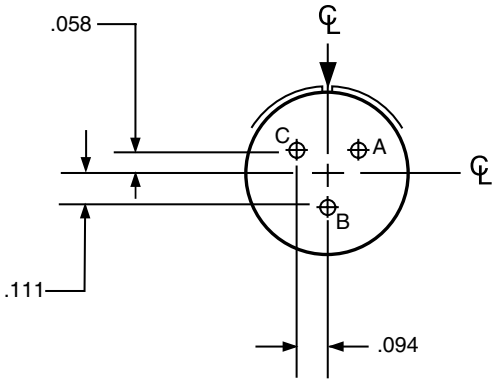

INSERT ARRANGEMENT #12-35 / 13-35

Connector Type:	JT MIL-DTL-38999 Series II	LJT MIL-DTL-38999 Series I	Tri-Start MIL-DTL-38999 Series III
Insert Designation:	12-35	13-35	13-35

Number of Contacts	Contact Size	Service Rating
22	22D	M

Contact Locations

Front face of pin insert shown

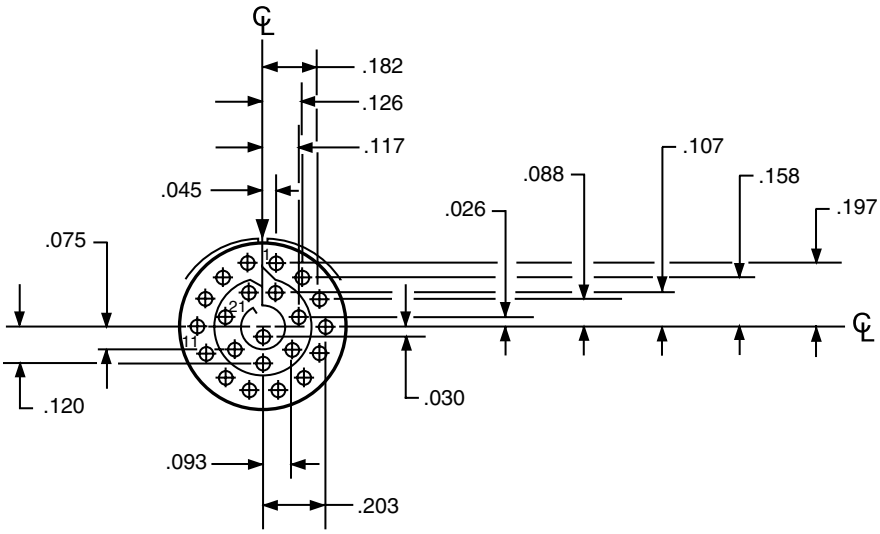

All dimensions for reference only. For alternate rotations see page 47 for Series III, page 87 for Series II, and page 115 for Series I.
Note: Shown in this catalog are the most common insert patterns for PCB applications. For availability of other arrangements, consult Amphenol Aerospace.

PCB Contacts 38999, Series I LJT, II JT, III TV

Insert Arrangements

INSERT ARRANGEMENT #14-18 / 15-18

Connector Type:	JT MIL-DTL-38999 Series II	LJT MIL-DTL-38999 Series I	Tri-Start MIL-DTL-38999 Series III	Number of Contacts	Contact Size	Service Rating
Insert Designation:	14-18	15-18	15-18	18	20	I

Contact Locations

Front face of pin insert shown

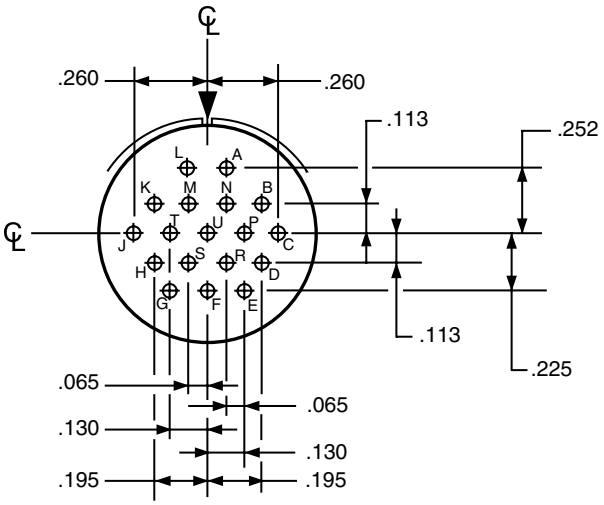

INSERT ARRANGEMENT #14-19 / 15-19

Connector Type:	JT MIL-DTL-38999 Series II	LJT MIL-DTL-38999 Series I	Tri-Start MIL-DTL-38999 Series III	Number of Contacts	Contact Size	Service Rating
Insert Designation:	14-19	15-19	15-19	19	20	I

Contact Locations

Front face of pin insert shown

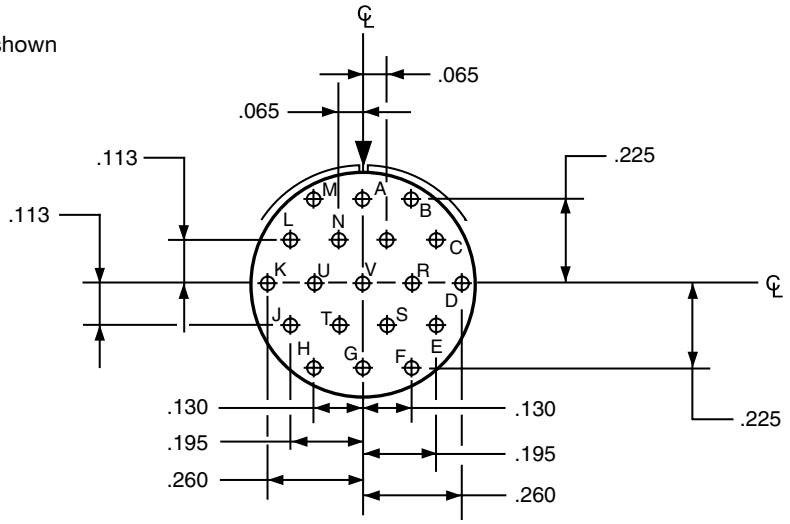

All dimensions for reference only. For alternate rotations see page 47 for Series III, page 87 for Series II, and page 115 for Series I.
Note: Shown in this catalog are the most common insert patterns for PCB applications. For availability of other arrangements, consult Amphenol Aerospace.

PCB Contacts 38999, Series I LJT, II JT, III TV

Insert Arrangements

INSERT ARRANGEMENT #14-35 / 15-35

Connector Type:	JT MIL-DTL-38999 Series II	LJT MIL-DTL-38999 Series I	Tri-Start MIL-DTL-38999 Series III
Insert Designation:	14-35	15-35	15-35

Number of Contacts	Contact Size	Service Rating
37	22D	M

Contact Locations
Front face of pin insert shown

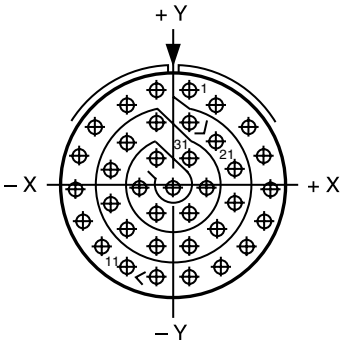

Contact Hole Locations		
Contact Number	Location X Axis	Location Y Axis
1	+.045	+.262
2	+.123	+.217
3	+.211	+.160
4	+.254	+.080
5	+.266	–.010
6	+.247	–.098
7	+.200	–.175
8	+.130	–.232
9	+.045	–.262
10	–.045	–.262
11	–.130	–.232
12	–.200	–.175
13	–.247	–.098
14	–.266	–.010
15	–.254	+.080
16	–.211	+.160
17	–.123	+.217
18	–.045	+.262

Contact Hole Locations		
Contact Number	Location X Axis	Location Y Axis
19	+.045	+.172
20	+.123	+.119
21	+.170	+.040
22	+.170	–.050
23	+.123	–.127
24	+.045	–.172
25	–.045	–.172
26	–.123	–.127
27	–.170	–.050
28	–.170	+.040
29	–.123	+.119
30	–.045	+.172
31	+.045	+.074
32	+.090	–.004
33	+.045	–.082
34	–.045	–.082
35	–.090	–.004
36	–.045	+.074
37	.000	–.004

INSERT ARRANGEMENT #16-26 / 17-26

Connector Type:	JT MIL-DTL-38999 Series II	LJT MIL-DTL-38999 Series I	Tri-Start MIL-DTL-38999 Series III
Insert Designation:	NA	17-26	17-26

Number of Contacts	Contact Size	Service Rating
26	20	I

Contact Locations
Front face of pin insert shown

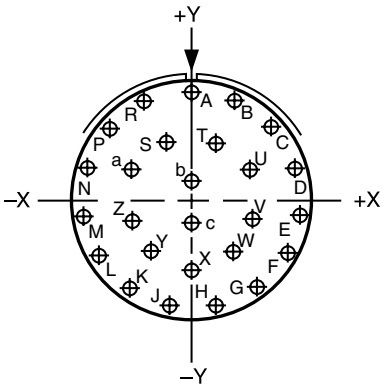

Contact Hole Locations		
Contact Number	Location X Axis	Location Y Axis
A	.000	+.321
B	+.131	+.293
C	+.239	+.214
D	+.305	+.099
E	+.319	–.034
F	+.278	–.161
G	+.189	–.260
H	+.067	–.314
J	–.067	–.314
K	–.189	–.260
L	–.278	–.161
M	–.319	–.034
N	–.305	+.099
P	–.239	+.214

Contact Hole Locations		
Contact Number	Location X Axis	Location Y Axis
R	–.131	+.293
S	–.070	+.177
T	+.070	+.177
U	+.175	+.094
V	+.178	–.036
W	+.119	–.151
X	.000	–.203
Y	–.119	–.151
Z	–.178	–.036
a	–.175	+.094
b	.000	+.065
c	.000	–.065

All dimensions for reference only. For alternate rotations see page 47 for Series III, page 87 for Series II, and page 115 for Series I.
Note: Shown in this catalog are the most common insert patterns for PCB applications. For availability of other arrangements, consult Amphenol Aerospace.

Amphenol Aerospace

INSERT ARRANGEMENT #16-35 / 17-35

Connector Type:	JT MIL-DTL-38999 Series II	LJT MIL-DTL-38999 Series I	Tri-Start MIL-DTL-38999 Series III
Insert Designation:	16-35	17-35	17-35

Number of Contacts	Contact Size	Service Rating
55	22D	M

Contact Locations
Front face of pin insert shown

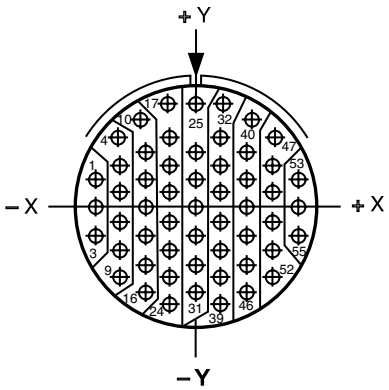

Contact Hole Locations		
Contact Number	Location X Axis	Location Y Axis
1	–.312	+.086
2	–.312	–.004
3	–.312	–.094
4	–.242	+.221
5	–.234	+.131
6	–.234	+.041
7	–.234	–.049
8	–.234	–.139
9	–.234	–.229
10	–.172	+.279
11	–.156	+.176
12	–.156	+.086
13	–.156	–.004
14	–.156	–.094
15	–.156	–.184
16	–.156	–.274
17	–.089	+.316
18	–.078	+.221
19	–.078	+.131
20	–.078	+.041
21	–.078	–.049
22	–.078	–.139
23	–.078	–.229
24	–.078	–.319
25	.000	+.329
26	.000	+.176
27	.000	+.086

Contact Hole Locations		
Contact Number	Location X Axis	Location Y Axis
28	.000	–.004
29	.000	–.094
30	.000	–.184
31	.000	–.274
32	+.089	+.316
33	+.078	+.221
34	+.078	+.131
35	+.078	+.041
36	+.078	–.049
37	+.078	–.139
38	+.078	–.229
39	+.078	–.319
40	+.172	+.279
41	+.156	+.176
42	+.156	+.086
43	+.156	–.004
44	+.156	–.094
45	+.156	–.184
46	+.156	–.274
47	+.242	+.221
48	+.234	+.131
49	+.234	+.041
50	+.234	–.049
51	+.234	–.139
52	+.234	–.229
53	+.312	+.086
54	+.312	–.004
55	+.312	–.094

All dimensions for reference only. For alternate rotations see page 47 for Series III, page 87 for Series II, and page 115 for Series I.
Note: Shown in this catalog are the most common insert patterns for PCB applications. For availability of other arrangements, consult Amphenol Aerospace.

PCB Contacts 38999, Series I LJT, II JT, III TV

Insert Arrangements

INSERT ARRANGEMENT #18-11 / 19-11

Connector Type:	JT MIL-DTL-38999 Series II	LJT MIL-DTL-38999 Series I
Insert Designation:	18-11	19-11

Number of Contacts	Contact Size	Service Rating
11	16	II

Contact Locations
Front face of pin insert shown

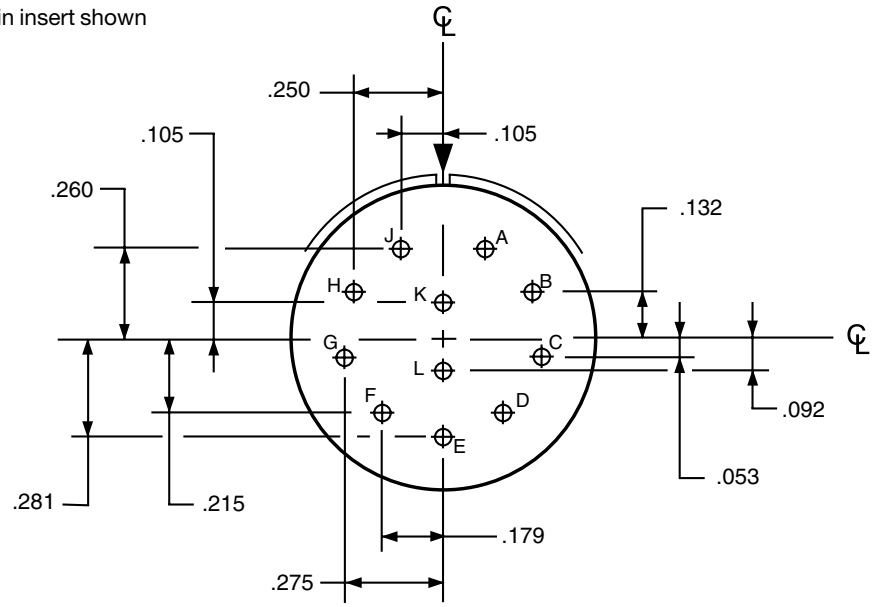

INSERT ARRANGEMENT #18-32 / 19-32

Connector Type:	JT MIL-DTL-38999 Series II	LJT MIL-DTL-38999 Series I	Tri-Start MIL-DTL-38999 Series III
Insert Designation:	18-32	19-32	19-32

Number of Contacts	Contact Size	Service Rating
32	20	I

Contact Locations
Front face of pin insert shown

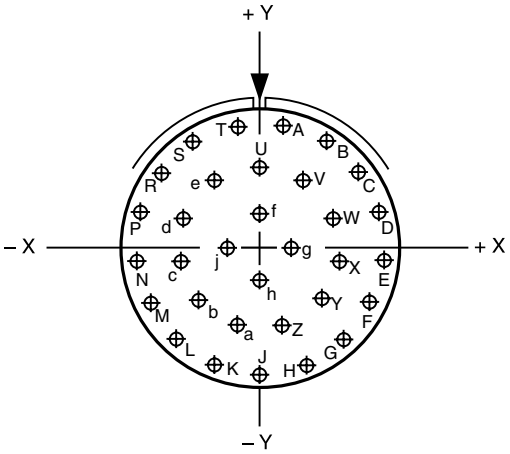

Contact Hole Locations		
Contact Letter	Location X Axis	Location Y Axis
A	+.066	+.353
B	+.189	+.305
C	+.286	+.217
D	+.345	+.098
E	+.357	–.033
F	+.321	–.160
G	+.242	–.265
H	+.130	–.335
J	.000	–.359
K	–.130	–.335
L	–.242	–.265
M	–.321	–.160
N	–.357	–.033
P	–.345	+.098
R	–.286	+.217
S	–.189	+.305

Contact Hole Locations		
Contact Letter	Location X Axis	Location Y Axis
T	–.066	+.353
U	.000	+.230
V	+.124	+.193
W	+.209	+.095
X	+.228	–.033
Y	+.174	–.151
Z	+.065	–.221
a	–.065	–.221
b	–.174	–.151
c	–.228	–.033
d	–.209	+.095
e	–.124	+.193
f	.000	+.096
g	+.096	.000
h	.000	–.096
j	–.096	.000

All dimensions for reference only. For alternate rotations see page 47 for Series III, page 87 for Series II, and page 115 for Series I.
Note: Shown in this catalog are the most common insert patterns for PCB applications. For availability of other arrangements, consult Amphenol Aerospace.

PCB Contacts 38999, Series I LJT, II JT, III TV

Insert Arrangements

INSERT ARRANGEMENT #18-35 / 19-35

Connector Type:	JT MIL-DTL-38999 Series II	LJT MIL-DTL-38999 Series I	Tri-Start MIL-DTL-38999 Series III
Insert Designation:	18-35	19-35	19-35

Number of Contacts	Contact Size	Service Rating
66	22D	M

Contact Locations
Front face of pin insert shown

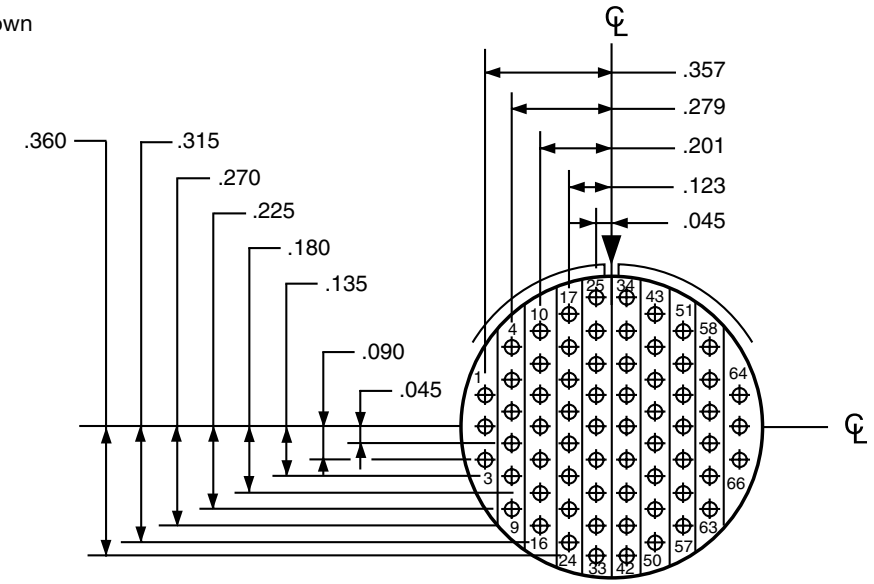

INSERT ARRANGEMENT #20-27 / 21-27

Connector Type:	JT MIL-DTL-38999 Series II	LJT MIL-DTL-38999 Series I	Tri-Start MIL-DTL-38999 Series III
Insert Designation:	20-27	21-27	NA

Number of Contacts	Contact Size	Service Rating
27	20	I

Contact Locations
Front face of pin insert shown

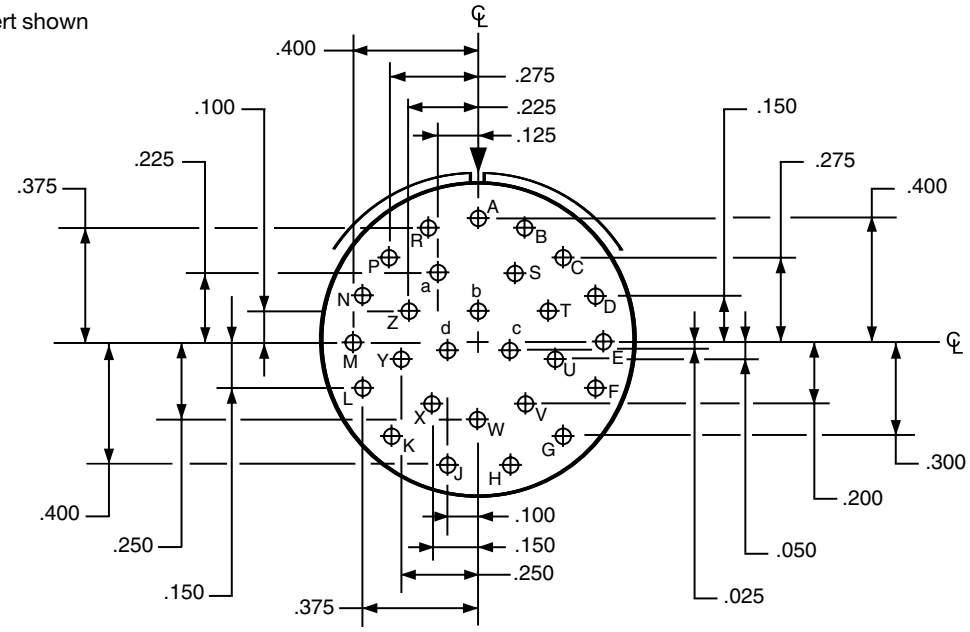

All dimensions for reference only. For alternate rotations see page 47 for Series III, page 87 for Series II, and page 115 for Series I.
Note: Shown in this catalog are the most common insert patterns for PCB applications. For availability of other arrangements, consult Amphenol Aerospace.

PCB Contacts 38999, Series I LJT, II JT, III TV

Insert Arrangements

INSERT ARRANGEMENT #20-35 / 21-35

Connector Type:	JT MIL-DTL-38999 Series II	LJT MIL-DTL-38999 Series I	Tri-Start MIL-DTL-38999 Series III
Insert Designation:	20-35	21-35	21-35

Number of Contacts	Contact Size	Service Rating
79	22D	M

Contact Locations
Front face of pin insert shown

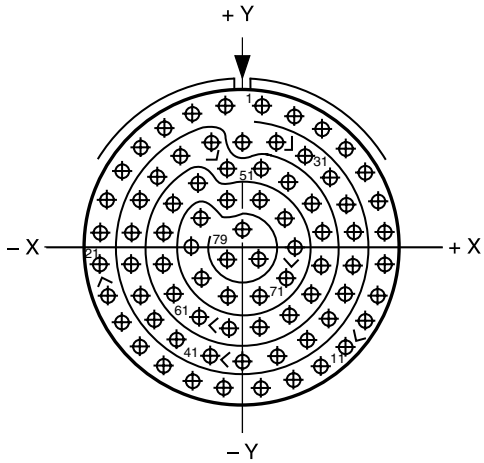

Contact Hole Locations		
Contact Number	Location X Axis	Location Y Axis
1	+.053	+.426
2	+.146	+.404
3	+.232	+.362
4	+.306	+.302
5	+.365	+.227
6	+.406	+.141
7	+.427	+.048
8	+.427	–.048

Contact Hole Locations		
Contact Number	Location X Axis	Location Y Axis
9	+.406	–.141
10	+.365	–.227
11	+.306	–.302
12	+.232	–.362
13	+.146	–.404
14	+.053	–.426
15	–.053	–.426
16	–.146	–.404
17	–.232	–.362
18	–.306	–.302
19	–.365	–.227
20	–.406	–.141
21	–.427	–.048
22	–.427	+.048
23	–.406	+.141
24	–.365	+.227
25	–.306	+.302
26	–.232	+.362
27	–.146	+.404
28	–.053	+.426
29	.000	+.323
30	+.098	+.322
31	+.184	+.280
32	+.258	+.220
33	+.311	+.141
34	+.332	+.048
35	+.332	–.048
36	+.311	–.141
37	+.258	–.220
38	+.184	–.280
39	+.098	–.322
40	.000	–.347
41	–.098	–.322
42	–.184	–.280

Contact Hole Locations		
Contact Number	Location X Axis	Location Y Axis
43	–.258	–.220
44	–.311	–.141
45	–.332	–.048
46	–.332	+.048
47	–.311	+.141
48	–.258	+.220
49	–.184	+.280
50	–.098	+.322
51	–.048	+.241
52	+.048	+.241
53	+.134	+.199
54	+.208	+.139
55	+.237	+.048
56	+.237	–.048
57	+.208	–.139
58	+.134	–.199
59	+.048	–.241
60	–.048	–.241
61	–.134	–.199
62	–.208	–.139
63	–.237	–.048
64	–.237	+.048
65	–.208	+.139
66	–.134	+.199
67	–.048	+.146
68	+.048	+.146
69	+.125	+.090
70	+.155	.000
71	+.125	–.090
72	+.048	–.146
73	–.048	–.146
74	–.125	–.090
75	–.155	.000
76	–.125	+.090
77	.000	+.053
78	+.048	–.029
79	–.048	–.029

All dimensions for reference only. For alternate rotations see page 47 for Series III, page 87 for Series II, and page 115 for Series I.
Note: Shown in this catalog are the most common insert patterns for PCB applications. For availability of other arrangements, consult Amphenol Aerospace.

Insert Arrangements

INSERT ARRANGEMENT #20-41 / 21-41

Connector Type:	JT MIL-DTL-38999 Series II	LJT MIL-DTL-38999 Series I	Tri-Start MIL-DTL-38999 Series III
Insert Designation:	20-41	21-41	21-41

Number of Contacts	Contact Size	Service Rating
41	20	I

Contact Locations
Front face of pin insert shown

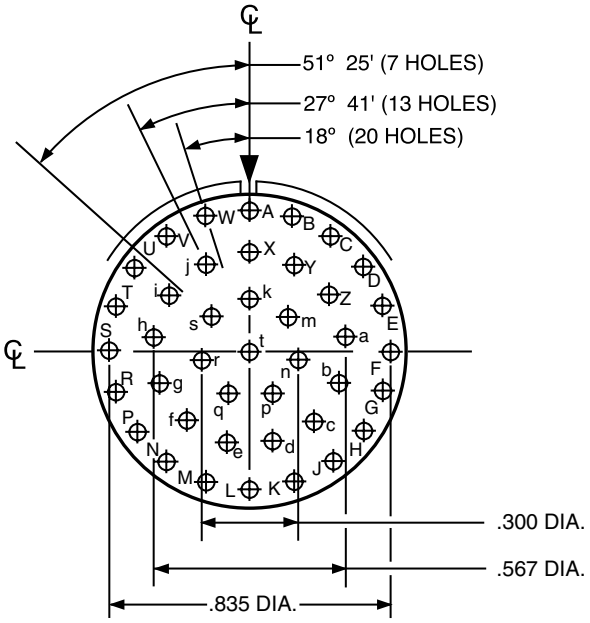

All dimensions for reference only. For alternate rotations see page 47 for Series III, page 87 for Series II, and page 115 for Series I.
Note: Shown in this catalog are the most common insert patterns for PCB applications. For availability of other arrangements, consult Amphenol Aerospace.

PCB Contacts 38999, Series I LJT, II JT, III TV

Insert Arrangements

INSERT ARRANGEMENT #22-35 / 23-35

Connector Type:	JT MIL-DTL-38999 Series II	LJT MIL-DTL-38999 Series I	Tri-Start MIL-DTL-38999 Series III
Insert Designation:	22-35	23-35	23-35

Number of Contacts	Contact Size	Service Rating
100	22D	M

Contact Locations
Front face of pin insert shown

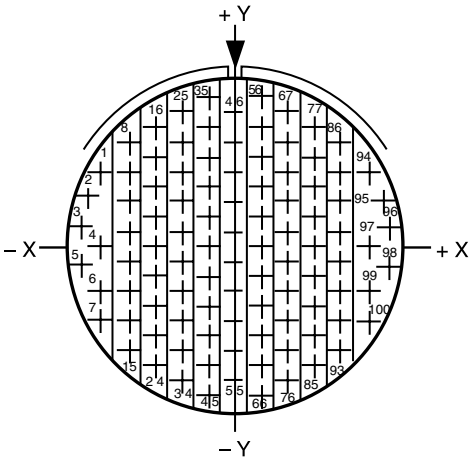

Contact Hole Locations		
Contact Number	Location X Axis	Location Y Axis
1	–.428	+.241
2	–.467	+.154
3	–.488	+.061
4	–.415	.000
5	–.488	–.061
6	–.428	–.142
7	–.428	–.237
8	–.332	+.333
9	–.332	+.238
10	–.332	+.143
11	–.332	+.048
12	–.332	–.047
13	–.332	–.142
14	–.332	–.237
15	–.332	–.332
16	–.249	+.380
17	–.249	+.285
18	–.249	+.190
19	–.249	+.095

Contact Hole Locations		
Contact Number	Location X Axis	Location Y Axis
20	–.249	.000
21	–.249	–.095
22	–.249	–.190
23	–.249	–.285
24	–.249	–.380
25	–.166	+.428
26	–.166	+.333
27	–.166	+.238
28	–.166	+.143
29	–.166	+.048
30	–.166	–.047
31	–.166	–.142
32	–.166	–.237
33	–.166	–.332
34	–.166	–.427
35	–.083	+.475
36	–.083	+.380
37	–.083	+.285
38	–.083	+.190
39	–.083	+.095
40	–.083	.000
41	–.083	–.095
42	–.083	–.190
43	–.083	–.285
44	–.083	–.380
45	–.083	–.475
46	.000	+.428
47	.000	+.333
48	.000	+.238
49	.000	+.143
50	.000	+.048
51	.000	–.047
52	.000	–.142
53	.000	–.237
54	.000	–.332
55	.000	–.427
56	+.083	+.475
57	+.083	+.380
58	+.083	+.285
59	+.083	+.190

Contact Hole Locations		
Contact Number	Location X Axis	Location Y Axis
60	+.083	+.095
61	+.083	.000
62	+.083	–.095
63	+.083	–.190
64	+.083	–.285
65	+.083	–.380
66	+.083	–.475
67	+.166	+.428
68	+.166	+.333
69	+.166	+.238
70	+.166	+.143
71	+.166	+.048
72	+.166	–.047
73	+.166	–.142
74	+.166	–.237
75	+.166	–.332
76	+.166	–.427
77	+.249	+.380
78	+.249	+.285
79	+.249	+.190
80	+.249	+.095
81	+.249	.000
82	+.249	–.095
83	+.249	–.190
84	+.249	–.285
85	+.249	–.380
86	+.332	+.333
87	+.332	+.238
88	+.332	+.143
89	+.332	+.048
90	+.332	–.047
91	+.332	–.142
92	+.332	–.237
93	+.332	–.332
94	+.428	+.241
95	+.467	+.154
96	+.488	+.061
97	+.415	.000
98	+.488	–.061
99	+.428	–.142
100	+.428	–.237

All dimensions for reference only. For alternate rotations see page 47 for Series III, page 87 for Series II, and page 115 for Series I.
Note: Shown in this catalog are the most common insert patterns for PCB applications. For availability of other arrangements, consult Amphenol Aerospace.

PCB Contacts 38999, Series I LJT, II JT, III TV

Insert Arrangements

INSERT ARRANGEMENT #22-55 / 23-55

Connector Type:	JT MIL-DTL-38999 Series II	LJT MIL-DTL-38999 Series I	Tri-Start MIL-DTL-38999 Series III
Insert Designation:	22-55	23-55	23-55

Number of Contacts	Contact Size	Service Rating
55	20	I

Contact Locations
Front face of pin insert shown

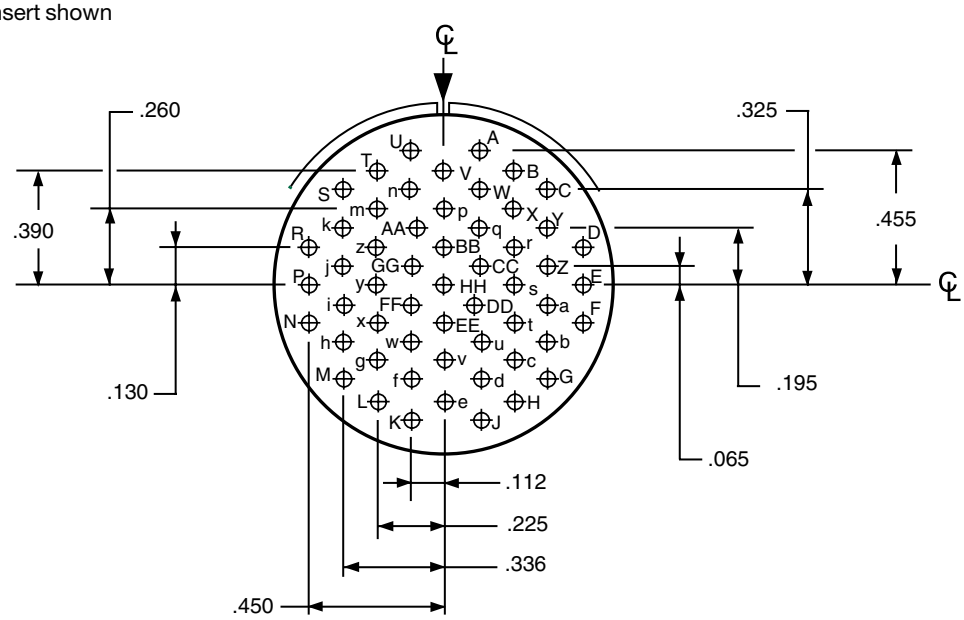

INSERT ARRANGEMENT #24-31 / 25-31

Connector Type:	JT MIL-DTL-38999 Series II	LJT MIL-DTL-38999 Series I	Tri-Start MIL-DTL-38999 Series III
Insert Designation:	24-31	NA	NA

Number of Contacts	Contact Size	Service Rating
31	16	I

Contact Locations
Front face of pin insert shown

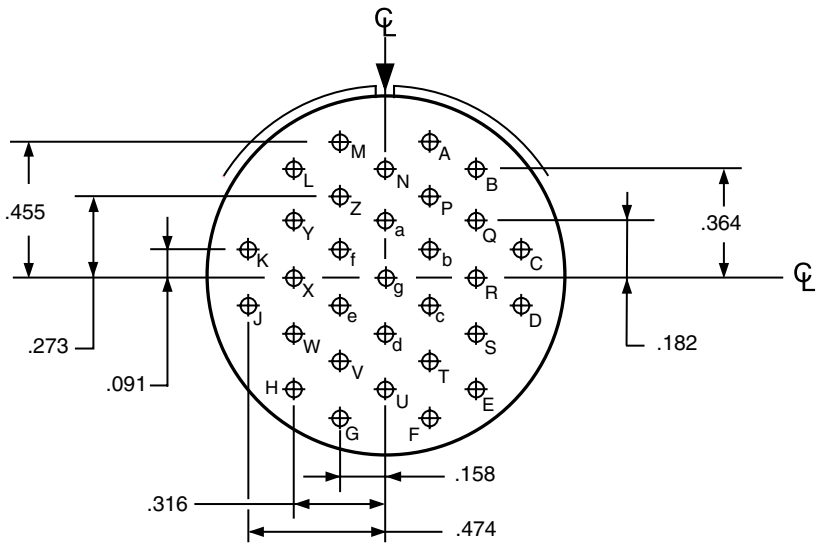

All dimensions for reference only. For alternate rotations see page 47 for Series III, page 87 for Series II, and page 115 for Series I.
Note: Shown in this catalog are the most common insert patterns for PCB applications. For availability of other arrangements, consult Amphenol Aerospace.

PCB Contacts 38999, Series I LJT, II JT, III TV

Insert Arrangements

INSERT ARRANGEMENT #24-35 / 25-35

Connector Type:	JT MIL-DTL-38999 Series II	LJT MIL-DTL-38999 Series I	Tri-Start MIL-DTL-38999 Series III
Insert Designation:	24-35	25-35	25-35

Number of Contacts	Contact Size	Service Rating
128	22D	M

Contact Locations

Front face of pin insert shown

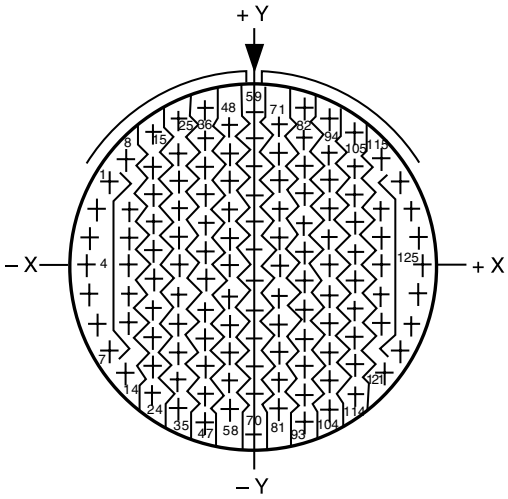

Contact Hole Locations		
Contact Number	Location X Axis	Location Y Axis
1	–.479	+.279
2	–.520	+.190
3	–.546	+.095
4	–.555	.000
5	–.546	–.095
6	–.520	–.190
7	–.479	–.279
8	–.424	+.357
9	–.415	+.190
10	–.415	+.095
11	–.415	.000
12	–.415	–.095
13	–.415	–.190
14	–.424	–.357
15	–.332	+.444
16	–.332	+.332
17	–.332	+.237
18	–.332	+.142
19	–.332	+.047
20	–.332	–.047
21	–.332	–.142
22	–.332	–.237
23	–.332	–.332
24	–.332	–.427
25	–.249	+.496
26	–.249	+.380
27	–.249	+.285
28	–.249	+.190

Contact Hole Locations		
Contact Number	Location X Axis	Location Y Axis
29	–.249	+.095
30	–.249	.000
31	–.249	–.095
32	–.249	–.190
33	–.249	–.285
34	–.249	–.380
35	–.249	–.475
36	–.160	+.531
37	–.166	+.427
38	–.166	+.332
39	–.166	+.237
40	–.166	+.142
41	–.166	+.047
42	–.166	–.047
43	–.166	–.142
44	–.166	–.237
45	–.166	–.332
46	–.166	–.427
47	–.166	–.522
48	–.083	+.475
49	–.083	+.380
50	–.083	+.285
51	–.083	+.190
52	–.083	+.095
53	–.083	.000
54	–.083	–.095
55	–.083	–.190
56	–.083	–.285
57	–.083	–.380
58	–.083	–.475
59	.000	+.522
60	.000	+.427
61	.000	+.332
62	.000	+.237
63	.000	+.142
64	.000	+.047
65	.000	–.047
66	.000	–.142
67	.000	–.237
68	.000	–.332
69	.000	–.427
70	.000	–.555
71	+.083	+.475
72	+.083	+.380
73	+.083	+.285
74	+.083	+.190
75	+.083	+.095
76	+.083	.000
77	+.083	–.095
78	+.083	–.190

Contact Hole Locations		
Contact Number	Location X Axis	Location Y Axis
79	+.083	–.285
80	+.083	–.380
81	+.083	–.475
82	+.160	+.531
83	+.166	+.427
84	+.166	+.332
85	+.166	+.237
86	+.166	+.142
87	+.166	+.047
88	+.166	–.047
89	+.166	–.142
90	+.166	–.237
91	+.166	–.332
92	+.166	–.427
93	+.166	–.522
94	+.249	+.496
95	+.249	+.380
96	+.249	+.285
97	+.249	+.190
98	+.249	+.095
99	+.249	.000
100	+.249	–.095
101	+.249	–.190
102	+.249	–.285
103	+.249	–.380
104	+.249	–.475
105	+.332	+.444
106	+.332	+.332
107	+.332	+.237
108	+.332	+.142
109	+.332	+.047
110	+.332	–.047
111	+.332	–.142
112	+.332	–.237
113	+.332	–.332
114	+.332	–.427
115	+.424	+.357
116	+.415	+.190
117	+.415	+.095
118	+.415	.000
119	+.415	–.095
120	+.415	–.190
121	+.424	–.357
122	+.479	+.279
123	+.520	+.190
124	+.546	+.095
125	+.555	.000
126	+.546	–.095
127	+.520	–.190
128	+.479	–.279

All dimensions for reference only. For alternate rotations see page 47 for Series III, page 87 for Series II, and page 115 for Series I.
Note: Shown in this catalog are the most common insert patterns for PCB applications. For availability of other arrangements, consult Amphenol Aerospace.

Amphenol Aerospace

INSERT ARRANGEMENT #24-61 / 25-61

Connector Type:	JT MIL-DTL-38999 Series II	LJT MIL-DTL-38999 Series I	Tri-Start MIL-DTL-38999 Series III
Insert Designation:	24-61	25-61	25-61

Number of Contacts	Contact Size	Service Rating
61	20	I

Contact Locations
Front face of pin insert shown

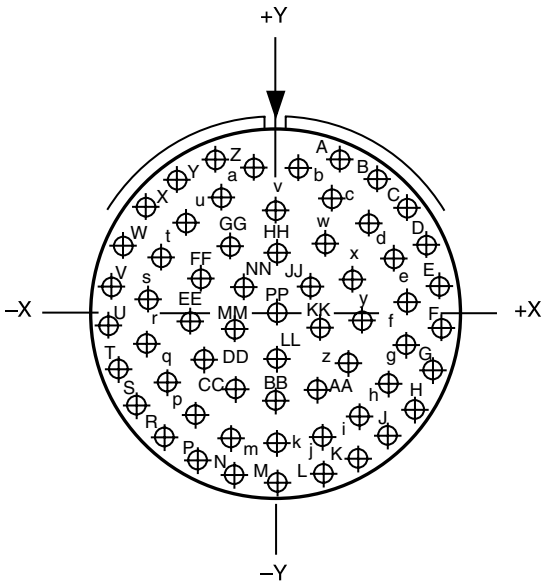

Contact Hole Locations		
Contact Number	Location X Axis	Location Y Axis
A	+.196	+.500
B	+.314	+.435
C	+.413	+.343
D	+.485	+.230
E	+.527	+.101
F	+.536	–.030
G	+.511	–.164
H	+.454	–.287
J	+.368	–.391
K	+.259	–.470
L	+.134	–.519
M	.000	–.537
N	–.134	–.519
P	–.259	–.470
R	–.368	–.391
S	–.454	–.287
T	–.511	–.164
U	–.536	–.030
V	–.527	+.101
W	–.485	+.230
X	–.413	+.343
Y	–.314	+.435
Z	–.196	+.500
a	–.068	+.454
b	+.068	+.454
c	+.173	+.363
d	+.285	+.283
e	+.362	+.175
f	+.399	+.046
g	+.392	–.088

Contact Hole Locations		
Contact Number	Location X Axis	Location Y Axis
h	+.341	–.213
i	+.251	–.314
j	+.133	–.379
k	.000	–.402
m	–.133	–.379
n	–.251	–.314
p	–.341	–.213
q	–.392	–.088
r	–.399	+.046
s	–.362	+.175
t	–.285	+.283
u	–.173	+.363
v	.000	+.338
w	+.147	+.223
x	+.237	+.122
y	+.267	–.010
z	+.228	–.139
AA	+.131	–.233
BB	.000	–.267
CC	–.131	–.233
DD	–.228	–.139
EE	–.267	–.010
FF	–.237	+.122
GG	–.147	+.223
HH	.000	+.200
JJ	+.105	+.094
KK	+.135	–.041
LL	.000	–.132
MM	–.135	–.041
NN	–.105	+.094
PP	.000	.000

All dimensions for reference only. For alternate rotations see page 47 for Series III, page 87 for Series II, and page 115 for Series I.
Note: Shown in this catalog are the most common insert patterns for PCB applications. For availability of other arrangements, consult Amphenol Aerospace.

MIL-DTL-38999, Series I LJT, II JT, III TV, HD

Contact Ratings/ Service Ratings

CONTACT RATING FOR TV III, HD, JT II, LJT I, SJT

Contact Size	Test Current (Amps)		Maximum Millivolt Drop Crimp*	Maximum Millivolt Drop
	Crimp	Hermetic		Hermetic*
23	5	3	73	85
22M	3	2	45	60
22D	5	3	73	85
22	5	3	73	85
20	7.5	5	55	60
16	13	10	49	85
12	23	17	42	85
10 (Power)	33	NA	33	NA
8 (Power)	65	NA	26	NA
4	80	NA	23	NA
0	150	NA	21	NA

*When tested using silver plated wire.

Contact Size	Crimp Well Data		Solder Well Data	
	Well Diameter	Normal Well Depth	Well Diameter	Nominal Well Depth
23	.0345 ± .0010	.141	.0345 ± .0010	.130
22M	.028 ± .001	.141	.029 +.004 – .000	
22D	.0345 ± .0010	.141	.036 +.004 -.000	.094
22	.0365 ± .0010	.141	.036 +.004 -.000	.094
20	.047 ± .001	.209	.044 +.004 -.004	.125
16	.067 ± .001	.209	.078 +.000 -.004	.141
12	.100 ± .002	.209	.116 +.004 -.002	.141
10 (Power)	.137 ± .002	.355	NA	NA
8	.181 ± .002	.490	NA	NA
4	.281 ± .002	.490	NA	NA
0	.453 ± .002	.585	NA	NA

MIL-DTL-38999 SERIES III STANDARD 500 CYCLE CONTACTS FOR TV AND CTV, P & S

Contact Size	TV/CTV Pins		TV/CTV Sockets	
	Military No.	Supersedes	Military No.	Supersedes
8 (Coax)*	M39029/60-367	MS27536	M39029/59-366	MS27535
8 (Power)	Contact Factory	"	"	"
8 (Twinax)	M39029/90-529**	N/A	M39029/91-530	N/A
10 (Power)	M39029/58-528	N/A	M39029/56-527	N/A
12	M39029/58-365	MS27493-12	M39029/56-353	MS27490-12
16	M39029/58-364	MS27493-16	M39029/56-352	MS27490-16
20	M39029/58-363	MS27493-20	M39029/56-351	MS27490-20
22D	M39029/58-360	MS27493-22D	M39029/56-348	MS27490-22D
4	N/A	N/A	N/A	N/A
0	N/A	N/A	N/A	N/A

Above part numbers include standard 500 cycle finish designation - gold plating over suitable underplate in accordance with SAE AS39029. For other finish variations, consult Amphenol Aerospace.

*For use with RG180B/U and RG195A/U cable. For other size 8 coax or optional sizes 12 and 16 coax contacts available for use in Tri-Start connectors, see High Speed catalog or consult Amphenol Aerospace.

MIL-DTL-38999 SERIES III 1500 CYCLE CONTACTS, CLASSES H & J

Contact Size	CTV Pins			CTV Sockets		
	Commercial No.	Military No.	Supersedes	Commercial No.	Military No.	Supersedes
12	10-597072-2X	M39029/107-623	–	10-597073-2X	M39029/106-617	–
16	10-597068-2X	M39029/107-622	–	10-597069-2X	M39029/106-616	–
20	10-597064-2X	M39029/107-621	–	10-597065-2X	M39029/106-615	–
22D	10-597058-3X	M39029/107-620	–	10-597061-2X	M39029/106-614	–

MIL-DTL-38999 SERIES II JT/ SERIES I LJT/SJT SERIES CRIMP CONTACTS

Contact Size	JT/LJT/SJT Pins MS No.	JT Socket MS No.	LJT/SJT Sockets MS No.
8 (Coax)*	M39029/60-367	NA	M39029/59-366
8 (Twinax)	M39029/90-529**	NA	M39029/91-530
10 (Power)	M39029/58-528	NA	M39029/56-527
12	M39029/58-365	M39029/57-359	M39029/56-353
16	M39029/58-364	M39029/57-358	M39029/56-352

Contact Size	JT/LJT Pins MS No.	JT Socket MS No.	LJT/SJT Sockets MS No.
20	M39029/58-363	M39029/57-357	M39029/56-351
22	M39029/58-362	M39029/57-356	M39029/56-350
22M	M39029/58-361	M39029/57-355	M39029/56-349
22D	M39029/58-360	M39029/57-354	M39029/56-348

MIL-DTL-38999 SERIES II JT/ I LJT THERMOCOUPLE CONTACTS

Contact Size	Material	JT/LJT Pins	JT Sockets	LJT Sockets
20	Chromel	10-407862-310	10-407863-310	10-407236-310
	Alumel	10-407862-320	10-407863-320	10-407865-320
	Iron	10-407862-335	10-407863-335	10-407865-335
	Constantan	10-407862-342	10-407863-342	10-407865-342

Partial Listing. If you do not see the contact for your application, consult Amphenol Aerospace.

MIL-DTL-38999 SERIES II JT/ I LJT THERMOCOUPLE CONTACTS PYLE VERSION

Contact Size	Pins (II JT/I LJT)		Sockets (LJT)		Material
	Spec Number	Pyle Number	Spec Number	Pyle Number	
22D	M39029/87-472	T3-4022-10P	M39029/88-484	T3-4122-10P	CHROMEL
22D	M39029/87-471	T3-4022-10R	M39029/88-483	T3-4122-10R	ALUMEL
20	M39029/87-476	T3-4020-10P	M39029/88-488	T3-4120-10P	CHROMEL
20	M39029/87-475	T3-4020-10R	M39029/88-487	T3-4120-10R	ALUMEL
16	M39029/87-480	T3-4016-10P	M39029/88-492	T3-4116-10P	CHROMEL
16	M39029/87-479	T3-4016-10R	M39029/88-491	T3-4116-10R	ALUMEL

Above part numbers include standard finish designation - gold plating over suitable underplate in accordance with MIL-DTL-39029. For other finishes, consult Amphenol Aerospace. Note: 22M and 22D contacts are interchangeable. *For use with RG180B/U and RG195A/U cable. For other size 8 coax or optional sizes 12 and 18 coax contacts available for use in JT/LJT connectors, Refer to the High Speed Catalog. ** For use with 17/M176-00002 cable.

MIL-DTL-38999 SERIES III SEALING PLUGS

Contact Size	Commercial No.	Military No.
8 (Coax)	10-482099-8	N/A
8 (Twinax)	T3-4008-59P	N/A
8 (Power)	10-405996-83	MS27488-8-3
10 (Power)	T3-4010-59P	M85049/81-10
12	10-405996-122	MS27488-12-2
16	10-405996-162	MS27488-16-2
20	10-405996-202	MS27488-20-2
22D	10-405996-222	MS27488-22-2
4	10-405996-43	MS27488-4-3
0	10-405996-03	MS27488-0-3

MIL-DTL-38999 SERIES II JT/ I LJT SEALING PLUGS

Contact Size	Commercial No.	Military No.
8 (Coax)	10-482099-8	MS27488-8
8 (Twinax)	T3-4008-59P	N/A
10 (Power)	10-576225	N/A
12	10-405996-122	MS27488-12-2
16	10-405996-162	MS27488-16-2
20	10-405996-202	MS27488-20-2
22	10-405996-222	MS27488-22-2
22M	10-405996-222	MS27488-22-2
22D	10-405996-222	MS27488-22-2

SJT SEALING PLUGS

Contact Size	Commercial No.
8 (Coax)	10-482099-8
8 (Twinax)	10-482099-8
10 (Power)	NA
12	10-405996-012 Yellow
16	10-405996-016 Blue
20	10-405996-020 Red
22	10-405996-022 Black
22M	10-405996-022 Black
22D	10-405996-022 Black

** For use with M17/M176-00002 cable.
† Optional design - see slash sheet MS39029.
For other contact options available for use in Tri-Start connectors (wire wrap, thermocouple, fiber optic), consult Amphenol.

MIL-DTL-38999, Series I LJT, II JT, III TV

Thermocouple Contacts/Sealing Plugs/Finishing Data

SERVICE RATING**

Service Rating	Suggested Oper. Voltage (Sea Level)		Test Voltage (Sea Level)	Test Voltage 50,000 Ft.	Test Voltage 70,000 Ft	Test Voltage 110,000 Ft.
	AC (RMS)	DC				
M	400	500	1300 VRMS	550 VRMS	350 VRMS	200 VRMS
N	300	450	1000 VRMS	400 VRMS	260 VRMS	200 VRMS
I	600	850	1800 VRMS	600 VRMS	400 VRMS	200 VRMS
II	900	1250	2300 VRMS	800 VRMS	500 VRMS	200 VRMS

** Please note that the establishment of electrical safety factors is left entirely in the designer's hands, since they are in the best position to know what peak voltage, switching surges, transients, etc. can be expected in a particular circuit.

FINISH DATA MIL-DTL-38999, TRI-START, SERIES III TV

ALUMINUM SHELL COMPONENTS NON-HERMETIC*		
Finish	Service Class	
	Military	Commercial
Anodic Coating (Non-Conductive)	C*	RX**
Electroless Nickel	F (Metal)*	RF
	M (Composite)	
Olive Drab Cadmium Plate Nickel Base	W (Metal)*	RW
	J (Composite)	
Stainless Steel with Nickel Plate (non-firewall)	L	
Stainless Steel with Nickel Plate (firewall)	S	RS
Stainless Steel	K	RK
Durmalon plated	T*	DT
Zinc-Nickel Plated	Z*	DZ
Electroless Nickel Space Grade	G	

**Add Suffix (005) to part number.

HERMETIC SHELL COMPONENTS		
Material/Finish	Service Class	
	Military	Commercial
Stainless Steel	Y	Y
Stainless Steel with Nickel Plate	N	YN

FINISH DATA MIL-DTL-38999, SERIES I LJT, II JT

ALUMINUM SHELL COMPONENTS NON-HERMETIC					
Finish	Suffix		Finish Plus "SR" Suffix	Indicated Finish Standard for JT Types Listed Below	Indicated Finish Standard for LJT Types Listed Below
	Military	Commercial			
Cadmium Plated Nickel Base	MS (A)	–	(SR)	JT/JTG/JTL/JTP	LJT/LJTP
Anodic Coating (Alumilite)	MS (C)	(005)	(300)	JTS/JTPS/JTLS	LJTPS/LJTS
Chromate Treated (Iridite 14-2)		(011)	(344)	JTN/JTPN/JTLN	LJTN/LJTPN
Olive Drab Cadmium Plate Nickel Base	MS (B)	(014)	(386)		
Electroless Nickel	MS (F)	(023)	(424)		
Nickel-PTFE Durmalon		(038)			
Space Grade		(453)			

HERMETIC CONNECTORS				
Finish	Suffix		Indicated Finish Standard for JT Types Listed Below	Indicated Finish Standard for LJT Types Listed Below
	Military	Commercial		
Carbon Steel Shell Tin Plated Shell and Contacts			JT( )H / JT( )Y JTL( )H / JTL( )Y	LJT( )Y LJT( )H
Carbon Steel Shell Tin Plated Shell and Gold Plated Contacts	MS (D)			
Stainless Steel Shell Gold Plated Contacts	MS (E)	(162)	JTS( )Y JTLS( )Y	LJTS( )Y

Amphenol RoHS Compliant Platings

Alternative to Cadmium

Amphenol Aerospace

DURMALON™

Amphenol's Answer to EU RoHS/ELV/Cadmium Free Restrictions

Commercial, industrial & military markets are rapidly moving away from restricted materials such as Cadmium (Cd) & Hexavalent Chromium (Cr(VI)). Both of these restricted materials are toxic and are known carcinogens. Amphenol is offering an alternative finish that complies with all customer requirements tied to these specifications.

MIL-DTL-38999, Rev L has established new service classes for alternative finishes addressing these requirements for Cadmium replacement. Amphenol is using this and European Union Directive 2002/95/EC RoHS (Regulation of Hazardous Substances) as a guide to qualification for all domestic, global, commercial, industrial, & military specifications requiring the reduction or elimination of these restricted materials.

Amphenol has qualified Durmalon, with internal part number coding "DT" finish, which meets or exceeds the 38999 designated class "T" finish, Nickel Fluorocarbon Polymer. Durmalon is also EU RoHS compliant and is Cadmium free, Lead free, and Hexavalent Chromium free.

We also offer additional platings such as "DX", (Durmalon, heavy duty final plate) to support JSF, F-35 program. The DX plating is intended to meet higher corrosion Sulfur Dioxide (SO2)/salt fog requirements of JSF.

Cadmium has been applied to numerous components of land, sea and air weapon systems and NASA systems for many years as it provides sacrificial corrosion protection and excellent lubricity for threaded applications.

The Defense Logistics Agency (DLA) has added the following cadmium alternative finishes to MIL-DTL-38999, Rev L (and other connector specs):

- Nickel Fluorocarbon Polymer
- Zinc-Nickel

AMPHENOL'S DURMALON™

Durmalon, like Olive-Drab Cadmium plating (Class W), meets 500 hours of dynamic salt spray, combined with 500 mating cycles and meets specified millivolt drop shell-to-shell conductivity. Durmalon also meets a 200° C temperature rating. Durmalon has been proven to meet this requirement as well as Potassium Formate-Deicer fluid testing performed by Boeing.

DURMALON™
Alternative to Cadmium

APPLICATIONS

Interest for non-hazardous alternative finishes is gaining momentum & many customers are currently using Durmalon for a broad number of applications. Durmalon combines the unique lubrication and anti-wetting properties of PTFE with corrosion resistance, high conductivity and EU RoHS compliance in a non-reflective finish.

TESTING

Amphenol Aerospace has performed extensive testing on numerous alternative platings with the most consistent performer being the Durmalon. For specific applications please contact Amphenol Aerospace.

BLACK ZINC NICKEL

Black Zinc Nickel is Amphenol's 2nd RoHS Compliant Plating Alternative to Cadmium Amphenol is now offering a new RoHS compliant alternative to Cadmium. Black Zinc Nickel is a non-reflective and conductive black finish approved for 500 hrs salt spray making it an excellent choice for harsh environments. Black Zinc Nickel has been qualified by the DLA, with internal part number coding "DZ" finish, which meets or exceeds the 38999 designated class "Z" finish. Black Zinc Nickel is compatible with other platings and available on a wide variety of connectors and accessories including all MIL-DTL-38999 Series III connectors.

APPLICATIONS

Interest for non-hazardous alternative finishes are gaining momentum & many customers are currently using Black Zinc Nickel for a broad number of applications. Black Zinc Nickel is typically used on applications for commercial aerospace and military defense, who are now moving away from toxic Cadmium to more environmentally friendly options.

TESTING

Amphenol Aerospace has performed extensive testing on numerous alternative platings including Black Zinc Nickel. For specific applications please contact Amphenol Aerospace.

Requirements	Cadmium	Durmalon™	Black Zinc Nickel
Coupling Torque Post 500 hr. salt	■	■	■
Shell to Shell Conductivity <2.5 millivolts	■	■	■
Cycles of Durability 500 mates	■	■	■
Salt Spray Dynamic 500 hours	■	■	■
Temperature Rating 175° C	■	■	■
Non-Reflective	■	■	■
EU RoHS/ELV Compliant*		■	■
Non-Magnetic	■	■	■
De-icing Fluid**		■	■

* Meets EU RoHS/ELV maximum concentration values (MCV) of 1000 ppm (0.1% w/w) or (0.01% w/w) per homogenous material.

** Potassium Formate/Acetate based de-icing fluids.

Note: Specifications are subject to change without notice.

MIL-DTL-38999, Series III, TV

A

TABLE OF CONTENTS FOR SECTION A

Combined MIL-DTL-38999 Series I, II, III
Shell Size & Insert Arrangements Availability 2-6
Insert Arrangement Drawings 7-14
PCB Insert Arrangements 15-29
Contact - Ratings, Service Ratings, Finish Data 30-32
Amhenol RoHS Compliant Plating 33

MIL-DTL-38999, Series III TV
Performance, Options 35, 36
Test Data 37
Weight Comparison (Composite vs. Metal) 38
Dualok 39
HD38999, High Density 40
Custom 41
Configurator 42
How to Order (Military & Commercial) 43-47
How to Order (Boeing BACC63) 48

TV SHELL STYLES:

Crimp Wall Mounting Receptacle TVP00R (D389999/20) /CTVP00R (Military D38999/20) 49
Crimp Box Mounting Receptacle TVP02R / CTVP02R . . . 50
Line Receptacle TV01, TVS01, CTV01, CTVS01 51
Crimp Jam Nut Receptacle TV07R (D38999/24) / CTV07R (Military D38999/24) 52
Straight Plug TV06, TVS06, CTV06, CTVS06 (Military D38999/26). 53
Crimp Flange Mounting Plug TV09R 54
Dualok Plug/Receptacle TV56, TVS56, CTV56, CTVS56. . . 55
RotoLok High Vibration Plug Solutions 56

PCB:

PCB Wall Mounting, Back Panel TVP00, TVPS00 57
PCBWall Mounting, Back Panel, Clinch Nuts, TVP10, TVPS10 58
PCB Wall Mounting, Double Flange, TVP40, TVPS40 59
PCB Box Mounting Receptacle, TVP02, TVPS02 60
PCB Box Mounting Receptacle, Clinch Nuts, TVP12, TVPS12 61
PCB Jam Nut Receptacle, TV07, TVS07 62
PCB Jam Nut Receptacle, Double Flange, TVP47, TVPS47 . 63
PCB Hermetic Box, Jam Nut, Solder , Weld Mounting. . . 64-67

HERMETIC:

Hermetic Box Mounting TVPS02Y(D38999/21) 68
Hermetic Jam Nut Receptacle TVS07Y (D38999/23) . .69
Hermetic Solder Mounting TVSIY (D38999/25) 70
Hermetic Weld Mounting TVSHIY (D38999/27) 70

BREAKAWAY:

Breakaway Fail-Safe Connectors 71
How to Order Breakaway (Military) 72, 73
How to Order Breakaway (Commercial) 74
Fail-Safe Lanyard Release Plug 75
How to Order Breakaway MIL-STD-1760 (Military) . . .76
TV Breakaway (D38999/31) for MIL-STD-1760 77
TV Breakaway Commercial Version for D38999/31, Type 6 78
How to Order Commercial Version D38999/31, Type 6 .79
Insert Arrangements for Breakaway Fail-Safe 80
Breakaway Fail-Safe 88-725041, 88-725014 81
Breakaway Hybrid, Low Profile Lanyard Release Plug. .82
Stores Management Type II, Rail Launch (MIL-STD-1760) 82

Accessories:

Section F 165-183

Amphenol Aerospace

TRI-START™ MIL-DTL-38999 SERIES III WITH METAL SHELLS - ALUMINUM, STAINLESS STEEL, CLASS K FIREWALL

Amphenol® Tri-Start MIL-DTL-38999* Series III Connectors offer the highest performance capabilities for both general duty and severe environment applications. Meeting or exceeding MIL-DTL-38999 Series III requirements, the Tri-Start connector with standard metal shells (aluminum or stainless steel with several finish options) offers these features:

- **EMI Shielding** - solid metal-to-metal coupling, grounding fingers, electroless nickel plating, and thicker wall sections provide superior EMI shielding capability of 65dB minimum at 10 GHz
- **Contact Protection** - recessed pins in this 100% scoop-proof connector minimize potential contact damage
- **Moisture Resistance** - improved interfacial seal design helps prevent electrolytic erosion of contacts
- **Corrosion Resistance** - shells of stainless steel or cadmium over nickel plating withstand a 500 hour salt spray exposure
- **Vibration/Shock** - operates under severe high temperature vibration, through 200°C
- **Firewall Capability** - available in a stainless steel shell, class RK, RS
- **Lockwiring Eliminated** - unique, self-locking, quick coupling connector eliminates lockwiring
- **Quick Coupling** - completely mates and self-locks in a 360° turn of the coupling nut
- **Inventory Support Commonality** - uses standard MIL-DTL-38999 contacts, application tools, insert arrangements
- **Electrostatic Discharge Protection (ESD)** - protection for sensitive circuitry without diodes, varistors, etc., with the use of the Faraday Cage principle which shunts high voltage, high current discharge events (see page Amphenol Filter Section)
- **Hermetic**- air leakage limited to 1 X 10^{-7} cm^3 per second optional
- **Qualified Specifications** - Stainless Steel qualified to BACC63DB and BACC63DC specifications

PASSIVATED STAINLESS STEEL

ELECTROLESS NICKEL

OLIVE DRAB CADMIUM

DURMALON PLATED

ZINC NICKEL PLATED

MIL-DTL-38999, Series III TV

Options

OFFER MORE VERSATILITY & OPTIONS THAN ANY OTHER INTERCONNECTION FAMILY!

HD38999

DUALOK

FILTER

PC TAILS

FAIL SAFE

CLUTCH-LOK

FIBER OPTICS

HIGH SPEED

HERMETIC

FLEX

Composite Connector Patents:
4,268,103; 4,648,670; 4,682,832; 4,703,987.
Clutch-Lok® Patent 6,152,753.

High reliability and increased versatility best describe Amphenol MIL-DTL-38999, Series III circular connectors. Originally designed for the harshest of environments and most demanding of applications, Amphenol MIL-DTL-38999 Series III, Tri-Start connectors continue to evolve in pace with the needs of an ever-changing market.

Amphenol Tri-Start connectors can be configured with a number of application specific technologies like:

- High Density HD38999
- Dualok
- PC Tails
- Filters
- Fail Safe
- CLUTCH-LOK
- Fiber Optics
- High Speed Contacts
- Hermetics
- Flex

Flexibility aids in design optimization through the combination of different technologies within a common, time-tested, harsh environment connector body.

For more information about options, please call 800-678-0141 or visit www.amphenol-aerospace.com.

Amphenol Aerospace

TRI-START, SERIES III TYPICAL SHIELDING EFFECTIVENESS TEST DATA

EMI/EMP SHIELDING EFFECTIVENESS dB
TESTING BY TRIAXIAL METHOD

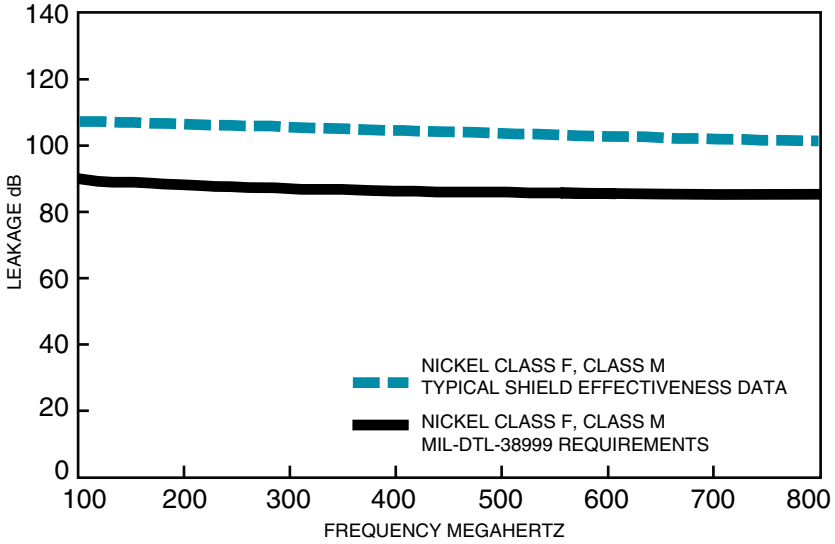

AMPHENOL® TRI-START CONNECTORS PROVIDE EMI/EMP SHIELDING CAPABILITY WHICH EXCEEDS MIL-DTL-38999 SERIES III REQUIREMENTS.

The TV and CTV Series III connector with standard solid metal-to-metal coupling, EMI grounding fingers and conductive finishes have proven to be the ultimate in EMI/EMP shielding effectiveness. The charts illustrate shielding effectiveness data which is typical of Tri-Start connectors tested with the nickel finish (Class F-metal, Class M-composite) over a wide frequency range.

The vibration capability of the Tri-Start Series is shown in the chart below. This illustrates the most severe vibration envelope of any qualified connector available today.

These capabilities along with a +200°C, -65°C temperature rating and superior moisture sealing protection provide the user with a connector that can withstand the most rigorous application.

TRI-START, SERIES III TYPICAL SHIELDING EFFECTIVENESS TEST DATA

EMI/EMP SHIELDING EFFECTIVENESS dB
TESTING BY MODE STIRRING METHOD

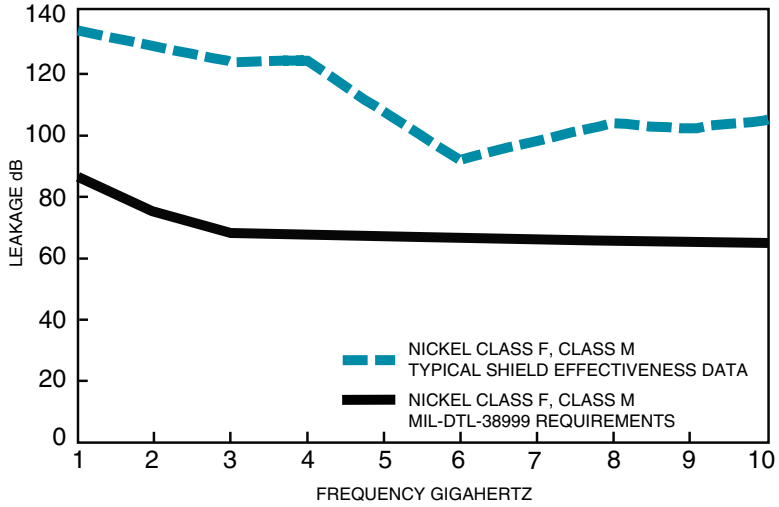

TRI-START VIBRATION CRITERIA

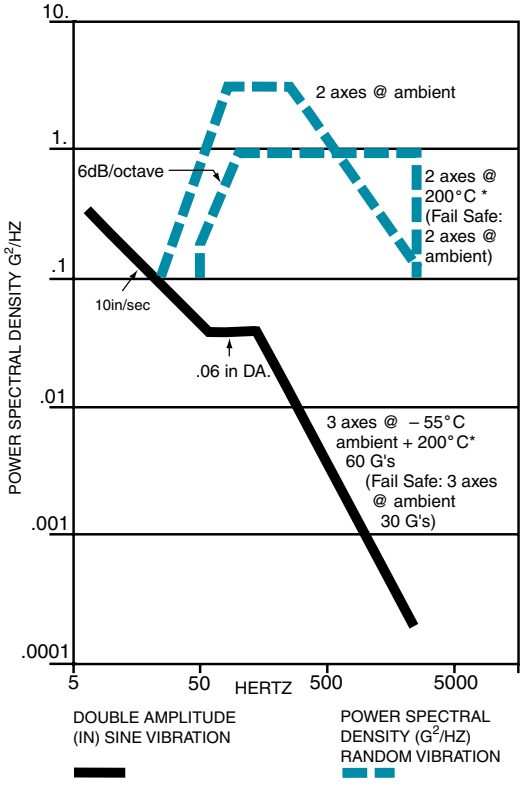

* Dependant on shell finish

Test data beyond 2GHz is subject to equipment variation.

NOTE: For test data information on the new Clutch-Lok Tri-Start, high vibration connectors, consult Amphenol Aerospace.

MIL-DTL-38999, Series III TV

How to Order (Commercial)

		ALUMINUM 175ºC	
3. SERVICE CLASS	DT-	Durmalon: 500 hrs. salt spray, -50dB@10GHz	
	DZ-	Black Zinc: 500 hrs. salt spray, -50dB@10GHz	
	RW-	Olive Drab Cadmium-500 hrs. salt spray, -65dB@10GHz	
	RGW-	Olive Drab Cadmium (with Ground Plane)	

		ALUMINUM 200ºC	
3. SERVICE CLASS	RF-	Electroless Nickel-48 hrs. salt spray, -65dB@10GHz	
	RGF-	Electroless Nickel (with ground plane)	
	RB-	Marine Bronze: 2,000 hr. salt spray, -65dB@10GHz	
	DS-	AP-93 Tri-Nickel Alloy, Aluminum, 1000 Hr., 200°C, -65dB@100Hz*	

		COMPOSITE 175ºC
3. SERVICE CLASS	RW-	Olive Drab Cadmium-500 hrs. salt spray, -65dB@10GHz
	RGW-	Olive Drab Cadmium (with Ground Plane)

		COMPOSITE 200ºC	
3. SERVICE CLASS	RF-	Electroless Nickel-48 hrs. salt spray, -65dB@10GHz	
	RGF-	Electroless Nickel (with ground plane)	

		STAINLESS STEEL 200ºC	
3. SERVICE CLASS	RK-	Paaivated (Firewall): 500 hrs. salt, -65dB@10GHz	
	RKN-	Passivated (Non-Firewall): 500 hrs. salt, -65dB@10GHz	
	RS-	Nickel Plated (Firewall): 500 hrs. salt, -65dB@10GHz	
	RL-	Nickel Plated (Non-Firewall): 500 hrs. salt, -50dB@10GHz	

4. SHELL SIZE & INSERT ARRANGEMENT	
PAGE 2-5	First number represents Shell Size, second number is the Insert Arrangement.

Insert arrangements using multi-axial (i.e. coax, twinax, triax shielded) contacts should not be used in firewall applications. *Coaxial arrangements are not available in firewall classes.

5. CONTACT TYPE	
P	500 Cycle Pin Contacts, if require Less Contacts place (LC) at the end of part number
S	500 Cycle Socket Contacts, if require Less Contacts place (LC) at the end of part number
H	1500 Cycle Pin Contacts
J	1500 Cycle Socket Contacts
X	Eyelet contacts, hermetics only

Jam Nut Receptacle (07, 24)

Flange Mounting Plug (09)

Deep Reach Receptacle
Consult Amphenol Aerospace

Solder Mount Hermetic Receptacle (I, 25)

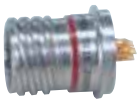

SJTP02RE – Crimp

Box Mounting Receptacle (Back Panel Mounting)

PART NUMBER BUILDER Page 145

Commercial

SJTP02RE

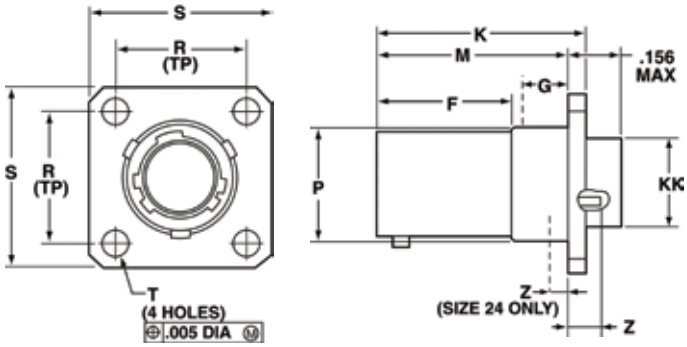

Shell Size	F +.000 –.005	K +.006 –.000	M +.000 –.005	R (TP)	S +.011 –.010	T ±.005	Z ±.031	P Dia. +.001 –.005	KK Dia. +.005 –.002	G Max.
8	.609	.945	.860	.594	.812	.120	.062	.516	.417	.345
10	.609	.945	.860	.719	.938	.120	.062	.633	.538	.345
12	.609	.945	.860	.812	1.031	.120	.062	.802	.663	.345
14	.609	.945	.860	.906	1.125	.120	.062	.927	.787	.345
16	.609	.945	.860	.969	1.219	.120	.062	1.052	.912	.345
18	.609	.945	.860	1.062	1.312	.120	.062	1.177	1.030	.345
20	.609	.945	.860	1.156	1.438	.120	.062	1.302	1.154	.345
22	.609	.945	.860	1.250	1.562	.120	.062	1.427	1.279	.345
24	.750	1.085	1.000	1.375	1.688	.147	.078	1.552	1.404	.452

SJT07RT – Crimp

Jam Nut Receptacle

PART NUMBER BUILDER Page 145

Commercial

SJT07RT

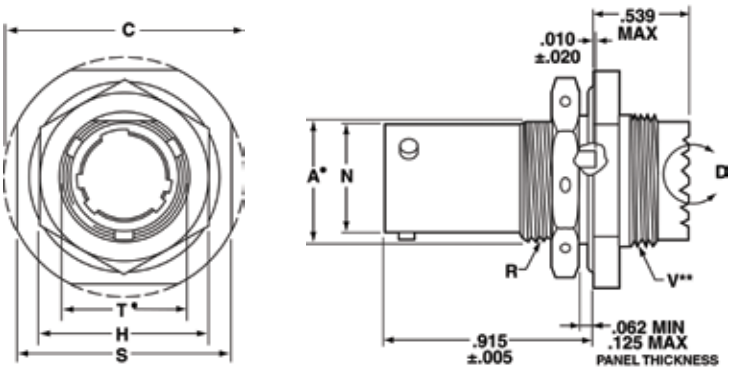

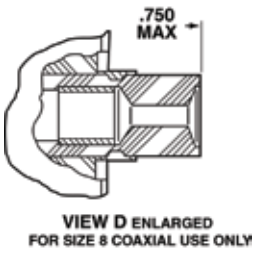

- • "D" shaped panel cut-out dimensions
- ** Oversize threads. Check accessory threads before ordering

Shell Size	A• +.000 –.010	H Hex +.017 –.016	S ±.016	V Thread Class 2A UNEF (Plated)	R Thread Class 2A UNEF (Plated)	N +.001 –.005	C Max.	T• +.010 –.000
8	.542	.750	.938	.5625-24	.5625-24	.473	1.078	.572
10	.669	.875	1.062	.6875-24	.6875-24	.590	1.203	.697
12	.830	1.062	1.250	.8125-20	.8750-20	.750	1.391	.884
14	.955	1.188	1.375	.9375-20	1.0000-20	.875	1.515	1.007
16	1.084	1.312	1.500	1.0625-18	1.1250-18	1.000	1.641	1.134
18	1.208	1.438	1.625	1.1875-18	1.2500-18	1.125	1.766	1.259
20	1.333	1.562	1.812	1.3125-18	1.3750-18	1.250	1.953	1.384
22	1.459	1.688	1.938	1.4375-18	1.5000-18	1.375	2.078	1.507
24	1.580	1.812	2.062	1.4375-18	1.6250-18	1.500	2.203	1.634

All dimensions for reference only.

SJT06RT/SJTG06RT – Crimp

Straight Plug/Straight Plug (with Grounding Fingers)

PART NUMBER BUILDER Page 145

Commercial

SJT06RT
SJTG06RT

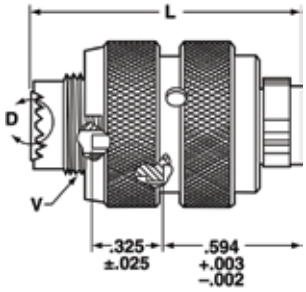

SJT06RT

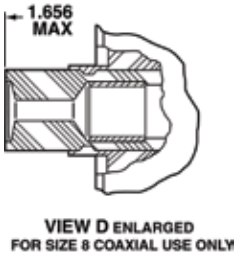

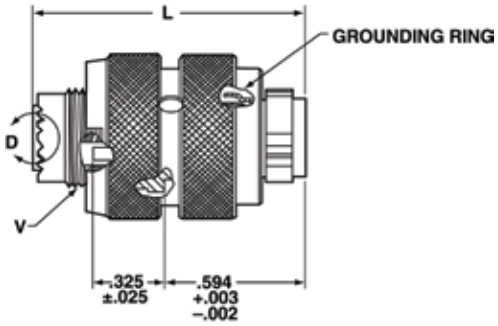

SJTG06RT

Shell Size	L Max	Q Dia. Max.	V Thread Class 2A UNEF (Plated)	V Thread Modified Major Dia.	
8	1.219	.734	.4375-28	.421 –	.417
10	1.219	.844	.5625-24	.542 –	.538
12	1.219	1.016	.6875-24	.667 –	.663
14	1.219	1.141	.8125-20	.791 –	.787
16	1.219	1.265	.9375-20	.916 –	.912
18	1.219	1.391	1.0625-18	1.034 –	1.030
20	1.219	1.500	1.1875-18	1.158 –	1.154
22	1.219	1.625	1.3125-18	1.283 –	1.279
24	1.258	1.750	1.4375-18	1.408 –	1.404

All dimensions for reference only.

SJTIY – Hermetic

Solder Mounting Receptacle

PART NUMBER BUILDER Page 145

Commercial

SJTIY

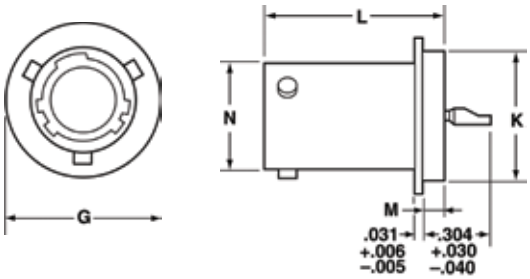

Shell Size	L +.011 –.000	M +.006 –.005	G Dia. +.011 –.010	K Dia. +.001 –.005	N +.001 –.005
8	.789	.125	.687	.562	.473
10	.789	.125	.797	.672	.590
12	.789	.125	.906	.781	.750
14	.789	.125	1.031	.906	.875
16	.789	.125	1.156	1.031	1.000
18	.789	.125	1.281	1.156	1.125
20	.789	.125	1.375	1.250	1.250
22	.821	.156	1.500	1.375	1.375
24	.821	.156	1.625	1.500	1.500

SJT07Y – Hermetic

Jam Nut Receptacle

PART NUMBER BUILDER Page 145

Commercial

SJT07Y

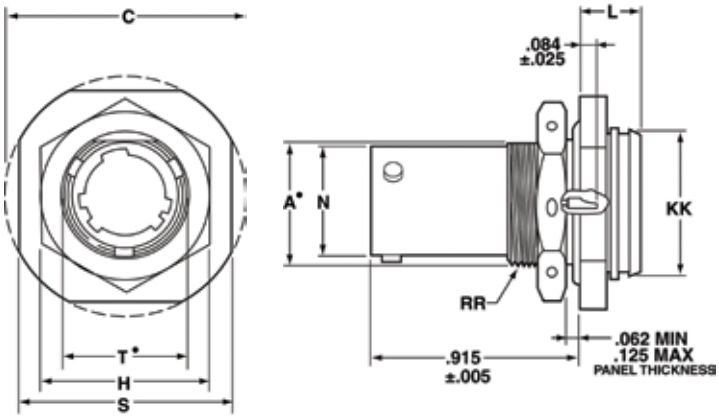

- "D" shaped panel cut-out dimensions

Shell Size	N +.001 –.005	C Max.	A• +.000 –.010	L Max.	H Hex +.017 –.016	S ±.016	KK +.011 –.000	RR Thread Class 2A UNEF (Plated)	T• +.010 –.000
8	.473	1.078	.542	.297	.750	.938	.642	.5625-24	.572
10	.590	1.203	.669	.297	.875	1.062	.766	.6875-24	.697
12	.750	1.391	.830	.297	1.062	1.250	.892	.8750-20	.884
14	.875	1.515	.955	.297	1.188	1.375	1.018	1.0000-20	1.007
16	1.000	1.641	1.084	.297	1.312	1.500	1.142	1.1250-18	1.134
18	1.125	1.766	1.208	.328	1.438	1.625	1.268	1.2500-18	1.259
20	1.250	1.953	1.333	.328	1.562	1.812	1.392	1.3750-18	1.384
22	1.375	2.078	1.459	.328	1.688	1.938	1.518	1.5000-18	1.507
24	1.500	2.203	1.580	.328	1.812	2.062	1.642	1.6250-18	1.634

All dimensions for reference only.

Amphenol Aerospace

E

TABLE OF CONTENTS FOR SECTION E

Design Features 152
Specifications, Alternate Positioning 153
Insert Availability 154
Insert Arrangements 155-156
How to Order 157

SJT SHELL STYLES:

AJ6/AS6 Straight Plug 158
AJ7H/ AS7H Hermetic Jam Nut Receptacle . . . 159
AJ7/ AS7 Jam Nut Receptacle 160
AJOH Hermetic Square Flange Receptacle 161

ACCESSORIES/INSTALLATION SECTION F:

Protection Caps 162
Installation Instructions/ Application Tools 163
Contact Installation 164

Aquacon Immersible Connectors

Design Features

The Amphenol® Aquacon Series of connectors has been designed to provide maximum service in oceanic or fluid immersion applications.

The AJ Aquacon offers the following features:

- 1500 PSI Capability
- "O" Ring Sealing, Thread
- Threaded Coupling
- Visual Mating Indication
- Design Flexibility

STRAIGHT PLUG
AJ6 / AS6

A specially designed aluminum bronze coupling nut and type 316 stainless steel shells resist corrosion and provide a pressure withstanding connector. Positive threaded coupling. "O" rings, and a color band visual indicator assure sealing and proper mating. A rear accessory thread provides for the use of EMI hardware or molding adapters.

HERMETIC
JAM NUT RECEPTACLE
AJ7H/AS7H

NON-HERMETIC
JAM NUT RECEPTACLE
AJ7 / AS7

Aquacon Connectors are available in a straight plug and two receptacle styles (see photos at right), with numerous MIL-DTL-38999 insert patterns

AJ Aquacons use JT (38999 type) inserts that incorporate contact sizes 22D, 22M, 22, 20 or 16. AS Aquacons use SJT (38999 type) inserts that incorporate size 12 contacts.

Hermetically sealed (1 X 10^{-6} cc/sec leakage rate) arrangements are also available.

HERMETIC
SQUARE FLANGE
RECEPTACLE
AJ0H

DESIGN FEATURES OF AQUACON SERIES CONNECTORS

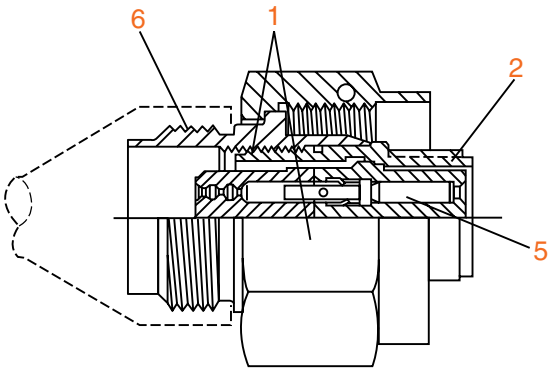

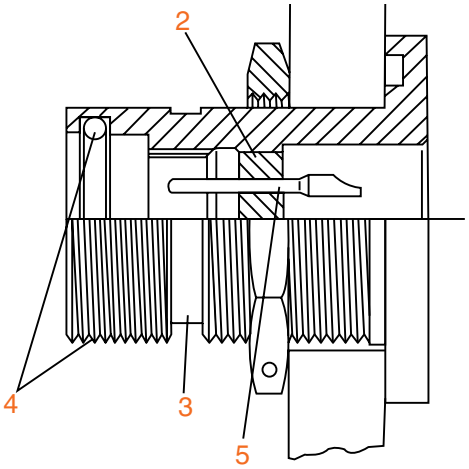

1. Corrosion resistant aluminum bronze coupling nut and stainless steel sleeve
2. Hermetic and non-hermetic inserts in MIL-DTL-38999 patterns. Glass or hard dielectric material.
3. Visual mating indicator
4. 1500 PSI sealing capability assured by threaded coupling and "O" ring
5. Pin or socket contacts in either plug or receptacle
6. Environmental resistant molded cable terminations with or without EMI accessory

Specifications, Alternate Positioning

AQUACON CONTACT RATINGS

Contact Size	Test Current		Maximum Millivolt Drop			Crimp Well Data		Solder Well Data		
	Standard	Hermetic	Crimp	Solder	Solder Hermetic	Diameter	Depth	Diameter		Depth
22M	3	2	30	20	60	.029 ±.001	.141	.029	+.004 –.000	.094
22D	5	–	40	–	–	.0345 ±.001	.141	–		–
22	5	3	40	20	85	.0365 ±.001	.141	.036	+.004 –.000	.094
20	7.5	5	35	20	60	.047 ±.001	.209	.044	+.004 –.000	.125
16	13	10	25	20	85	.067 ±.001	.209	.078	+.004 –.002	.141
12	23	17	25	20	85	.100 ±.002	.209	.116 ±.004		.151

AQUACON SERVICE RATINGS

Service Rating	Suggested Operating Voltage (Sea Level)	
	AC (RMS)	DC
M	400	550
I	600	850
II	900	1250

The establishment of electrical safety factors is left entirely in the designer's hands, as he can best determine what peak voltage, swtiching surges, transients, etc. can be expected in a particular circuit.

ALTERNATE POSITIONING

Alternate positioning of connectors allows connectors with identical insert arrangements to be mounted side by side by providing a positive means of eliminating inadvertent cross-mating or cross- plugging.

Alternate positioning of Aquacon Series is achieved by a rotation of the master key/keyway, relative to the insert, as part of the shell manufacturing operation.

Recommended practice is to use alternate position inserts only when necessary.

AQUACON MASTER KEY/KEYWAY ROTATION

Shell Size	AB Angle of Rotation (Degrees)				
	Normal	A	B	C	D
8	100	82			118
10	100	86	72	128	114
12	100	80	68	132	120
14	100	79	66	134	121
16	100	82	70	130	118
18	100	82	70	130	118
20	100	82	70	130	118
22	100	85	74	126	115
24	100	85	74	126	115

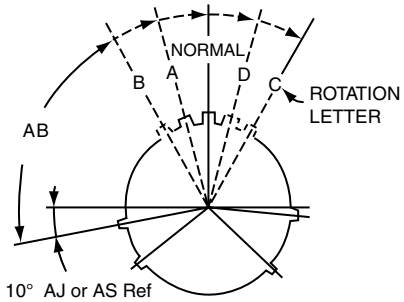

RELATIVE POSSIBLE POSITION OF ROTATED MASTER KEYWAY

(FRONT FACE OF AJ or AS RECEPTACLE SHOWN)

Aquacon Series

Insert Availability

Aquacon Shell Size	Solder	Crimp	Hermetic*	Service Rating**	Total Contacts	Contact Size					
						22D	22M	22	20	16	12
8-3	X		X	M	3				3		
8-6	X	X	X	M	6		6				
8-35		X	X	M	6	6					
8-44		X		M	4			4			
8-98		X	X	I	3				3		
10-5	X	X	X	I	5				5		
10-13	X	X	X	M	13		13				
10-35		X	X	M	13	13					
10-98	X	X	X	I	6				6		
12-3	X	X	X	II	3					3	
12-8	X	X	X	I	8				8		
12-35		X	X	M	22	22					
12-98	X	X	X	I	10				10		
14-5	X	X	X	II	5					5	
14-15	X	X		I	15				14	1	
14-18	X	X	X	I	18				18		
14-35		X	X	M	37	37					
14-37	X	X	X	M	37		37				
16-6†		X	X	I	6						6
16-8	X	X	X	II	8					8	
16-26	X	X	X	I	26				26		
16-35		X	X	M	55	55					
16-55	X	X	X	M	55		55				
18-11	X	X		II	11					11	
18-32	X	X	X	I	32				32		
18-35		X	X	M	66	66					
18-66	X	X	X	M	66		66				
20-1		X		M	79		79				
20-2		X		M	65			65			
20-16	X	X	X	II	16					16	
20-35		X		M	79	79					
20-39	X	X		I	39				37	2	
20-41	X	X	X	I	41				41		
22-2	X	X		M	85			85			
22-21	X	X	X	II	21					21	
22-32	X			I	32				32		
22-35		X		M	100	100					
22-55	X	X	X	I	55				55		
24-19†		X	X	I	19						19
24-24†		X		I	24					12	12
24-35		X		M	128	128					
24-61	X	X		I	61				61		

* Tooled for pin inserts only (contact Amphenol for socket availability).

** See specifications

† AS Aquacon version - these arrangements use SJT (38999 type) patterns that incorporate size 12 contacts. See how to order page 157.

Additional insert arrangements may be made available upon request.

Insert Arrangements

Front face of pin inserts illustrated

Insert Arrangement	8-3	8-6	8-35	8-44	8-98	10-5	10-13	10-35
Service Rating	M	M	M	M	I	I	M	M
Number of Contacts	3	6	6	4	3	5	13	13
Contact Size	20	22M	22D	22	20	20	22M	22D

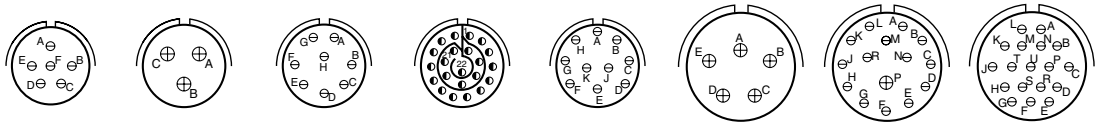

Insert Arrangement	10-98	12-3	12-8	12-35	12-98	14-5	14-15		14-18
Service Rating	I	II	I	M	I	II	I		I
Number of Contacts	6	3	8	22	10	5	14	1	18
Contact Size	20	16	20	22D	20	16	20	16	20

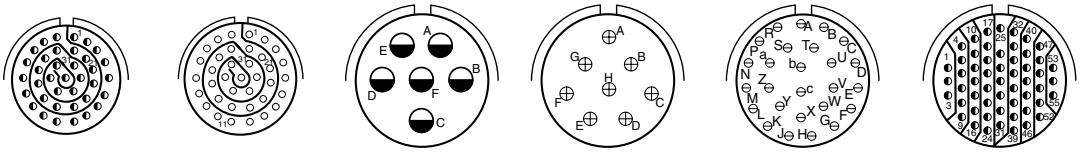

Insert Arrangement	14-35	14-37	16-6†	16-8	16-26	16-35
Service Rating	M	M	I	II	I	M
Number of Contacts	37	37	6	8	26	55
Contact Size	22D	22M	12	16	20	22D

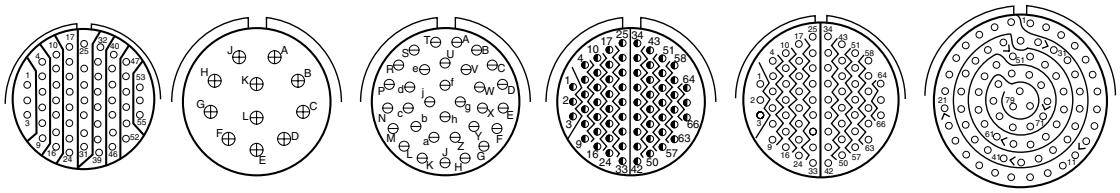

Insert Arrangement	16-55	18-11	18-32	18-35	18-66	20-1
Service Rating	M	II	I	M	M	M
Number of Contacts	55	11	32	66	66	79
Contact Size	22M	16	20	22D	22M	22M

See page 153 for service ratings and contact sizes.

† AS Aquacon version - uses an SJT (38999 type) pattern with size 12 contacts. See how to order page 157.

CONTACT LEGEND

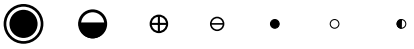

8 12 16 20 22 22M 22D

AJ Aquacon

Insert Arrangements

Front face of pin inserts illustrated

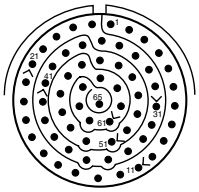
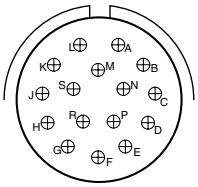
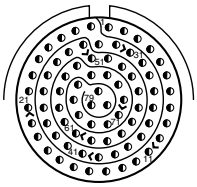
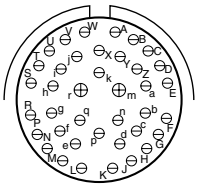
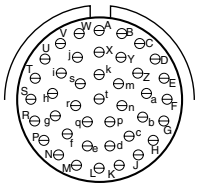

Insert Arrangement	20-2	20-16	20-35	20-39		20-41
Service Rating	M	II	M	I		I
Number of Contacts	65	16	79	37	2	41
Contact Size	22	16	22D	20	16	20

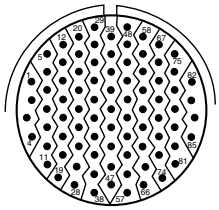
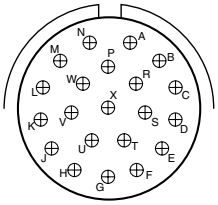
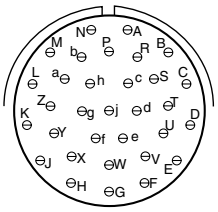
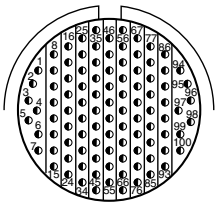
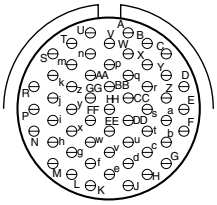

Insert Arrangement	22-2	22-21	22-32	22-35	22-55
Service Rating	M	II	I	M	I
Number of Contacts	85	21	32	100	55
Contact Size	22	16	20	22D	20

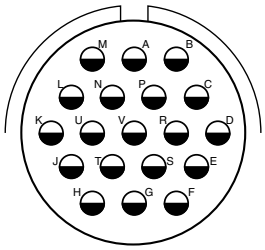
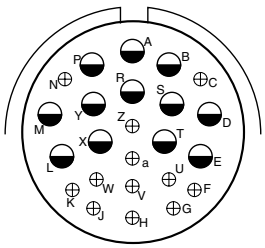
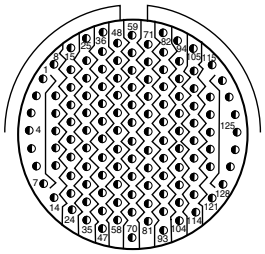
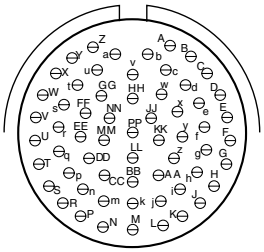

Insert Arrangement	24-19†	24-24†		24-35	24-61
Service Rating	I	I		M	I
Number of Contacts	19	12	12	128	61
Contact Size	12	16	12	22D	20

See page 153 for service ratings and contact sizes.
† AS Aquacon version - uses an SJT (38999 type) pattern with size 12 contacts. See how to order page 157.

CONTACT LEGEND

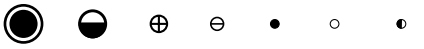

8 12 16 20 22 22M 22D

How to Order

1. Connector & Shell Style	2. Contact Type	3. Shell Size – Insert Arrangement	4. Contact Configuration	5. Insert Rotation	6. Special Variation
AJ6	R -	20-41	S	A	(445)

CONNECTOR TYPE & STYLE		AQUACON IMMERSIBLE CONNECTORS: Aquacon with JT (38999 Type) Inserts	AQUACON IMMERSIBLE CONNECTORS: Aquacon with SJT (38999 Type) inserts- size 12 contacts only
Receptacle Crimp	Jam Nut Receptacle	AJ7	AS7
Plugs	Straight Plug	AJ6	AS6
Fused compression glass sealed inserts. Leakage rate less than 1.0x10-6 cc/sec at 15 psi differential; with interfacial seal.			
Hermetic	Jam Nut Receptacle	AJ7	AS7
Hermetic	Square Flange	AJ0	

2. CONTACT TYPE

Receptacle	
C	Non-Removable Solder Termination
R	Removable Crimp Termination
H	Hermetic (Glass Seal) Solder Termination (Receptacles only)
Plug	
C	Non-Removable Solder Termination

5. ALTERNATE POSITIONING

Alternate positioning of Aquacon Series is achieved by a rotation of the master key/keyway, relative to the insert, as part of the shell manufacturing operation.
Recommended practice is to use alternate position inserts only when necessary.

AQUACON MASTER KEY/KEYWAY ROTATION

Shell Size	AB Angle of Rotation (Degrees)				
	Normal	A	B	C	D
8	100	82			118
10	100	86	72	128	114
12	100	80	68	132	120
14	100	79	66	134	121
16	100	82	70	130	118
18	100	82	70	130	118
20	100	82	70	130	118
22	100	85	74	126	115
24	100	85	74	126	115

3. SELECT A SHELL SIZE & INSERT ARRANGEMENT SEE PAGES 2-5

Shell Size & Insert Arrangements are on pages 2-5. First number represents Shell Size, second number is the Insert Arrangement.

4. CONTACTS

P	Pin Contacts
S	Socket Contacts

Hermetics are available only in pin contacts.

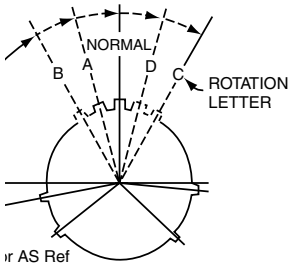

ır AS Ref

LATIVE POSSIBLE POSITION OF ROTATED MASTER KEYWAY

ſ FACE OF AJ or AS RECEPTACLE SHOWN)

6. SPECIAL VARIATIONS

(168)	Rear Accessory Thread for Non-Hermetic Jam Nut Receptacle only.
(445)	Hex Coupling and Rear Accessory Threads for Straight Plug only.

Consult Amphenol Aerospace for other options and special variations available.
See how to order protection caps on page 162.

AJ6 / AS6 Aquacon

Straight Plug

PART NUMBER BUILDER Page 157

Commercial

AJ6X-
AS6X-

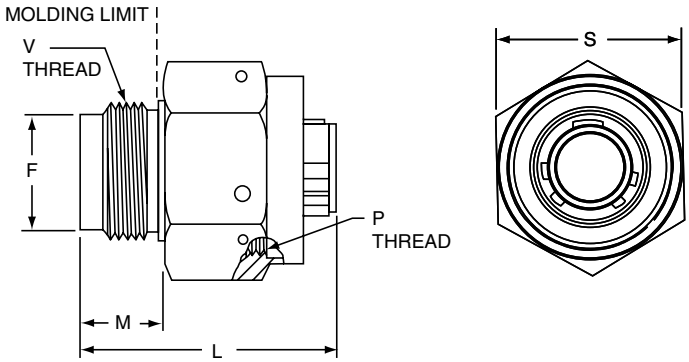

AJ6X-XX-XXX(445)

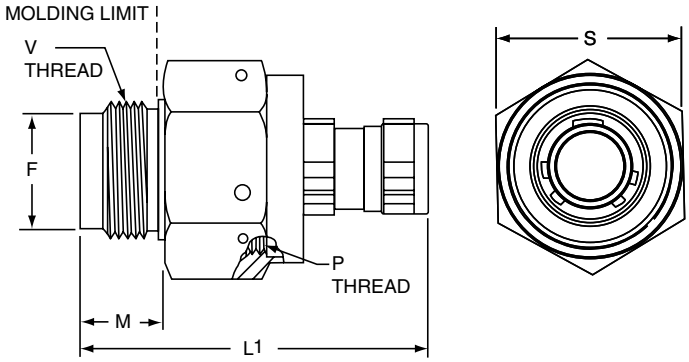

AS6X-XX-XXX(445)

AJ Aquacons use JT (38999 type) inserts that incorporate contact sizes 22D, 22M, 22, 20 or 16. AS Aquacons use SJT (38999 type) inserts that incorporate size 12 contacts

Shell Size	F Dia. +.000 –.005	L Max. (AJ)	L1 Max. (AS)	M ±.010	P Thread Class 2B	S Hex ±.016	V Thread Class 2A UNEF
8	.477	1.067	1.430	.360	.750-20 UNEF	.875	.5625-24
10	.602	1.067	1.430	.360	.875-20 UNEF	1.000	.6875-24
12	.727	1.062	1.430	.360	1.000-20 UNEF	1.125	.8125-20
14	.852	1.062	1.430	.360	1.125-18 UNEF	1.250	.9375-20
16	.977	1.062	1.430	.360	1.250-18 UNEF	1.375	1.0625-18
18	1.102	1.062	1.430	.360	1.375-18 UNEF	1.500	1.1875-18
20	1.227	1.312	1.680	.610	1.500-18 UNEF	1.625	1.3125-18
22	1.352	1.312	1.680	.610	1.625-18 UNEF	1.750	1.4375-18
24	1.477	1.312	1.680	.610	1.750-18 UNS	1.875	1.5625-18

All dimensions for reference only.

AJ7H / AS7H Aquacon

Hermetic Jam Nut Receptacle

PART NUMBER BUILDER Page 157

Commercial

AJ7H-
AS7H-

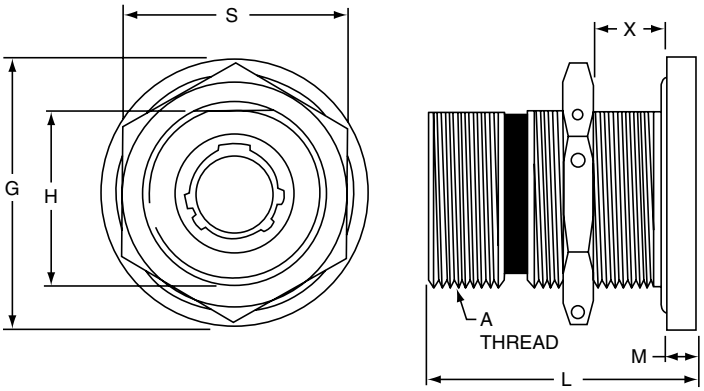

AJ7H-XX-XXX(XXX)

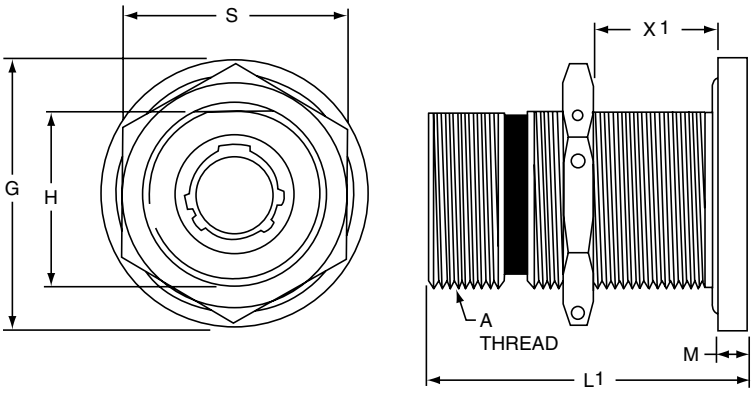

AS7H-XX-XXX(XXX)

AJ Aquacons use JT (38999 type) inserts that incorporate contact sizes 22D, 22M, 22, 20 or 16. AS Aquacons use SJT (38999 type) inserts that incorporate size 12 contacts

Shell Size	A Thread Class 2A	G Dia.	H +.000 –.000	L ±.010 (Hermetic AJ)	L1 +.000 –.010 (Hermetic AS)	M	S Hex ±.016	X Bulkhead Thickness (AJ)	X1 Bulkhead Thickness (AS)
8	.750-20 UNEF	1.125	.700	1.125	1.500	.125	.938	.03 – .31	.06 – .72
10	.875-20 UNEF	1.250	.825	1.125	1.500	.125	1.062	.03 – .31	.06 – .72
12	1.000-20 UNEF	1.406	.950	1.125	1.500	.125	1.188	.03 – .31	06 – .72
14	1.125-18 UNEF	1.531	1.075	1.125	1.500	.125	1.312	.03 – .31	06 – .72
16	1.250-18 UNEF	1.654	1.200	1.125	1.500	.125	1.438	.03 – .31	06 – .72
18	1.375-18 UNEF	1.844	1.325	1.125	1.500	.125	1.562	.03 – .31	06 – .72
20	1.500-18 UNEF	2.000	1.450	1.250	1.500	.188	1.688	.03 – .38	06 – .65
22	1.625-18 UNEF	2.125	1.575	1.250	1.500	.188	1.812	.03 – .38	06 – .65
24	1.750-18 UNS	2.250	1.700	1.250	1.500	.188	2.000	.03 – .38	06 – .65

All dimensions for reference only.

AJ7 / AS7 Aquacon

Jam Nut Receptacle

PART NUMBER BUILDER Page 157

Commercial

AJ7X-
ASJX-

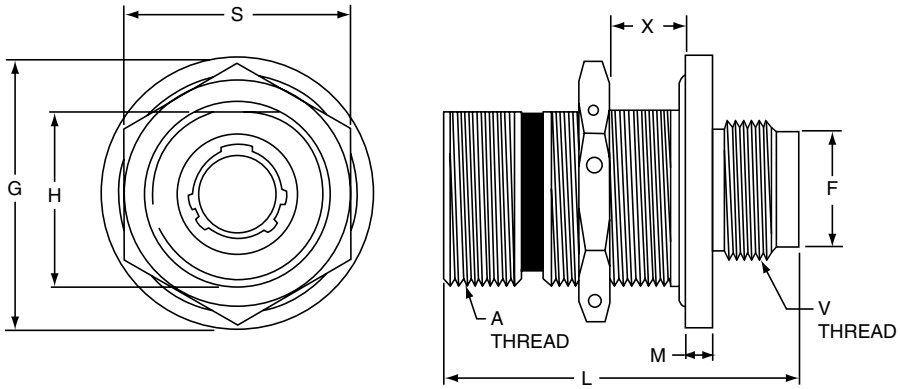

AJ7X-XX-XXX(168)

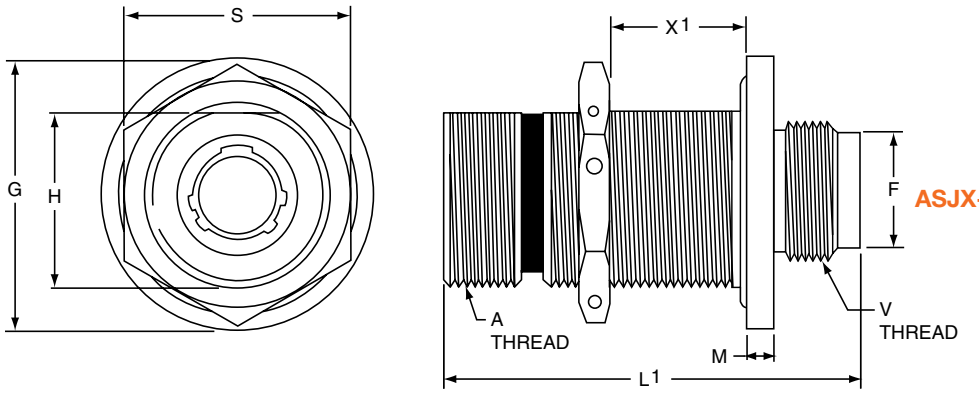

ASJX-XX-XXX(168)

AJ Aquacons use JT (38999 type) inserts that incorporate contact sizes 22D, 22M, 22, 20 or 16. AS Aquacons use SJT (38999 type) inserts that incorporate size 12 contacts

Shell Size	A Thread Class 2A	F +.000 –.005	G Dia.	H +.000 –.005	L ±.010 (AJ)	L1 +.000 –.010 (AS)	M	S Hex ±.016	V Thread Class 2A UNEF	X Bulkhead Thickness (AJ)	X1 Bulkhead Thickness (AS)
8	.750-20 UNEF	.477	1.125	.700	1.484	1.750	.125	.938	.5625-24	.03 – .31	.03 – .58
10	.875-20 UNEF	.602	1.250	.825	1.484	1.750	.125	1.062	.6875-24	.03 – .31	.03 – .58
12	1.000-20 UNEF	.727	1.406	.950	1.484	1.750	.125	1.188	.8125-20	.03 – .31	.03 – .58
14	1.125-18 UNEF	.852	1.531	1.075	1.484	1.750	.125	1.312	.9375-20	.03 – .31	.03 – .58
16	1.250-18 UNEF	.977	1.654	1.200	1.484	1.750	.125	1.438	1.0625-18	.03 – .31	.03 – .58
18	1.375-18 UNEF	1.102	1.844	1.325	1.484	1.750	.125	1.562	1.1875-18	.03 – .31	.03 – .58
20	1.500-18 UNEF	1.227	2.000	1.450	1.609	1.750	.188	1.688	1.3125-18	.03 – .38	.03 – .50
22	1.625-18 UNEF	1.352	2.125	1.575	1.609	1.750	.188	1.812	1.4375-18	.03 – .38	.03 – .50
24	1.750-18 UNS	1.477	2.250	1.700	1.609	1.750	.188	2.000	1.5625-18	.03 – .38	.03 – .50

All dimensions for reference only.

AJ0H Aquacon

Hermetic Square Flange Receptacle

PART NUMBER BUILDER Page 157

Commercial

AJOH-

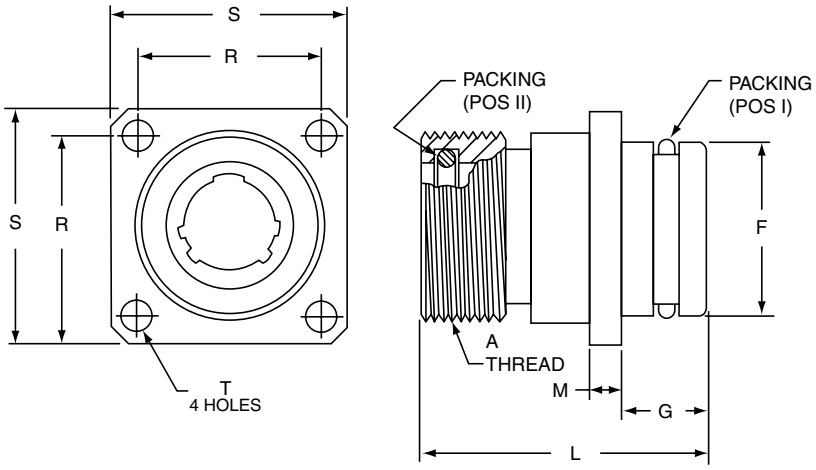

AJ0H-XX-XXX(XXX)

The Aquacon Hermetic Square Flange Receptacle is available in AJ style only which incorporates contact sizes 22D, 22M, 22, 20 or 16.

Shell Size	A Thread Class 2A	F Dia. +.000 –.001	G ±.030	L	M	R	S	T ±.005	Packing Pos I Part Number	Packing Pos II Part Number
8	.750-20 UNEF	.685	.344	1.125	.125	.719	.938	.128	10-90351-15	10-90351-14
10	.875-20 UNEF	.810	.344	1.125	.125	.812	1.031	.128	10-90351-17	10-90351-16
12	1.000-20 UNEF	.935	.344	1.125	.125	.906	1.125	.128	10-90351-19	10-90351-18
14	1.125-18 UNEF	1.060	.344	1.125	.125	.969	1.219	.128	10-90351-21	10-90351-20
16	1.250-18 UNEF	1.185	.344	1.125	.125	1.062	1.312	.128	10-90351-23	10-90351-22
18	1.375-18 UNEF	1.248	.344	1.125	.125	1.156	1.438	.128	10-90351-24	10-90351-24
20	1.500-18 UNEF	1.373	.375	1.219	.188	1.250	1.562	.128	10-90351-26	10-90351-26
22	1.625-18 UNEF	1.498	.375	1.219	.188	1.375	1.688	.147	10-90351-28	10-90351-28
24	1.750-18 UNS	1.623	.375	1.219	.188	1.500	1.812	.147	10-90351-29	10-90351-29

All dimensions for reference only.

Aquacon Series

Protection Caps

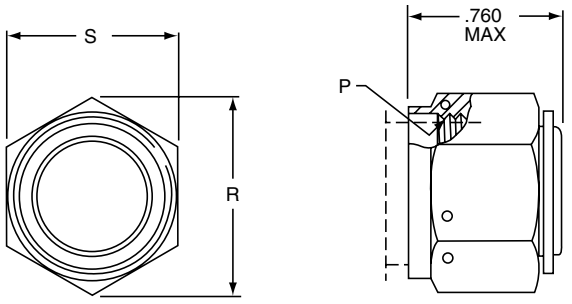

RECEPTACLE PROTECTION CAP 10-377664-XX

Shell Size	P Thread Class 2A	R Ref.	S Hex +.005 –.010
8	.750-20 UNEF	1.010	.875
10	.875-20 UNEF	1.155	1.000
12	1.000-20 UNEF	1.299	1.125
14	1.125-18 UNEF	1.443	1.250
16	1.250-18 UNEF	1.588	1.375
18	1.375-18 UNEF	1.732	1.500
20	1.500-18 UNEF	1.876	1.625
22	1.625-18 UNEF	2.021	1.750
24	1.750-18 UNS	2.165	1.875

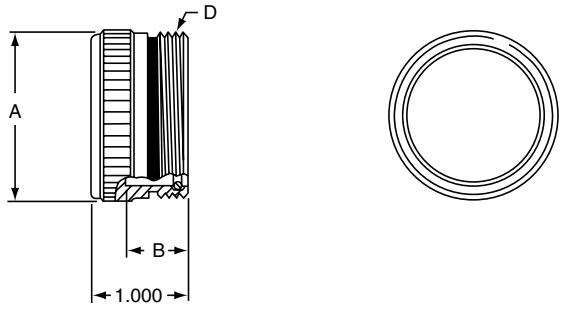

PLUG PROTECTION CAP 10-399623-XX

Shell Size	A Dia. Max.	B +.031 –.000	D Thread Class 2A
8	.771	.625	.750-20 UNEF
10	.898	.625	.875-20 UNEF
12	1.010	.625	1.000-20 UNEF
14	1.137	.625	1.125-18 UNEF
16	1.264	.625	1.250-18 UNEF
18	1.392	.625	1.375-18 UNEF
20	1.519	.688	1.500-18 UNEF
22	1.646	.688	1.625-18 UNEF
24	1.744	.688	1.750-18 UNS

All dimensions for reference only.

HOW TO ORDER PROTECTION CAPS

Protection Cap Style		Cap Size (Correlates to Connector Shell Size)
For Receptacle Connector	10-377664 -	20
For Plug Connector	10-399623 -	20

Installation Instructions, Application Tools

MOLDING

Suggested method of assembly to cable for Aquacon plugs and cable connecting receptacles is molding. The mold sealing diameter has been designed to use a common mold for both plug and receptacle in a given shell size.

SEALING

In a mated condition, the red visual mating indicator band must be fully concealed by the plug coupling nut to assure to reliable, pressure rated sealed joint. Failure to fully tighten the coupling nut may allow leakage through the main joint seal. The red visual mating indicator is so located that only a full and proper mating of the plug and receptacle will cause the indicator to be fully hidden by the plug coupling nut.

Red Visual Mating Indicator Band

MOUNTING SURFACES

The integrity of an "O" ring hydrostatic shell is dependent upon the flatness of the surface on which the receptacle is mounted. Surface finishes of 23 microns or less are recommended for "O" ring sealing areas when jam nut or through bulkhead receptacles are mounted.

MOUNTING CUTOUTS

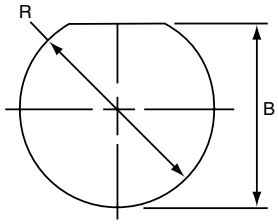

Rear mount jam nut

Shell Size	B +.010 –.000	R +.010 –.000
8	.705	.759
10	.830	.884
12	.955	1.007
14	1.080	1.134
16	1.205	1.259
18	1.330	1.384
20	1.455	1.507
22	1.580	1.634
24	1.705	1.759

RECEPTACLE "O" RING RACKING REQUIREMENTS ARP 568 UNIFORM DASH NUMBER

Shell Size	Main Joint Seal	Shell to Mounting Surface Seal
		Jam Nut
8	ARP-014	ARP-019
10	ARP-016	ARP-021
12	ARP-018	ARP-023
14	ARP-020	ARP-025
16	ARP-022	ARP-027
18	ARP-024	ARP-029
20	ARP-026	ARP-030
22	ARP-028	ARP-031
24	ARP-029	ARP-032

CONVERSION TABLE SALT WATER DEPTH TO HYDROSTATIC PRESSURE

Salt-Water Depth in Feet	Pounds per Sq. Inch	Salt-Water Depth in Feet	Pounds per Sq. Inch
10	4	2,000	890
25	11	2,500	1,113
50	22	3,000	1,335
75	33	4,000	1,780
100	45	5,000	2,225
200	89	6,000	2,670
250	111	7,000	3,115
300	134	7,500	3,338
400	178	8,000	3,560
500	223	9,000	4,005
600	267	10,000	4,450
750	334	15,000	6,675
800	356	20,000	8,900
1,000	445	25,000	11,125

APPLICATION TOOLING

Contact Size	Crimping Tool	Positioner	Insertion Tool*	Removal Tool*	Sealing Plug*	Color Code	Reference Publication
22M	M22520/2-01	M22520/2-09†	11-8674-24††	11-8675-24††	10-405996-22	Black	L-624
22D	M22520/2-01	M22520/2-09†	11-8674-24††	11-8675-24††	10-405996-22	Black	
22	M22520/2-01	M22520/2-09†	11-8674-22††	11-8675-22††	10-405996-22	Black	
20	M22520/1-01	M22520/1-04	11-8674-20††	11-8675-20††	10-405996-20	Red	
16	M22520/1-01	M22520/1-04	11-8674-16††	11-8675-16††	10-405996-16	Blue	
12	M22520/1-01	M2520/1-04	11-8674-12††	11-8675-12††	10-405996-12	Yellow	

* Amphenol Part Numbers
† Pin only. Use M22520/2-06 for socket contacts.
†† Contact Daniels Manufacturing Co. or Astro Tool Corp. for availability.
** Available online at www.amphenol-aerospace.com/termination instructions

Contact Installation

CONTACT INSTALLATION

WIRE AND CABLE PREPARATION

1. Cut wire or cable to desired length. Strip insulation from end of wire in accordance with the following table. Hot wire stripping methods are recommended. Avoid nicking or cutting wire strands.

WIRE STRIP LENGTH IN INCHES

Contact Type	Contact Size					
	22M	22D	22	20	16	12
Solder	1/8	–	1/8	5/32	5/32	
Crimp	1/8 – 5/32			7/32 – 1/4		

SOLDER CONTACT TERMINATION

1. Clean conductors and pre-tin with a good grade 60/40 tin-lead solder to 1/16 inch.
2. Pre-tin contact solder well.
3. With connector in a suitable holding device, solder wells facing operator, and the cutaway portion of the wells up, insert pre-tinned conductor into contact well. Apply heat to closed side of wire well to make joint. Remove heat and allow joint to cool.
4. A resistance soldering unit of approximately 125 watts is recommended. If a soldering iron is used, do not exceed 20 watts for size 22M, 22D and 22 contacts; 80 watts for size 20: and 150 watts for size 16 and 12 contacts.
5. Wipe or brush excess flux from terminations.

CRIMP CONTACT TERMINATION

1. Select proper crimping tool and positioner from Application Tooling table on previous page.
2. Position wire in wire well. Wire must be visible in the inspection hole provided.
3. With the wire in place, insert the contact fully into the crimping tool. Squeeze the crimping tool handles to the full extent of their travel. The recommended crimping tools are the “full cycling” type and will not release until a complete crimp is made. Release pressure on handles and remove the completed crimped contact/ wire assembly.

CONTACT INSERTION

1. Select proper insertion tool from Application Tooling table on previous page.
2. With contact/wire assembly properly positioned in the insertion tool, push forward, directly in line with the grommet hole, until the contact is felt to snap into place.
3. Remove insertion tool.
   All unused contact positions must be filled with uncrimped contacts. In addition, sealing plugs (see Application Tooling table) should be inserted in all unused grommet holes.

CONTACT REMOVAL

1. Select proper removal tool from Application Tooling table on previous page.
2. Carefully insert removal tool until contact to be removed is released. Aquacon contacts are rear release, rear removable.
3. Remove contact.

Accessories and Tools for MIL-DTL-38999 Series III, II, I and SJT

Amphenol Aerospace

F

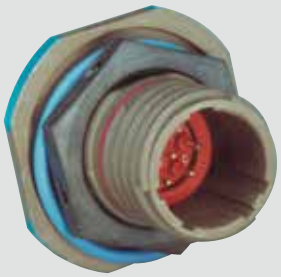

TABLE OF CONTENTS FOR SECTION F

Accessories for MIL-DTL-38999 Connectors

MIL-DTL-38999 Backshells 166

(Refers to Backshell Section from Amphenol PCD)

Protection Caps for Series III 167, 168

Dummy Receptacles for Series III 169

Cable Clamps for Series III. 170

Accessories for Series III Breakaway Connectors 171

Protection Caps for Series II 172, 173

Strain Reliefs for Series II, I 174

Protection Caps for Series I 175, 176

Strain Reliefs for Series I 177

Protection Caps for SJT. 178

Dummy Receptacles & Cable Clamps for SJT. 179

Header Assemblies for Series III, II, I 180, 181

Application Tools (Crimp, Insertion, Removal) for Series III, II, I, SJT 182

Assembly Instructions for Series III, II, I, SJT 183, 184

MIL-DTL-38999 Backshells

Amphenol offers a full range of accessories that are designed to enhance the performance of Amphenol 38999 connectors, both military and non-military.

Backshells are an integral part of any circular connector when it comes to reliable cable connections. Amphenol divisions team up globally to provide a very large assortment of backshells for use with 38999 Series of connectors, as well as other circular series.

This Accessories and Tools section covers what is offered from Amphenol Aerospace, Sidney, NY. For MIL-DTL-38999 Series III, II, I and SJT (reference table of contents on preceding page).

The section of this catalog called "Backshells" covers the backshell and adapters that are provided through the Amphenol PCD/Amphenol India divisions. Please refer to this section for:

- Backshells for Connector Family "L", which includes MIL-DTL-38999 Series III and Series IV
- Backshells for Connector Family "K", which includes MIL-DTL-38999 Series I and Series II
- Backshells for Connector Family "J", which includes MIL-DTL-24682 (Matrix, Series 2), MIL-DTL-5015 (Matrix, MS3400 Series), MIL-DTL-83723 (Series I & III), MIL-DTL-81703 (Series III)

The variety of types of backshells and adapters covered in the Backshells section of this catalog include:

- Non-environmental backshells
- Environmental backshells
- Non-environmental EMI/RFI backshells
- Environmental EMI/RFI backshells
- Shrink boot adapters
- Crimp ring adapters
- Band lock adapters
- Pre-shield adapters

For more information contact:
Amphenol Aerospace: www.amphenol-aerospace.com (phone: 800-678-0141)
or visit www.backshellworld.com or email: sales@backshellworld.com

MIL-DTL-38999, Series III TV

Receptacle Protection Cap

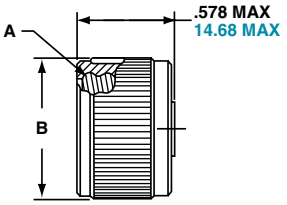

*10-553310-XXX

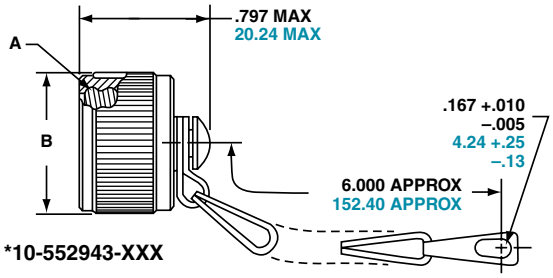

*10-552943-XXX

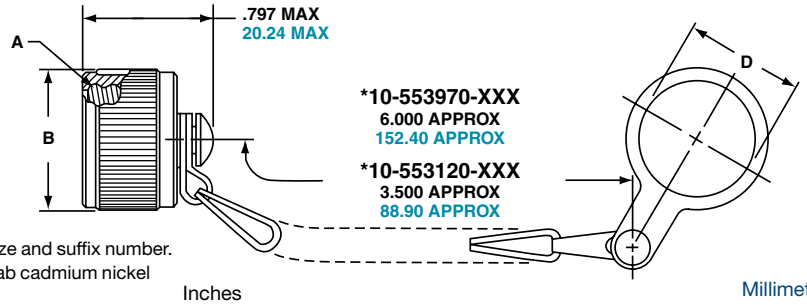

* To complete order number, add shell size and suffix number. For example, shell size 11 with olive drab cadmium nickel base, 10-552943-119

Inches

Shell Size	A Thread Class 2B 0.1P-0.3L-TS	B Dia. Max.	D Dia. +.010 –.000
9	.6250	.875	.703
11	.7500	1.000	.844
13	.8750	1.125	1.016
15	1.0000	1.250	1.141
17	1.1875	1.438	1.266
19	1.2500	1.500	1.391
21	1.3750	1.625	1.516
23	1.5000	1.750	1.641
25	1.6250	1.875	1.766

All dimensions for reference only.

Millimeters

Shell Size	MS Shell Size Code	B Dia. Max.	D Dia. +.25 –.00
9	A	22.23	17.86
11	B	25.40	21.44
13	C	28.58	25.81
15	D	31.75	28.98
17	E	36.53	32.16
19	F	38.10	35.33
21	G	41.28	38.51
23	H	44.45	41.68
25	J	47.63	44.86

TV SERIES III MS METAL PROTECTION CAPS

Shell Size	MS Shell Size Code	MS Receptacle Protection Cap
9	A	D38999/33W9X*
11	B	D38999/33W11X*
13	C	D38999/33W13X*
15	D	D38999/33W15X*
17	E	D38999/33W17X*
19	F	D38999/33W19X*
21	G	D38999/33W21X*
23	H	D38999/33W23X*
25	J	D38999/33W25X*

* To complete order number, replace X with applicable letter as follows:

R - designates eyelet type

N - designates washer type

MS metal protection caps are supplied with service class W which designates corrosion resistant olive drab cadmium plate aluminum.

Consult Amphenol Aerospace for more detailed information on ordering MS Metal protection caps.

Finish	10-No Suffix
Olive Drab, Cadmium, Nickel base	-XX9
Electroless Nickel	-XXG

Consult Amphenol Aerospace for availability of stainless steel protection caps.

TV SERIES III PLASTIC PROTECTION CAPS

Shell Size	Receptacle
9	10-70500-10
11	10-70500-12
13	10-70500-14
15	10-70500-16
17	10-70500-19
19	10-70500-20
21	10-70500-22
23	10-70500-24
25	10-70524-1

MIL-DTL-38999, Series III TV

Plug Protection Cap

*10-552944-XXX

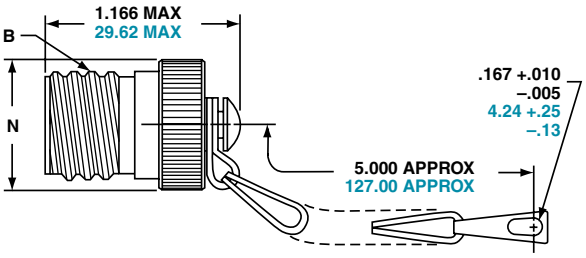

*10-553998-XXX

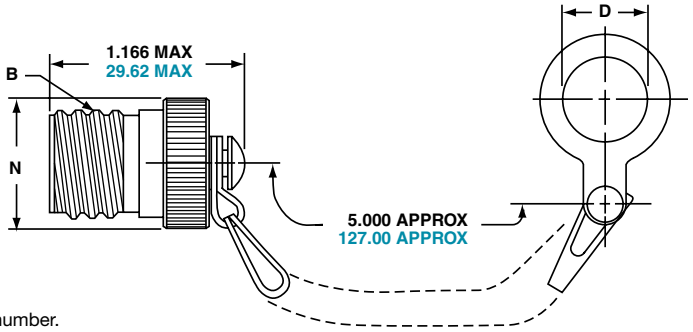

* To complete order number, add shell size and suffix number. For example, shell size 11 with olive drab cadmium nickel base, 10-552944-119

Inches

Shell Size	A Thread Class 2B 0.1P-0.3L-TS	D Dia. +.010 –.000	N Dia. Max.
9	.6250	.516	.895
11	.7500	.641	1.000
13	.8750	.766	1.171
15	1.0000	.891	1.299
17	1.1875	1.016	1.436
19	1.2500	1.141	1.543
21	1.3750	1.266	1.670
23	1.5000	1.343	1.787
25	1.6250	1.516	1.914

Millimeters

Shell Size	MS Shell Size Code	D Dia. +.25 –.00	N Dia. Max.
9	A	13.11	22.73
11	B	16.28	25.40
13	C	19.46	29.74
15	D	22.63	32.99
17	E	25.81	36.47
19	F	28.98	39.19
21	G	32.16	42.42
23	H	34.11	45.39
25	J	38.51	48.62

All dimensions for reference only.

TV SERIES III MS METAL PROTECTION CAPS

Shell Size	MS Shell Size Code	MS Plug Protection Cap
9	A	D38999/32W9X*
11	B	D38999/32W11X*
13	C	D38999/32W13X*
15	D	D38999/32W15X*
17	E	D38999/32W17X*
19	F	D38999/32W19X*
21	G	D38999/32W21X*
23	H	D38999/32W23X*
25	J	D38999/32W25X*

* To complete order number, replace X with applicable letter as follows:

R - designates eyelet type

N - designates washer type

MS metal protection caps are supplied with service class W which designates corrosion resistant olive drab cadmium plate aluminum.

Consult Amphenol Aerospace for more detailed information on ordering MS Metal protection caps.

Finish	10-No Suffix
Olive Drab, Cadmium, Nickel base	-XX9
Electroless Nickel	-XXG

Consult Amphenol Aerospace for availability of stainless steel protection caps.

TV SERIES III PLASTIC PROTECTION CAPS

Shell Size	Plug
9	10-70506-14
11	10-70506-16
13	10-70500-18
15	10-70500-20
17	10-70500-22
19	10-70500-24
21	10-70524-1
23	10-70506-28
25	10-70500-28

Dummy Receptacle

PART NUMBER REFERENCE.
SEE NOTE BELOW TO COMPLETE.

***10-553974-XXX**

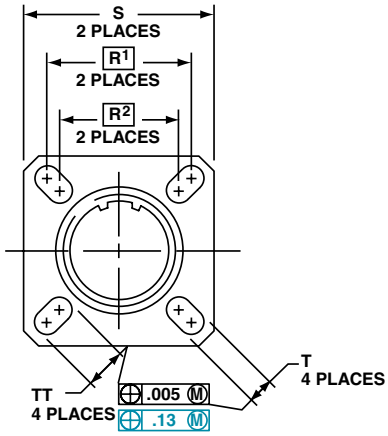

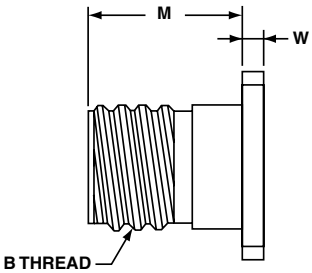

* To complete order number, add shell size and suffix number. For example, shell size 11 with olive drab cadmium nickel base, 10-553974-119

Inches

Shell Size	MS Shell Size Coded	B Thread 0.1P-0.3L-TS (Plated)	M +.020 –.000	R1	R2	S ±.010	T ±.008 –.006	W ±.010	TT ±.008 –.006
9	A	.6250	.822	.719	.594	.938	.128	.098	.216
11	B	.7500	.822	.812	.719	1.031	.128	.098	.194
13	C	.8750	.822	.906	.812	1.125	.128	.098	.194
15	D	1.0000	.822	.969	.906	1.219	.128	.098	.173
17	E	1.1875	.822	1.062	.969	1.312	.128	.098	.194
19	F	1.2500	.822	1.156	1.062	1.438	.128	.098	.194
21	G	1.3750	.791	1.250	1.156	1.562	.128	.125	.194
23	H	1.5000	.791	1.375	1.250	1.688	.154	.125	.242
25	J	1.6250	.791	1.500	1.375	1.812	.154	.125	.242

Finish	10-No Suffix
Olive Drab, Cadmium, Nickel Base	-XX9
Electroless Nickel	-XXG

Millimeters

Shell Size	MS Shell Size Coded	M +.51 –.00	R1	R2	S ±.25	T +.20 –.15	W ±.25	TT +.20 –.15
9	A	20.88	18.26	15.09	23.83	3.25	2.49	5.49
11	B	20.88	20.62	18.26	26.19	3.25	2.49	4.93
13	C	20.88	23.01	20.62	28.58	3.25	2.49	4.93
15	D	20.88	24.61	23.01	30.96	3.25	2.49	4.93
17	E	20.88	26.97	24.61	33.32	3.25	2.49	4.93
19	F	20.88	29.36	26.97	36.53	3.25	2.49	4.93
21	G	20.09	31.75	29.36	39.67	3.25	3.18	4.93
23	H	20.09	34.93	31.75	42.88	3.91	3.18	6.15
25	J	20.09	38.10	34.93	46.02	3.91	3.18	6.15

All dimensions for reference only.

Designates true position dimensioning.

MIL-DTL-38999, Series III TV

Cable Clamps

Straight Style
***10-552681-XXX metal coupling**

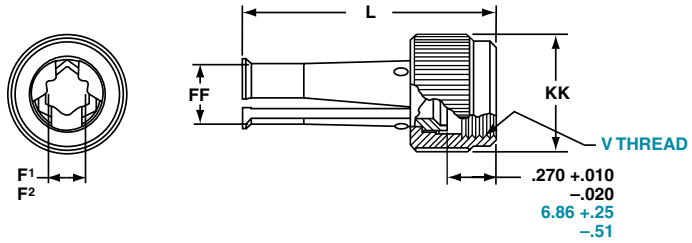

90 Degree Elbow Style
***10-552682-XXX metal coupling**

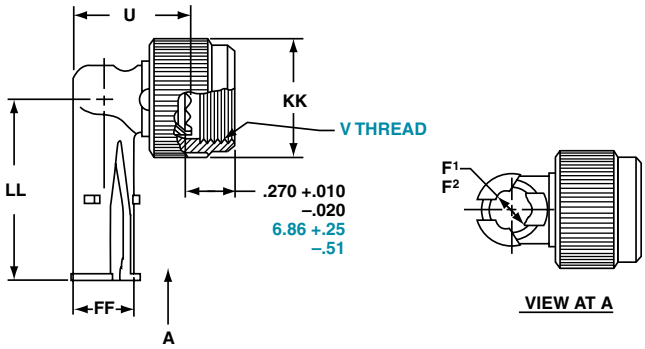

* To complete order number, see suffix chart below. Examples: Clamp with metal coupling nut for shell size 11 with olive drab cadmium nickel base, 10-552681-119.

Inches

Shell Size	MS Shell Size Code	F[1] Min. Dia. Cable	F[2] Max. Dia. Cable	L Max.	U Max.	FF Dia. Max.	KK Dia. Max.	LL Max.
9	A	.094	.203	1.431	.656	.347	.629	1.015
11	B	.141	.250	1.431	.688	.394	.756	1.062
13	C	.172	.323	1.431	.750	.467	.883	1.125
15	D	.203	.422	1.431	.859	.566	1.011	1.328
17	E	.234	.500	1.431	.937	.644	1.138	1.392
19	F	.265	.562	1.431	1.000	.706	1.265	1.453
21	G	.297	.625	1.492	1.062	.769	1.393	1.609
23	H	.328	.703	1.492	1.141	.847	1.488	1.656
25	J	.359	.765	1.492	1.203	.909	1.616	1.719

Finish	10-No Suffix
Olive Drab, Cadmium Nickel Base	-XX9
Electroless Nickel	-XXG

Millimeters

Shell Size	MS Shell Size Code	F[1] Min. Dia. Cable	F[2] Max. Dia. Cable	L Max.	U Max.	V Thread Metric	FF Dia. Max.	KK Dia. Max.	LL Max.
9	A	2.39	5.16	36.35	16.66	M12X1-6H	8.81	15.98	25.78
11	B	3.58	6.35	36.35	17.48	M15X1-6H	10.01	19.20	26.97
13	C	4.37	8.20	36.35	19.05	M18X1-6H	11.86	22.43	28.58
15	D	5.16	10.72	36.35	21.82	M22X1-6H	14.38	25.68	33.73
17	E	5.94	12.70	36.35	23.80	M25X1-6H	16.36	28.91	35.36
19	F	6.73	14.27	36.35	25.40	M28X1-6H	17.93	32.13	36.91
21	G	7.54	15.88	37.90	26.97	M31X1-6H	19.53	35.38	40.87
23	H	8.83	17.86	37.90	28.98	M34X1-6H	21.51	37.80	42.06
25	J	9.12	19.43	37.90	30.56	M37X1-6H	23.09	41.05	43.66

38999, Series III TV Breakaway Fail Safe

Backshells, Dummy Contacts, Wire Combs

Amphenol Aerospace

Amphenol offers a full range of accessories that are designed to enhance the performance of Amphenol Breakaway connectors.

Low Profile Backshells in shell size 25 with the following features:

- Olive drab cadmium finish
- 90 degree termination
- Low profile design with three heights ranging from 1.010 to 1.660
- Rear access covers to help ease harness assembly and repairability
- Amphenol part numbers: 10-640000-XXX

BACKSHELLS ARE OFFERED FOR USE WITH BREAKAWAY FAIL SAFE CONNECTORS IN THREE HEIGHTS

DUMMY CONTACTS

- Available in size 12 and size 8
- Provide a cost effective alternative for sealing unused contact cavities
- Size 8 part number: T3-4008-59P
- Size 12 part number: T3-4012-59P

WIRE COMBS

- Available for the 25-20 insert pattern to help to stabilize and prevent contact side loading
- Amphenol part number: 21-33626-XXX

For information on how to order these accessory products for Breakaway Fail Safe connectors, consult Amphenol Aerospace.

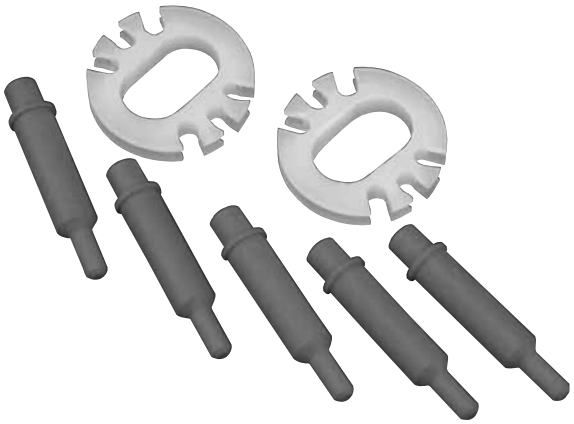

ACCESSORY PRODUCTS FOR BREAKAWAY CONNECTORS: DUMMY CONTACTS AND WIRE COMBS

MIL-DTL-38999, Series II JT

Plug Protection Cap

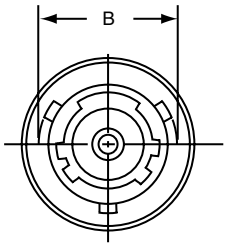

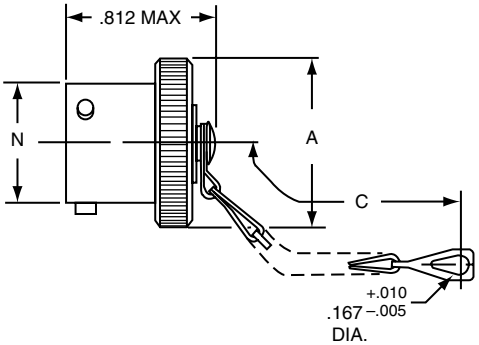

*10-547138-XXX (MS27510XXXC)

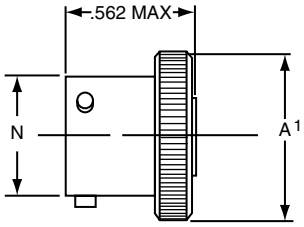

*10-241853-XXX (MS27510XXXA)

For MS stamping identification, accessories must be ordered by MS part number. If ordered by 10- part number, they will be stamped with said number.

* To complete order number, add shell size and suffix number. For example, shell size 10 with cadmium plate, nickel base would be 10-241853-107, MS27510A10C or MS27510A10A.

Shell Size	A Dia. Max.	A[1] Dia. Max.	B +.000 –.016	C Approx.	N Dia. +.001 –.005
8	.719	.703	.563	3.000	.473
10	.844	.828	.680	3.000	.590
12	1.000	.984	.859	3.500	.750
14	1.125	1.109	.984	3.500	.875
16	1.250	1.234	1.108	3.500	1.000
18	1.375	1.359	1.233	3.500	1.125
20	1.500	1.484	1.358	4.000	1.250
22	1.625	1.609	1.483	4.000	1.375
24	1.750	1.734	1.610	4.000	1.500

All dimensions for reference only.

Finish	10-Number Suffix	MS Number Suffix with chain	MS Number Suffix without chain
Chromate Treat	-XX0		
Anodic Coating	-XX5	CXXC	CXXA
Cadmium Plate Nickel Base	-XX7	AXXC	AXXA
Olive Drab, Cadmium, Nickel Base	-XX9	BXXC	BXXA
Electroless Nickel	-XXG	FXXC	FXXA

SERIES II JT PLASTIC PROTECTION CAPS

Shell Size		Plug
8		10-70500-10
	9	10-70506-14
10		10-70506-14
	11	10-70506-16
12		10-70506-16
	13	10-70506-18
14		10-70506-18
	15	10-70506-20
16		10-70506-20
	17	10-70506-22
18		10-70506-22
	19	10-70506-24
20		10-70506-24
	21	10-70576-24
22		10-70576-24
	23	10-70506-28
24		10-70506-28
	25	10-558651-25

MIL-DTL-38999, Series II JT

Receptacle Protection Cap

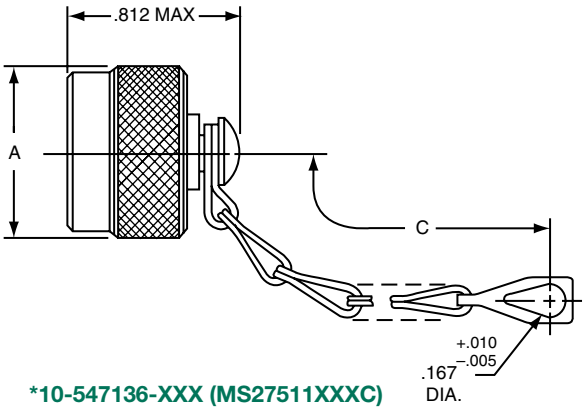

*10-547136-XXX (MS27511XXXC)

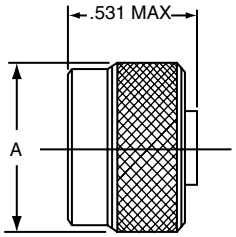

*10-241856-XXX (MS27511XXXA)

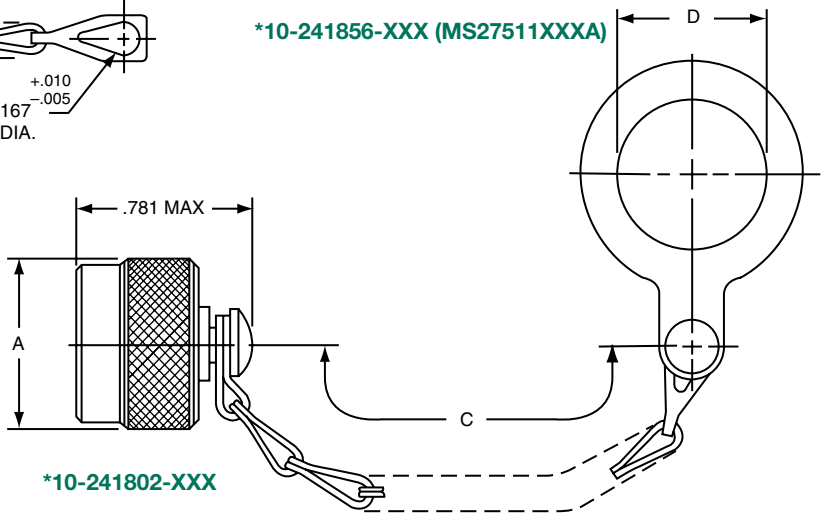

*10-241802-XXX

For MS stamping identification, accessories must be ordered by MS part number.
If ordered by 10- part number, they will be stamped with said number.
* To complete order number, add shell size and suffix number.
For example, shell size 10 with cadmium plate, nickel base would be 10-241802-107, MS27511A10C, MS27511A10A

Shell Size	A Dia. Max.	C Approx.	D +.010 –.000
8	.719	3.000	.891
10	.844	3.000	1.016
12	1.000	3.500†	1.141
14	1.125	3.500	1.266
16	1.250	3.500	1.391
18	1.375	3.500	1.516
20	1.500	4.000	1.641
22	1.625	4.000	1.766
24	1.750	4.000	1.891

† 3.000 for MS27511
All dimensions for reference only.

Finish	10-Number Suffix	MS Number Suffix with chain	MS Number Suffix without chain
Chromate Treat	-XX0		
Anodic Coating	-XX5	CXXC	CXXA
Cadmium Plate Nickel Base	-XX7	AXXC	AXXA
Olive Drab, Cadmium, Nickel Base	-XX9	BXXC	BXXA
Electroless Nickel	-XXG	FXXC	FXXA

SERIES II JT PLASTIC PROTECTION CAPS

Shell Size		Receptacle
8		10-70506-10S
	9	10-70500-10
10		10-70506-12
	11	10-70500-12
12		10-70506-14
	13	10-70500-14
14		10-70506-16
	15	10-70500-16
16		10-70506-18
	17	10-70500-18
18		10-70506-20
	19	10-70500-20
20		10-70506-22
	21	10-70500-22
22		10-70506-24
	23	10-70500-24
24		10-70576-24
	25	10-70506-28

MIL-DTL-38999, Series II JT
MIL-DTL-38999, Series I LJT

Strain Relief (Crimp Type)

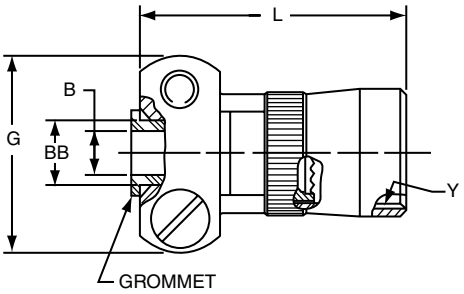

***10-405982-XXX (MS27506XXX-2 REFERENCE M85049/49)**

For MS stamping identification, accessories must be ordered by MS part number.
If ordered by 10-part number, they will be stamped with said number.
*To complete order number, add shell size and suffix number.

Finish	10-Number Suffix	MS27506 Suffix	M85049/49 Suffix
Chromate Treat	-XX0		NA
Anodic Coating	-XX5	CXX-2	(-2-XXA)
Cadmium Plate Nickel Base	-XX7	AXX-2	NA
Olive drab, Cadmium, Nickel base	-XX9	BXX-2	(-2-XXW)
Electroless Nickel	-XXG	FXX-2	(-2-XXN)

For example: Shell size 10 with cadmium plate, nickel base would be 10-405982-107 or M85049/49-2-10W

Shell Size	B Dia. +.010 –.025	G Max.	L Max.	Y Thread (Modified)		BB Dia. +.000 –.011	Screw Size
				Size Class 2B	Modified Minor Dia.		
8	.125	.775	.984	.4375-28UNEF	.399 – .405	.250	6-32UNC
10	.188	.837	.984	.5625-24UNEF	.524 – .529	.312	6-32UNC
12	.312	.963	.984	.6875-24UNEF	.649 – .654	.438	6-32UNC
14	.375	1.087	1.234	.8125-20UNEF	.766 – .771	.562	6-32UNC
16	.500	1.150	1.234	.9375-20UNEF	.891 – .896	.625	6-32UNC
18	.625	1.400	1.234	1.0625-18UNEF	1.002 – 1.007	.750	8-32UNC
20	.625	1.400	1.234	1.1875-18UNEF	1.135 – 1.140	.750	8-32UNC
22	.750	1.587	1.359	1.3125-18UNEF	1.252 – 1.257	.938	8-32UNC
24	.800	1.681	1.281	1.4375-18UNEF	1.377 – 1.382	1.000	8-32UNC

All dimensions for reference only.
Note: For solder type cable clamp 10-241055-XXX (M85049/49) consult Amphenol Aerospace.

MIL-DTL-38999, Series I LJT

Plug Protection Cap

Amphenol Aerospace

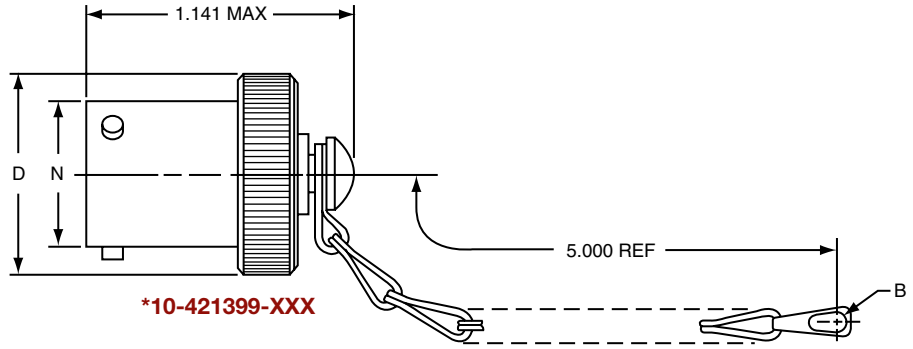

*10-421399-XXX

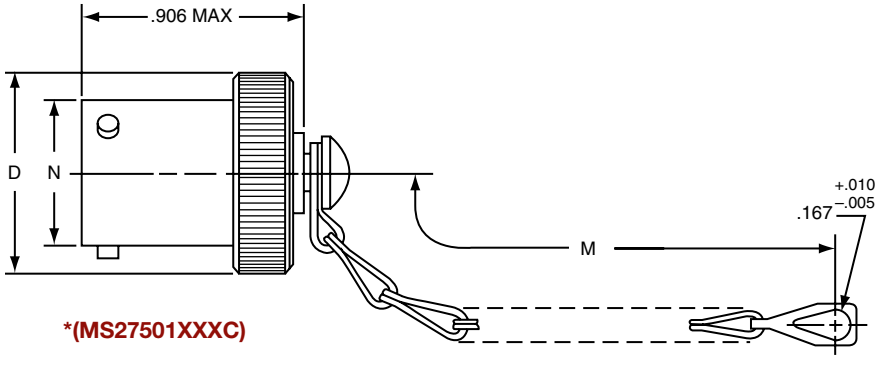

*(MS27501XXXC)

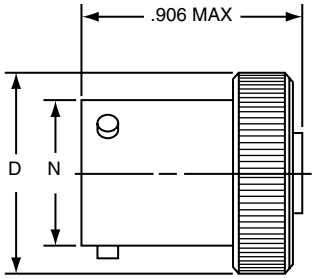

* 10-275196-XXX (MS27501XXXA)

* To complete order number, add shell size and suffix number.
For example, shell size 11 with cadmium plate, nickel base would be 10-421399-117, MS27501A11C, MS27501A11A.

Shell Size	B Dia. Ref	D Dia. Max.	M ±.250	N Dia. +.001 −.005
9	.180	.812	3.000	.572
11	.180	.938	3.000	.700
13	.180	1.062	3.500	.850
15	.180	1.188	3.500	.975
17	.180	1.312	3.500	1.100
19	.209	1.438	3.500	1.207
21	.209	1.562	4.000	1.332
23	.209	1.688	4.000	1.457
25	.209	1.812	4.000	1.582

Finish	10- Number Suffix	MS Number Suffix with chain	MS Number Suffix without chain
Chromate Treat	-XX0		
Anodic Coating	-XX5		
Cadmium Plate Nickel Base	-XX7	AXXC	AXXA
Olive Drab, Cadmium, Nickel Base	-XX9	BXXC	BXXA
Electroless Nickel	-XXG	FXXC	FXXA

All dimensions for reference only.

SERIES I LJT PLASTIC PROTECTION CAPS

Shell Size		Plug
8		10-70500-10
	9	10-70506-14
10		10-70506-14
	11	10-70506-16
12		10-70506-16
	13	10-70506-18
14		10-70506-18
	15	10-70506-20
16		10-70506-20
	17	10-70506-22
18		10-70506-22
	19	10-70506-24
20		10-70506-24
	21	10-70576-24
22		10-70576-24
	23	10-70506-28
24		10-70506-28
	25	10-558651-25

MIL-DTL-38999, Series I LJT

Receptacle Protection Cap

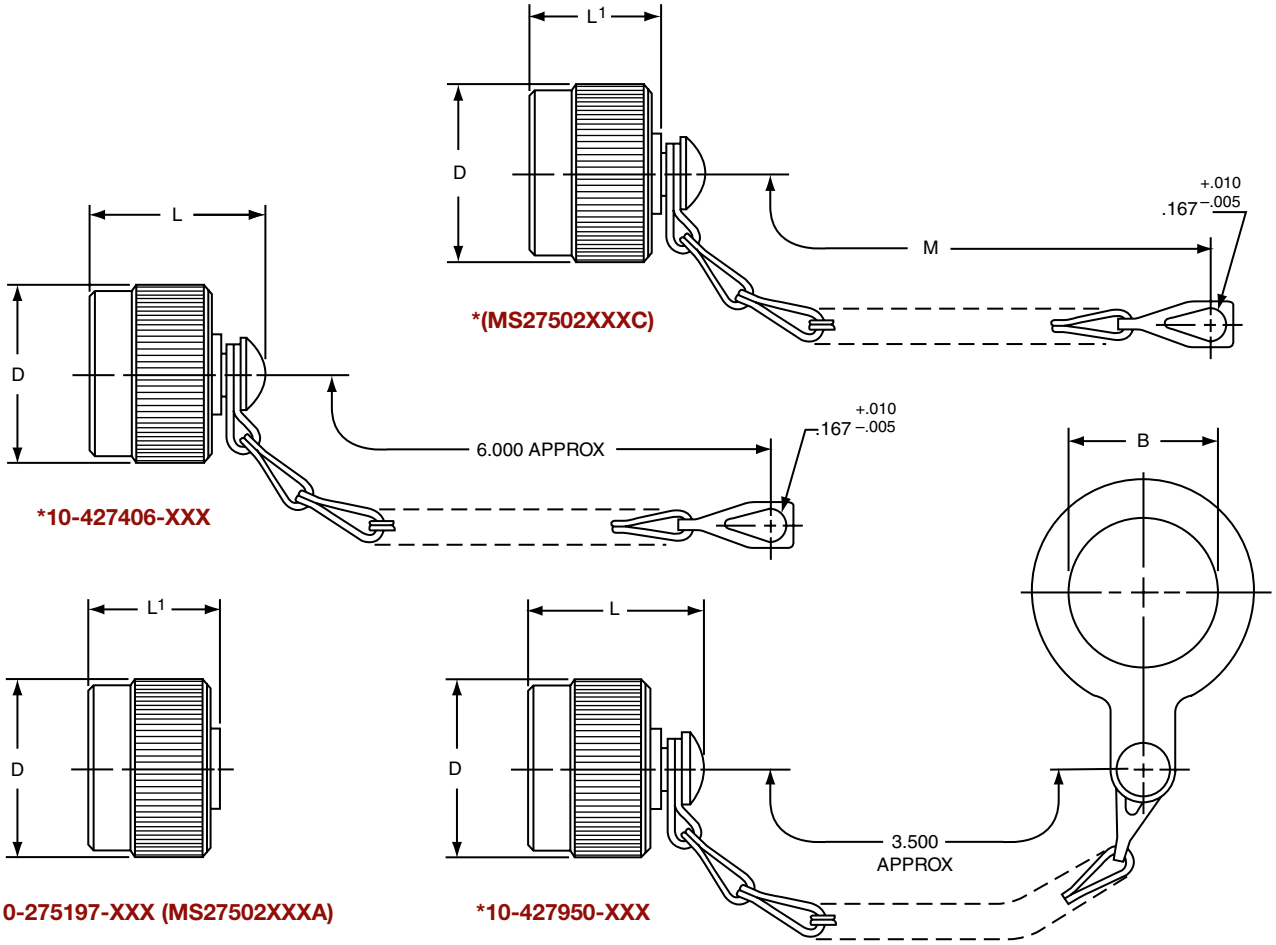

For MS stamping identification, accessories must be ordered by MS part number.
If ordered by 10- part number, they will be stamped with said number.
*To complete order number, add shell size and suffix number.
For example, shell size 11 with cadmium plate, nickel base would be 10-427406-117, MS27502A11C, MS27502A11A.

Shell Size	B Dia. +.010 −.000	D Dia. Max.	L Max.	L¹ Max	M ±.250
9	.703	.844	1.070	.844	3.000
11	.844	.969	1.070	.844	3.000
13	1.016	1.125	1.070	.844	3.500
15	1.141	1.250	1.070	.844	3.500
17	1.266	1.406	1.070	.844	3.500
19	1.391	1.500	1.070	.844	3.500
21	1.516	1.625	1.070	.844	4.000
23	1.641	1.750	1.070	.844	4.000
25	1.766	1.875	1.089	.875	4.000

Finish	10-Number Suffix	MS Number Suffix with chain	MS Number Suffix without chain
Chromate Treat	-XX0		
Anodic Coating	-XX5	CXXC	CXXA
Cadmium Plate Nickel Base	-XX7	AXXC	AXXA
Olive Drab, Cadmium, Nickel Base	-XX9	BXXC	BXXA
Electroless Nickel	-XXG	FXXC	FXXA

All dimensions for reference only.

SERIES I LJT PLASTIC PROTECTION CAPS

Shell Size		Receptacle
8		10-70506-10S
	9	10-70500-10
10		10-70506-12
	11	10-70500-12
12		10-70506-14
	13	10-70500-14
14		10-70506-16
	15	10-70500-16
16		10-70506-18
	17	10-70500-18
18		10-70506-20
	19	10-70500-20
20		10-70506-22
	21	10-70500-22
22		10-70506-24
	23	10-70500-24
24		10-70576-24
	25	10-70506-28

Strain Relief (Solder Type)

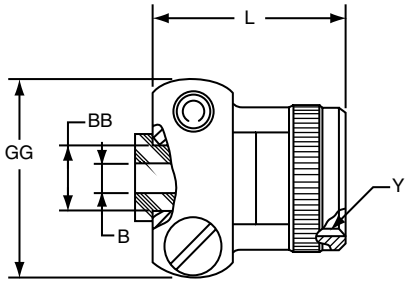

***10-436792-XXX**

For military type cable clamp see MS27506 or M85049/49 on page 174.
*To complete order number, add shell size and suffix number.

Finish	10-Number Suffix
Chromate treat	-XX0
Anodic coating	-XX5
Cadmium Plate Nickel Base	-XX7
Olive Drab, Cadmium, Nickel Base	-XX9
Electroless Nickel	-XXG

For example: Shell size 11 with cadmium plate, nickel base would be 10-436792-117.

Shell Size	B Dia. +.010 –.025	L Max.	Y Thread Class 2B (Plated)	GG Max.	BB Dia. +.000 –.011
9	.125	.859	.4375-28 UNEF	.775	.250
11	.188	.859	.5625-24 UNEF	.837	.312
13	.312	.859	.6875-24 UNEF	.963	.438
15	.375	1.109	.8125-20 UNEF	1.087	.562
17	.500	1.109	.9375-20 UNEF	1.150	.625
19	.625	1.109	1.0625-18 UNEF	1.400	.750
21	.625	1.109	1.1875-18 UNEF	1.400	.750
23	.750	1.234	1.3125-18 UNEF	1.587	.938
25	.800	1.234	1.4375-18 UNEF	1.681	1.000

All dimensions for reference only.

SJT – Accessories

Plug Protection Cap/Receptacle Protection Cap

PLUG PROTECTION CAP

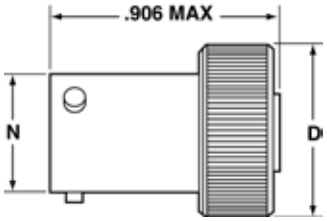

*10-476801-XXX

RECEPTACLE PROTECTION CAP

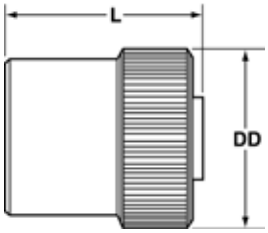

*10-325943-XXX

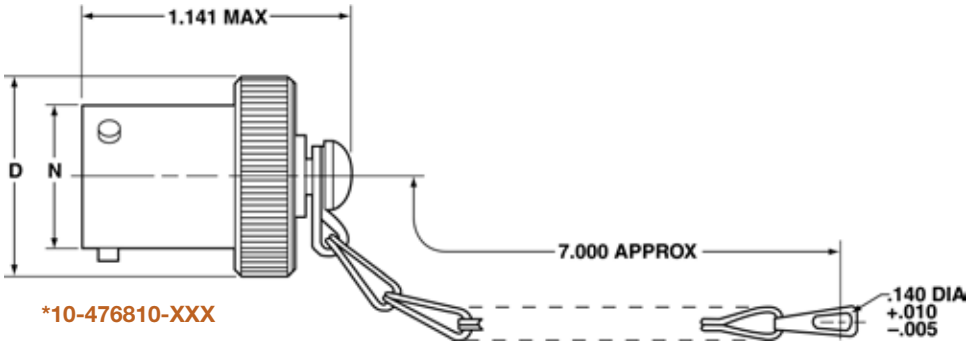

*10-476810-XXX

* To complete order number, add shell size and suffix number. For example, shell size 10 with bright cadmium plated nickel base, 10-476810-107.

Plug Shell Size	D Dia. Max.	N Dia. +.001 –.005
8	.688	.473
10	.812	.590
12	.969	.750
14	1.094	.875
16	1.219	1.000
18	1.344	1.125
20	1.469	1.250
22	1.594	1.375
24	1.719	1.500

All dimensions for reference only

* To complete order number, add shell size and suffix number. For example, shell size 10 with bright cadmium plated nickel base, 10-325943-107.

Receptacle Shell Size	DD Dia. Max.	L Max.
8	.734	.828
10	.844	.828
12	1.016	.828
14	1.141	.828
16	1.265	.828
18	1.391	.828
20	1.500	.828
22	1.625	.828
24	1.750	.859

Protection Cap Finish	Suffix
Bright Cadmium Plated Nickel Base	XX7
Anodic Coating (Alumilite)	XX5
Chromate Treated (Iridite 14-2)	XX0
Olive Drab Cadmium Plate Nickel Base	XX9
Electroless Nickel Coating	XXG

SJT PLASTIC PROTECTION CAPS

Shell Size	Plug	Receptacle
8	10-70500-10	10-70506-10S
10	10-70500-14	10-70506-12
12	10-70500-16	10-70506-14
14	10-70500-18	10-70506-16
16	10-70500-20	10-70506-18
18	10-70500-22	10-70506-20
20	10-70500-24	10-70506-22
22	10-70524-1	10-70506-24
24	10-70506-28	10-70524-1

DUMMY RECEPTACLE

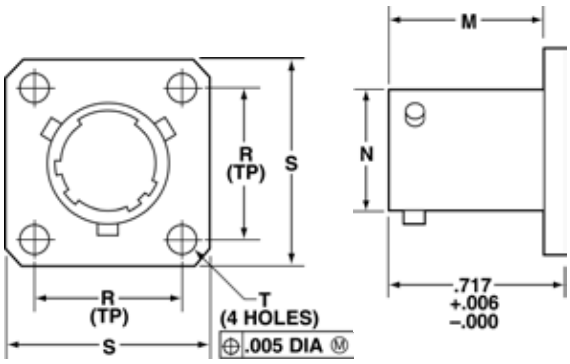

*10-476807-XXX

Dummy Receptacle Finish	Suffix
Bright Cadmium Plated Nickel Base	XX7
Anodic Coating (Alumilite)	XX5
Chromate Treated (Iridite 14-2)	XX0
Olive Drab Cadmium Plate Nickel Base	XX9
Electroless Nickel Coating	XXG

* To complete order number, add shell size and suffix number. For example, shell size 10 with bright cadmium plated nickel base, 10-476807-107.

Dummy Receptacle Shell Size	D Dia. Max.	L Max.
8	.734	.828
10	.844	.828
12	1.016	.828
14	1.141	.828
16	1.265	.828
18	1.391	.828
20	1.500	.828
22	1.625	.828
24	1.750	.859

All dimensions for reference only

CABLE CLAMP

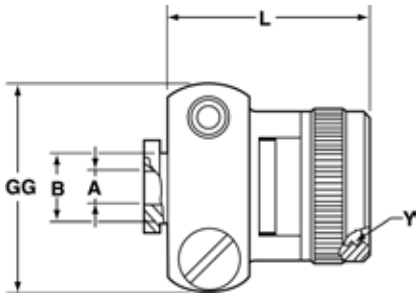

*10-476808-XXX

Cable Clamp Finish	Suffix
Bright Cadmium Plated Nickel Base	XX7
Anodic Coating (Alumilite)	XX5
Chromate Treated (Iridite 14-2)	XX0
Olive Drab Cadmium Plate Nickel Base	XX9
Electroless Nickel Coating	XXG

* To complete order number, add shell size and suffix number. For example, shell size 10 with bright cadmium plated nickel base, 10-476808-107.

Cable Clamp Shell Size	A Dia. +.010 –.025	B Dia. +.000 –.011	L Max.	Y Thread Class 2B UNEF (Plated)	GG Max.
8	.125	.250	.922	.4375-28	.775
10	.188	.312	.922	.5625-24	.837
12	.312	.438	.922	.6875-24	.963
14	.375	.562	1.172	.8125-20	1.087
16	.500	.625	1.172	.9375-20	1.150
18	.625	.750	1.172	1.0625-18	1.400
20	.625	.750	1.172	1.1875-18	1.400
22	.750	.938	1.297	1.3125-18	1.587
24	.800	1.000	1.297	1.4375-18	1.681

All dimensions for reference only

MIL-DTL-38999, Series III TV, II JT, I LJT

Universal "Header Assembly" for Flex Print or PC Board

MOUNTS TO ALL MIL-DTL-38999

The universal header assembly from Amphenol provides for easy separation of the connector from the board.

The header assembly is comprised of a short pin/socket contact. The tail end of the contact is soldered to the through hole of the flex or printed circuit board. The socket is embedded in the insulator, making electrical contact with the printed circuit tail of the connector.

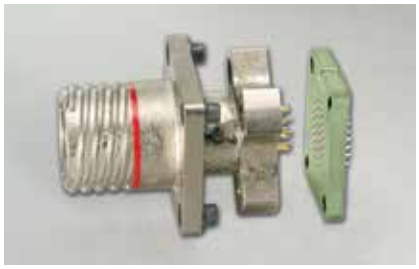

HEADERS PROVIDE EASY SEPARATION OF THE CONNECTOR FROM THE PC BOARD.

FEATURES AND BENEFITS:

- Circular and square header assemblies available
- Cost and time savings in the manufacturing process
- Assemblies can be vapor phase or wave soldered to flex/printed circuit board
- Allows electrical testing when installed properly.
- Connector assemblies can be easily removed from and reattached to the header assembly.

MOUNTING APPLICATIONS

- Amphenol **square** universal headers are slotted to allow mounting to all series of MIL-DTL-38999 or MIL-DTL-26482 connectors without special alterations.
- Amphenol **circular** universal headers are designed to accommodate the rear flange of PCB Board Mount shells, series MIL-DTL-38999 connectors without special alterations.
- The header assembly can be attached to connectors with standard flange placement or directly to the circuit board.
- Connectors with dual flange mounting hardware can be provided to allow easy mounting to the panel or the header assembly.
- Forward flange would mount the connector to the panel
- Rear flange would be used to mount to the header assembly.
- Various types of captivated or loose attaching screws can be utilized for unique applications.

* For information on Header Assemblies for MIL-DTL-26482 connector, consult Amphenol Aerospace.

MOUNTING TO RECTANGULAR ARINC CONNECTORS

- Headers for ARINC connector arrangements accommodate up to 150 pins
- Consult Amphenol Canada, Ontario for ARINC configurations.

MATERIALS

- Body is molded or machined from FR-4.
- Electrical engagement areas of the header contact are plated with .00003 inches minimum of gold over .00005 inches minimum of nickel.

See drawing of standard header on next page.

MIL-DTL-38999, Series III TV, II JT, I LJT

Universal "Header Assembly" for Flex Print or PC Board

Amphenol Aerospace

The drawing below shows the standard header assembly for use with MIL-DTL-38999 connectors.

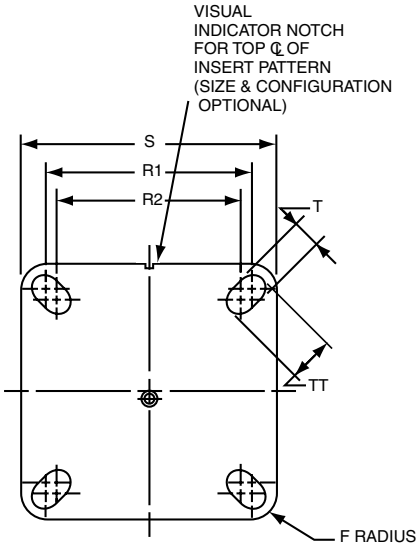

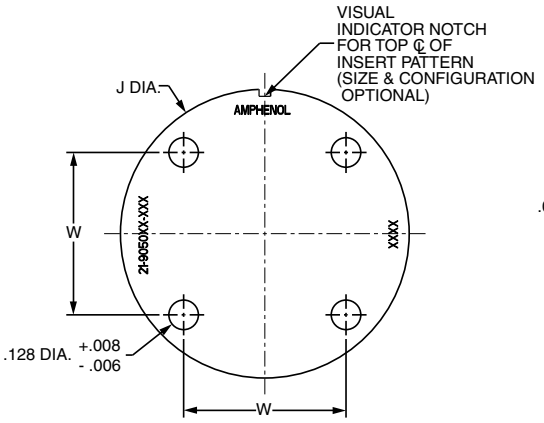

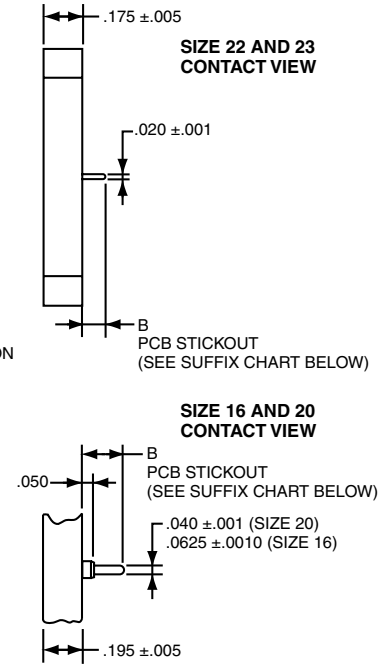

NOTE:
Size 16 accepts .048 to .064 dia. PCB tails.
Size 20 accepts .037 to .043 dia. PCB tails.
Size 22 & 23 accepts .018 to .022 dia. PCB tails

Square Assembly Part Number	Shell Size	F Radius	S ± .005	T + .008 − .006	R1 TP†	R2 TP†	TT + .008 − .006
21-904008-XX( )	8/9	.094	.938	.128	.719	.594	.216
21-904010-XX( )	10/11	.094	1.031	.128	.812	.719	.194
21-904012-XX( )	12/13	.094	1.125	.128	.906	.812	.194
21-904014-XX( )	14/15	.125	1.219	.128	.969	.906	.173
21-904016-XX( )	16/17	.125	1.312	.128	1.062	.969	.194
21-904018-XX( )	18/19	.125	1.438	.128	1.156	1.062	.194
21-904020-XX( )	20/21	.125	1.562	.128	1.250	1.156	.194
21-904022-XX( )	22/23	.125	1.688	.154	1.375	1.250	.242
21-904024-XX( )	24/25	.125	1.812	.154	1.500	1.375	.242

† TP designates true position dimensioning.

Circular Assembly Part Number	Shell Size	J Dia. ± .005	W
21-905008-XX( )	8/9	1.016	.532
21-905010-XX( )	10/11	1.062	.601
21-905012-XX( )	12/13	1.250	.703
21-905014-XX( )	14/15	1.375	.791
21-905016-XX( )	16/17	1.500	.875
21-905018-XX( )	18/19	1.625	.975
21-905020-XX( )	20/21	1.750	1.053
21-905022-XX( )	22/23	1.875	1.145
21-905024-XX( )	24/25	2.000	1.233

HOW TO ORDER INFORMATION FOR HEADER ASSEMBLY WITH MIL-DTL-38999 CONNECTORS

1. Series	2. Type	3. Shell Size & Insert Arrg.	4. PCB Suffix
21-	9040	08-03	1

1. SERIES	
21-	Header Assembly

2. TYPE	
9040	Square
9050	Circular

3. SELECT A SHELL SIZE & INSERT ARRANGEMENT SEE PAGES 2-5

Shell Size & Insert Arrangements are on pages 2-5. First number represents Shell Size, second number is the Insert Arrangement. The dash is required. See MIL-STD-1560 or 1669 document for coordinates of inserts.

* Shell size designation for MIL-DTL-38999 Series I, II, III and IV and MIL-DTL-26482 Series 1 and 2.

4. CONTACT PCB STICKOUT		
Suffix	Shell Size*	Contact PCB Stickout Length B ± .015 Stickout
1	08	.120
1	09	.120
2	10	.185
3	12	.270
NA	14	
NA	15	
2	16	.185
3	16	.270
	18	
2	20	.185
3	20	.270
1	22	.120
2	22	.185
3	22	.270
1	23	.120
	24	
	25	

38999, Series I LJT, II JT, III TV, & SJT

Application Tools

The following data includes information pertaining to the application tools which have been established for crimping, inserting, and removing contacts incorporated in the TV, CTV and MIL-DTL-38999 Series III connectors. For additional information on coax, twinax and triax contact tools, see High Speed Contact section of this catalog.

All crimping tools included are the "full cycling" type and when used as specified in the installation instructions L-624 covering the TV, CTV and MS series connectors, will provide reliable crimped wire to contact terminations. There is a possibility of additional crimping tools other than those included being available at present or in the future for this specific application.

CRIMPING TOOLS

Contact Size/Type	Crimping Tool	Turret Die or Positioner
12 Pin and Socket	M22520/1-01	M22520/1-04
16 Pin and Socket	M22520/1-01 M22520/7-01	M22520/1-04 M22520/7-04
20 Pin and Socket	M22520/1-01 M22520/2-01 M22520/7-01	M22520/1-04 M22520/2-10 M22520/7-08
22, 22D, 22M Pin	M22520/2-01 M22520/7-01	M22520/2-09 M22520/7-07
22, 22D, 22M Socket Series I, III	M22520/2-01 M22520/7-01	M22520/2-07 M22520/7-05
22D Socket Series II	M22520/2-01 M22520/7-01	M22520/2-06 M22520/7-06
8 Twinax Center Pin and Socket	M22520/2-01	M22520/2-37
8 Twinax Intermediate Outer Pin & Socket	M22520/5-01	M22520/5-200

Contact Size/Type	Crimping Tool	Turret Die or Positioner
8 Coaxial Inner Pin and Socket	M22520/2-01	M22520/2-31
8 Coaxial Outer Pin and Socket	M22520/5-01	M22520/5-05 Die Closure B
	M22520/5-01	M22520/5-41 Die Closure B
	M22520/10-01	M22520/10-07 Die Closure B
16 Coaxial Inner Pin and Socket	M22520/2-01	M22520/2-35
16 Coaxial Outer Pin and Socket	M22520/4-01	M22520/4-02
12 Coaxial Inner Pin and Socket	M22520/2-01	M22520/2-34
12 Coaxial Outer Pin and Socket	M22520/31-01	M22520/31-02
10 (Power)	TP-201423	

Where 2 or 3 tools are listed for a contact size, only one tool and its die or positioner are required to crimp the contact. The above crimping tools and positioners are available from the approved tool manufacturer.

INSERTION TOOLS

Use with Contact Size	Plastic Tools		Metal Tools			
			Angle Type		Straight Type Commercial Part No.	
	MS Part Number	Color	MS Part No.	Commercial Part No.		Color
10 (Power	M81969/14-05*	Gray / (White)	M81969/8-11	†	†	Green
12	M81969/14-04*	Yellow / (White)	M81969/8-09	11-8674-12††	11-8794-12††	Yellow
16	M81969/14-03*	Blue / (White)	M81969/8-07	11-8674-16††	11-8794-16††	Blue
20	M81969/14-10*	Red / (Orange)	M81969/8-05	11-8674-20††	11-8794-20††	Red
22	M81969/14-09	Brown/White	M81969/8-03	11-8674-22††	11-8794-22††	Brown
22D, 22M	M81969/14-01*	Green / (White)	M81969/8-01	11-8674-24††	11-8794-24††	Black
8 Coaxial	None Required					
8 Twinax	None		None	None		Red

REMOVAL TOOLS

Use with Contact Size	Plastic Tools		Metal Tools				
				Angle Type		Straight Type Commercial Part No.	
	MS Part Number	Color	For Unwired Contacts Commercial Part No.	MS Part No.	Commercial Part No.		Color
10 (Power)	M81969/14-05*	(Gray) / White	†	M81969/8-12	†	†	Green / White
12	M81969/14-04*	(Yellow) / White	11-10050-11††	M81969/8-10	11-8675-12††	11-8795-12††	Yellow / White
16	M81969/14-03*	(Blue) / White	11-10050-10††	M81969/8-08	11-8675-16††	11-8795-16††	Blue / White
20	M81969/14-10*	(Orange) / Red	11-10050-9††	M81969/8-06	11-8675-20††	11-8795-20††	Red / Orange
22	M81969/14-09*	(Brown)/White	11-10050-8††	M81969/8-04	11-8675-22††	11-8795-22††	Brown/White
22D, 22M	M81969/14-01*	(Green) / White	11-10050-7††	M81969/8-02	11-8675-24††	11-8795-24††	Green / White
8 Coaxial	M81969/14-12	Green	None	None	11-9170††	DRK264-8†††	N/A
8 Twinax	M81969/14-12	Green	None	None	11-9170††	N/A	N/A

For information about contacts see page 30. The M81969/8, 11-8674, 11-8675, and 11-8794 metal contact insertion and removal tools will accommodate wires having the maximum outside diameter as follows: Contact size 12: dia. is .155, size 16: dia. is .109, size 20: dia. is .077, size 22D: dia. is .050. When wire diameters exceed those specified, the plastic tools must be used.

* Double end insertion/removal tool.

** Twinax insertion tools are available only in a straight type, metal version.

† To be determined.

†† Contact Daniels Manufacturing Co. or Astro Tool Corp. for availability.

††† Daniels Manufacturing Co. part number

WIRE STRIPPING

1. Strip wire to required length. (See Figure at right). When using hot wire stripping, do not wipe melted insulation material on wire strands; with mechanical strippers do not cut or nick strands.
2. See Table 1 for proper finished outside wire dimensions.
3. Twist strands together to form a firm bundle.
4. Insert stripped wire into contact applying slight pressure until wire insulation butts against wire well. Check inspection hole to see that wire strands are visible. If there are strayed wire strands, entire wire end should be re-twisted.

When wire is stripped and properly installed into contact, the next step is to crimp the wire inside the contact by using the proper crimping tool.

STRIPPING DIMENSIONS

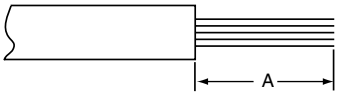

Wire Size	A
22. 22M, 22D	.125 (3.18)
20	.188 (4.77)
16	.188 (4.77)
12	.188 (4.77)

Table 1

Contact Size	Wire Dimension (inches)**	
	Min.	Max.
10	.135	.162
12	.097	.142
16	.065	.109
20	.040	.077
22	.034	.060
22M, 22D	.030	.050

** Min. diameters to insure moisture proof assembly; max. diameters to permit use of metal removal tools.

CRIMPING

See table on preceding page for recommended M22520 series crimping tools, turret head or positioner selection settings according to contact size, part number and wire gauge size.

1. Insert stripped wire into contact crimp pot. Wire must be visible through inspection hole.
2. Using correct crimp tool and locator, cycle the tool once to be sure the indentors are open, insert contact and wire into locator. Squeeze tool handles firmly and completely to insure a proper crimp. The tool will not release unless the crimp indentors in the tool head have been fully actuated.
3. Release crimped contact and wire from tool. Be certain the wire is visible through inspection hole in contact.

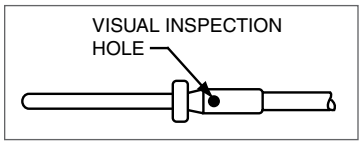

Examples of M22520 Series Crimping Tools:
Shown top: tool used for small size 22, 22D and 22M contacts.
Shown bottom: tool used for size 20, 16 or 12 contacts and has a positioner that can be dialed for each contact size.

CONTACT INSERTION

1. First remove hardware from the plug and receptacle and slide the hardware over wires in proper sequence.

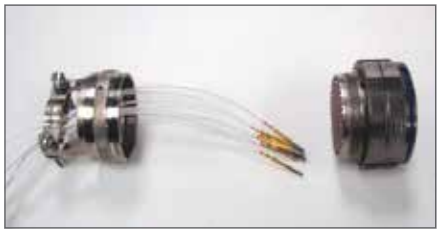

Note: All plastic tools are double-end-ed. The colored side is the insertion tool and the white side is the removal tool.

2. Use proper plastic or metal insertion tool for corresponding contact. (Consult Insertion Tool table on preceding page). Slide correct tool (with plastic tool use colored end) over wire insulation and slide forward until tool bottoms against rear contact shoulder.

Plastic tool with contact in proper position.

Metal tool with contact.

3. Next align the tool and contact up to the properly identified cavity at rear of connector plug. Use firm, even pressure; do not use excessive pressure. It is recommended to start at the center cavity. Contact must be aligned with grommet hole and not inserted at an angle. Push forward until contact is felt to snap into position within insert.

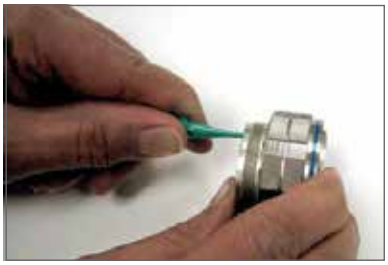

Continued on next page.

Installation Instructions, cont.

CONTACT INSERTION, CONT.

4. Remove tool and pull back lightly on wire, making sure contact stays properly seated and isn't dragged back with the tool. Repeat operation with remainder of contacts to be inserted, beginning with the center cavity and working outward in alternating rows.

5. After all contacts are inserted, fill any empty cavities with wire sealing plugs. (Refer to sealing plug charts for Series III on page 29, for Series I & II and SJT see page 30-31.

6. Reassemble plug or receptacle hardware - slide forward and tighten using connector pliers. Connector holding tools are recommended while tightening back accessories. When using strain relief, center wires at bar clamp. Slide clamp grommet into position and tighten clamp bar screws. When tightening screws, pressure should be applied in the same direction that clamp is threaded to rear threads of connector. When not using clamp grommet, build up wire bundle with vinyl tape so clamp bar will maintain pressure on wires.

CAUTION, when inserting or removing contacts, do not spread or rotate tool tips.

CONTACT REMOVAL

1. Remove hardware from plug or receptacle and slide hardware back along wire bundle.

2. Use proper plastic or metal removal tool for corresponding contact. (Consult Removal Tool table on page 167). Slide correct size tool over wire insulation.

Use white end of plastic tool for removal of contacts.

3. Insert plastic or metal removal tool into contact cavity until tool tips enter rear grommet and come to a positive stop. Hold tool tip firmly against positive stop on contact shoulder. Grip wire and simultaneously remove tool and contact. (On occasion, it may be necessary to remove tool, rotate 90° and reinsert.)

Removal of contacts with metal tool.