增 益 实 业

零 件 承 认 书

SPECIFICATION FOR APPROVAL

客户名称： 0110

规格描述： ZEHP1206S一体成型电感规格书

日　　期： 2023/10/10

增益签核：

制订	审核	核准
夏琳	陈雨	李万

客户签核：

工程	审核	核准

东莞市增益实业有限公司
地址：东莞市塘厦镇林村塘厦大道北552号
电话：0769-87321000
传真：0769-87891229

物料类型：	一体成型电感
日　　期：	2023/10/10
版　　本：	A

◆特征：	Features:
● 低直流电阻和超大电流的薄型设计	● Low RDC and ultra-high current thin design
● 磁屏蔽型抗电磁干扰强适用于高密度安装	● Magnetic shielding type, strong anti- electromagnetic Interference, suitable for high- density installation
● 高可靠性，通过采用一体成型结构享有卓越的抗震动性	● High-reliability, High vibration resistance as result of newly developed integral construction
● 由于复合结构，超低蜂鸣噪声	● Ultra Low buzz noise, due to composite construction
● 低损耗合金粉末压铸低阻抗，小寄生电容	● Die-casting by low loss alloy powder low impedance, Small parasitic capacitance
● 能效高，可减少绕线的低直流电阻与磁芯的涡流损耗	● High efficiency Low DC resistance of winding and low eddy-current loss of the core
● 频率高达 3MHz	● Frequency up to 3MHz
● 绝缘最大电压 30VDC	● Absolute maximum voltage 30VDC
● 符合 RoHS,无卤和 REACH	● RoHS, Halogen Free and REACH Compliance
◆用途：	**Applications:**
● PDA,笔记本,台式机,服务器应用程序	● PDA , notebook ,desktop ,server applications
● 大电流 POL 转换器	● High current POL converters
● 电池供电设备	● Battery powered devices
● 分布式电源系统中的 DC/DC 转换器	● DC/DC converters in distributed power systems
◆环境：	**Environmental Data:**
● 工作温度：-55℃ 至+125℃（包括线圈自身温升）	● Operating Temperature: -55℃ to +125℃(Including coils self-temperature rise)
◆试验设备：	**Test Equipment：**
● 电感值: WK3260B 或同等仪器	● L: WK3260B LCR meter or equivalent
● 电流: WK3260B+WK3265B	● Isat & Irms: WK3260B+WK3265B
● 直流电阻: Chroma 16502 或同等仪器	● DCR:Chroma 16502 or equivalent
◆产品型号：	**Product Identification：**

ZEHP	1206S	-	100	MT
①	②		③	④

① 产品代号 Product symbol HP:合金平面
② 尺寸规格(L×W×H) (mm)Dimension(L×W×H) (mm):1206S 13.5x12.6x6.0
③ 电感量标称值 Inductance :10uH
④ 电感量公差 Tolerance :M ±20% T:编带

产品外观尺寸：

Shape and Dimensions(dimensions are in mm)：

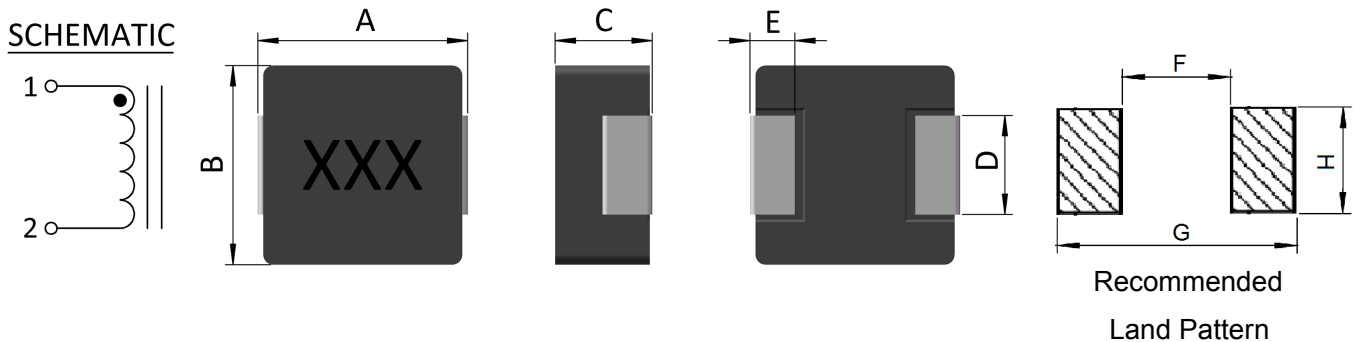

Part No	ITEM							
	A	B	C	D	E	F 参考	G 参考	H 参考
ZEHP1206S	13.5 ±0.35	12.6±0.40	6.0±0.30	3.85±0.5	2.7±0.3	6.50	14.5	5.10

◆规格特性：　　Specifications：

ZEHP1206S Series

Part Number	Inductance (uH) @100KHz	DC Resistance (mΩ) Max.	Heat Rating Current (A)	Saturation Current (A)
ZEHP1206S-R47MT	0.47	1.20	36.0	60.0
ZEHP1206S-1R0MT	1.0	2.10	25.0	36.0
ZEHP1206S-1R5MT	1.5	2.90	24.0	31.0
ZEHP1206S-2R2MT	2.2	4.50	21.5	28.5
ZEHP1206S-3R3MT	3.3	6.50	17.5	26.0
ZEHP1206S-4R7MT	4.7	8.5	16.5	25.0
ZEHP1206S-5R6MT	5.6	11.0	14.5	23.0
ZEHP1206S-6R8MT	6.8	14.0	13.5	20.0
ZEHP1206S-8R2MT	8.2	16.0	12.5	16.5
ZEHP1206S-100MT	10	17.0	11.5	15.5
ZEHP1206S-150MT	15	30.0	10.0	11.5
ZEHP1206S-220MT	22	44.0	8.5	9.5
ZEHP1206S-270MT	27	55.0	7.5	8.0
ZEHP1206S-330MT	33	65.0	7.0	8.5
ZEHP1206S-470MT	47	85.0	6.0	7.3
ZEHP1206S-680MT	68	130	5.5	5.7
ZEHP1206S-101MT	100	150	4.0	4.5

Ls 测试频率/电压 Ls Test frequency/Voltage：100kHz/1.0V；
饱和电流：指使电感量比初始值下降 30%的电流值.
Isat：The DC current is that which cause a 30% inductance reduction from the initial value.
温升电流: 指使电感器表面温度上升 40℃的电流值（参考周围环境温度 25℃）。
IDC: The DC current is inductor surface temperature to rise by 40℃ (Reference ambient temperature 25℃).

1 . 可靠性 Reliability Data

项目 Items	要求 Requirements	试验方法及备注 Test Methods and Remarks
工作温度范围 Operating Temperature Range	-55℃～+125℃	包括自身发热的上升温度 Including self-heating temperature rise.
可焊性 Solderability	电极面 90%以上覆盖新的焊料。 90% or more of electrode area shall be coated by new solder.	在 245 ℃±5 ℃ 熔融的焊锡（96.5Sn/3.0Ag/0.5Cu）中浸 5 s±1 s。 Dip pads in flux and dip in solder pot (96.5Sn/3.0Ag/0.5Cu) at 245 ℃±5 ℃ for (5±1) seconds.
耐焊接热 Resistance to Soldering Heat	外观无可见机械损伤； 电感量变化率：±10%以内。 No visible mechanical damage. Inductance change: Within ±10%	在 260 ℃±5 ℃ 熔融的焊锡（96.5Sn/3.0Ag/0.5Cu）中浸 10 s±1 s。 Dip pads in flux and dip in solder pot (96.5Sn/3.0Ag/0.5Cu) at 260℃±5 ℃ for (10±1) seconds.
低温 Low temperature stroe	外观无可见机械损伤； 电感量变化率：±10%以内。 No visible mechanical damage. Inductance change: Within ±10%	温度-55 ℃±2℃，时间 1000 h Stroe temperature -55±2℃ for total 1000hr.

高温 High temperature stroe	外观无可见机械损伤；电感量变化率：±10%以内。 No visible mechanical damage. Inductance change: Within ±10%	温度 125 ℃±2℃，时间 1000 h Stroe temperature 125±2℃ for total 1000hr.
恒定湿热 Static Humidity	外观无可见机械损伤；电感量变化率：±10%以内。 No visible mechanical damage. Inductance change: Within ±10%	将电感器放置在于湿度(93±3)%RH,温度 40 ℃±2 ℃的环境中存放 96 h±2 h，在室温下放置 2 小时后、48 小时内测试。 Inductors shall be subjected to (93±3)%RH . at 40 ℃±2 ℃ for 96 h±2 h .Inductors are to be tested after having air dried for 2 hours.
温度变化 Thermal shock	外观无可见机械损伤；电感量变化率：±10%以内。 No visible mechanical damage. Inductance change: Within ±10%	(-40±3） ℃,时间(30±3) min ↔ (85℃±2) ℃/(30±3) min，转换时间 (2~3) min,循环5次； 在室温下放置 2 小时后、48 小时内测试。 The test sample shall be placed at (-40±3)℃ and (85±2)℃ for (30±3) min, different temperature conversion time is 2~3 minutes. The temperature cycle shall be repeated 5 cycles.
机械冲击 Mechanical Shock	 电感无出现电极脱落、断线现象。 No evidence of terminal peel off and wire broken.	把电感焊在厚度为1.0mm的基板上,并固定在黄铜制15cm大,重1.4Kg的立方体内,然后从0.5m高度往地板自然下落(X,Y,Z方向各一回) Inductors shall be Soldering on the PCB with 1.0mm thick and fixed them in a 15cm big.,1.4Kg weight cube with brass base, let it nature fallen form 0.5m height (X,Y,Z three axes)
端子强度 Adhesion of terminal electrode	元件的端子与本体结合无松动、无脱落。 Strong bond between the pad and the core, without come off PC board.	将电感器用 260 ℃±5 ℃，20 s±5 s 焊在带有 0.3 mm 厚锡膏的基板上，然后用治具垂直电极面方向加压 10 N，10 s ±1 s。 Inductors shall be subjected to 260 ℃ ±5 ℃ for 20 s±5 s Soldering in the base whit 0.3mm solder. And then aplomb electrode way plus tax 10 N for 10± 1s seconds.

2.产品包装：　　**Packaging：**

● Tape and Reel Specifications: (Dimensions are in mm)

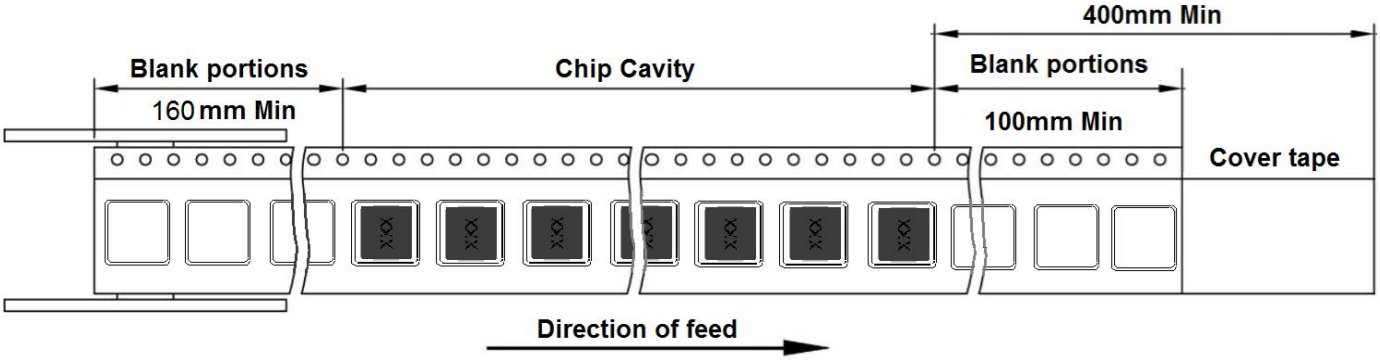

● Reel dimensions (mm)

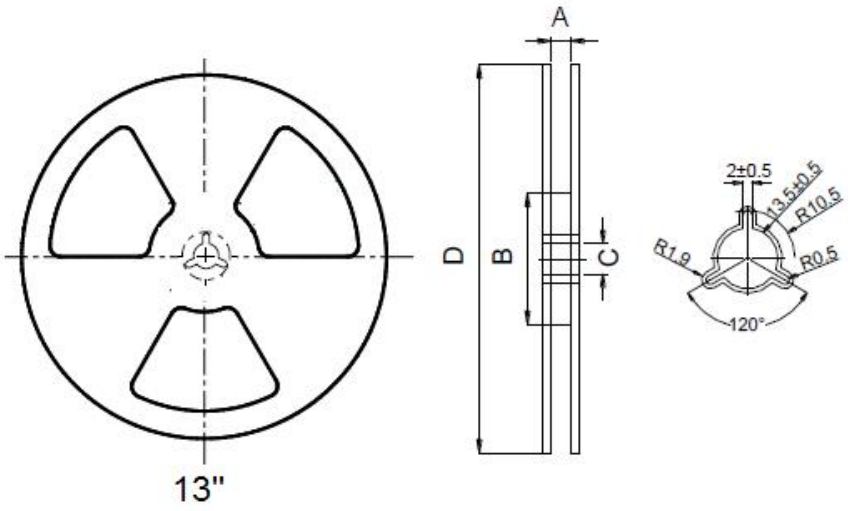

●Tape Dimension (mm)

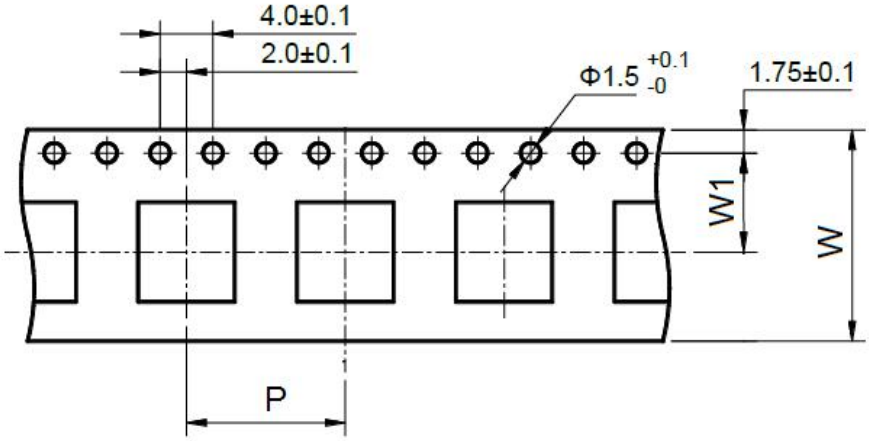

3.推荐使用的焊接曲线 Recommended soldering profile

本产品建议使用回流焊接法。
Applicable soldering process to the products is reflow soldering.

3.1 焊接材料 Soldering Materials

①焊料：Sn-3.0Ag-0.5Cu

Solder: Sn-3.0Ag-0.5Cu
②助焊剂：使用松香基助焊剂，禁止使用卤化物含量超过 0.2wt%的强酸性助焊剂和水溶性助焊剂。
Flux: Use rosin-based flux, but not strongly acidic flux (with chlorine exceeding 0.2 wt%). Do not use water-soluble flux.

3.2 焊接曲线 Soldering Profile

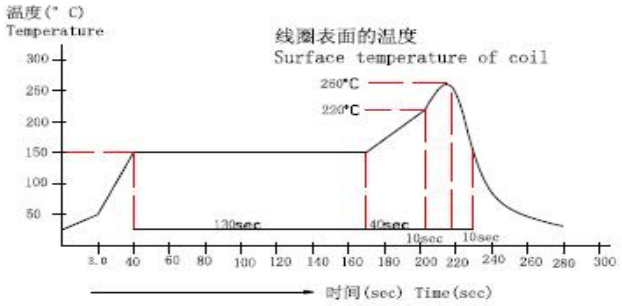

4 . 验收规则 Inspection Rules

1 产品的验收按 GB/T2828.1-2003 规定进行,其检查水平: 外观、尺寸， Ⅱ, AQL=0.4; L0A, L30DC, S-4,AQL=0.15。

The inspection must be performed per GB/T2828.1-2003,with its examination level: Appearance and dimensions,Ⅱ,AQL=0.4;L0A and L30DC, S-4，AQL: 0.15;

2 客户在收到磁芯产品后一个月内须验收完毕,并将验收结果书面通知供货方,否则视为已验收合格。
Inspection will be completed and inspection result will be feedback to WTRL in written within one month after cores are received fromWTRL or it will be considered approved by customer.

5.贮存方法 Storage Methods

5.1 存储期限 Storage Period

为保证端子电极的焊接特性和包装材料处于良好状态，请于本公司发货后 6 个月内使用本产品。同时，由于端子电极的焊接特性会随时间发生变化，如果贮存时间超过 6 个月，请首先确认其焊接特性后再安装使用。

To maintain the solderability of terminal electrodes and to keep the packing material in good condition, product should be used within 6 months from the time of delivery. And the solderability of products electrodes may decrease as time passes, so in case

of storage over 6 months, slderability shall be checked before actual usage.

5.2 存储条件 Storage Conditions

①存放货物的仓库应满足以下条件：
温度: -10 ~ +40℃ 相对湿度: 30~70%RH

Store products in a warehouse in compliance with the following condition:
Temperature: -10 to +40℃ Humidity: 30~70%RH

②不要使产品遭受温度和湿度的快速变化。

Do not subject products to rapid changes in temperature and humidity.

③不要将产品存放在化学环境中，如硫酸气体或碱性气体中，否则会降低电极端子的焊接特性和使电感器腐蚀。

Do not store the products in chemical atmosphere such as one containing sulfurous acid gas or alkaline gas, that will causes poor solderability and corrosion of inductors.

④不要以散包装的形式存放产品以防止电感器间的相互碰撞造成磁芯破裂或断线。

Do not store products in bulk packaging to prevent collision among inductors which causes core chipping and wire breakage.

⑤为了避免受潮气、灰尘等物质的影响，产品应保管于货架上。

Store products on pallets to protect from humidity, dust, etc.

⑥产品应避免热冲击、振动以及直接光照等等。

Avoid heat shock, vibration, direct sunlight, etc.

6.说明 NOTE

6.1 本承认书的数据更改需经双方确认，任何一方单独修改无效。

Any revision to the specification Approval must be confirmed by both the supplier and the customer, otherwise the revision is invalid.

6.2 当本公司的产品使用在一般电子设备以外的领域时，对于此所引发的设备失效我司将不承担任何法律责任。

In case of using the product for the purpose other than general electronics devices, we shall not be held liable for any dysfunctions in or damage to the equipment with which the product is used.

6.3 本承认书只保证我司产品作为一个单体时的质量情况，当我司产品被安装到贵司产品上时，请贵司对使用在贵司电路上的产品情况进行了有效评价和确认。

Our specification limits the quality of the component as a single unit. Please ensure the component is thoroughly evaluated in your application circuit.

6.4 本承认书在客户收到 7 天之内，必须签章返回，逾期视为默认。

The specification Approval should be sent back to the supplier with customer’s chop on it within 7 days after receiving it, or we will take it as approved by customer.