DUAL-IN-LINE SOCKETS

SERIES 121, 122, 123, 124 • 1 - 4 LEVEL WRAPOST • OPEN FRAME

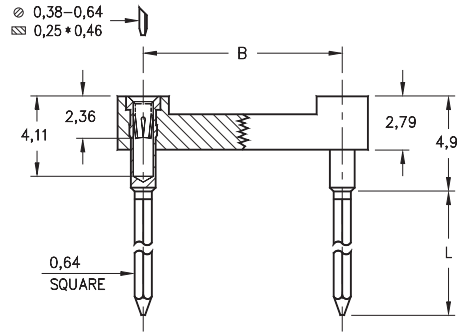

See page 130 for Insulator Details

- Solderless wrapost terminals are firmly locked in the insulator body to withstand torque of a wrapping tool
- Hi-Rel, 4-finger BeCu #30 contact is rated at 3 amps. See page 253 for details
- Series 121, 122, 123 and 124 use MM #0040, #0086, #0088 and #0089 pins. See page 198 for details
- Insulators are high temperature thermoplastic, suitable for all soldering operations
- For Electrical, Mechanical and Environmental Data, see page 264 for details

ORDERING INFORMATION

Total number of pins	A	B	C	Quantity per tube	L = 6,6 (1 Level Wrapost)	L = 9,4 (2 Level Wrapost)	L = 12,95 (3 Level Wrapost)	L = 16,0 (4 Level Wrapost)
10	12,6	5,08	7,6	40	121-XX-210-41-001000	122-XX-210-41-001000	123-XX-210-41-001000	124-XX-210-41-002000 43 or 93 Plating Code ONLY
4	5,0	7,62	10,1	102	121-XX-304-41-001000	122-XX-304-41-001000	123-XX-304-41-001000	124-XX-304-41-002000
6	7,6	7,62	10,1	67	121-XX-306-41-001000	122-XX-306-41-001000	123-XX-306-41-001000	124-XX-306-41-002000
8	10,1	7,62	10,1	50	121-XX-308-41-001000	122-XX-308-41-001000	123-XX-308-41-001000	124-XX-308-41-002000
10	12,6	7,62	10,1	40	121-XX-310-41-001000	122-XX-310-41-001000	123-XX-310-41-001000	124-XX-310-41-002000
14	17,7	7,62	10,1	28	121-XX-314-41-001000	122-XX-314-41-001000	123-XX-314-41-001000	124-XX-314-41-002000
16	20,3	7,62	10,1	25	121-XX-316-41-001000	122-XX-316-41-001000	123-XX-316-41-001000	124-XX-316-41-002000
18	22,8	7,62	10,1	22	121-XX-318-41-001000	122-XX-318-41-001000	123-XX-318-41-001000	124-XX-318-41-002000
20	25,3	7,62	10,1	20	121-XX-320-41-001000	122-XX-320-41-001000	123-XX-320-41-001000	124-XX-320-41-002000
22	27,8	7,62	10,1	18	121-XX-322-41-001000	122-XX-322-41-001000	123-XX-322-41-001000	124-XX-322-41-002000
24	30,4	7,62	10,1	16	121-XX-324-41-001000	122-XX-324-41-001000	123-XX-324-41-001000	124-XX-324-41-002000
28	35,5	7,62	10,1	14	121-XX-328-41-001000	122-XX-328-41-001000	123-XX-328-41-001000	124-XX-328-41-002000 43 or 93 Plating Code ONLY
20	25,4	10,16	12,7	20	121-XX-420-41-001000	122-XX-420-41-001000	123-XX-420-41-001000	124-XX-420-41-002000
22	27,8	10,16	12,7	18	121-XX-422-41-001000	122-XX-422-41-001000	123-XX-422-41-001000	124-XX-422-41-002000
24	30,4	10,16	12,7	16	121-XX-424-41-001000	122-XX-424-41-001000	123-XX-424-41-001000	124-XX-424-41-002000
28	35,5	10,16	12,7	14	121-XX-428-41-001000	122-XX-428-41-001000	123-XX-428-41-001000	124-XX-428-41-002000
32	40,6	10,16	12,7	12	121-XX-432-41-001000	122-XX-432-41-001000	123-XX-432-41-001000	124-XX-432-41-002000 43 or 93 Plating Code ONLY
24	30,4	15,24	17,7	16	121-XX-624-41-001000	122-XX-624-41-001000	123-XX-624-41-001000	124-XX-624-41-002000
28	35,5	15,24	17,7	14	121-XX-628-41-001000	122-XX-628-41-001000	123-XX-628-41-001000	124-XX-628-41-002000
32	40,6	15,24	17,7	12	121-XX-632-41-001000	122-XX-632-41-001000	123-XX-632-41-001000	124-XX-632-41-002000
36	45,7	15,24	17,7	11	121-XX-636-41-001000	122-XX-636-41-001000	123-XX-636-41-001000	124-XX-636-41-002000
40	50,8	15,24	17,7	10	121-XX-640-41-001000	122-XX-640-41-001000	123-XX-640-41-001000	124-XX-640-41-002000
42	53,3	15,24	17,7	9	121-XX-642-41-001000	122-XX-642-41-001000	123-XX-642-41-001000	124-XX-642-41-002000
48	60,9	15,24	17,7	8	121-XX-648-41-001000	122-XX-648-41-001000	123-XX-648-41-001000	124-XX-648-41-002000
50	63,5	15,24	17,7	8	121-XX-650-41-001000	122-XX-650-41-001000	123-XX-650-41-001000	124-XX-650-41-002000
52	66,0	15,24	17,7	7	121-XX-652-41-001000	122-XX-652-41-001000	123-XX-652-41-001000	124-XX-652-41-002000 43 or 93 Plating Code ONLY
50	63,5	22,86	25,3	8	121-XX-950-41-001000	122-XX-950-41-001000	123-XX-950-41-001000	124-XX-950-41-002000
52	66,0	22,86	25,3	7	121-XX-952-41-001000	122-XX-952-41-001000	123-XX-952-41-001000	124-XX-952-41-002000
64	81,2	22,86	25,3	6	121-XX-964-41-001000	122-XX-964-41-001000	123-XX-964-41-001000	124-XX-964-41-002000

SPECIFY PLATING CODE XX =	13 ◆	91	93	41 ◆	43 ◆	XX=Plating Code See to Left
Sleeve (Pin)	0,25µm Au	5,08µm Sn/Pb	5,08µm Sn/Pb	5,08µm Sn	5,08µm Sn	
Contact (Clip)	0,76µm Au	0,25µm Au	0,76µm Au	0,25µm Au	0,76µm Au	