C&K Switches Catalog

Pushbutton

Tactile

Navigation

Keyswitch

Detect

Toggle

Rocker

Dip

Slides

Snap

Rotary

Rotary (Encoder)

Switchlock

Thumbwheel

Smartcard Connector

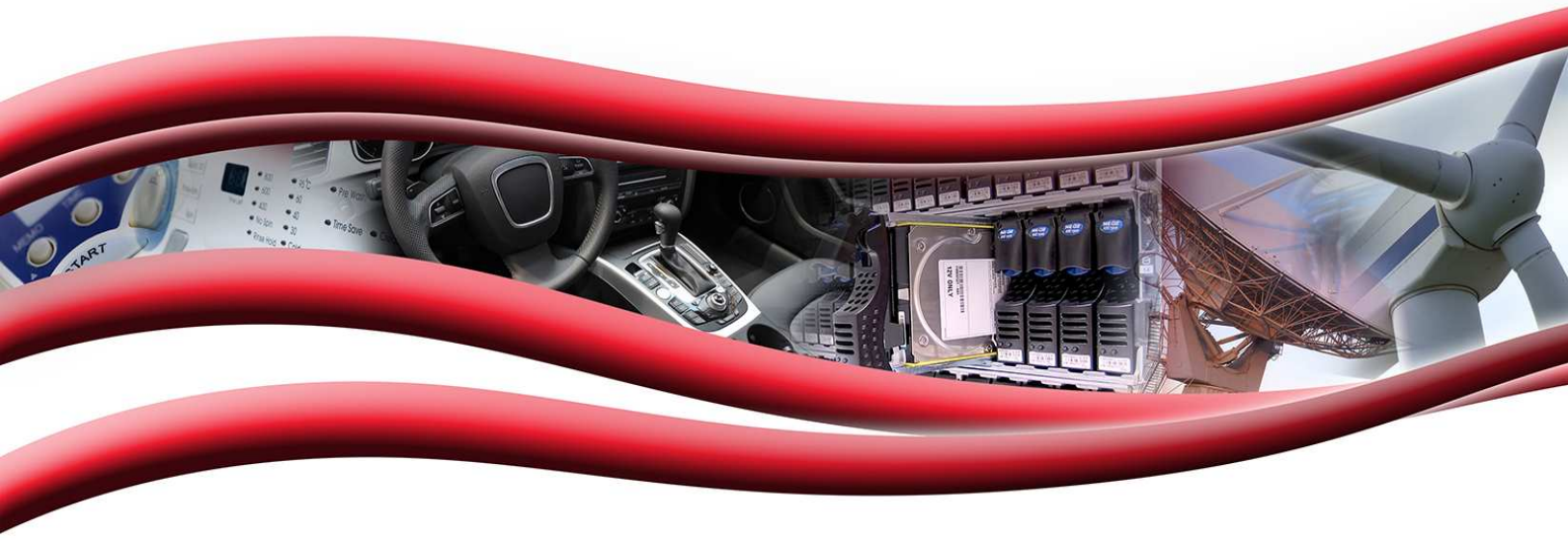

Pushbutton
Product Selection Guide

Pushbutton									
Series	**ELUM**	**EP**	**TP**	**E020**	**8020**	**E010**	**8060**	**8500**	**KM**
Switch Type	Mom./ Latching	Tiny	Tiny	Snap-acting Mom.	Snap-acting Mom.	Miniature	Alternate Action	Sub-miniature	Sub-miniature
Poles/Throws	SPDT	SPST, SPDT, DPST	SPST, SPDT, DPST	SPDT, DPDT	SPDT, DPDT, 3PDT, 4PDT	SPDT	SPDT, DPDT	SPST	SPST, SPDT
Max. Current	3.5 VA	1 Amp	1 Amp	1 Amp	1 Amp	4 Amps	6 Amps	3 Amps	1 Amp
Process Sealed		•		•		•			
Illuminated	•				•		•	•	
PCB Mount Options									
Thru-hole	•	•	•	•	•	•	•	•	•
Vertical		•	•	•	•	•	•	•	•
Right Angle	•	•	•	•	•	•	•	•	•
Surface Mount	•	•							
Panel Mount			•		•	•	•	•	•
Page No.	A-4	A-9	A-15	A-21	A-29	A-46	A-52	A-62	A-67

Pushbutton							
Series	**8600**	**8700**	**GP**	**PN**	**PHB**	**F**	**NE-18**
Switch Type	Micro-miniature	Over Travel	Ultra-miniature	Alternate & Mom. Action	Short Stroke	Alternate & Mom. Action	Mains / Power
Poles/Throws	SPST	SPST	SPST, SPDT	SPDT, DPDT, 4PDT	DPDT, 4PDT	DPDT, 4PDT, 6PDT, 8PDT, 10PDT	DPST, DPDT Varied
Max. Current	500 mA	1 Amp	0.4 VA	200 mA	100 mA	500 mA	6 A
Process Sealed			•				
PCB Mount Options							
Thru-hole	•	•	•	•	•	•	•
Vertical	•	•	•				
Right Angle			•	•	•	•	•
Surface Mount			•				
Panel Mount	•	•				•	•
Page No.	A-71	A-74	A-77	A-81	A-84	A-87	A-96

Pushbutton
Product Selection Guide

Pushbutton								
Series	**FP**	**AP**	**APB**	**HP**	**NP**	**PBA**	**PB**	**PS**
Switch Type	Ultra Miniature	Industrial	Industrial	Hall Effect	Sealed Power	Snap-acting Mom.	Miniature	Sub-miniature Microminiature
Poles/Throws	SPST	SPST	SPST	Linear Output	SPDT	DPST	DPDT 4PDT	SPDT DPDT
Max. Current	0.4 VA	400mA	400mA	10 mA	5 Amp	250mA	0.3A / 1A	0.1 / 1A 0.3 / 2A
Process Sealed	•	IP67	IP67	IP68	IP68			
PCB Mount Options								
Thru-hole	•	•	•		•	•	•	•
Vertical	•	•	•	•	•			•
Right Angle	•					•	•	•
Panel Mount		•	•	•	•			•
Wire Leads		•	•	•	•			
Solder Lug		•	•					
Surface Mount								
Quick Connect								
Page No.	A-105	A-108	A-114	A-118	A-120	A-127	A-131	A-139

ELUM™ Series
Right Angle Illuminated Latching Pushbutton

LEAD FREE COMPATIBLE OPTION

Features/Benefits

- *SPDT (N.O. & N.C.)*
- *Low height above PCB*
- *Reliable self-cleaning contact*
- *Surface-mount or thru-hole PCB*
- *Standard or custom actuator*
- *Central LED illumination*
- *Latching or Momentary*
- *Long travel. Smooth feel*
- *RoHS compliant and compatible*

Typical Applications

- *Telecom network equipment*
- *Automotive electronics*
- *Consumer electronics*
- *Computer, server, modem, data storage*
- *Professional instrumentation, medical*

Patent Numbers
6,974,924 B2 US
EP1583118B1 Europe

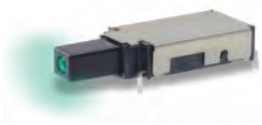

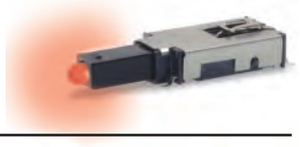

Materials

FIXED CONTACTS: Stainless steel, silver plated with gold flash
TERMINALS: Stainless steel, silver plated
MOVABLE CONTACTS: Copper alloy, silver plated with gold flash
BASE: Glass filled LCP (UL94V-0)
ACTUATOR: Glass filled nylon 4/6 (UL94V-0)
COVER: Stainless steel

Electrical

MAXIMUM POWER: 3.5 VA
MIN./MAX. VOLTAGE: 20 mV – 50 VDC
MIN./MAX. CURRENT: 0.01 mA – 250 mA
DIELECTRIC STRENGTH: ≥ 250 Vrms
CONTACT RESISTANCE: ≤ 50 mΩ
INSULATION RESISTANCE: ≥ 10^9 Ω
BOUNCE TIME: ≤1 ms
LED SPECIFICATIONS: See page A-5

Mechanical

OPERATING FORCE: 2.5 N at Full Travel
SWITCHING TRAVEL: .067" (1.7 mm)
LATCH TRAVEL: .131" (3.6 mm)
FULL TRAVEL: .200" (5.1 mm)

Operating Environment

OPERATING TEMPERATURE: -40˚C TO 80˚C.
STORAGE TEMPERATURE: -40˚C TO 80˚C.
RELATIVE HUMIDITY: 90% R.H. @ 80˚C.
OPERATING LIFE: 30,000 Cycles.
VIBRATION: Per EIA 186-E Method
MECHANICAL SHOCK: Per EIA 186-E Method 12.
OVERLOAD: Withstands 40 N for 1 minute without damage

Process Environment

SOLDERABILITY: According to Mil STD 202F Method 208D or EIA RS-186E Method 9.
LEAD FREE PROCESS COMPATIBLE: 260˚C peak, 10 seconds Max. above 250° C.
WASHING PROCESS: No clean process compatible (SMT)
Bottom wash compatible (Thru-hole)
SHEAR TEST (SWITCH/PCB): > 40 N

Packaging

"SA" Terminal Style SMT: Tape and reel per EIA 481-2 (450/reel)
"TH" Terminal Style PC: Tray (60/tray)

NOTE: Any models supplied with Q, contact material are RoHS compliant.

NOTE: Specifications and materials listed above are for switches with standard options. For information on specific and custom switches, please contact Customer Service.

Build-A-Switch

To order, simply select desired option from each category and place in the appropriate box.

E L U M — □ □ — □ □ — Q — □ — □ □ □

Designation
ELUM ELUM Series

Switch Function
OA Momentary
OC*** Momentary short travel
EE Latching (push-push)

Terminal Style
TH Right Angle, PC thru-hole
SA Right Angle, surface mount

Contact Material*
Q Silver with gold flash

Illumination
(NONE) Models without illumination
1 LED White
2 LED Bi-color – Red (Green)
3 LED Red
5 LED Amber
6 LED Green
7 LED Blue
8 LED Bi-Color – Amber (Green)

Actuator Style**
C02 Black without window
C12 Black with window
C22 Black with window and snap feature for custom actuators

* Other plating options available, please contact Customer Service.
** Custom actuators available, please contact Customer Service.
*** Short travel available in momentary only.

Third Angle Projection

Dimensions are shown: Inches (mm)
Specifications and dimensions subject to change

ELUM™ Series
Right Angle Illuminated Latching Pushbutton

STANDARD OPTIONS

ELUMEESAQ7C12

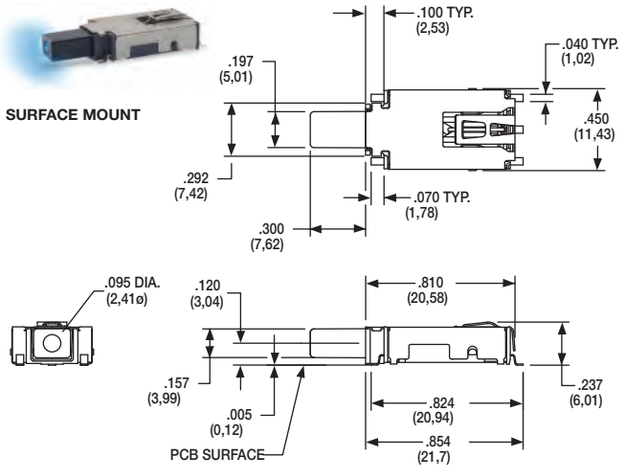

ACTUATOR SHOWN EXTENDED POSITION

ELUMOATHQ6C12

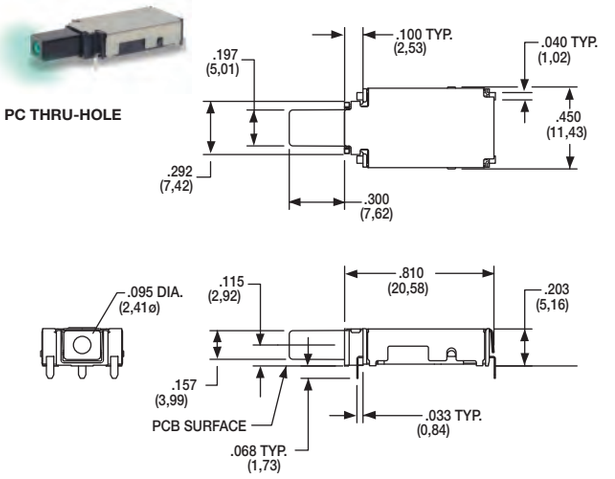

ACTUATOR SHOWN EXTENDED POSITION

ELUMEESAQ3C22

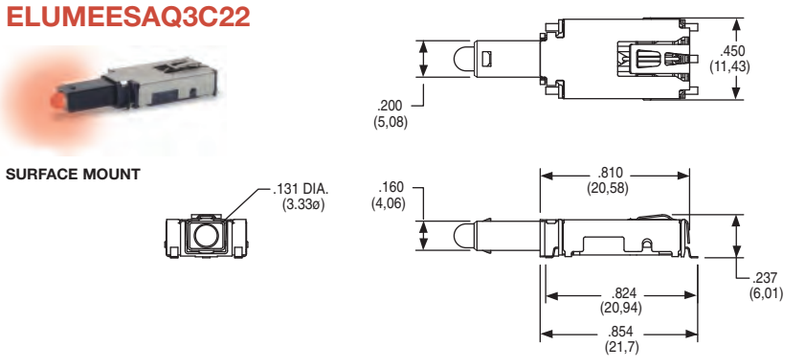

ACTUATOR SHOWN EXTENDED POSITION

DESIGNATION

E L U M

ELUM ELUM SERIES, Illuminated Latching Pushbutton

SWITCH FUNCTION

OPTION CODE	NO. OF POLES	POSITION 1 SWITCH FUNCTION	POSITION 1 CONNECTED TERMINALS	POSITION 2 SWITCH FUNCTION	POSITION 2 CONNECTED TERMINALS	SCHEMATIC
OA / OC	SP Momentary	ON	3 – 4	ON (Mom.)	3 – 2	SPDT: 3 C, 4 NC, NO 2; 5, 1; + Anode – Cathode
EE	SP Latching (Push-Push)	ON	3 – 4	ON	3 – 2	

For SPST N.O. function, only terminals 3 & 2 are used.
For SPST N.C. function, only terminals 3 & 4 are used.
Circuit: Make before break

LED pins 1 & 5 are independent of switch function.

NOTE:
For bi-color LED's the polarity must be reversed to alternate the color

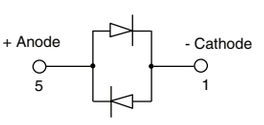

Third Angle Projection

Dimensions are shown: Inches (mm)
Specifications and dimensions subject to change

ELUM™ Series
Right Angle Illuminated Latching Pushbutton

TERMINAL STYLE

SA RIGHT ANGLE, SURFACE MOUNT

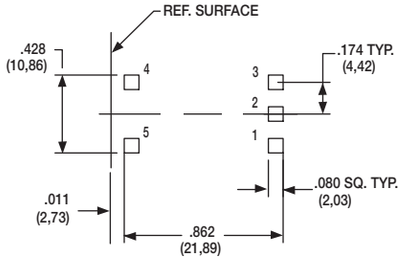

PCB MOUNTING

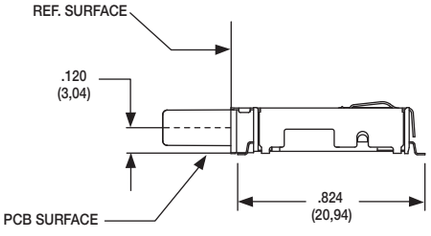

Terminal 5 = LED Anode

TH RIGHT ANGLE, PC THRU-HOLE

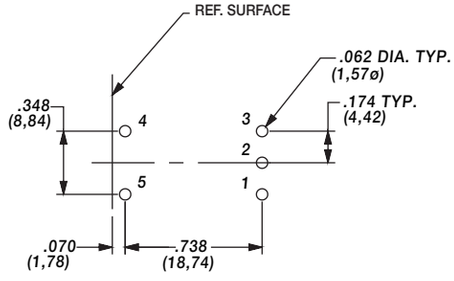

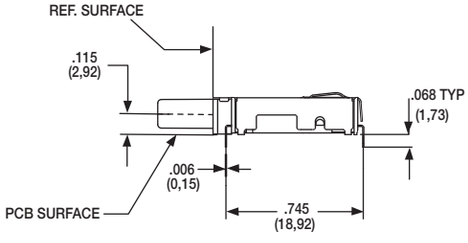

Terminal 5 = LED Anode

CONTACT MATERIAL

OPTION CODE	CONTACT MATERIAL	TERMINAL PLATING	RATINGS
Q	SILVER WITH GOLD FLASH	SILVER	250 mA

* Note: See Technical Data section of this catalog for RoHS compliant and compatible definitions and specifications.

FIXED CONTACTS AND TERMINALS: Stainless steel, silver plated with gold flash
MOVABLE CONTACTS: Copper alloy, silver plated with gold flash

NOTE: Any models supplied with Q, contact material are RoHS compliant.

ILLUMINATION

OPTION CODE	ILLUMINATION TYPE	TYPICAL INTENSITY* MIN	MAX	PEAK WAVELENGTH	Vf Forward Voltage
		(mcd)		(nm)	
0	Model without illumination	N/A		N/A	
1	LED Super White	4,000	5,000	N/A	3.5
2	LED Bi-Color – Red (Green)	10	20	635/565	2.0
3	LED Red	4	8	700	2.0
5	LED Amber	35	50	610	2.0
6	LED Green	35	50	565	2.0
7	LED Super Blue	800	1,500	470	3.8
8	LED Bi-Color – Amber (Green)	10	10	585/565	2.0

*LED FORWARD CURRENT: 20 mA
LED FORWARD VOLTAGE: see chart above
LED REVERSE VOLTAGE: 5.0 V MAX

* For information on specific and custom LED, please contact Customer Service.

Third Angle Projection

Dimensions are shown: Inches (mm)
Specifications and dimensions subject to change

ACTUATOR STYLE*

C02 BLACK WITHOUT WINDOW

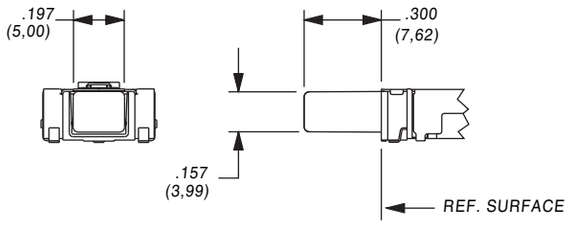

C12 BLACK WITH WINDOW

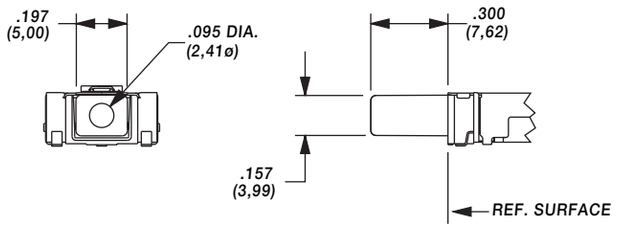

C22 BLACK WITH WINDOW AND SNAP FEATURE TO ACCEPT CUSTOM CAP

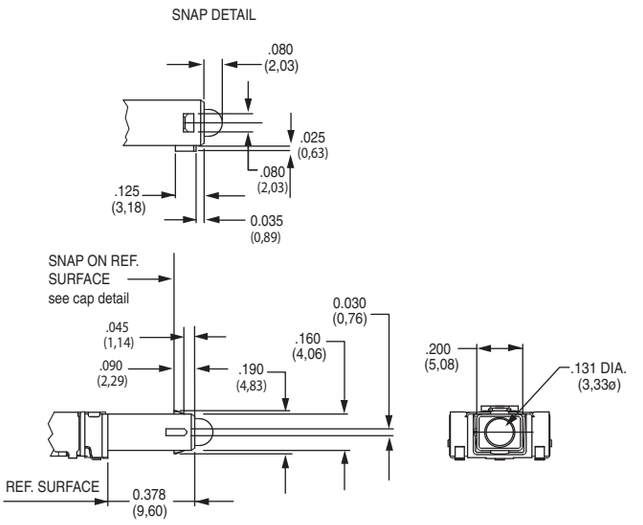

* Custom actuators available, please contact Customer Service.

FORCE TRAVEL DIAGRAM

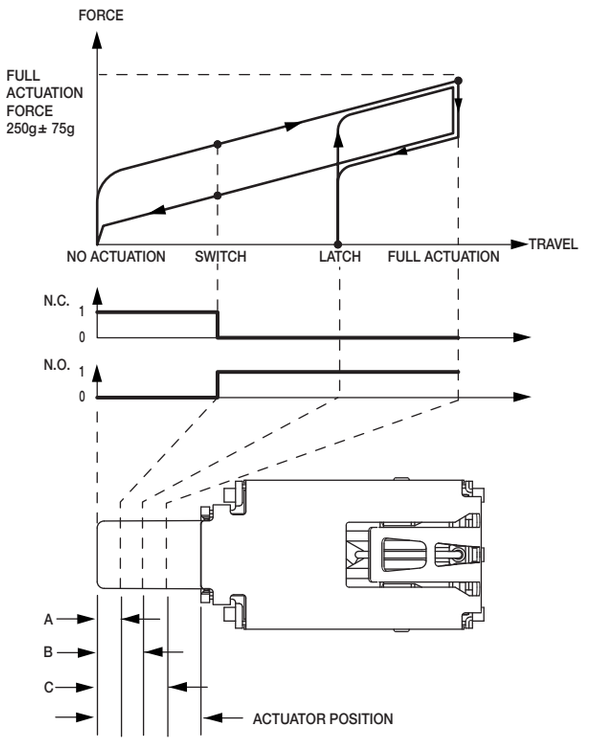

OA, EE ACTUATOR POSITION			
A	SWITCH POINT	.067 ±.020	1,7 ± 0.5mm
B	LATCH	.131 ±.020	3,3 ± 0.5mm
C	FULL ACTUATION	.200 ±.020	5,1 ± 0.5mm

OC ACTUATOR POSITION			
A	SWITCH POINT	.067 ±.020	1,7 ± 0.5mm
C	FULL ACTUATION	.098 ±.020	2,5 ± 0.5mm

TAPE & REEL

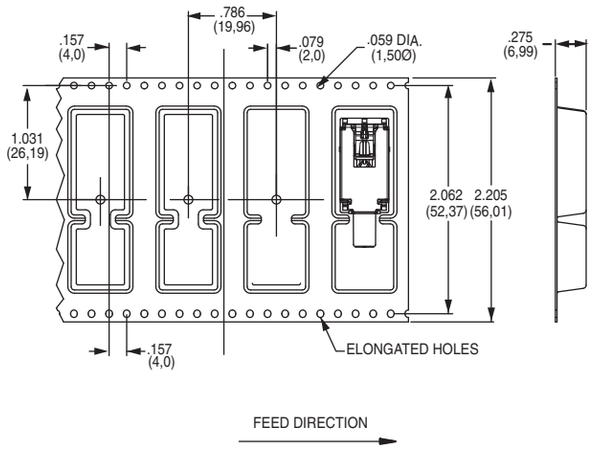

Third Angle Projection

Dimensions are shown: Inches (mm)
Specifications and dimensions subject to change

ELUM™ Series
Right Angle Illuminated Latching Pushbutton

AVAILABLE HARDWARE

Cap

PART NO.

957C00000 High temperature black cap with universal standby symbol

956C02000 High temperature black cap with no symbol

Material: 4/6 Nylon SMT compatible

Cap

PART NO.

181D01000 Paint and Laser Etched with black paint and universal standby symbol

Material: Clear polycarbonate

Cap

PART NO.

181D00000 Paint and laser etched with white paint underlay and black paint with universal standby symbol.

Material: Clear polycarbonate

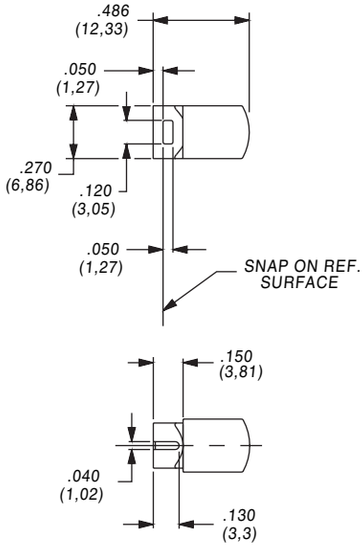

NOTE: Caps are for use with the C22 actuator style. Other colors and symbols available, consult Customer Service Center.

CAP INSTALLATION

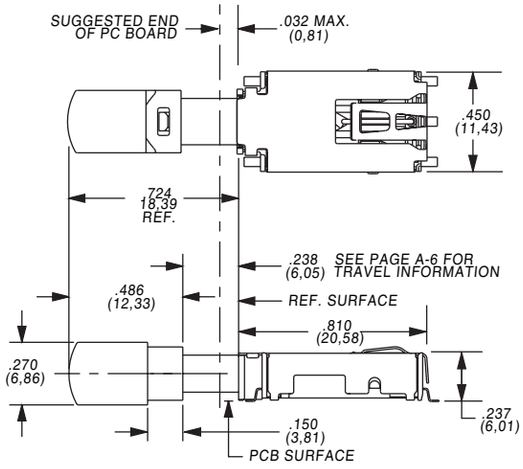

VIEW WITH 957C CAP INSTALLED

Third Angle Projection

Dimensions are shown: Inches (mm)
Specifications and dimensions subject to change

EP Series
Sealed Tiny Pushbutton Switches

Features/Benefits

- ***Sealed against solder & cleaning processes***
- ***Thru-hole and surface mount models***
- ***Snap-fitting actuator accepts standard caps***
- ***Tape & reel packaging available***
- ***RoHS compliant models available***

Models Available

Typical Applications

- ***Telecommunications and networking equipment***
- ***Computers and peripherals***
- ***Instrumentation and controls***

Specifications

CONTACT RATING: B contact material: 0.4 VA max. @ 20 V AC or DC max. See page A-13 for additional ratings.

ELECTRICAL LIFE: EP11, EP21 models: 60,000 make-and-break cycles at full load. EP12 models: 30,000 cycles.

CONTACT RESISTANCE: Below 20 mΩ typ. initial @ 2-4 V DC, 100 mA, for both silver and gold plated contacts.

INSULATION RESISTANCE: 10^9 Ω min.

DIELECTRIC STRENGTH: 1000 Vrms min. @ sea level.

OPERATING TEMPERATURE: –30°C to 85°C.

SOLDERABILITY: Per MIL-STD-202F method 208D, or EIA RS-186E method 9 (1 hour steam aging).

DEGREE OF PROTECTION: IP57; Protection against harmful dust deposit, full-scale voltage protection, temporary immersion.

PACKAGING: Surface mount switches standard in anti-static tape and reel packaging per EIA 481-3, see page A-14 for drawings and reel information. Tape and cover strip are conductive for use near statically sensitive components, consult Customer Service Center.

Materials

CASE & BUSHING: High temperature material, glass filled nylon 4/6, flame retardant, heat stabilized (UL 94V-0) on EP11 / EP12 models; glass filled nylon 6/6 on EP21.

PLUNGER: Thermoplastic polyester or glass filled nylon (UL 94V-0), with internal o-ring seal. SA surface mount: High temperature material, glass filled LCP (UL 94V-0).

SWITCH SUPPORT: Brass, matte-tin plated.

CONTACTS & TERMINALS: B contact material: Copper alloy, with gold plate over nickel plate. See page A-13 for additional contact materials.

TERMINAL SEAL: Epoxy.

NOTE: Any models supplied with Q, B, P, S, R or G contact material are RoHS compliant.

NOTE: Specifications and materials listed above are for switches with standard options. For information on specific and custom switches, consult Customer Service Center.

CAUTION: PC mounting layouts and pads as shown are designed to be compatible with the latest equipment and reflow techniques. Care should be taken in the design and location of PC lands to suit individual needs. Orientation relative to reflow direction may significantly impact solder joint integrity.

Build-A-Switch

To order, simply select desired option from each category and place in the appropriate box. Available options are shown and described on pages A-10 thru A-14. For additional options not shown in catalog, consult Customer Service Center. All models are process sealed to withstand machine soldering temperatures and pressure wash cleaning methods.

Switch Function
- **EP11** SPST Off-Mom.
- **EP12** SPDT On-Mom.
- **EP21** DPST Off-Mom.

Plunger
- **S** .215" high
- **S1** .110" high
- **S2** .465" high
- **FP** Flush
- **R** Snap-fitting, .215 high

Bushing
- **D1** Unthreaded

Terminations
- **A** Right angle, PC thru-hole
- **C** PC Thru-hole
- **AV** Vertical right angle, PC thru-hole
- **AV3** Vertical right angle, snap-in, PC thru-hole
- **SA** Right angle, surface mount
- **SA1** Right angle, surface mount rear facing
- **V3** Vertical mount, v-bracket
- **V31** Vertical mount, v-bracket, snap-in (EP11 & EP12 only)
- **W** Wire wrap

Contact Material
- **B** Gold
- **P** Gold, matte-tin
- **Q** Silver
- **S** Silver, matte-tin
- **G** Gold over silver
- **R** Gold over silver, matte tin

Seal
- **E** Epoxy

Dimensions are shown: Inches (mm)
Specifications and dimensions subject to change

EP Series
Sealed Tiny Pushbutton Switches

SWITCH FUNCTION

NO. POLES	MODEL NO.	SWITCH FUNCTION POS. 1 (C&K marking on opposite side)	SWITCH FUNCTION POS. 2 (C&K marking on opposite side)	CONNECTED TERMINALS POS. 1 (C&K marking on opposite side)	CONNECTED TERMINALS POS. 2 (C&K marking on opposite side)	SCHEMATIC
SP	EP11	OFF	MOM.	OPEN	1-3	SPST 1 3
	EP12	ON	MOM.	2-1	2-3	SPDT NC 1 2 (COMM) 3 NO

SPDT

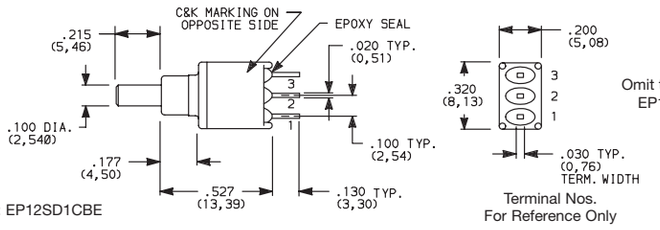

Omit terminal 2 for EP11 models.

Part number shown: EP12SD1CBE

DP	EP21	OFF	MOM.	OPEN	1-3,4-6	DPST 1 3 4 6

DPST

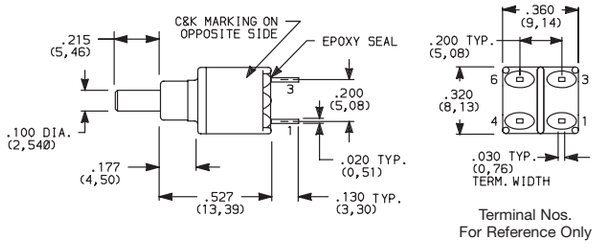

Part number shown: EP21SD1CBE

MOM. = Momentary

All models cULus with all options when ordered with G, Q, R or S contact material.

PLUNGER

S .215" HIGH

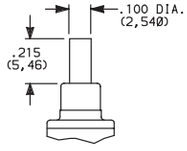

S1 .110" HIGH

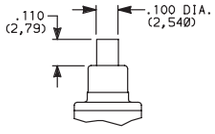

S2 .465" HIGH

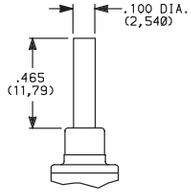

FP FLUSH PLUNGER

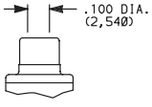

R SNAP-FITTING

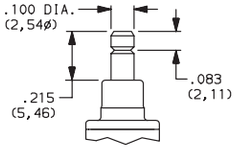

S1& S2 actuators are not available with EP12 & EP21 models.

FP & R actuators are not available with EP21 model.

NOTE: Caps available for plunger options, see page A-14.

BUSHING

D1 UNTHREADED

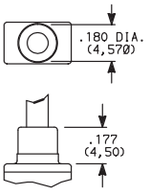

NOTE: Internal actuator o-ring standard.

Third Angle Projection

Dimensions are shown: Inches (mm)
Specifications and dimensions subject to change

TERMINATIONS

C PC THRU-HOLE

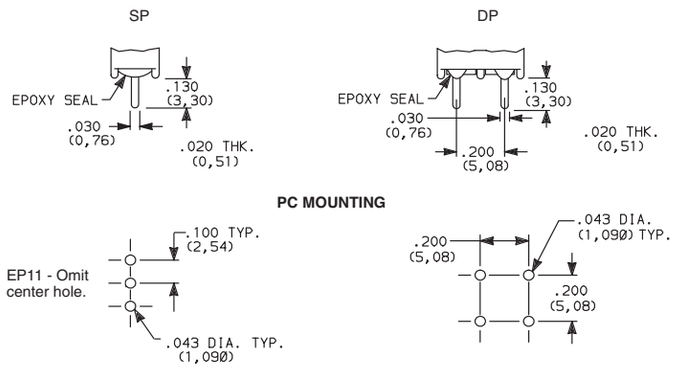

SP and DP

W WIRE WRAP

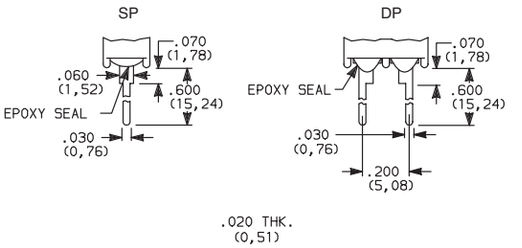

SP and DP

A RIGHT ANGLE, PC THRU-HOLE

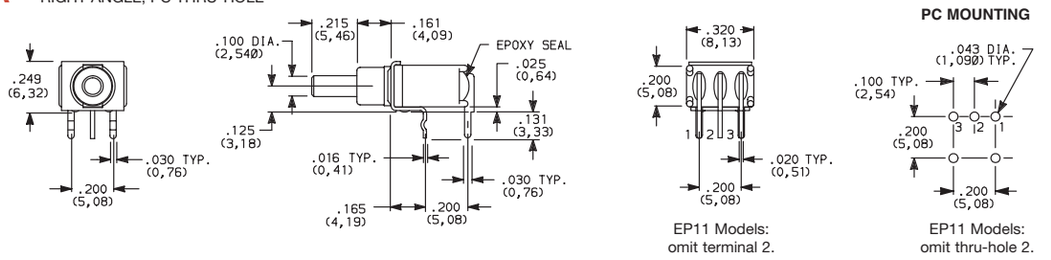

EP11 Models: omit terminal 2.

EP11 Models: omit thru-hole 2.

EP12SD1ABE
SPDT

A RIGHT ANGLE, PC THRU-HOLE

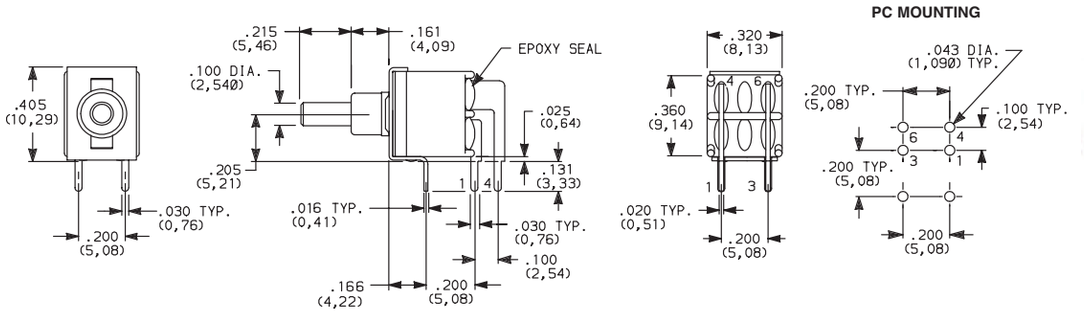

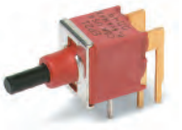

EP21SD1ABE
DPST

AV VERTICAL RIGHT ANGLE, PC THRU-HOLE

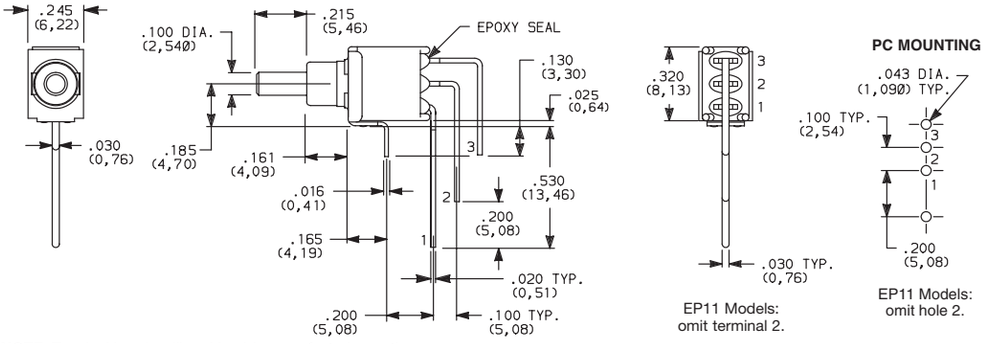

EP11 Models: omit terminal 2.

EP11 Models: omit hole 2.

EP12SD1AVBE
SPDT

NOTE: Terminal bend radii and lead-in manufacturing option.

Third Angle Projection

Dimensions are shown: Inches (mm)
Specifications and dimensions subject to change

EP Series
Sealed Tiny Pushbutton Switches

TERMINATIONS

AV VERTICAL RIGHT ANGLE, THRU-HOLE

EP21SD1AVBE
DPST

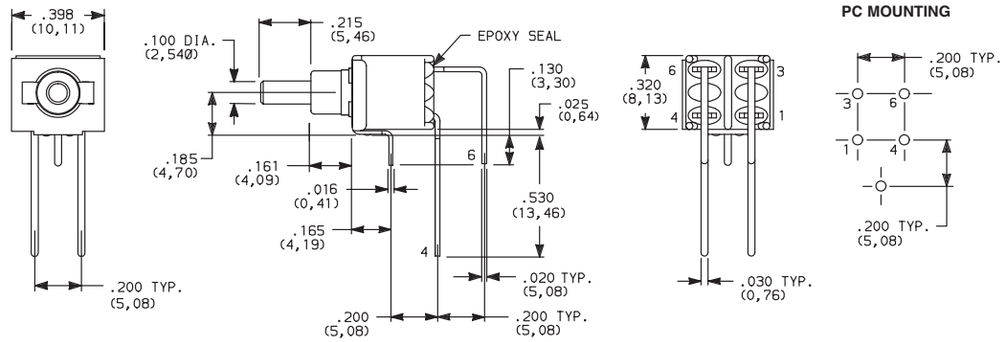

NOTE: Terminal bend radii and lead-in manufacturing option.

AV3 VERTICAL RIGHT ANGLE, SNAP-IN, PC THRU-HOLE

EP12SD1AV3BE
SPST

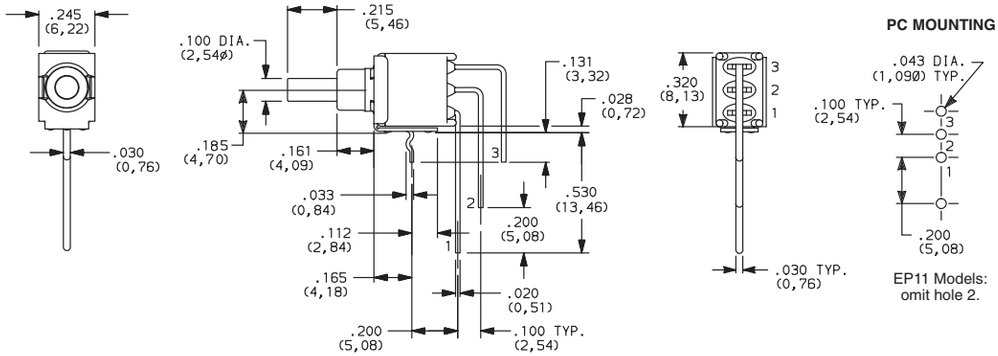

SA RIGHT ANGLE, SURFACE MOUNT

EP12SD1SAPE
SPDT

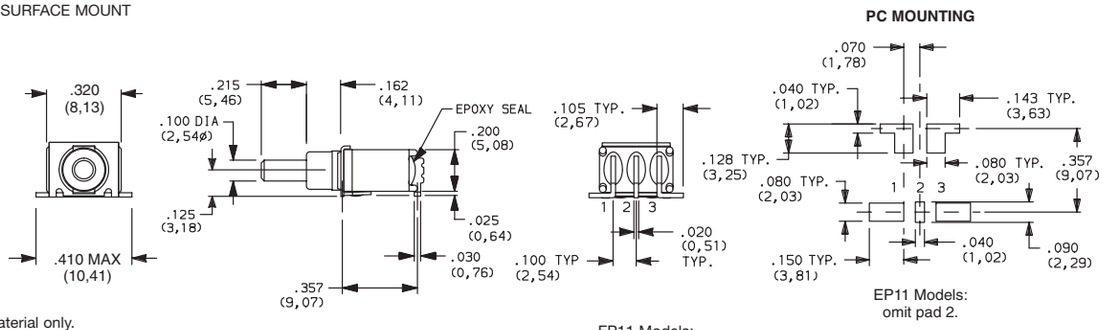

Available with P contact material only.
Not Available on DPST models.

SA1 RIGHT ANGLE, SURFACE MOUNT

EP12SD1SA1BE
SPDT

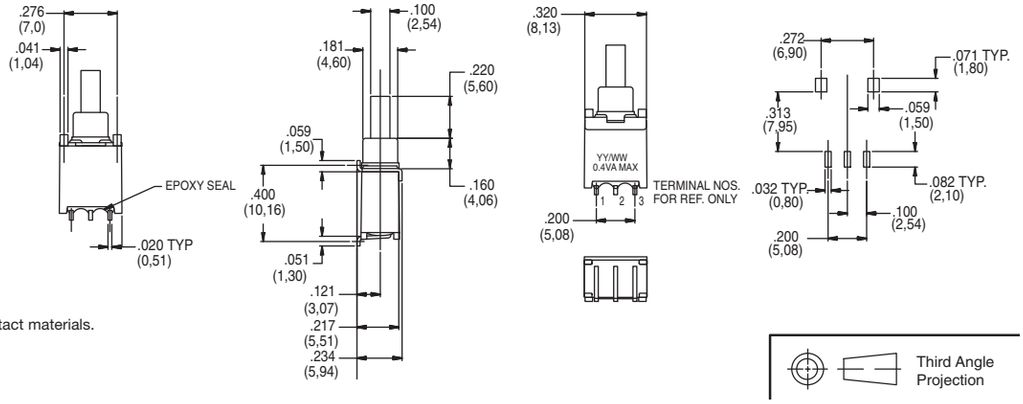

SA1 is only available with B and P contact materials.
Not Available on DPST models.

Third Angle Projection

Dimensions are shown: Inches (mm)
Specifications and dimensions subject to change

TERMINATIONS

V3 VERTICAL MOUNT, V-BRACKET

V31 VERTICAL MOUNT, V-BRACKET, SNAP-IN

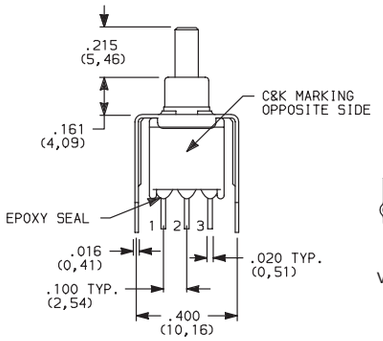

EP11 Models:
omit terminal 2.

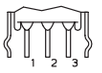

V31 SNAP-IN

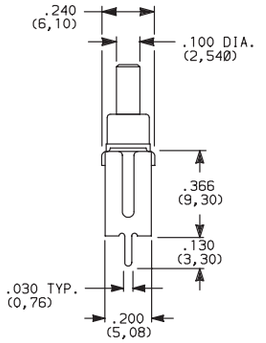

PC MOUNTING

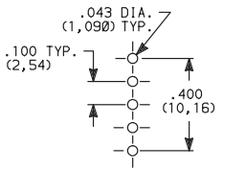

EP11 Models:
omit centerhole.

EP12SD1V3BE
SPDT

V3 VERTICAL MOUNT, V-BRACKET

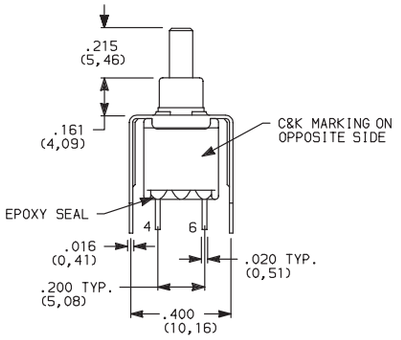

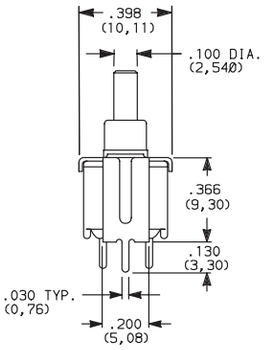

PC MOUNTING

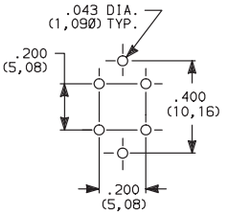

EP21SD1V3BE
DPST

CONTACT MATERIAL

OPTION CODE	CONTACT MATERIAL	TERMINAL PLATING	RATINGS	
B	GOLD [1]	GOLD [1]	LOW LEVEL/DRY CIRCUIT	0.4 VA MAX. @ 20 V AC OR DC MAX.
P		MATTE-TIN [6]		
Q	SILVER [4,5]	SILVER [5]	POWER	1 AMP @ 120 V AC OR 28 V DC.
S		MATTE-TIN [6]		
G	GOLD OVER SILVER [2,3]	GOLD [3]	LOW LEVEL/DRY CIRCUIT OR POWER	0.4 VA MAX @ 20 V AC OR DC MAX. OR 1 AMP @ 120 V AC OR 28 V DC.
R		MATTE-TIN [6]		

* Note: See Technical Data section of this catalog for RoHS compliant and compatible definitions and specifications.

[1] CONTACTS & TERMINALS: Copper alloy, with gold plate over nickel plate.
[2] END CONTACTS: Coin silver, with gold plate over nickel plate.
[3] CENTER CONTACTS & ALL TERMINALS: Copper alloy, with gold plate over nickel plate.
[4] END CONTACTS: Coin silver, silver plated.
[5] CENTER CONTACT & ALL TERMINALS: Copper alloy, silver plated.
[6] TERMINALS: Copper alloy, with matte tin over nickel plate.

NOTE: Any models supplied with Q, B P, S ,R or G contact material are RoHS compliant.

All models c UL us with all options when ordered with G, S, R or Q contact material.

SEAL

E EPOXY SEAL

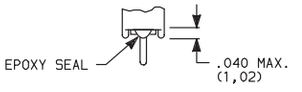

Third Angle Projection

Dimensions are shown: Inches (mm)
Specifications and dimensions subject to change

EP Series
Sealed Tiny Pushbutton Switches

AVAILABLE HARDWARE

Cap

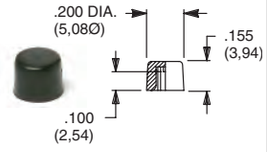

PART NO.

508101000 WHITE
508102000 BLACK
508103000 RED

Material: Nylon
Finish: Gloss

Not for use on S1 plunger

Cap

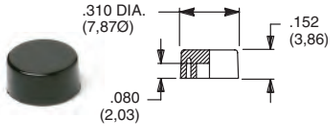

PART NO.

465801000 WHITE
465802000 BLACK
465803000 RED

Material: Nylon
Finish: Gloss

Not for use on S1 plunger

Cap
Compatible with snap-fitting plungers EP11 & EP12 Models. R option only.

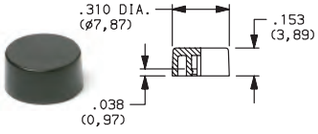

PART NO.

585A01000 WHITE
585A02000 BLACK
585A03000 RED

Material: Nylon
Finish: Gloss

Cap
Compatible with snap-fitting plungers EP11 & EP12 Models. R option only.

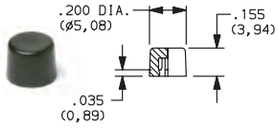

PART NO.

785A01000 WHITE
785A02000 BLACK
785A03000 RED

Material: Nylon
Finish: Gloss

NOTE: Other colors available, consult Customer Service Center.

TAPE & REEL

For part number EPXX-SA/SA1

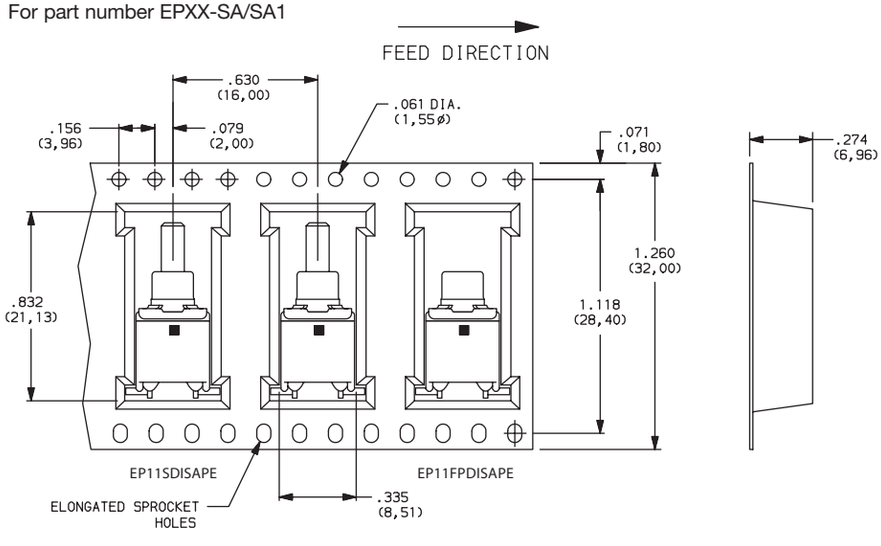

REEL INFORMATION	
OUTSIDE DIAMETER	13.00 (330,0)
PILOT HOLE	.512 (13,0)
QUANTITY PER REEL	600

Third Angle Projection

Dimensions are shown: Inches (mm)
Specifications and dimensions subject to change

TP Series
Tiny Pushbutton Switches

Features/Benefits

- ***Subminiature size—capable of switching 1 AMP***
- ***Vertical & right angle terminations***
- ***PC & panel mount models***
- ***Snap-in front panel mounting available***
- ***Epoxy terminal seal-compatible with bottom wash cleaning***
- ***RoHS compliant models available***

Models Available

Typical Applications

- ***Telecommunications and networking equipment***
- ***Computers and peripherals***
- ***Instrumentation and controls***

Specifications

CONTACT RATING: B contact material: 0.4 VA max. @ 20 V AC or DC max. Q contact material: 1 AMP @ 120 V AC or 28 V DC. See page A-19 for additional ratings.

ELECTRICAL LIFE: TP11, TP21 MODELS: 60,000 make-and-break cycles at full load. TP12 MODELS: 30,000 cycles.

CONTACT RESISTANCE: Below 20 mΩ typ. initial @ 2-4 V DC, 100 mA, for both silver and gold plated contacts.

INSULATION RESISTANCE: $10^9\Omega$ min.

DIELECTRIC STRENGTH: 1000 Vrms min. @ sea level.

OPERATING TEMPERATURE: –30°C to 85°C.

SOLDERABILITY: Per MIL-STD-202F method 208D, or EIA RS-186E method 9 (1 hour steam aging).

NOTE: Any models supplied with Q, B, P, R or G contact material are RoHS compliant.

NOTE: Specifications and materials listed above are for switches with standard options. For information on specific and custom switches, consult Customer Service Center.

Materials

CASE: Glass filled nylon 4/6 or 6/6, flame retardant, heat stabilized or diallyl phthalate (DAP), (UL 94V-0).

PLUNGER: Thermoplastic polyester (UL 94V-0).

CAP & FRAME: Nylon, black standard.

BUSHING: Brass, nickel plated.

HOUSING: Stainless steel.

SWITCH SUPPORT: Brass, matte-tin plated.

END CONTACTS: B contact material: Copper alloy, with gold plate over nickel plate. Q contact material: Coin silver, silver plated. See page A-19 for additional contact materials.

CENTER CONTACT & ALL TERMINALS: B contact material: Copper alloy, with gold plate over nickel plate. Q contact material: Copper alloy, silver plated. See page A-19 for additional contact materials.

TERMINAL SEAL: Epoxy. Refer to soldering and cleaning in Technical Data Chapter

HARDWARE: Nut & Locking Ring: Brass nickel plated. Lockwasher: Steel, nickel plated.

Build-A-Switch

To order, simply select desired option from each category and place in the appropriate box. Available options are shown and described on pages A-16 thru A-20. For additional options not shown in catalog, consult Customer Service Center. All models have epoxy terminal seal and are compatible with all “bottom-wash” PCB cleaning methods.

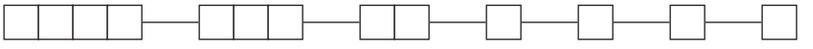

Switch Function
- **TP11** SPST Off-Mom.
- **TP12** SPDT On-Mom.
- **TP21** DPST Off-Mom.

Actuator or Bushing
- **SH** .155" high plunger, threaded, .220" high bushing, flat
- **SH8** .155" high plunger, unthreaded, .220" high bushing, round
- **SH9** .155" high plunger, unthreaded, .220" high bushing, flat
- **J81** Snap-in with frame
- **LT** .215" high plunger, threaded, .310" high bushing, flat
- **LT9** .215" high plunger, unthreaded, .310" high bushing, flat
- **MS9** .130" high plunger, .020" high bushing, round

Terminations
- **A** Right angle, PC thru-hole
- **C** PC Thru-hole
- **Z** Solder lug
- **AV** Vertical right angle, PC thru-hole
- **V3** Vertical mount, v-bracket
- **W** Wire wrap

Contact Material
- **B** Gold
- **P** Gold, matte-tin
- **Q** Silver
- **G** Gold over silver
- **R** Gold over silver, matte-tin

Seal
- **E** Epoxy

Cap Color
- **2** Black
- **NONE** Models with no cap
- **1** White

Frame Color
- **2** Black
- **NONE** Models with no frame

Dimensions are shown: Inches (mm)
Specifications and dimensions subject to change

TP Series
Tiny Pushbutton Switches

SWITCH FUNCTION

NO. POLES	MODEL NO.	SWITCH FUNCTION POS. 1	SWITCH FUNCTION POS. 2	CONNECTED TERMINALS POS. 1	CONNECTED TERMINALS POS. 2	SCHEMATIC
		C&K marking on opposite side		C&K marking on opposite side		
SP	TP11	OFF	MOM.	OPEN	1-3	SPST 1 3
	TP12	ON	MOM.	2-1	2-3	SPDT NC 1 2 (COMMON) 3 NO

SPDT

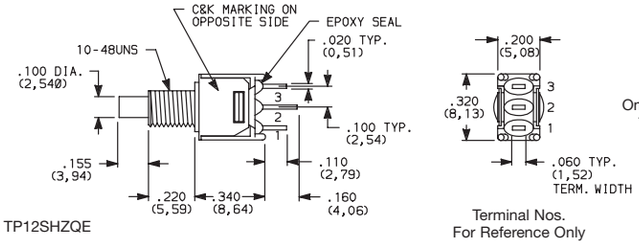

Omit terminal 2 for TP11 models.

Part number shown: TP12SHZQE

DP	TP21	OFF	MOM.	OPEN	1-3,4-6	DPST 1 3 4 6

DPST

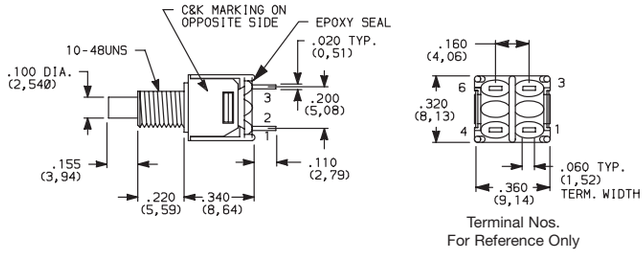

Part number shown: TP21SHZQE

MOM. = Momentary

All models ® with all options when ordered with G, Q or R contact material.

ACTUATOR—SNAP-IN FRONT MOUNT

CAP COLOR
ACTUATOR OR BUSHING
FRAME COLOR

J81 SNAP-IN WITH FRAME

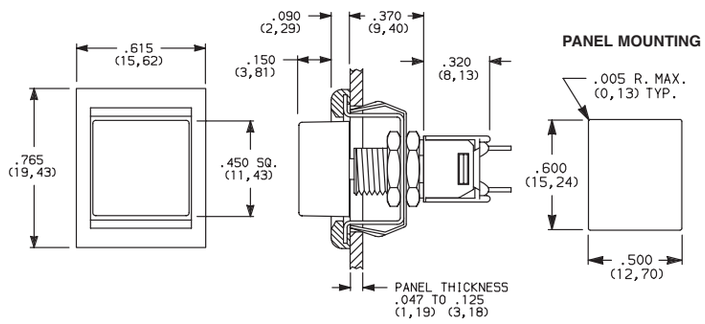

OPTION CODE	CAP COLOR
2	BLACK
1	WHITE

OPTION CODE	FRAME COLOR
2	BLACK
NONE	No Frame Color (J80 option)

Cap and Frame Finish: matte. Other colors available, consult Customer Service Center.

NOTE: Available with Z, C, or W terminations.

NOTE: Caps & frames available separately, see page A-20.

Third Angle Projection

Dimensions are shown: Inches (mm)
Specifications and dimensions subject to change

SH .155" HIGH PLUNGER, .220" HIGH BUSHING, THREADED, FLAT

SH8 .155" HIGH PLUNGER, .220" HIGH BUSHING, UNTHREADED

SH9 .155" HIGH PLUNGER, .220" HIGH BUSHING, UNTHREADED, FLAT

LT .215" HIGH PLUNGER, .310" HIGH BUSHING, THREADED

LT9 .215" HIGH PLUNGER, .310" HIGH BUSHING, UNTHREADED

MS9 .130" HIGH PLUNGER

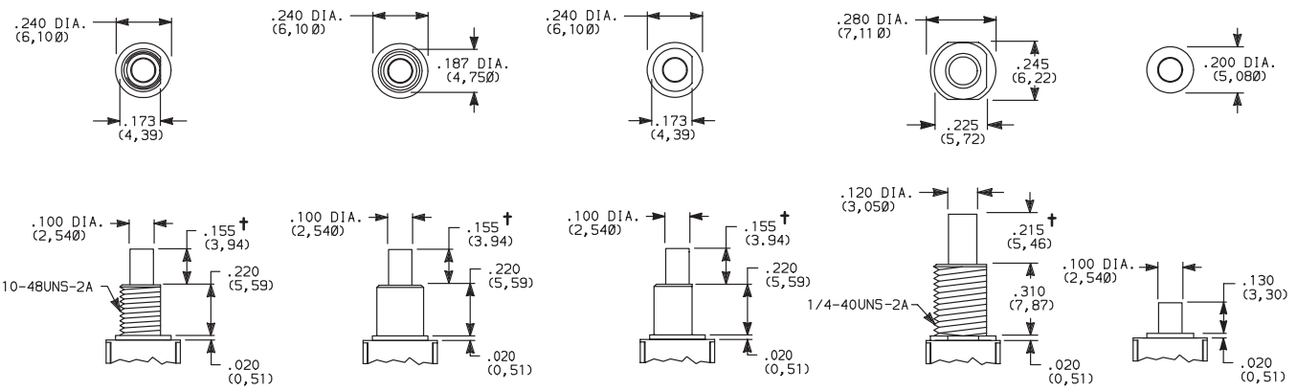

Standard with Z, C, W terminations.

Standard with A, AV, V3 terminations.

Not available with Z terminations.

† Subtract .016 (0,41) for models with A, AV or V3 terminations.

NOTE: Caps available for plunger options, see page A-20.

PANEL MOUNTING

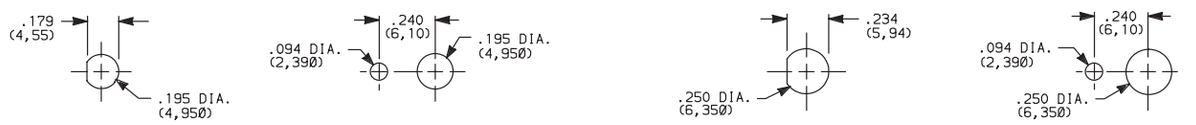

Without locking ring | With standard locking ring | Without locking ring | With standard locking rin

NOTE: One mounting nut, locking ring and lockwasher supplied standard with 10-48 threaded bushings (two nuts with 1/4-40 bushings). Optional mounting nut and locking ring styles and finishes available separately, see section "Technical Data and Additional Hardware".

TERMINATIONS

C PC THRU-HOLE

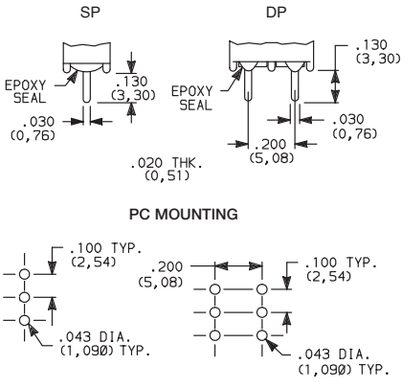

Omit center holes for TP11 models

Z SOLDER LUG

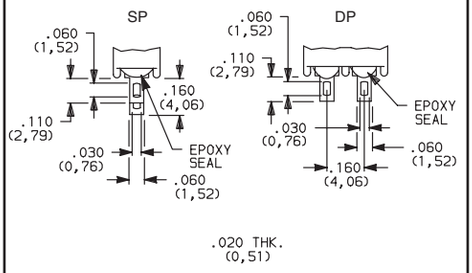

Not available with MS9 bushing or P or R contact material.

W WIRE WRAP

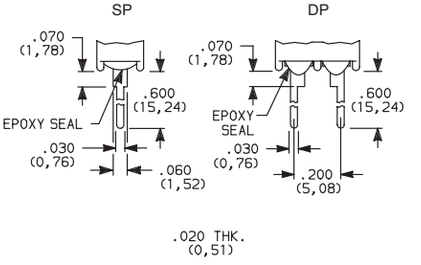

Third Angle Projection

Dimensions are shown: Inches (mm)
Specifications and dimensions subject to change

TP Series
Tiny Pushbutton Switches

TERMINATIONS

A RIGHT ANGLE, PC THRU-HOLE

TP12SH9ABE
SPDT

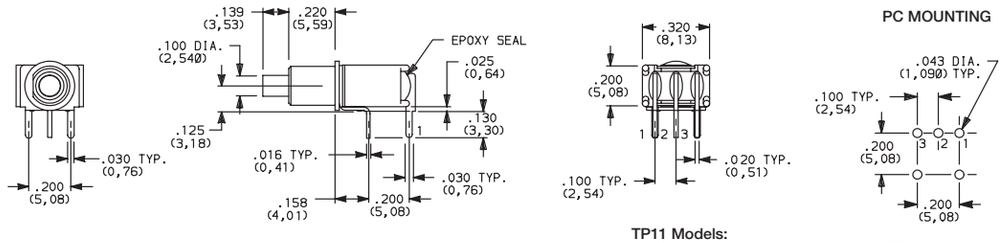

TP11 Models: omit terminal 2.

TP11 Models: omit hole 2.

A RIGHT ANGLE, PC THRU-HOLE

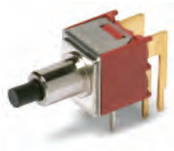

TP21SH9ABE
DPST

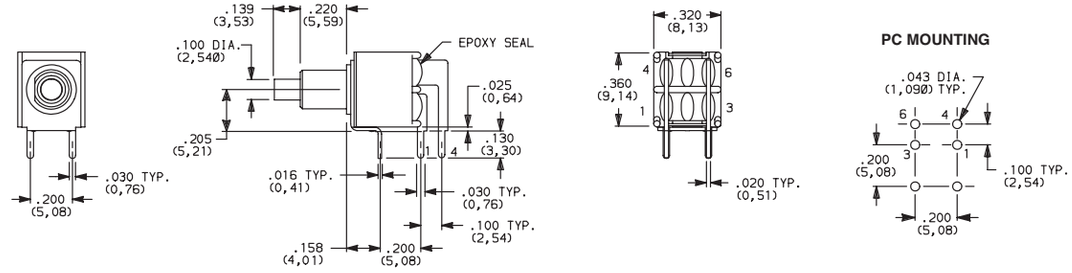

AV VERTICAL RIGHT ANGLE, PC THRU-HOLE

TP12SH9AVBE
SPDT

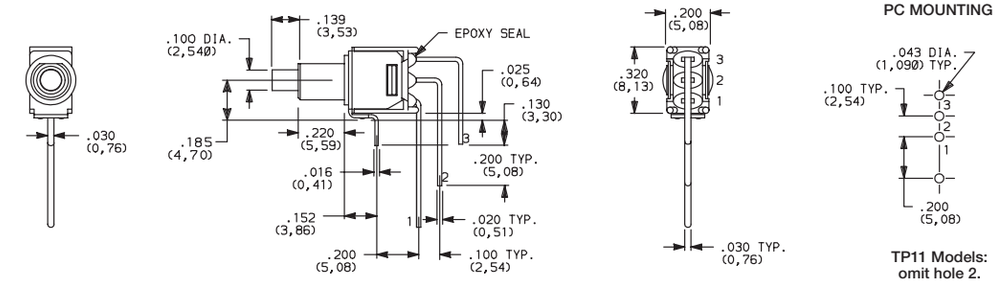

TP11 Models: omit terminal 2.

TP11 Models: omit hole 2.

NOTE: Terminal bend radii and lead-in manufacturing option.

AV VERTICAL RIGHT ANGLE, PC THRU-HOLE

TP21SH9AVBE
DPST

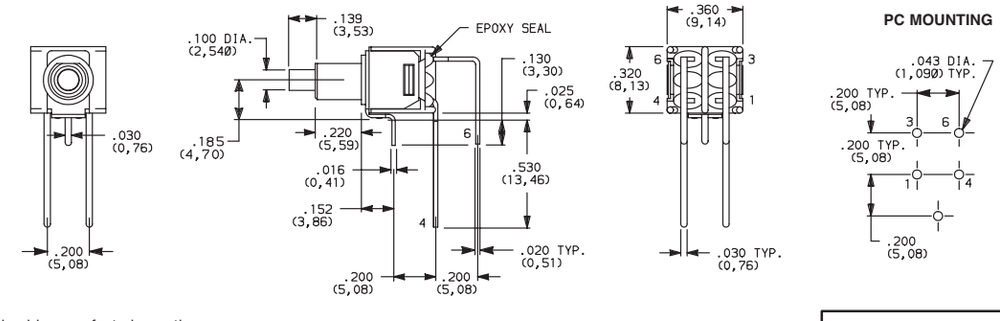

NOTE: Terminal bend radii and lead-in manufacturing option.

Third Angle Projection

Dimensions are shown: Inches (mm)
Specifications and dimensions subject to change

TERMINATIONS

V3 VERTICAL MOUNT, V-BRACKET

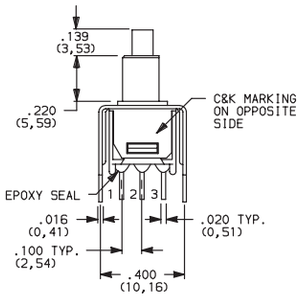

TP11 Models: omit terminal 2.

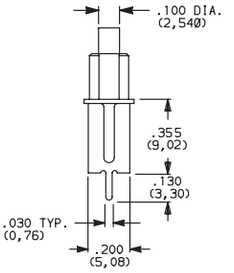

PC MOUNTING

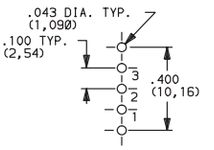

TP11 Models: omit hole 2.

TP12SH9V3BE
SPDT

V3 VERTICAL MOUNT, V-BRACKET

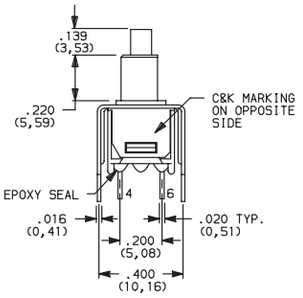

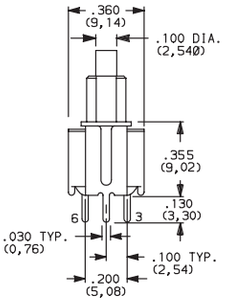

PC MOUNTING

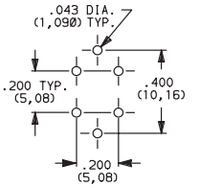

TP21SH9V3BE
DPST

CONTACT MATERIAL

OPTION CODE	CONTACT MATERIAL	TERMINAL PLATING	RATINGS	
B	GOLD [1]	GOLD [1]	LOW LEVEL/DRY CIRCUIT	0.4 VA MAX. @ 20 V AC OR DC MAX.
P		MATTE-TIN [6]		
Q	SILVER [4,5]	SILVER [5]	POWER	1 AMP @ 120 V AC OR 28 V DC.
G	GOLD OVER SILVER [2,3]	GOLD [3]	LOW LEVEL/DRY CIRCUIT OR POWER	0.4 VA MAX @ 20 V AC OR DC MAX. OR 1 AMP @ 120 V AC OR 28 V DC.
R		MATTE-TIN [6]		

* Note: See Technical Data section of this catalog for RoHS compliant and compatible definitions and specifications.

[1] CONTACTS & TERMINALS: Copper alloy, with gold plate over nickel plate.
[2] END CONTACTS: Coin silver, with gold plate over nickel plate.
[3] CENTER CONTACTS & ALL TERMINALS: Copper alloy, with gold plate over nickel plate.
[4] END CONTACTS: Coin silver, silver plated.
[5] CENTER CONTACT & ALL TERMINALS: Copper alloy, silver plated.
[6] TERMINALS: Copper alloy, with matte-tin over nickel plate.

NOTE: Any models supplied with P, R, Q, B or G contact material are RoHS compliant.

All models with all options when ordered with R, G, or Q contact material.
B contact material standard with A, AV, V3 & W terminations.
Q contact material standard with C & Z terminations
P, R contact materials not available with Z terminations.

SEAL

E EPOXY SEAL

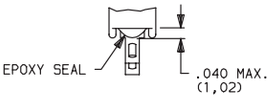

Third Angle Projection

Dimensions are shown: Inches (mm)
Specifications and dimensions subject to change

TP Series
Tiny Pushbutton Switches

AVAILABLE HARDWARE

Cap, .100" DIA. Plungers

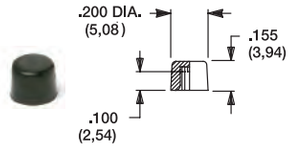

PART NO.

508101000 WHITE
508102000 BLACK

Material: Nylon
Finish: Gloss

Cap, .100" DIA. Plungers
(Recommended for S9 plunger)

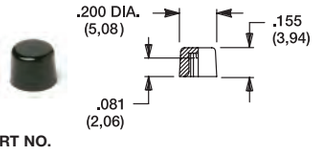

PART NO.

538701000 WHITE
538702000 BLACK

Material: Nylon
Finish: Gloss

Cap, .100" DIA. Plungers

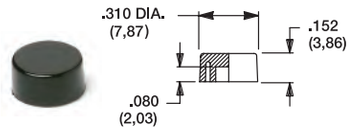

PART NO.

465801000 WHITE
465802000 BLACK

Material: Nylon
Finish: Gloss

Cap, .120" DIA. Plungers

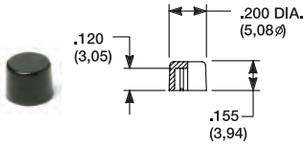

PART NO.

708901000 WHITE
708902000 BLACK

Material: Nylon
Finish: Gloss

Cap, .120" DIA. Plungers

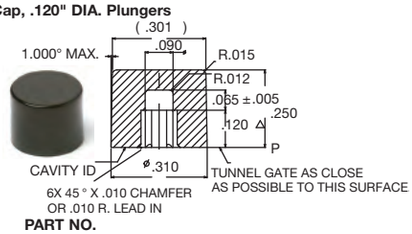

PART NO.

891D01000 WHITE
891D02000 BLACK

Material: Nylon
Finish: Gloss

Cap, J81 option only

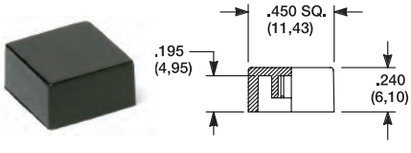

PART NO.

484601000 WHITE
484602000 BLACK

Material: Nylon
Finish: Gloss

PART NO.

798201000 WHITE
798202263 BLACK

Material: Nylon
Finish: Matte

NOTE: Additional nuts, locking rings and lockwashers available separately, see section "Technical Data and Additional Hardware".
Other cap colors available, consult Customer Service Center.

Frames snap into panel opening and are independent from switch mounting. Accurate positioning of the PC mounted switch relative to the panel opening is necessary to provide proper clearance between actuator and frame. Available in two basic styles and four panel thicknesses .047-.125 in. Material: Nylon. Finish: Matte.

TYPICAL APPLICATION

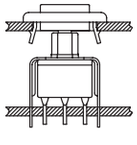

.047" (1,19) PANEL THK.	.062" (1,57) PANEL THK.	.090" (2,29) PANEL THK.	.125" (3,18) PANEL THK.
PART NO.	**PART NO.**	**PART NO.**	**PART NO.**
432502263	**432602263**	**432702263**	**432802263** BLACK

PANEL MOUNTING

For part numbers
432502263, 432602263

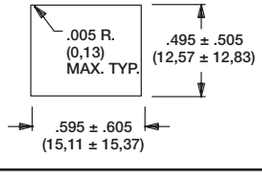

For part numbers
432702263, 432802263

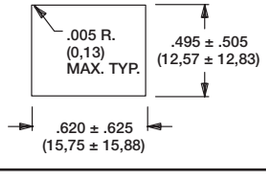

Panel Inserts

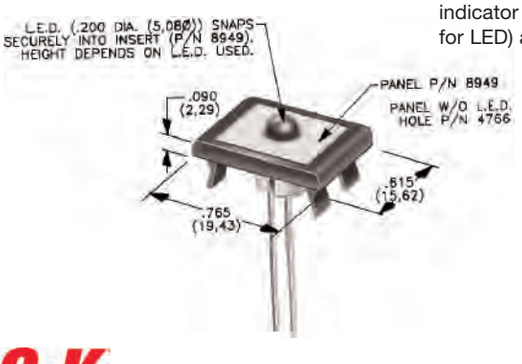

Above frames (part nos. 432XXXXXX) are also available with insert which accepts LED for indicator light assembly. Order insert separately from frame. Blank insert panel (without hole for LED) also available. **LED not included.**

PANEL INSERT WITH HOLE FOR LED	BLANK PANEL INSERT WITHOUT HOLE FOR LED
PART NO.	**PART NO.**
894902000	**476602000** BLACK

Third Angle Projection

Dimensions are shown: Inches (mm)
Specifications and dimensions subject to change

E020 Series
Sealed Snap-acting Momentary Pushbutton Switches

Features/Benefits

- ***Process sealed with disposable splashproof boot***
- ***Long life contact design***
- ***Snap-fitting plunger available***
- ***RoHS compliant models available***

Typical Applications

- ***Instrumentation***
- ***Telecommunications and networking equipment***
- ***Computers and peripherals***

Models Available

Specifications

CONTACT RATING: B contact material (EX25 Models): 0.4 VA max. @ 20 V AC or DC max. G contact material (EX21 Models): 1 AMP @120 V AC or 28 V DC or 0.4 VA max. @ 20 V AC or DC max. Note: Break-before-make contacts. Multi-pole contacts do not make and break simultaneously. See page A-26 for additional ratings.

ELECTRICAL LIFE: 60,000 make-and-break cycles at full load.

CONTACT RESISTANCE: Below 50 mΩ typ. initial @ 2–4 V DC, 100 mA, for both silver and gold plated contacts.

INSULATION RESISTANCE: 10^9Ω min.

DIELECTRIC STRENGTH: 1000 Vrms min. @ sea level.

OPERATING TEMPERATURE: –30°C to 75°C.

CAP INSTALLATION FORCE: 10 lbs. max. permissible.

SOLDERABILITY: Per MIL-STD-202F method 208D, or EIA RS-186E method 9 (1 hour steam aging).

NOTE: Any models supplied with P, R, B or G contact material are RoHS compliant.

NOTE: Specifications and materials listed above are for switches with standard options. For information on specific and custom switches, consult Customer Service Center.

Materials

CASE & BUSHING: Glass filled nylon 6/6, flame retardant (UL 94V-0).

PLUNGER: Glass filled nylon or glass filled polyester (PBT) (UL 94V-0).

SWITCH SUPPORT: Brass or steel, matte-tin.

SWITCH SUPPORT RETAINER: Stainless steel.

N.O. & N.C. CONTACTS: EX25 MODELS: B contact material: Copper alloy, with gold plate over nickel plate. EX21 MODELS: G contact material: Coin silver, with gold plate over nickel plate. See page A-26 for additional contact materials.

COMMON CONTACTS & ALL TERMINALS: Copper alloy, with gold plate over nickel plate. See page A-26 for additional contact materials.

TERMINAL SEAL: Epoxy.

DISPOSABLE BOOT: Vinyl splashproof boot supplied standard. Remove and discard only after soldering and cleaning processes are complete.

Build-A-Switch

To order, simply select desired option from each category and place in the appropriate box. Available options are shown and described on pages A-22 thru A-28. For additional options not shown in catalog, consult our Customer Service Center. All models are process sealed to withstand machine soldering temperatures and pressure wash cleaning methods.

Switch Function
- **E121** SPDT On-Mom. 1 Amp
- **E221** DPDT On-Mom. 1 Amp
- **E125** SPDT On-Mom. 0.4VA
- **E225** DPDT On-Mom. 0.4VA

Plunger
- **S** .282" high
- **M** .331" high, snap-fitting
- **S1** .332" high

Bushing
- **D1** Unthreaded
- **D3** .180" high, unthreaded

Terminations
- **A** Right angle, PC thru-hole
- **AV2** Vertical right angle, PC thru-hole
- **C** PC Thru-hole
- **A3** Right angle, snap-in, PC thru-hole
- **AV3** Vertical right angle, snap-in, PC thru-hole
- **V3** .460" high, V-bracket
- **V4** .630" high, V-bracket
- **V6** .460" high, V-bracket
- **V8** .953" high, V-bracket
- **V31** .460" high, snap-in V-bracket
- **V41** .630" high, snap-in V-bracket
- **V61** .460" high, snap-in V-bracket

Contact Material
- **B** Gold
- **G** Gold over silver
- **P** Gold, matte-tin
- **R** Gold over silver, matte-tin

Seal
- **E** Epoxy and disposable splashproof boot

Dimensions are shown: Inches (mm)
Specifications and dimensions subject to change

E020 Series
Sealed Snap-acting Momentary Pushbutton Switches

SWITCH FUNCTION

NO. POLES	MODEL NO.	SWITCH FUNCTION POS. 1 (C&K marking this side)	SWITCH FUNCTION POS. 2 (C&K marking this side)	CONNECTED TERMINALS POS. 1 (C&K marking this side)	CONNECTED TERMINALS POS. 2 (C&K marking this side)	SCHEMATIC
SP	E121	ON	MOM.	1-3	1-2	SPDT
	E125	ON	MOM.			
DP	E221	ON	MOM.	1-3,4-6	1-2,4-5	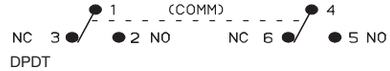 DPDT
	E225	ON	MOM.			

SPDT

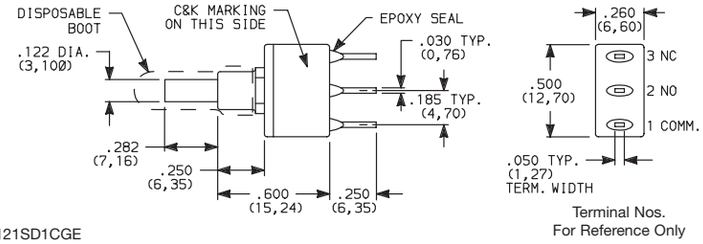

Part number shown: E121SD1CGE

DPDT

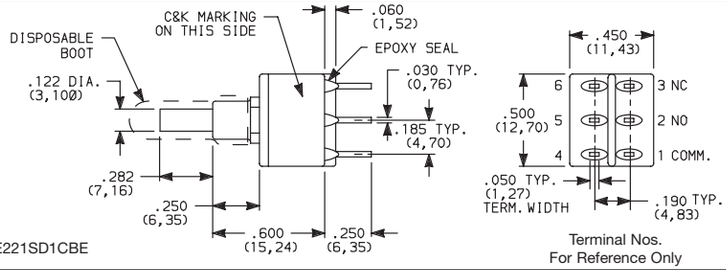

Part number shown: E221SD1CBE

MOM. = Momentary

E121, E221 models with all options when ordered with G or R contact material.

EX25 models must be ordered with B or P contact material.
EX21 models must be ordered with G or R contact material.

PLUNGER

S .282" HIGH

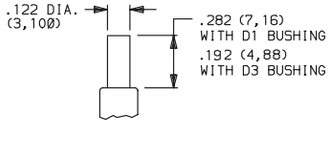

S1 .332" HIGH

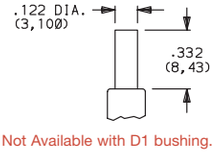

Not Available with D1 bushing.

M .332" HIGH SNAP-FITTING

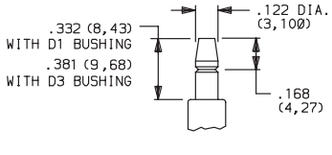

NOTE: Caps available for all plunger options, see page A-27.

BUSHING

D1 UNTHREADED

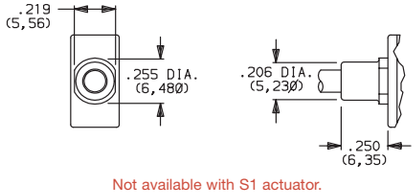

Not available with S1 actuator.

D3 .180" HIGH UNTHREADED

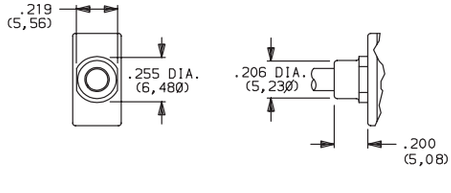

NOTE: Disposable splashproof vinyl over actuator and bushing supplied std., see page A-26.

Third Angle Projection

Dimensions are shown: Inches (mm)
Specifications and dimensions subject to change

TERMINATIONS

C PC THRU-HOLE

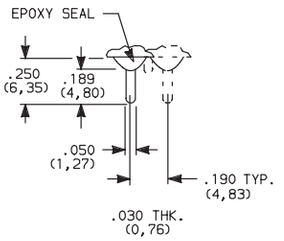

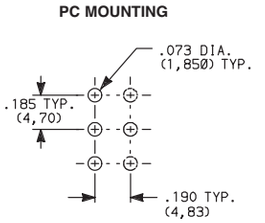

SPDT and DPDT

A RIGHT ANGLE, PC THRU-HOLE

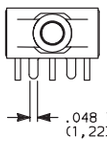

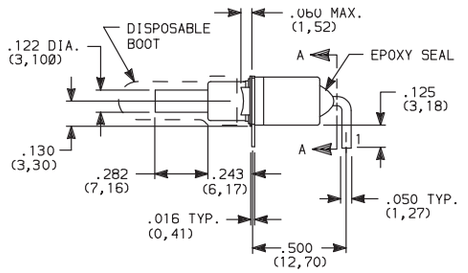

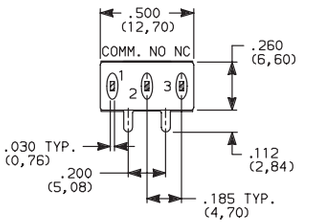

SECTION A-A

E121SD1AGE
SPDT

A3 RIGHT ANGLE, SNAP-IN, PC THRU-HOLE

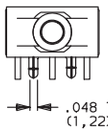

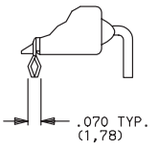

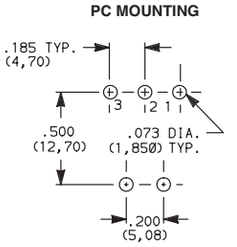

NOTE: Terminal bend radii and lead-in manufacturing option.

A RIGHT ANGLE, PC THRU-HOLE

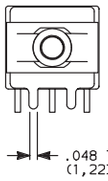

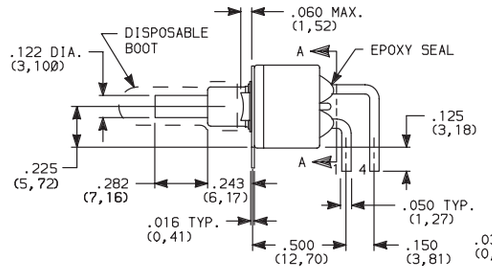

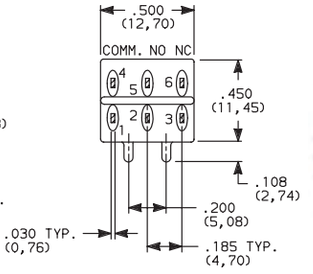

SECTION A-A

E221SD1AGE
DPDT

A3 RIGHT ANGLE, SNAP-IN, PC THRU-HOLE

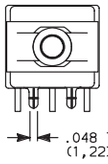

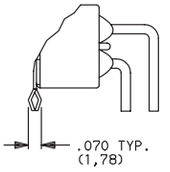

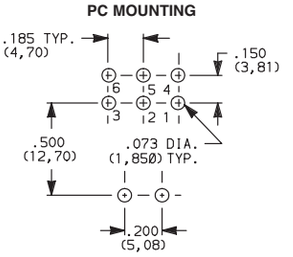

NOTE: Terminal bend radii and lead-in manufacturing option.

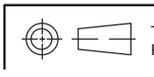

Third Angle Projection

Dimensions are shown: Inches (mm)
Specifications and dimensions subject to change

E020 Series
Sealed Snap-acting Momentary Pushbutton Switches

TERMINATIONS

AV2
VERTICAL RIGHT ANGLE, PC THRU-HOLE,
.150" PITCH

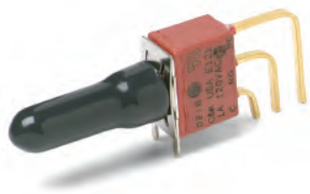

E121SD1AV2GE
SPDT

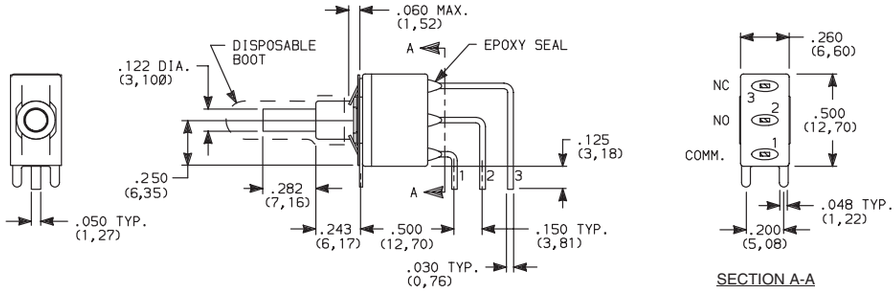

AV3
VERTICAL RIGHT ANGLE, SNAP-IN, PC THRU-HOLE,
.150" PITCH

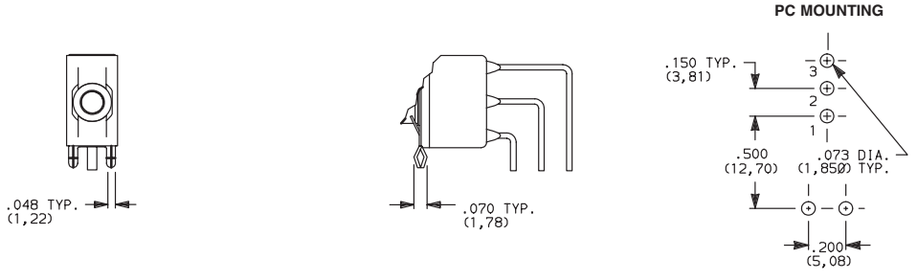

NOTE: Terminal bend radii and lead-in manufacturing option.

AV2
VERTICAL RIGHT ANGLE, PC THRU-HOLE,
.150" PITCH

E221SD1AV2GE
DPDT

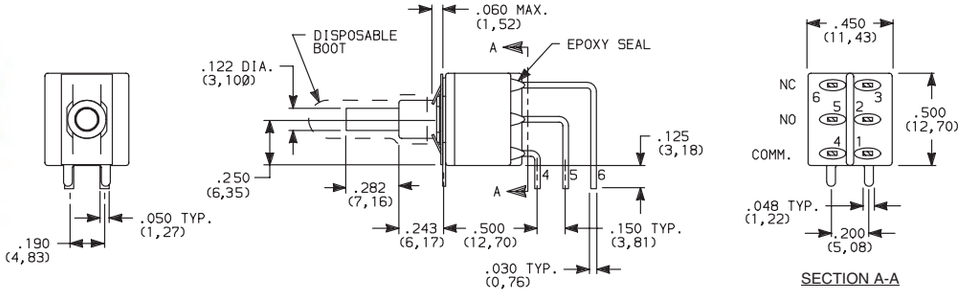

AV3
VERTICAL RIGHT ANGLE, SNAP-IN, PC THRU-HOLE,
.150" PITCH

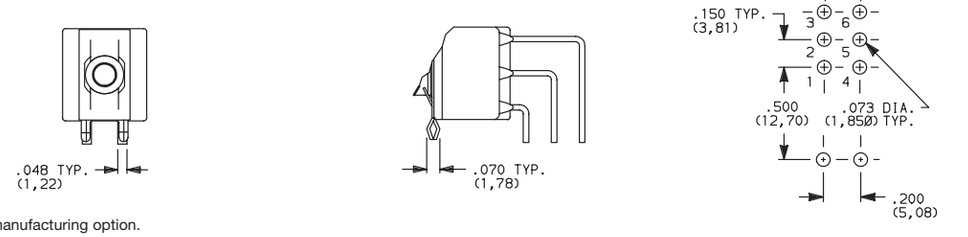

NOTE: Terminal bend radii and lead-in manufacturing option.

Third Angle Projection

Dimensions are shown: Inches (mm)
Specifications and dimensions subject to change

TERMINATIONS

V3, V4 VERTICAL MOUNT, V-BRACKET

V31, V41 VERTICAL MOUNT, V-BRACKET, SNAP-IN

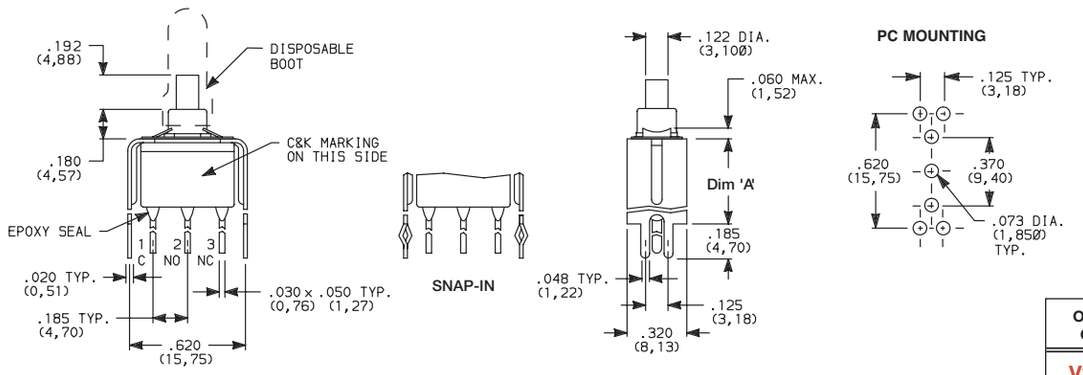

E121SD3__GE
SPDT

OPTION CODE	DIM 'A'
V3, V31	.460 (11,68)
V4, V41	.630 (16,00)

V3, V4 VERTICAL MOUNT, V-BRACKET

V31, V41 VERTICAL MOUNT, V-BRACKET, SNAP-IN

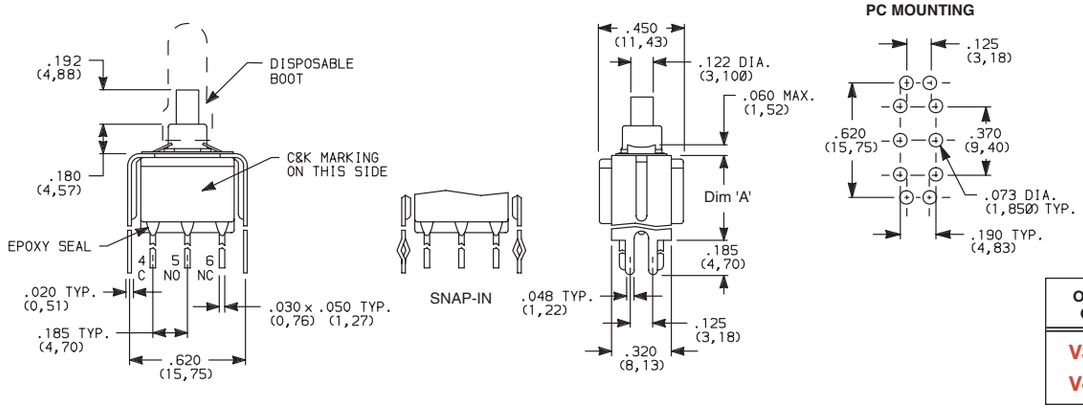

E221SD3__GE
DPDT

OPTION CODE	DIM 'A'
V3, V31	.460 (11,68)
V4, V41	.630 (16,00)

V6, V8 VERTICAL MOUNT, V-BRACKET

V61, V81 VERTICAL MOUNT, V-BRACKET, SNAP-IN

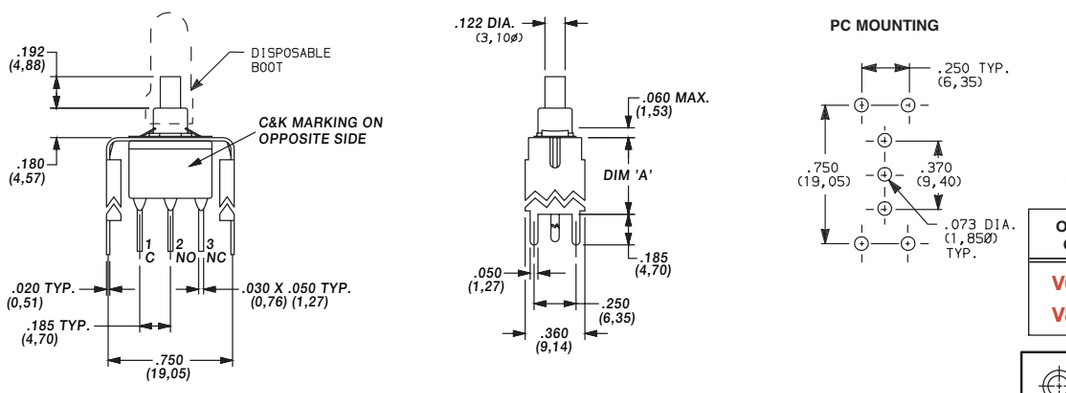

E121SD3__GE
SPDT

OPTION CODE	DIM 'A'
V6, V61	.460 (11,68)
V8, V81	.953 (24,21)

Third Angle Projection

Dimensions are shown: Inches (mm)
Specifications and dimensions subject to change

E020 Series
Sealed Snap-acting Momentary Pushbutton Switches

TERMINATIONS

V6, V8 VERTICAL MOUNT, V-BRACKET

V61, V81 VERTICAL MOUNT, V-BRACKET, SNAP-IN

E221SD3V6GE
DPDT

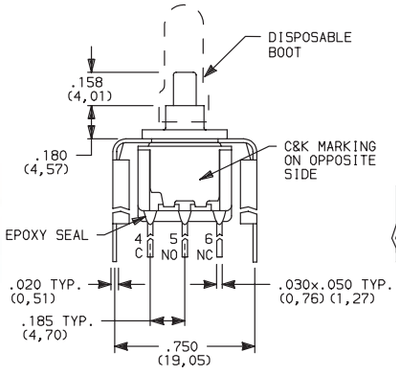

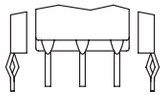

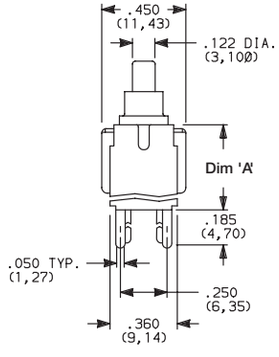

PC MOUNTING

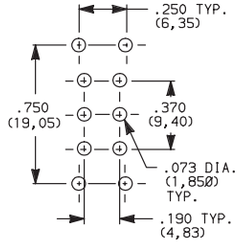

OPTION CODE	DIM 'A'
V6, V61	.460 (11,68)
V8, V81	.953 (24,21)

CONTACT MATERIAL

OPTION CODE	CONTACT MATERIAL	TERMINAL PLATING	RATINGS	
B	GOLD [1]	GOLD [1]	LOW LEVEL/DRY CIRCUIT	EX25 MODELS ONLY: 0.4 VA MAX. @ 20 V AC OR DC MAX.
P		MATTE-TIN [4]		
G	GOLD OVER SILVER [2,3]	GOLD [3]	LOW LEVEL/DRY CIRCUIT OR POWER	EX21 MODELS ONLY: 0.4 VA MAX @ 20 V AC OR DC MAX. OR 1 AMP @ 120 V AC OR 28 V DC.
R		MATTE-TIN [4]		

* Note: See Technical Data section of this catalog for RoHS compliant and compatible definitions and specifications.

[1] CONTACTS & TERMINALS: Copper alloy, with gold plate over nickel plate.
[2] N.O. AND N.C. CONTACTS: Coin silver, with gold plate over nickel plate.
[3] COMMON CONTACTS & ALL TERMINALS: Copper alloy, with gold plate over nickel plate.
[4] TERMINALS: Copper alloy, with matte-tin alloy over nickel plate.

NOTE: Any models supplied with P, R, B or G contact material are RoHS compliant.

E121, E221 models c UL us with all options when ordered with mandatory G, or R contact material.

P or B contact material must be ordered with EX25 models.

R or G contact material must be ordered with EX21 models.

SEAL

E EPOXY SEAL AND DISPOSABLE SPLASHPROOF BOOT

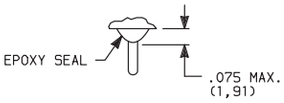

Disposable splashproof boot supplied standard. Remove and discard boot *only after* soldering and cleaning processes are complete.

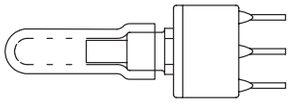

Third Angle Projection

Dimensions are shown: Inches (mm)
Specifications and dimensions subject to change

AVAILABLE HARDWARE

Cap

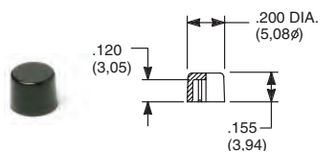

PART NO.

708901000	WHITE
708902000	BLACK
708903000	RED

Material: Nylon
Finish: Gloss

Cap

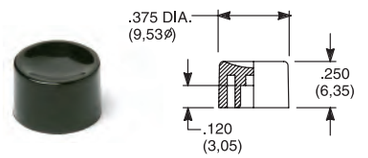

PART NO.

752701000	WHITE
752702000	BLACK
752703000	RED

Material: Nylon
Finish: Gloss

Cap

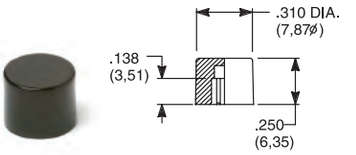

PART NO.

801801000	WHITE
801802000	BLACK
801803000	RED

Material: Nylon
Finish: Gloss

Cap, Snap-fitting plunger

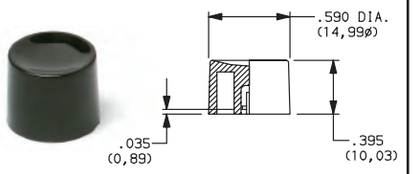

PART NO.

452D01000	WHITE
452D02000	BLACK
452D03000	RED

Material: Nylon
Finish: Gloss

Cap, Snap-fitting plunger

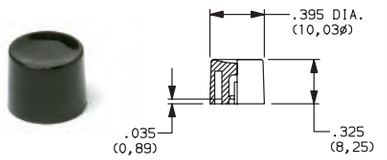

PART NO.

894101000	WHITE
894102000	BLACK
894103000	RED

Material: Nylon
Finish: Gloss

Cap

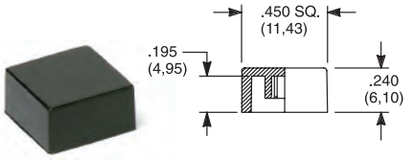

PART NO.

484601000	WHITE
484602000	BLACK
484603000	RED

Material: Nylon
Finish: Gloss

PART NO.

798201000	WHITE
798202263	BLACK
798203000	RED

Material: Nylon
Finish: Matte

NOTE: Other cap colors available, consult Customer Service Center.

Frames snap into panel opening and are independent from switch mounting. Accurate positioning of the PC mounted switch relative to the panel opening is necessary to provide proper clearance between actuator and frame. Available in two basic styles and four panel thicknesses .047-.125 in. Material: Nylon. Finish: Matte.

TYPICAL APPLICATION

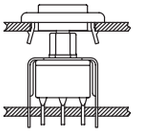

.047" (1,19) PANEL THK.	.062" (1,57) PANEL THK.	.090" (2,29) PANEL THK.	.125" (3,18) PANEL THK.
PART NO.	**PART NO.**	**PART NO.**	**PART NO.**
432502263	432602263	432702263	432802263 BLACK

PANEL MOUNTING

For part numbers
4325xxxxx, 4326xxxxx

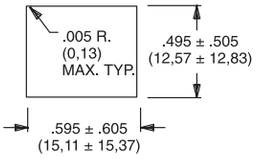

For part numbers
4327xxxxx, 4328xxxxx

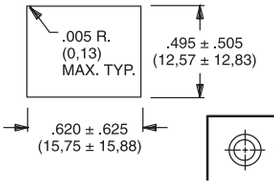

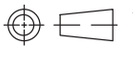

Third Angle Projection

Dimensions are shown: Inches (mm)
Specifications and dimensions subject to change

E020 Series
Sealed Snap-acting Momentary Pushbutton Switches

AVAILABLE HARDWARE

PANEL INSERTS

Above frames (part nos. 432XXXXXX) are also available with insert which accepts LED for indicator light assembly. Order insert separately from frame. Blank insert panel (without hole for LED) also available. **LED not included.**

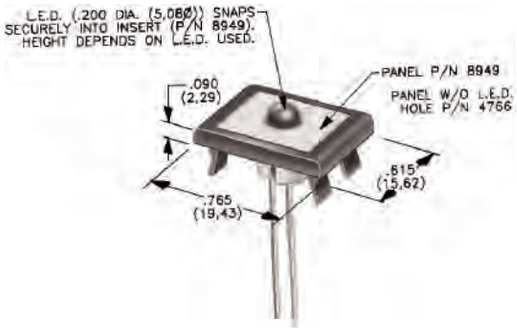

PANEL INSERT WITH HOLE FOR LED	BLANK PANEL INSERT WITHOUT HOLE FOR LED	
PART NO.	**PART NO.**	
894902000	476602000	BLACK

Special colors, custom markings available, consult Customer Service Center.

Third Angle Projection

Dimensions are shown: Inches (mm)
Specifications and dimensions subject to change

8020 Series
Snap-acting Momentary Pushbutton Switches

Features/Benefits

- ***Positive tactile feel***
- ***Multi-positions available***
- ***Wide variety of termination options***
- ***Epoxy terminal seal compatible with bottom wash cleaning***
- ***RoHS compliant models available***

Models Available

Typical Applications

- ***Instrumentation***
- ***Computer peripherals***
- ***Telecommunications equipment***

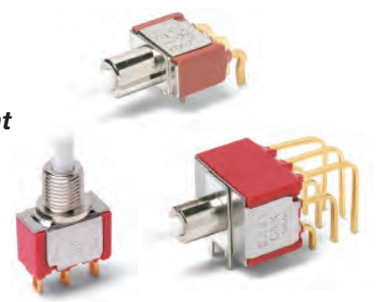

Specifications

CONTACT RATING: B contact material (8X25 Models): 0.4 VA max. @ 20 V AC or DC maximum. G contact material (8X21, U8X1 Models): 1 AMP @ 120 V AC or 28 V DC or 0.4 VA max. @ 20 V AC or DC max. Note: Break-before-makecontacts. Multi-pole contacts do not make and break simultaneously. See page A-43 for additional ratings.

ELECTRICAL LIFE: 60,000 make-and-break cycles at full load.

CONTACT RESISTANCE: Below 50 mΩ typ. initial @ 2-4 V DC, 100 mA, for both silver and gold plated contacts.

INSULATION RESISTANCE: 10^9Ω min.

DIELECTRIC STRENGTH: 1,000 Vrms min. @ sea level.

OPERATING TEMPERATURE: 8X2X MODELS: –30°C to 75°C. U8X1 MODELS: –30°C to 65°C.

CAP INSTALLATION FORCE: 10 lbs. max. permissible.

SOLDERABILITY: Per MIL-STD-202F method 208D, or EIA RS-186E method 9 (1 hour steam aging).

NOTE: Any models supplied with B, P, R, or G contact material are RoHS compliant.

NOTE: Specifications and materials listed above are for switches with standard options. For information on specific and custom switches, consult Customer Service Center.

Materials

CASE: Glass filled nylon 6/6 or diallyl phthalate (DAP), flame retardant (UL 94V-0).

PLUNGER: Glass filled nylon or glass filled polyester (PBT) (UL 94V-0).

CAP & FRAME: Nylon, black, standard.

BUSHING: Brass or zinc, nickel plated.

HOUSING: Stainless steel.

SWITCH SUPPORT: Brass or steel, matte-tin plated.

N.O. & N.C. CONTACTS: 8X21, U8X1 MODELS: G contact material: Coin silver, with gold plate over nickel plate. See page A-43 for additional contact materials.
8X25 MODELS: B contact material: Copper alloy, with gold plate over nickel plate. See page A-43 for additional contact materials.

COMMON CONTACT & ALL TERMINALS: Copper alloy, with gold plate over nickel plate.

TERMINAL SEAL: Epoxy. Refer to soldering and cleaning Technical Data Chapter.

HARDWARE: Nut & Locking Ring: Brass, nickel plated; Lockwasher: Steel, nickel plated.

Build-A-Switch

To order, simply select desired option from each category and place in the appropriate box. Available options are shown and described on pages A-30 thru A-45. For additional options not shown in catalog, consult Customer Service Center. All models have epoxy terminal seal and are compatible with all "bottom-wash" PCB cleaning methods.

Switch Function
- **8121** SPDT On-Mom. 1 Amp
- **8125** SPDT On-Mom. 0.4VA
- **8221** DPDT On-Mom. 1 Amp
- **8225** DPDT On-Mom. 0.4VA
- **8321** 3PDT On-Mom. 1 Amp
- **8325** 3PDT On-Mom. 0.4VA
- **8421** 4PDT On-Mom. 1 Amp
- **8425** 4PDT On-Mom. 0.4VA

Note: UL models available, see page A-30 and A-31.

Actuator or Plunger
- **S** Plunger
- **NONE** Snap-in
- **J80** Snap-in
- **J81** Snap-in w/frame
- **J82** Snap-in w/frame for LED
- **J83** Snap-in w/frame & flush cap
- **J84** Snap-in w/frame for LED, flush cap
- **J85** Snap-in w/frame & LED
- **J95** PC w/V-bracket & LED
- **L** Plunger
- **M** Snap-fitting plunger

Bushing
- **D9** .280" high, keyway
- **H** .250" high, flat
- **NONE** No bushing choice required
- **D** .280" high, keyway
- **D2** .288" high, flat
- **D3** .180" high
- **D8** .288" high, flat
- **H9** .250" high, flat, hi torque
- **Y** .350" high, keyway
- **Y3** 6.35mm high, keyway, hi torque
- **Y4** .378" high, flat, hi torque
- **Y9** .350" high, keyway

Contact Material
- **B** Gold
- **P** Gold, matte-tin
- **G** Gold over silver
- **R** Gold over silver, matte-tin

Seal
- **E** Epoxy
- **I** Epoxy potted base

Cap Color
- **2** Black
- **NONE** Models without caps
- **1** White
- **3** Red
- **4** Orange
- **5** Yellow
- **6** Green
- **7** Blue
- **9** Gray

Frame Color
- **2** Black
- **NONE** Models without frame
- **1** White
- **3** Red
- **5** Yellow
- **6** Green
- **9** Gray

LED Color
- **3** Red
- **NONE** Models without LED
- **5** Yellow
- **6** Green

Terminations
- **A** Right angle, PC thru-hole
- **AV2** Vertical right angle, PC thru-hole
- **C** PC Thru-hole
- **Z** Solder lug
- **A2** Right angle, PC thru-hole
- **A3** Right angle, snap-in, PC thru-hole
- **A4** Right angle, PC thru-hole, reversed terminals
- **A6** Right angle, PC thru-hole
- **AV1** Vertical right angle, PC thru-hole
- **AV3** Vertical right angle, snap-in, PC thru-hole
- **R** Right angle with PCB
- **R2** Right angle with PCB, reversed terminals
- **V2** .555" high, V-bracket
- **V3** .460" high, V-bracket
- **V4** .630" high, V-bracket
- **V6** .460" high, V-bracket
- **V7** .630" high, V-bracket
- **V8** .953" high, V-bracket
- **V9** 1.150" high, V-bracket
- **V31** .460" high, snap-in V-bracket
- **V61** .460" high, snap-in V-bracket
- **W** .750" long, wire wrap
- **W1** .964" long, wire wrap
- **W3** .425" long, wire wrap
- **W4** 1.062" long, wire wrap
- **Z3** Quick connect

Dimensions are shown: Inches (mm)
Specifications and dimensions subject to change

8020 Series
Snap-acting Momentary Pushbutton Switches

SWITCH FUNCTION

NO. POLES	MODEL NO.	UL/CSA* MODEL NO.	SWITCH FUNCTION POS. 1 (C&K marking on opposite side)	SWITCH FUNCTION POS. 2	CONNECTED TERMINALS POS. 1 (C&K marking on opposite side)	CONNECTED TERMINALS POS. 2	SCHEMATIC
SP	8121	U811	ON	MOM.	1-3	1-2	SPDT
	8125		ON	MOM.			

SPDT

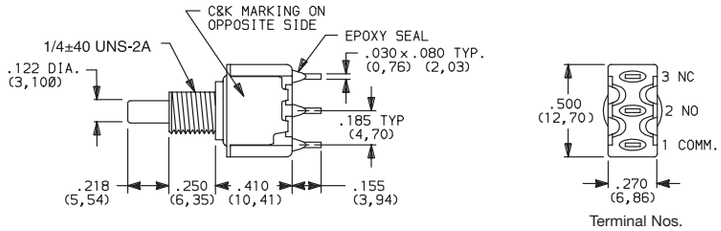

Part number shown: 8121SHZGE

Terminal Nos. For Reference Only

DP	8221	U821	ON	MOM.	1-3,4-6	1-2,4-5	DPDT
	8225		ON	MOM.			

DPDT

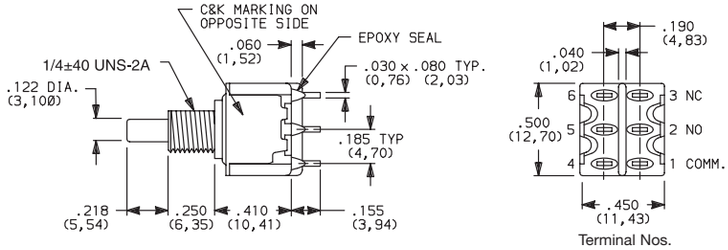

Part number shown: 8221SHZGE

Terminal Nos. For Reference Only

3P	8321	U831	ON	MOM.	1-3,4-6,7-9	1-2,4-5,7-8	3PDT
	8325		ON	MOM.			

3PDT

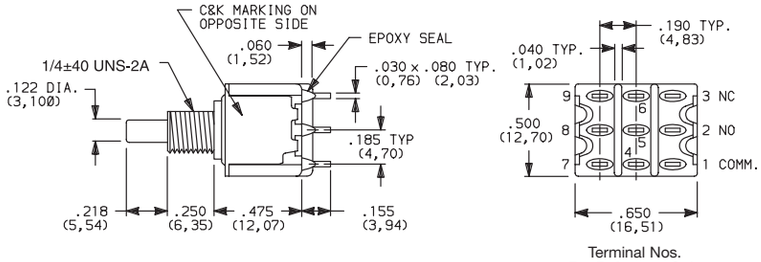

Part number shown: 8321SHZGE

Terminal Nos. For Reference Only

MOM. = Momentary

*U811 thru U841 model numbers c UL us with all options (except R, R2 terminations) when ordered with G or R contact material.

8X25 models must be ordered with B or P contact material.

8X21 and U8X1 models must be ordered with G or R contact material.

Third Angle Projection

Dimensions are shown: Inches (mm)
Specifications and dimensions subject to change

8020 Series
Snap-acting Momentary Pushbutton Switches

SWITCH FUNCTION

NO. POLES	MODEL NO.	UL/CSA* MODEL NO.	SWITCH FUNCTION POS. 1	SWITCH FUNCTION POS. 2	CONNECTED TERMINALS POS. 1	CONNECTED TERMINALS POS. 2	SCHEMATIC
			C&K marking on opposite side		C&K marking on opposite side		
4P	8421	U841	ON	MOM.	1-3,4-6,7-9,10-12	1-2,4-5,7-8,10-11	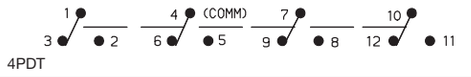
	8425		ON	MOM.			

4PDT

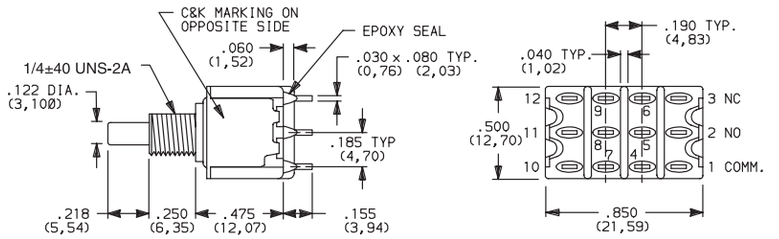

Part number shown: 8421SHZGE

Terminal Nos.
For Reference Only

MOM. = Momentary

* U811 thru U841 model numbers c UL us with all options (except R, R2 terminations) when ordered with G or R contact material.

8X25 models must be ordered with B or P contact material.

8X21 and U8X1 models must be ordered with G or R contact material.

ACTUATOR—SNAP-IN FRONT MOUNT

CAP COLOR
ACTUATOR OR PLUNGER
FRAME COLOR

OPTION CODE	CAP AND FRAME COLOR
2	BLACK
NONE	No Frame Color (J80 option)
1	WHITE
3	RED
4	ORANGE
5	YELLOW
6	GREEN
7	BLUE
9	GRAY

Other colors available, consult Customer Service Center. Cap and Frame Finish: matte.

NOTE: Caps and frames available separately, see pages A-44 and A-45.

J80 SNAP-IN

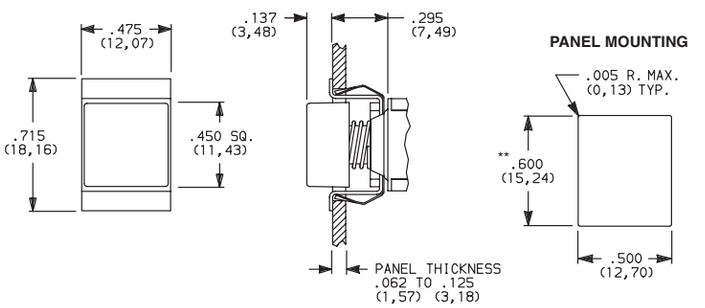

NOTE: No frame color choice required.

** Increase this dim. to .620/.625 (15,75/15,88) for .091/.125 (2,31/3,18) thk. panels.

J81 SNAP-IN WITH FRAME

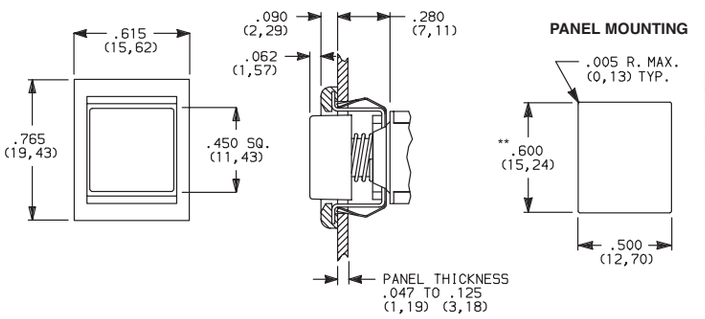

NOTE: Available with C, W-W4, Z or Z3 terminations and SPDT and DPDT models only.

** Increase this dim. to .620/.625 (15,75/15,88) for .091/.125 (2,31/3,18) thk. panels.

Third Angle Projection

Dimensions are shown: Inches (mm)
Specifications and dimensions subject to change

8020 Series
Snap-acting Momentary Pushbutton Switches

ACTUATOR—SNAP-IN FRONT MOUNT

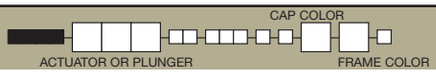

J83 SNAP-IN WITH FRAME AND FLUSH CAP

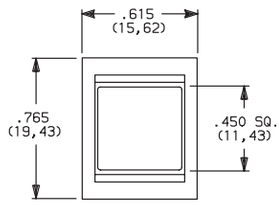

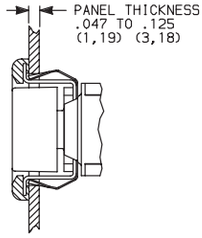

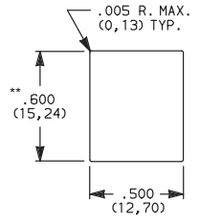

J82 SNAP-IN WITH FRAME FOR LED

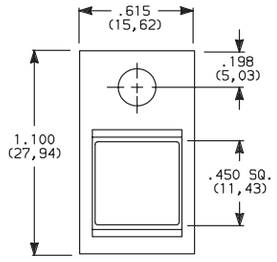

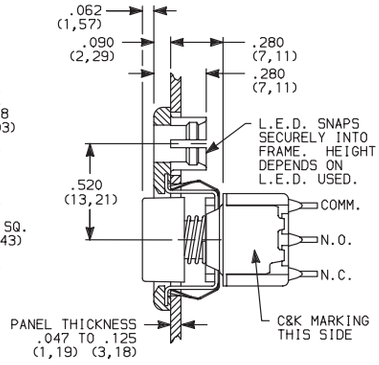

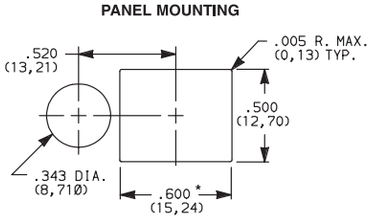

* Increase this dim. to .620/.625 (15,75/15,88) for .091/.125 (2,31/3,18) thk. panels.

LED not included.
For LED information, see page A-45.

J84 SNAP-IN WITH FRAME FOR LED, FLUSH CAP

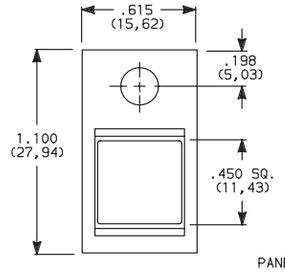

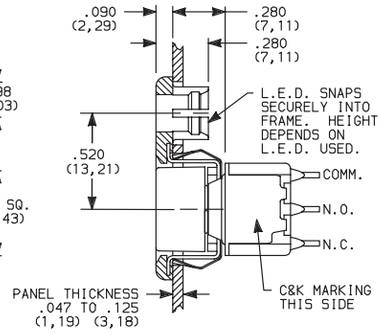

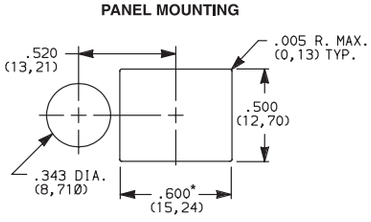

* Increase this dim. to .620/.625 (15,75/15,88) for .091/.125 (2,31/3,18) thk. panels.

LED not included.
For LED information, see page A-45.

OPTION CODE	CAP AND FRAME COLOR
2	BLACK
1	WHITE
3	RED
4	ORANGE
5	YELLOW
6	GREEN
7	BLUE
9	GRAY

Other colors available, consult Customer Service Center.
Cap and Frame Finish: matte.

Available with C, W-W4, Z or Z3 terminations and SPDT and DPDT models only.

NOTE: Caps and frames available separately, see pages A-44 and A-45.

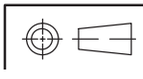
Third Angle Projection

Dimensions are shown: Inches (mm)
Specifications and dimensions subject to change

ACTUATOR—SNAP-IN FRONT MOUNT

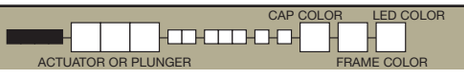

J85 SNAP-IN WITH FRAME AND LED

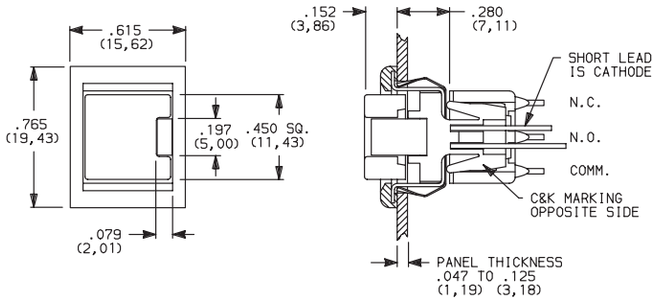

PANEL MOUNTING

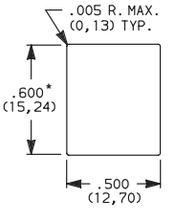

* Increase this dim. to .620/.625 (15,75/15,88) for .091/.125 (2,31/3,18) thk. panels.

8121J85ZGE223
SPST

Available with C, W-W4, Z or Z3 terminations and SPDT models only. For LED information see page A-45.

NOTE: Caps & frames available separately, see pages A-44 and A-45.

OPTION CODE	CAP AND FRAME COLOR
2	BLACK
1	WHITE
3	RED
4	ORANGE
5	YELLOW
6	GREEN
7	BLUE
9	GRAY

OPTION CODE	LED COLOR
3	RED
5	YELLOW
6	GREEN

For LED information see page A-45.

ACTUATOR—PC MOUNT

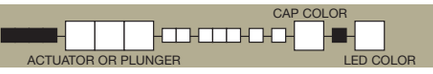

J95 PC WITH V-BRACKET AND LED

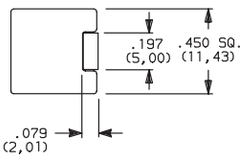

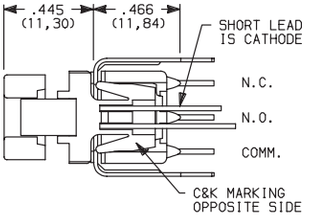

PC MOUNTING

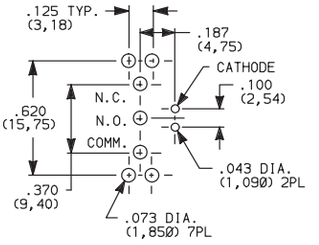

8121J95V3GE23
SPST

OPTION CODE	CAP AND FRAME COLOR
2	BLACK
1	WHITE
3	RED
4	ORANGE
5	YELLOW
6	GREEN
7	BLUE
9	GRAY

OPTION CODE	LED COLOR
3	RED
5	YELLOW
6	GREEN

For LED information see page A-45.

NOTE: Caps available separately, see page A-44.
Available with V3 terminations and SPDT models only.

Third Angle Projection

Dimensions are shown: Inches (mm)
Specifications and dimensions subject to change

8020 Series
Snap-acting Momentary Pushbutton Switches

PLUNGER

ACTUATOR OR PLUNGER

S PLUNGER

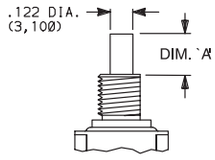

AVAILABLE BUSHINGS	DIM. 'A' FOR C, W-W4, Z & Z3 TERMINATIONS	DIM. 'A' FOR A, A2, A3, A4, A6, AV-A3, R & R2 TERMINATIONS	DIM. 'A' FOR V3-V61 TERMINATIONS
D, D9	.244 (6,20)	.228 (5,79)	.224 (5,69)
H, H9	.218 (5,54)	.202 (5,13)	.198 (5,03)
Y, Y9	.203 (5,16)	.187 (4,75)	.183 (4,65)
Y3	(5,54)	(5,13)	(5,03)
Y4	.185 (4,70)	.169 (4,29)	.165 (4,19)
D2, D8	N/A	.232 (5,89)	.228 (5,79)
D3	N/A	.162 (4,11)	.158 (4,01)

NONE NO PLUNGER CHOICE REQUIRED (JXX ACTUATORS)

L PLUNGER

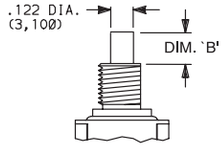

AVAILABLE BUSHINGS	DIM. 'B' FOR C, W-W4, Z & Z3 TERMINATIONS	DIM. 'B' FOR A, A2, A3, A4, A6, AV-A3, R & R2 TERMINATIONS	DIM. 'B' FOR V3-V61 TERMINATIONS
Y, Y9	.178 (4,52)	.162 (4,11)	.158 (4,01)
Y4	.090 (2,29)	.074 (1,88)	.070 (1,78)

M SNAP-FITTING PLUNGER

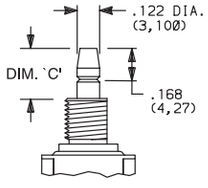

AVAILABLE BUSHINGS	DIM. 'C' FOR C, W-W4, Z & Z3 TERMINATIONS	DIM. 'C' FOR A, A2, A3, A4, A6, AV-A3, R & R2 TERMINATIONS	DIM. 'C' FOR V3-V61 TERMINATIONS
D, D9	.297 (7,54)	.281 (7,14)	.277 (7,04)
H, H9	.267 (6,78)	.251 (6,38)	.247 (6,27)
Y, Y9	.259 (6,58)	.243 (6,17)	.239 (6,07)
Y3	(6,78)	(6,37)	(6,27)
Y4	.259 (6,58)	.243 (6,17)	.239 (6,07)
D2, D8	N/A	.273 (6,93)	.269 (6,83)
D3	N/A	.361 (9,17)	.357 (9,07)

N/A = NOT AVAILABLE

NOTE: When selecting plunger option, bushing selection must also be made, see next page. No plunger option is required when any JXX actuator option is selected. Additional plunger lengths are available on SPDT and DPDT models, consult Customer Service Center. Not all plunger lengths sufficient for use with caps, see page A-44.

BUSHING

NONE NO BUSHING CHOICE REQUIRED (JXX ACTUATORS)

D .280" HIGH THREADED, KEYWAY

D9 .280" HIGH UNTHREADED, KEYWAY

H .250" HIGH THREADED, FLAT

H9 .250" HIGH UNTHREADED, FLAT

Y .350" HIGH THREADED, KEYWAY

Y9 .350" HIGH UNTHREADED, KEYWAY

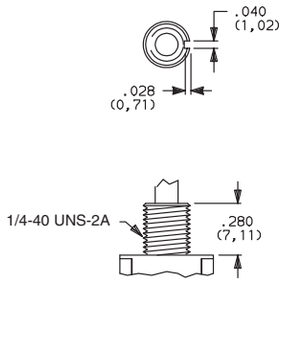

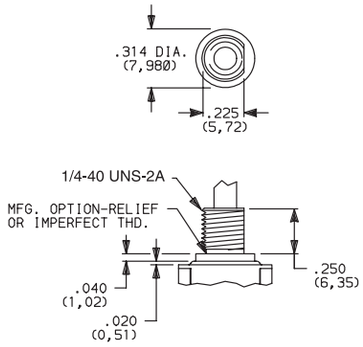

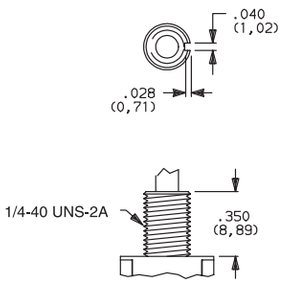

D9 bushing standard with A-A6, R, R2 AV-AV3 terminations.

H bushing standard with C, W-W4, Z or Z3 terminations. H, H9 bushings not available on single pole models with A3-A6, R, R2 terminations.

Will withstand 12 in./lbs. of torque with no distortion.

Third Angle Projection

Dimensions are shown: Inches (mm)
Specifications and dimensions subject to change

BUSHING

Y3 6.35mm THREADED, KEYWAY

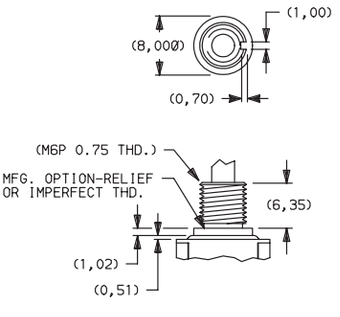

Y4 .378" HIGH THREADED, FLAT

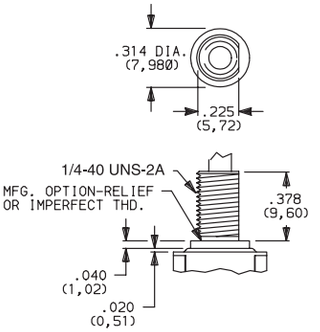

Y3 & Y4 bushings not available on single pole models with A3-A6, R, R2 terminations. Will withstand 12 in./lbs. of torque with no distortion.

D2 .288" HIGH THREADED, FLAT
D8 .288" HIGH UNTHREADED, FLAT

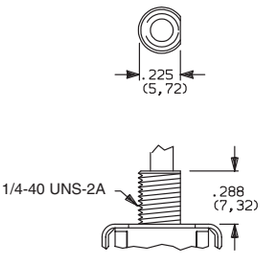

D2, D8 bushings not available with C, W-W4, Z, Z3 terminations.

D3 .180" HIGH UNTHREADED

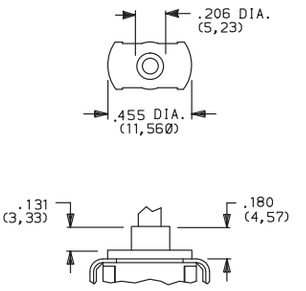

D3 bushing available with A, A2, A3, AV, AV2, AV3 and V2-V61 terminations only.

NOTE: No bushing option choice required when JXX actuator option is selected. When selecting bushing option, plunger selection must also be made, see previous page. Plunger lengths vary with bushing and termination options selected.

PANEL MOUNTING

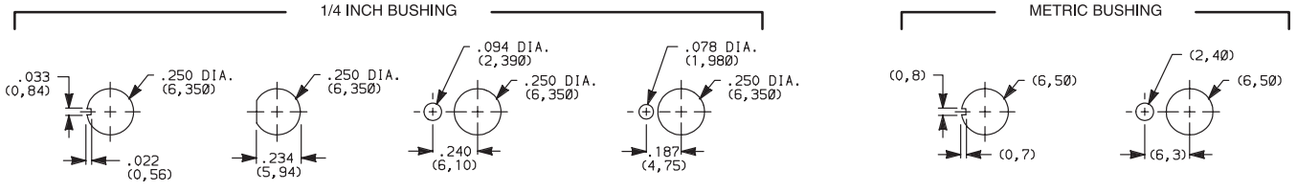

Without locking ring | With standard locking ring | With small locking ring | Without locking ring | With locking ring

NOTE: Two mounting nuts, locking ring and lockwasher supplied standard with threaded bushings.
Optional mounting nut and locking ring styles available, see section "Technical Data and Additional Hardware".

TERMINATIONS

Z SOLDER LUG

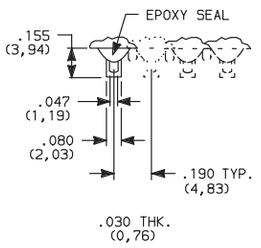

SPDT thru 4PDT

Not available with J95 actuator, P or R contact material.

C PC THRU-HOLE

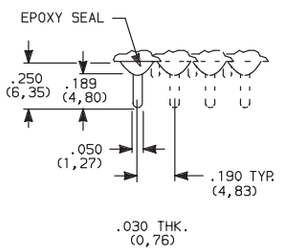

PC MOUNTING

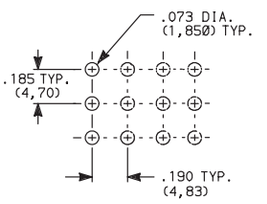

SPDT thru 4PDT

Not available with J95 actuator option.

Z3 QUICK CONNECT

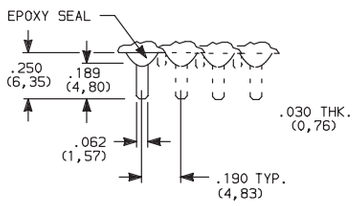

SPDT thru 4PDT

Not available with J95 actuator, P or R contact material. Mating quick connector available, order part number 530100000, page A-44.

W W1, W3, W4 WIRE WRAP

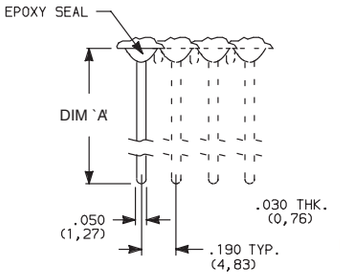

OPTION CODE	DIM 'A'
W	.750 (19,05)
W1	.964 (24,49)
W3	.425 (10,80)
W4	1.062 (26,97)

Not available with J95 actuator option.

SPDT thru 4PDT

Third Angle Projection

Dimensions are shown: Inches (mm)
Specifications and dimensions subject to change

8020 Series
Snap-acting Momentary Pushbutton Switches

TERMINATIONS

A RIGHT ANGLE, PC THRU-HOLE

8121SD9AGE
SPDT

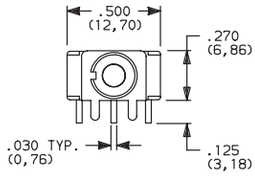

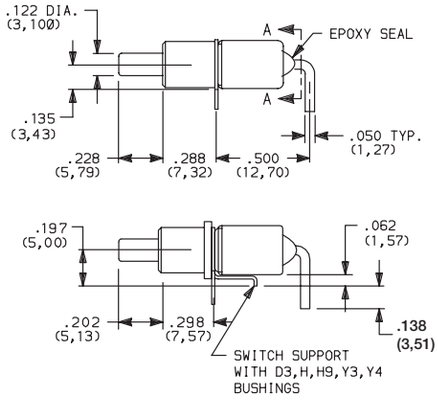

Part Number 8121SH9AGE

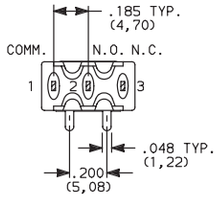

SECTION A-A

Terminal Nos.
For Reference Only.

A3 RIGHT ANGLE, SNAP-IN, PC THRU-HOLE

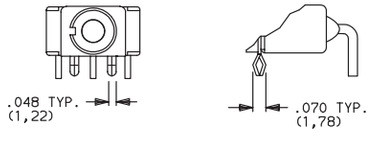

PC MOUNTING

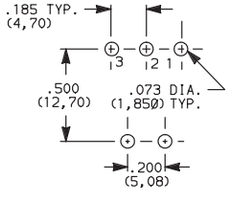

Not available with JXX actuators and I seal.
Terminal bend radii and lead-in manufacturing option.

A RIGHT ANGLE, PC THRU-HOLE

8221SD9AGE
DPDT

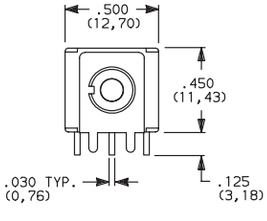

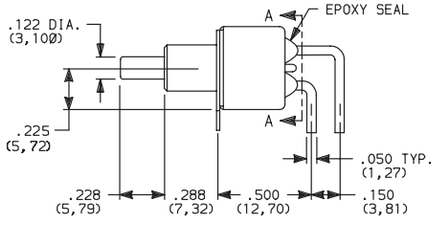

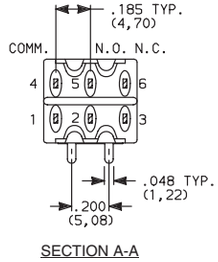

SECTION A-A

A3 RIGHT ANGLE, SNAP-IN, PC THRU-HOLE

PC MOUNTING

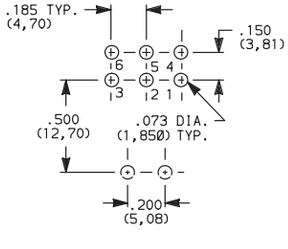

Not available with JXX actuators and I seal option.
Terminal bend radii and lead-in manufacturing option.

Third Angle Projection

Dimensions are shown: Inches (mm)
Specifications and dimensions subject to change

TERMINATIONS

A RIGHT ANGLE, PC THRU-HOLE

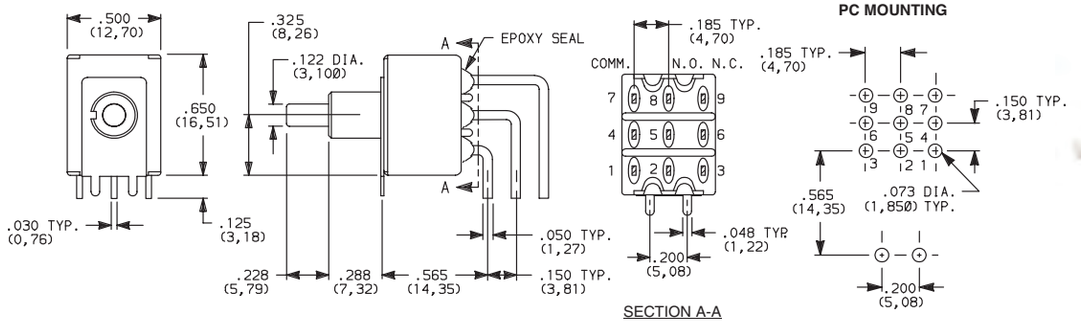

8321SD9AGE
3PDT

Not available with JXX actuators and I seal option.
Terminal bend radii and lead-in manufacturing option.

A2 RIGHT ANGLE, PC THRU-HOLE

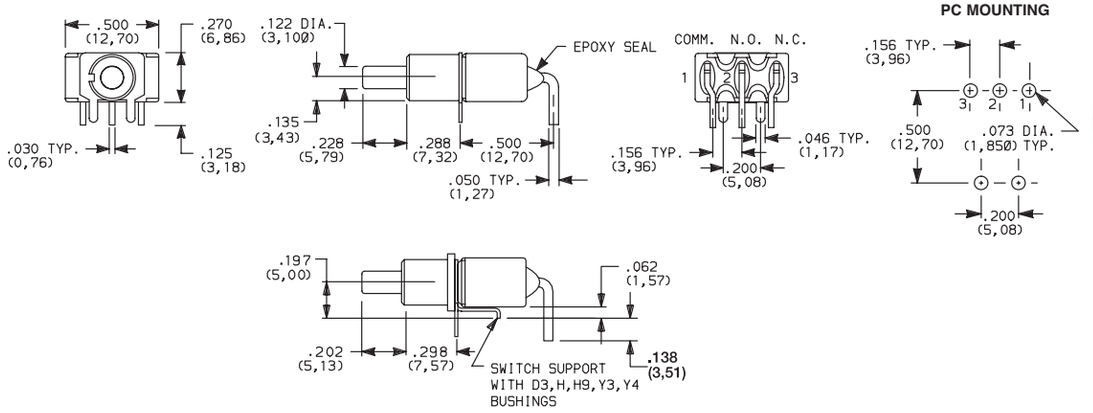

Part Number 8121SH9A2GE

8121SD9A2GE
SPDT

Not available with JXX actuators, I seal option.
Terminal bend radii and lead-in manufacturing option.

A4 RIGHT ANGLE, PC THRU-HOLE, REVERSED TERMINALS

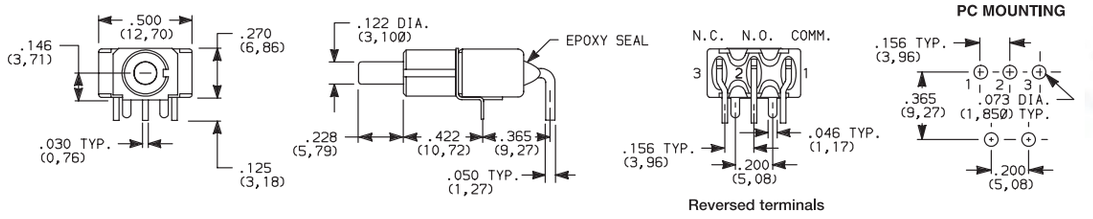

8121SD9A4GE
SPDT

Not available with JXX actuators, D3, H, H9, Y3, Y4 bushings and I seal.
Terminal bend radii and lead-in manufacturing option.

The A4 and R2 termination options are functionally identical and fit the same PC mounting pattern. The switches, however, are shifted relative to the mounting holes. The PC pattern must clear the switch support legs. Unlike the R2, the A4 option is available with UL/CSA.

Third Angle Projection

Dimensions are shown: Inches (mm)
Specifications and dimensions subject to change

8020 Series
Snap-acting Momentary Pushbutton Switches

TERMINATIONS

A6 RIGHT ANGLE, PC THRU-HOLE

8121SD9A6GE
SPDT

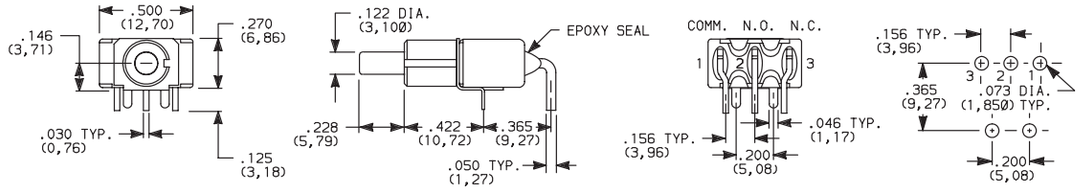

The A6 and R termination options are functionally identical and fit the same PC mounting pattern, The switches, however, are shifted relative to the mounting holes. The PC pattern must clear the switch support legs. Unlike the R, the A6 option is available with UL/CSA.

Not available with JXX actuators, D3, H, H9, Y3, Y4 bushings and I seal.
Terminal bend radii and lead-in manufacturing option.

R RIGHT ANGLE WITH PCB

8121SD9RGE
SPDT

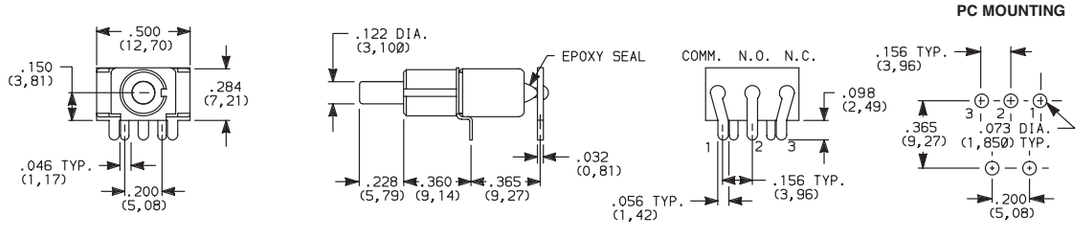

Not available with JXX actuators, D3, H, H9, Y3, Y4 bushings, I seal option.
R termination not UL/CSA approved.

R2 RIGHT ANGLE WITH PCB, REVERSED TERMINALS

8121SD9R2GE
SPDT

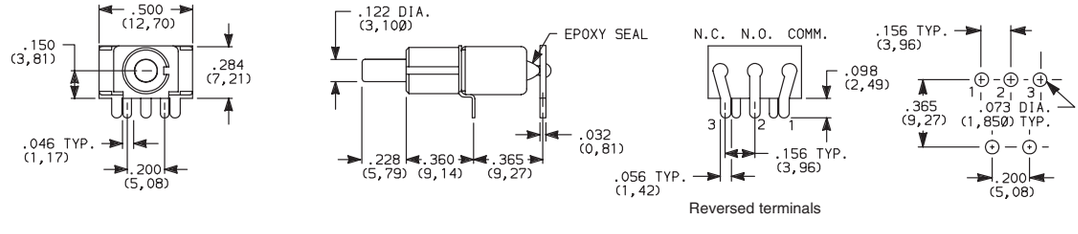

Not available with JXX actuators, D3, H, H9, Y3, Y4 bushings, I seal option.
R2 termination not UL/CSA approved.

Third Angle Projection

Dimensions are shown: Inches (mm)
Specifications and dimensions subject to change

TERMINATIONS

AV2 VERTICAL RIGHT ANGLE, PC THRU-HOLE, .150" PITCH

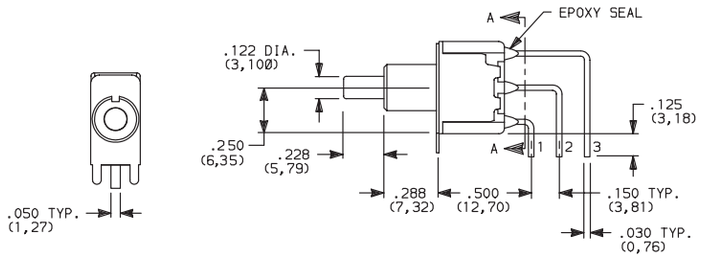

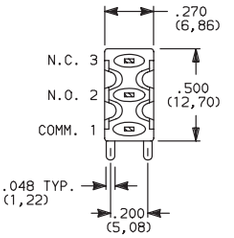

SECTION A-A

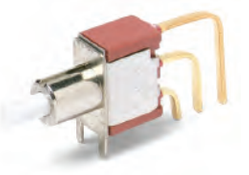

8121SD9AV2GE
SPDT

AV3 VERTICAL RIGHT ANGLE, SNAP-IN,, PC THRU-HOLE, .150" PITCH

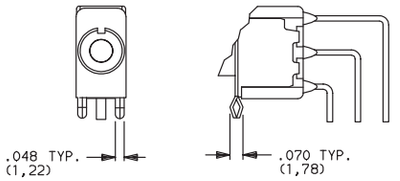

AV1 VERTICAL RIGHT ANGLE, EXTENDED, PC THRU-HOLE, .150" PITCH

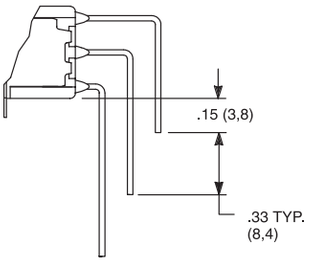

PC MOUNTING

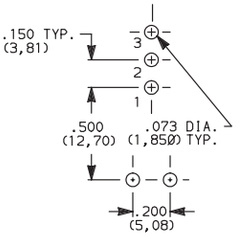

Not available with JXX actuators and I seal.
Terminal bend radii and lead-in manufacturing option.

AV2 VERTICAL RIGHT ANGLE, PC THRU-HOLE, .150" PITCH

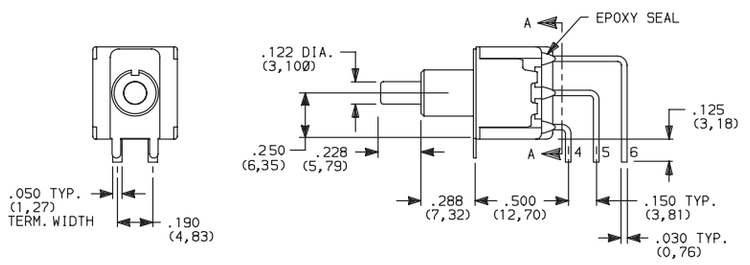

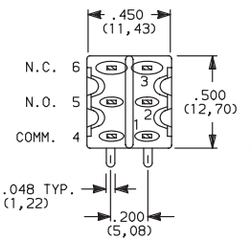

SECTION A-A

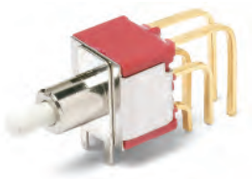

8221SD9AV2GE
DPDT

AV3 VERTICAL RIGHT ANGLE, SNAP-IN, PC THRU-HOLE, .150" PITCH

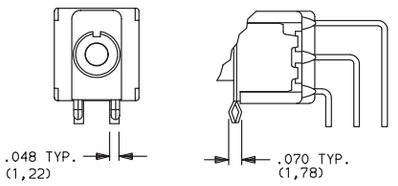

AV1 VERTICAL RIGHT ANGLE, EXTENDED, PC THRU-HOLE, .150" PITCH

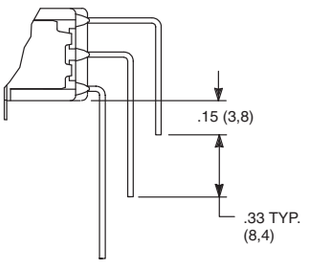

PC MOUNTING

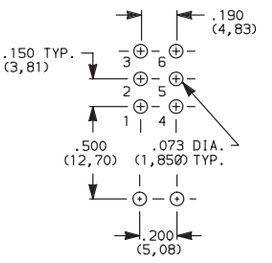

Not available with JXX actuators and I seal.
Terminal bend radii and lead-in manufacturing option.

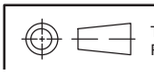

Third Angle Projection

Dimensions are shown: Inches (mm)
Specifications and dimensions subject to change

8020 Series
Snap-acting Momentary Pushbutton Switches

TERMINATIONS

AV2 VERTICAL RIGHT ANGLE, PC THRU-HOLE, 150" PITCH

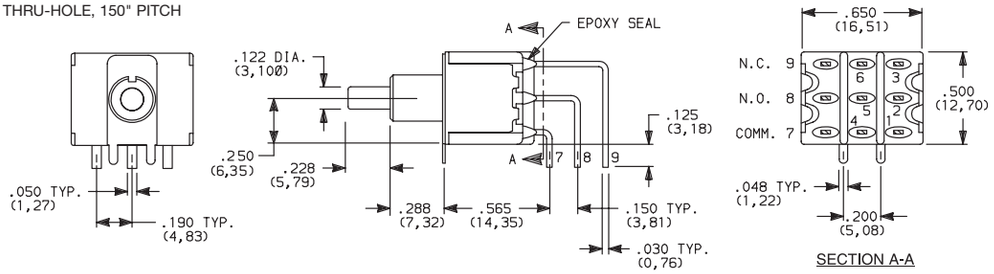

8321SD9AV2GE
3PDT

AV1 VERTICAL RIGHT ANGLE, EXTENDED, PC THRU-HOLE, .150" PITCH

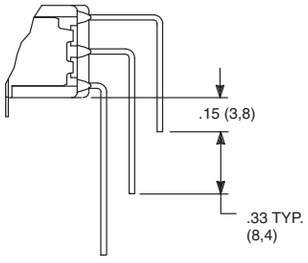

AV3 VERTICAL RIGHT ANGLE, SNAP-IN, PC THRU-HOLE, .150" PITCH

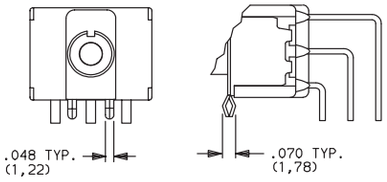

Not available with JXX actuators and I seal.
Terminal bend radii and lead-in manufacturing option.

PC MOUNTING

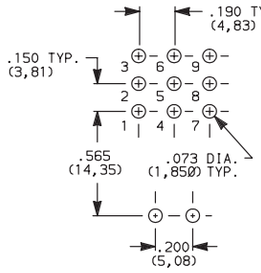

AV2 VERTICAL RIGHT ANGLE, PC THRU-HOLE, 150" PITCH

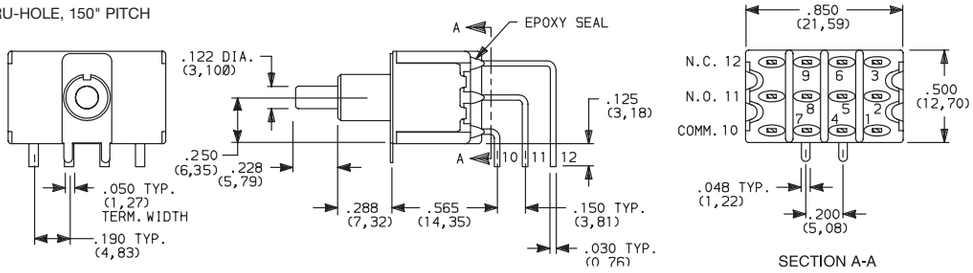

8421SD9AV2GE
4PDT

AV1 VERTICAL RIGHT ANGLE, EXTENDED, PC THRU-HOLE, .150" PITCH

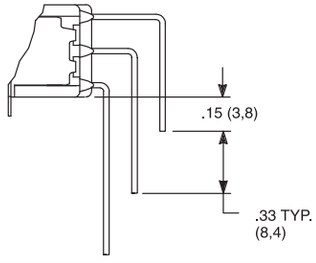

AV3 VERTICAL RIGHT ANGLE, SNAP-IN, PC THRU-HOLE, .150" PITCH

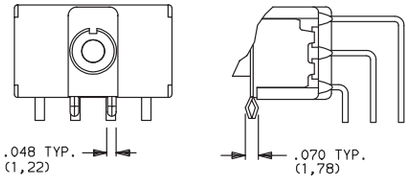

Not available with JXX actuators and I seal.
Terminal bend radii and lead-in manufacturing option.

PC MOUNTING

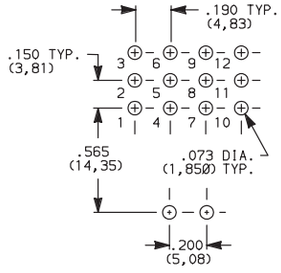

V2, V6, V7, V8 VERTICAL MOUNT, V-BRACKET

V61 VERTICAL MOUNT, V-BRACKET, SNAP-IN

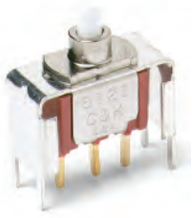

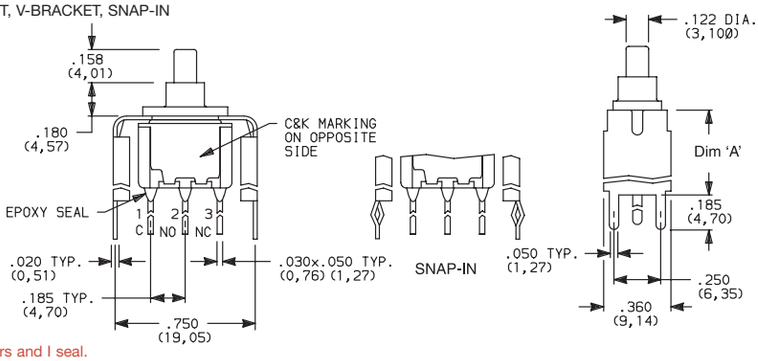

8121SD3__GE
SPDT

Not available with JXX actuators and I seal.

PC MOUNTING

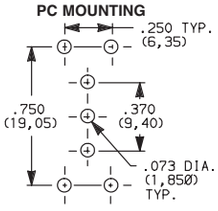

OPTION CODE	DIM 'A'
V2	.555 (14,10)
V6, V61	.460 (11,68)
V7	.630 (16,00)
V8	.953 (24,21)

Third Angle Projection

Dimensions are shown: Inches (mm)
Specifications and dimensions subject to change

TERMINATIONS

V2, V6, V7, V8 VERTICAL MOUNT, V-BRACKET
V61 VERTICAL MOUNT, V-BRACKET, SNAP-IN

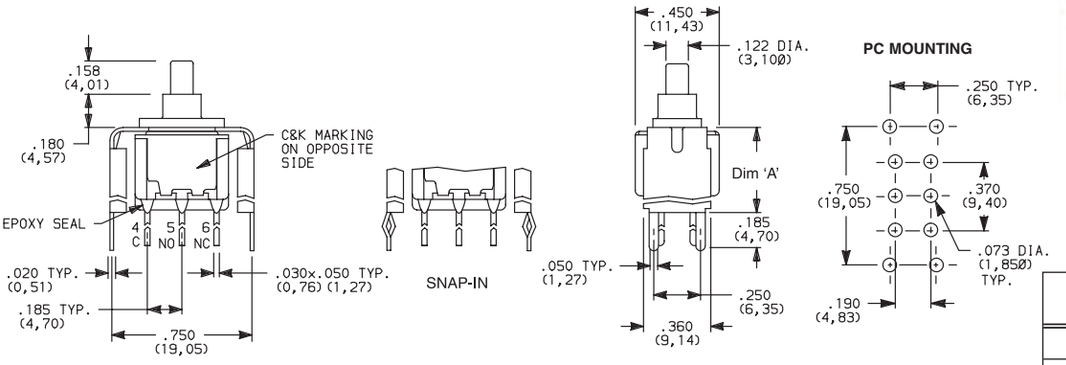

8221SD3__GE
DPDT

OPTION CODE	DIM 'A'
V2	.555 (14,10)
V6, V61	.460 (11,68)
V7	.630 (16,00)
V8	.953 (24,21)

Not available with JXX actuators and I seal.

V2, V7, V8 VERTICAL MOUNT, V-BRACKET

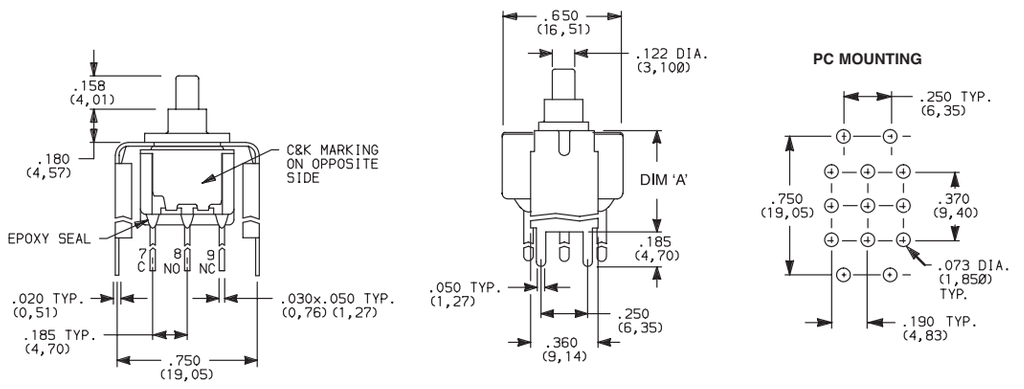

8321SD3__GE
3PDT

OPTION CODE	DIM 'A'
V2	.555 (14,10)
V7	.630 (16,00)
V8	.953 (24,21)

Not available with JXX actuators and I seal.

V2, V7, V8 VERTICAL MOUNT, V-BRACKET

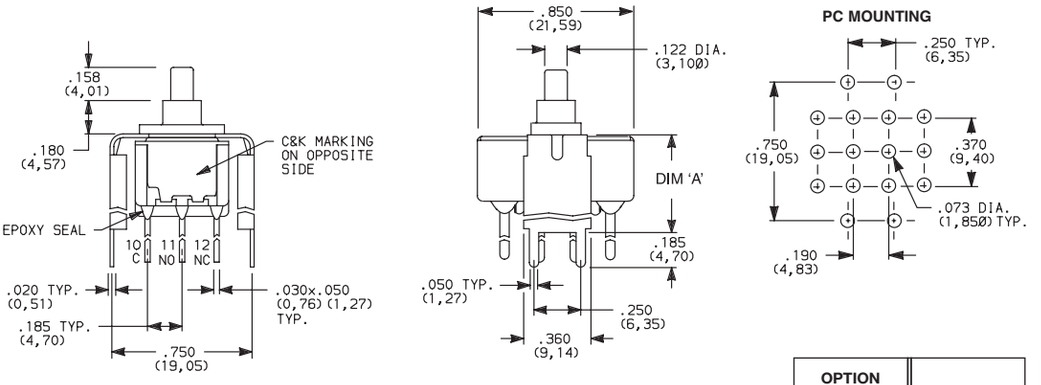

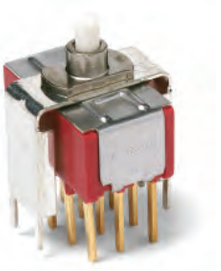

8421SD3__GE
4PDT

OPTION CODE	DIM 'A'
V2	.555 (14,10)
V7	.630 (16,00)
V8	.953 (24,21)

Not available with JXX actuators and I seal.

Third Angle Projection

Dimensions are shown: Inches (mm)
Specifications and dimensions subject to change

8020 Series
Snap-acting Momentary Pushbutton Switches

TERMINATIONS

V3, V4, V9 VERTICAL MOUNT, V-BRACKET

V31 VERTICAL MOUNT, V-BRACKET, SNAP-IN

8121SD3__GE
SPDT

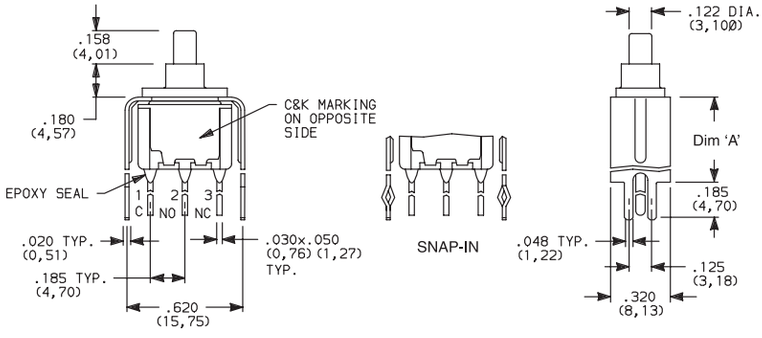

PC MOUNTING

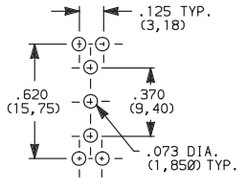

OPTION CODE	DIM 'A'
V3, V31	.460 (11,68)
V4	.630 (16,00)
V9	1.150 (29,21)

Not available with J8X actuators and I seal.

V3, V4, V9 VERTICAL MOUNT, V-BRACKET

V31 VERTICAL MOUNT, V-BRACKET, SNAP-IN

8221SD3__GE
DPDT

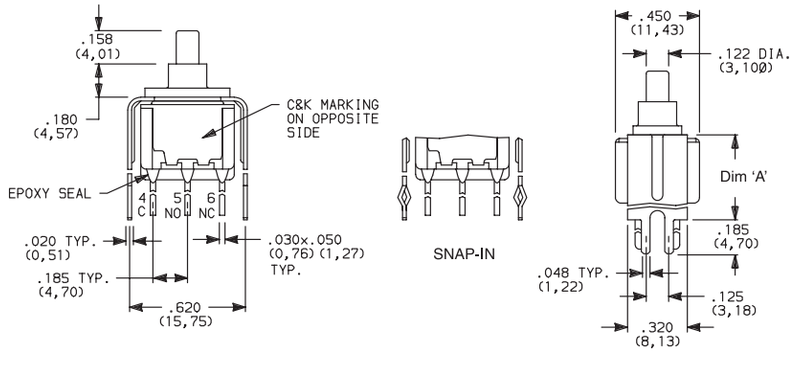

PC MOUNTING

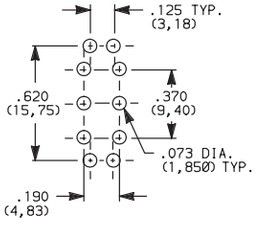

OPTION CODE	DIM 'A'
V3, V31	.460 (11,68)
V4	.630 (16,00)
V9	1.150 (29,21)

Not available with J8X actuators and I seal.

V4, V9 VERTICAL MOUNT, V-BRACKET

8321SD3V4GE
3PDT

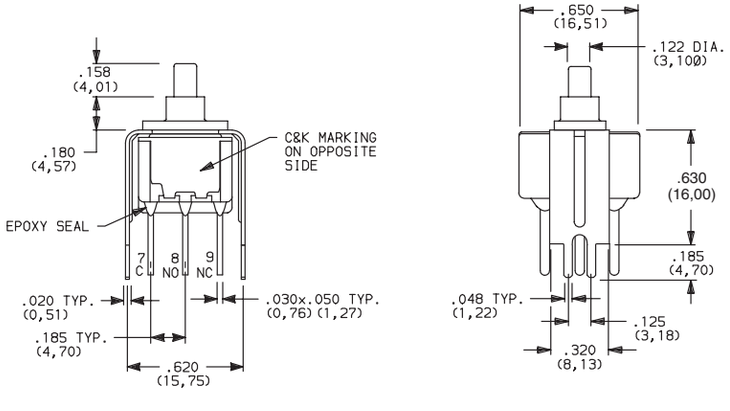

PC MOUNTING

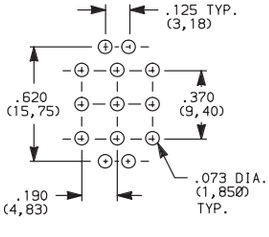

OPTION CODE	DIM 'A'
V4	.630 (16,00)
V9	1.150 (29,21)

Not available with JXX actuators and I seal.

Third Angle Projection

Dimensions are shown: Inches (mm)
Specifications and dimensions subject to change

TERMINATIONS

V4, V9 VERTICAL MOUNT, V-BRACKET

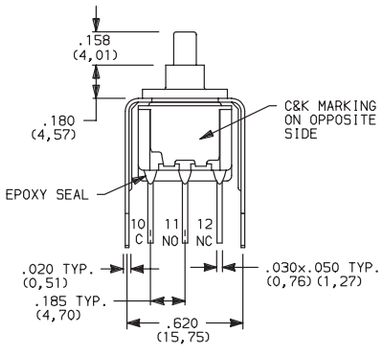

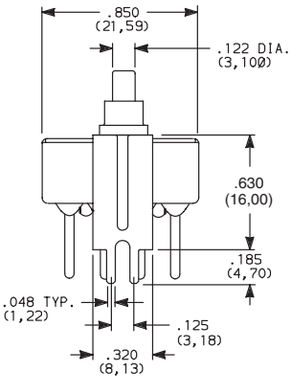

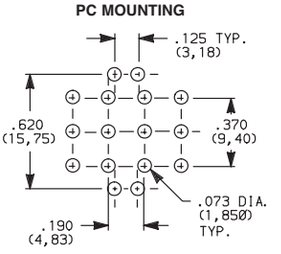

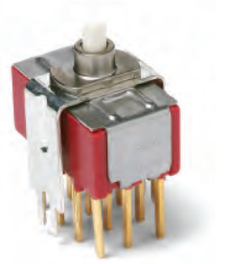

8421SD3V4GE
4PDT

OPTION CODE	DIM 'A'
V4	.630 (16,00)
V9	1.150 (29,21)

Not available with JXX actuators and I seal.

CONTACT MATERIAL

OPTION CODE	CONTACT MATERIAL	TERMINAL PLATING	RATINGS	
B	GOLD [1]	GOLD [1]	LOW LEVEL/DRY CIRCUIT	8x25 MODELS ONLY: 0.4 MAX. @ 20 V AC OR DC MAX.
P		MATTE-TIN [4]		
G	GOLD OVER SILVER [2,3]	GOLD [3]	LOW LEVEL/DRY CIRCUIT OR POWER	8X21, U8X1 MODELS ONLY: 0.4 VA MAX @ 20 V AC OR DC MAX. OR 1 AMP @ 120 V AC OR 28 V DC.
R		MATTE-TIN [4]		

* Note: See Technical Data section of this catalog for RoHS compliant and compatible definitions and specifications.

[1] ALL CONTACTS & TERMINALS: Copper alloy, with gold plate over nickel plate.
[2] N.O. AND N.C. CONTACTS: Coin silver, with gold plate over nickel plate.
[3] COMMON CONTACTS & ALL TERMINALS: Copper alloy, with gold plate over nickel plate.
[4] TERMINALS: Copper alloy, with matte-tin over nickel plate.

NOTE: Any models supplied with B, P, R or G contact material are RoHS compliant.

U811-U841 models with all options (except R, R2 terminations) when ordered with mandatory G or R contact material.

B or P contact material must be ordered with 8X25 models.

G or R contact material must be ordered with 8X21, U8X1 models.

P or R contact material not available with Z, Z3 terminations.

SEAL

E EPOXY SEAL

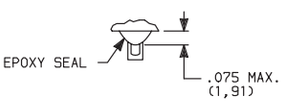

I EPOXY POTTED BASE

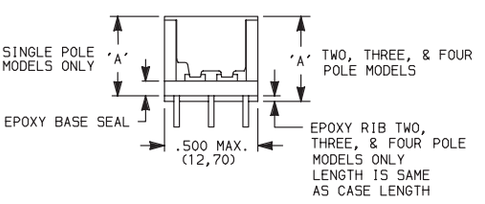

NO. POLES	DIM 'A'
SP	.410 (10,41)
DP	.440 (11,18)
3P	.505 (12,83)
4P	.505 (12,83)

NOTE: Available with C, W-W4, Z, Z3 terminations only.

Third Angle Projection

Dimensions are shown: Inches (mm)
Specifications and dimensions subject to change

8020 Series
Snap-acting Momentary Pushbutton Switches

AVAILABLE HARDWARE

Cap

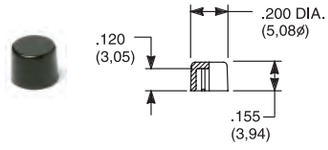

PART NO.

708901000	WHITE
708902000	BLACK
708903000	RED
708904000	ORANGE
708905000	YELLOW
708906000	GREEN
708907000	BLUE
708909000	GRAY

Material: Nylon
Finish: Gloss

Cap

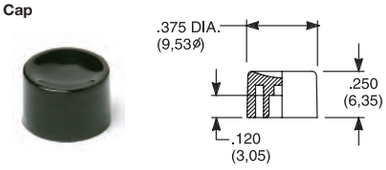

PART NO.

752701000	WHITE
752702000	BLACK
752703000	RED
752704000	ORANGE
752705000	YELLOW
752706000	GREEN
752707000	BLUE
752709000	GRAY

Material: Nylon
Finish: Gloss

Cap

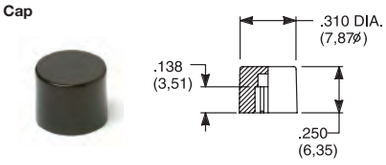

PART NO.

801801000	WHITE
801802000	BLACK
801803000	RED
801804000	ORANGE
801805000	YELLOW
801806000	GREEN
801807000	BLUE
801809000	GRAY

Material: Nylon
Finish: Gloss

Cap, Snap-fitting plunger

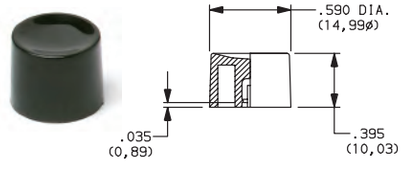

PART NO.

452D01000	WHITE
452D02000	BLACK
452D03000	RED
452D04000	ORANGE
452D05000	YELLOW
452D06000	GREEN
452D07000	BLUE
452D09000	GRAY

Material: Nylon
Finish: Gloss

Cap, Snap-fitting plunger

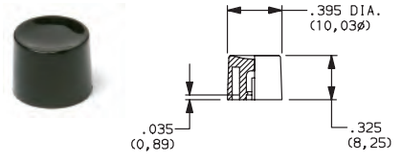

PART NO.

894101000	WHITE
894102000	BLACK
894103000	RED
894104000	ORANGE
894105000	YELLOW
894106000	GREEN
894107000	BLUE
894109000	GRAY

Material: Nylon
Finish: Gloss

Cap, J80, J81, J82, J83 & J84 options only

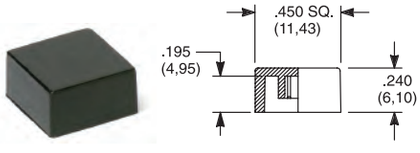

PART NO.

484601000	WHITE
484602000	BLACK
484603000	RED
484604000	ORANGE
484605000	YELLOW
484606000	GREEN
484607000	BLUE
484609000	GRAY

Material: Nylon
Finish: Gloss

PART NO.

798201000	WHITE
798202263	BLACK
798203000	RED
798204000	ORANGE
798205000	YELLOW
798206000	GREEN
798207000	BLUE
798209000	GRAY

Material: Nylon
Finish: Matte

Frame

PART NO.

615602263 BLACK

Material: Nylon
Finish: Matte

Frame

PART NO.

613302263 BLACK

Material: Nylon
Finish: Matte

Cap, J85 & J95 options only

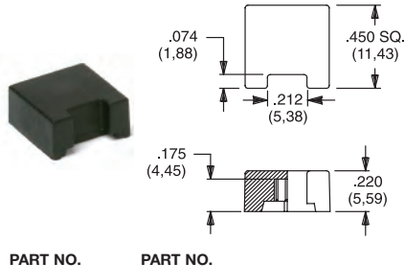

PART NO.

459701000	WHITE
459702000	BLACK
459703000	RED
459704000	ORANGE
459705000	YELLOW
459706000	GREEN
459707000	BLUE
459709000	GRAY

Material: Nylon
Finish: Gloss

PART NO.

476801000	WHITE
476802000	BLACK
476803000	RED
476804000	ORANGE
476805000	YELLOW
476806000	GREEN
476807000	BLUE
476809000	GRAY

Material: Nylon
Finish: Matte

Fits Z3 Termination female connector

PART NO.

530100000

Available in loose pieces.

NOTE: Additional nuts, locking rings and lockwashers available separately, see section "Technical Data and Additional Hardware".
Other cap & frame colors available, consult Customer Service Center.

Third Angle Projection

Dimensions are shown: Inches (mm)
Specifications and dimensions subject to change

AVAILABLE HARDWARE

Frames snap into panel opening and are independent from switch mounting. Accurate positioning of the PC mounted switch relative to the panel opening is necessary to provide proper clearance between actuator and frame. Available in two basic styles and four panel thicknesses .047-.125 in. Material: Nylon. Finish: Matte.

TYPICAL APPLICATION

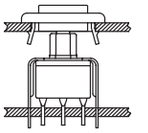

.047" (1,19) PANEL THK.	.062" (1,57) PANEL THK.	.090" (2,29) PANEL THK.	.125" (3,18) PANEL THK.
PART NO.	**PART NO.**	**PART NO.**	**PART NO.**
432502263	432602263	432702263	432802263 BLACK

PANEL MOUNTING

For part numbers
4325xxxxx, 4326xxxxx

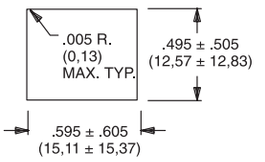

For part numbers
4327xxxxx, 4328xxxxx

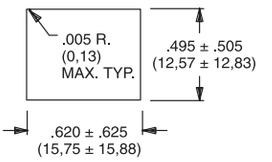

Panel Inserts

Above frames (part nos. 432XXXXXX) are also available with insert which accepts LED for indicator light assembly. Order insert separately from frame. Blank insert panel (without hole for LED) also available. **LED not included.**

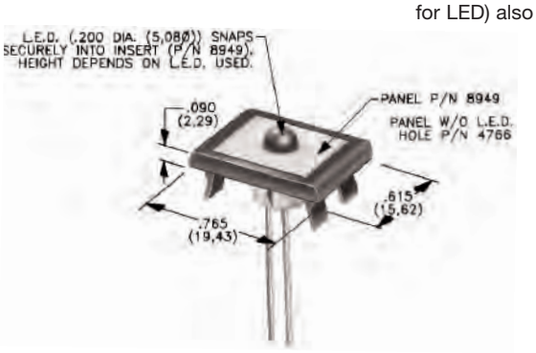

PANEL INSERT WITH HOLE FOR LED	BLANK PANEL INSERT WITHOUT HOLE FOR LED
PART NO.	**PART NO.**
894902000	476602000 BLACK

Special colors, custom markings available, consult Customer Service Center.

LED INFORMATION

SWITCHES WITH LED SUPPLIED: J85, J95 OPTIONS:
Rectangular LEDs are supplied on 8020 Series pushbutton switches with J85 and J95 options. These LEDs are factory installed and are not replaceable. The following specifications apply:

OPTION CODE	COLOR	TYP. INTENSITY	TYP. FORWARD VOLTAGE	TYP. FORWARD CURRENT	MAX RATINGS AT 25ºC AMBIENT TEMPERATURE		
					FORWARD VOLTAGE	CONTINUOUS FORWARD CURRENT	POWER DISSIPATION
6	Green	1.0 mcd	2.1 V	20 mA	2.5 V	50 mA	125 mW
3	Red*	0.5 mcd		10 mA		30 mA	75 mW
5	Yellow	4.0 mcd		20 mA		50 mA	125 mW

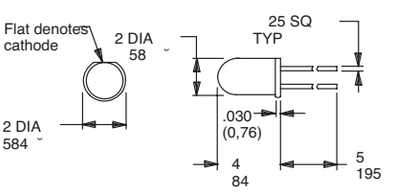

Suggested LED for J82 & J84 options
Dimensions for reference only

Process Information: Soldering to LED leads must be completed within 5 seconds at 500ºF (260ºC) maximum.
Caution: Circuit elements must limit forward current of LED to 50mA max. continuous.
* Extra-bright red LED available (typ. intensity 4.5 mcd), consult Customer Service Center.
LEDs are not supplied with J82, J84 options. LED snaps into switch frame surrounding actuator and is wired externally.

Third Angle Projection

Dimensions are shown: Inches (mm)
Specifications and dimensions subject to change

E010 Series
Sealed Momentary Pushbutton Switches

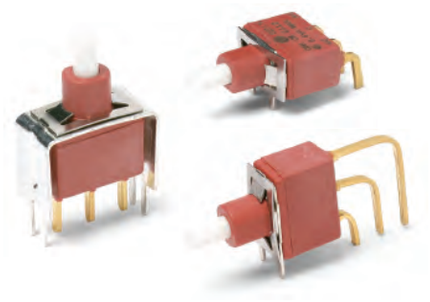

Features/Benefits

- *Process sealed, withstands soldering and cleaning*
- *Long life contact design*
- *Snap-fitting plunger available, accepts a variety of caps*
- *RoHS compliant models available*

Typical Applications

- *Instrumentation*
- *Telecommunications and networking equipment*
- *Computers and peripherals*

Models Available

Specifications

CONTACT RATING: Q contact material: 4 AMPS @ 125 V AC or 28 V DC. See page A-50 for additional ratings.

ELECTRICAL LIFE: 40,000 make-and-break cycles at full load.

CONTACT RESISTANCE: Below 20 mΩ typ. initial @ 2–4 V DC, 100 mA, for both silver and gold plated contacts.

INSULATION RESISTANCE: 10^9Ω min.

DIELECTRIC STRENGTH: 1000 Vrms min. @ sea level.

OPERATING TEMPERATURE: -30°C to 75°C.

CAP INSTALLATION FORCE: 10 lbs. max. permissible.

SOLDERABILITY: Per MIL-STD-202F method 208D, or EIA RS-186E method 9 (1 hour steam aging).

NOTE: Any models supplied with P, Q, B or G contact material are RoHS compliant.

NOTE: Specifications and materials listed above are for switches with standard options. For information on specific and custom switches, consult Customer Service Center.

Materials

CASE & BUSHING: Glass filled nylon 6/6, flame retardant (UL 94V-0).

PLUNGER: Glass filled nylon or glass filled polyester (PBT) (UL 94V-0), with internal o-ring seal standard.

SWITCH SUPPORT: Brass or steel, matte-tin plated.

SWITCH SUPPORT RETAINER: Stainless steel.

END CONTACTS: Q contact material: Coin silver, silver plated. See A-50 for additional ratings.

CENTER CONTACTS & ALL TERMINALS: Q contact material: Copper alloy, silver plated. See page A-50 for additional ratings.

TERMINAL SEAL: Epoxy.

HARDWARE: Nut & locking ring-Brass, nickel plated. Lockwasher-Steel, nickel plated.

Build-A-Switch

To order, simply select desired option from each category and place in the appropriate box. Available options are shown and described on pages A-47 thru A-51. For additional options not shown in catalog, consult Customer Service Center. All models are process sealed to withstand machine soldering temperatures and pressure wash cleaning methods.

Switch Function
E112 SPDT On-Mom.

Plunger
S .222" high
L .338" high
M .331" high, snap-fitting

Bushing
D1 Unthreaded
Y Threaded, keyway

Terminations
A Right angle, PC thru-hole
AV2 Vertical right angle, PC thru-hole
C PC Thru-hole
A3 Right angle, snap-in, PC thru-hole
AV3 Vertical right angle, snap-in, PC thru-hole
R2 Right angle with PCB
V3 .460" high, V-bracket
V4 .630" high, V-bracket
V6 .460" high, V-bracket
V8 .953" high, V-bracket
V31 .460" high, snap-in V-bracket
V81 .953" high, snap-in V-bracket
V91 1.150" high, snap-in V-bracket
W .750" long, wire wrap
Z Solder lug

Contact Material
B Gold
P Gold, matte-tin
Q Silver
G Gold over silver

Seal
E Epoxy

Dimensions are shown: Inches (mm)
Specifications and dimensions subject to change

E010 Series
Sealed Momentary Pushbutton Switches

SWITCH FUNCTION

NO. POLES	MODEL NO.	SWITCH FUNCTION POS. 1 (C&K marking this side)	SWITCH FUNCTION POS. 2 (C&K marking this side)	CONNECTED TERMINALS POS. 1 (C&K marking this side)	CONNECTED TERMINALS POS. 2 (C&K marking this side)	SCHEMATIC
SP	E112	ON	MOM.	2-1	2-3	SPDT: NC 1, 2 (COMM), 3 NO

SPDT

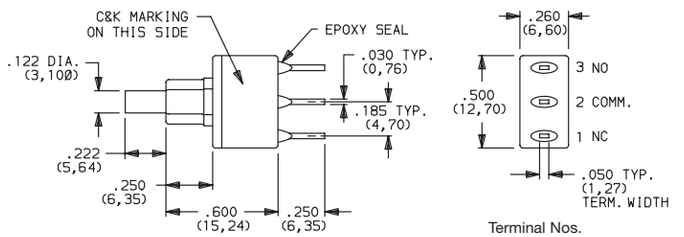

Part number shown: E112SD1CQE

MOM. = Momentary

All models c UL us with all options when ordered with G or Q contact material.

PLUNGER

S .218" HIGH

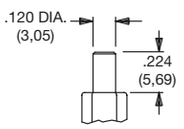

Standard with D1 bushing (as shown).

† Subtract .100 (2,54) from plunger length when ordered with Y bushing.

L .338" HIGH

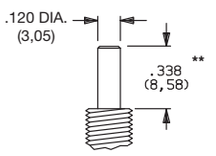

Standard with Y bushing (as shown).

** Add .100 (2,54) from plunger length when ordered with D1 bushing.

M .331" HIGH, SNAP-FITTING

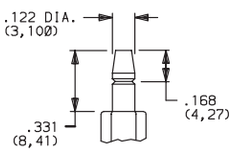

NOTE: Caps available for all plunger options, see pages A-50 and A-51.

BUSHING

D1 UNTHREADED

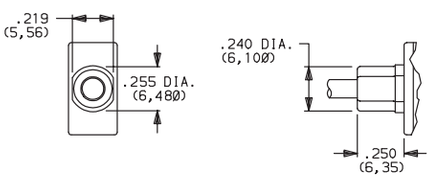

S plunger standard with D1 bushing.

Y THREADED, KEYWAY

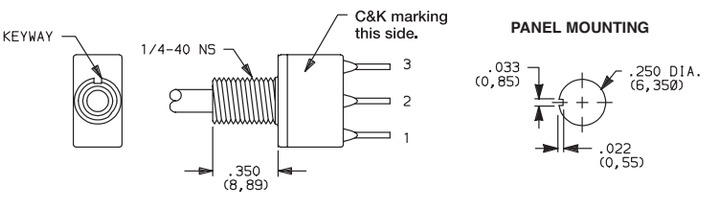

L plunger standard with Y bushing. Available only with C, Z terminations.
Hardware: One dress nut part number 299D01201, one hex nut and lockwasher supplied standard.

Withstands 4 in./lbs. without distortion.

NOTE: Internal o-ring actuator seal standard for all bushing options.

Third Angle Projection

Dimensions are shown: Inches (mm)
Specifications and dimensions subject to change

E010 Series
Sealed Momentary Pushbutton Switches

TERMINATIONS

C PC THRU-HOLE

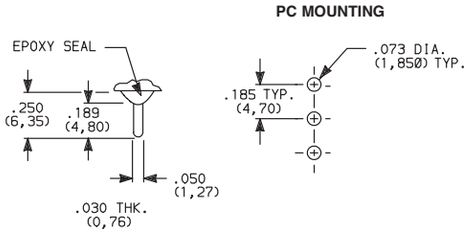

SPDT

Z SOLDER LUG

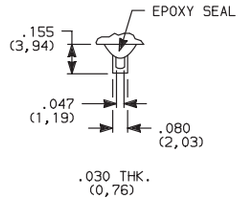

SPDT Not available with P contact materials.

W WIRE WRAP

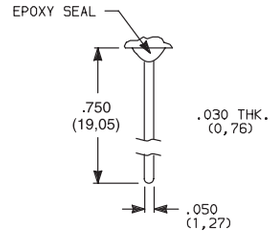

SPDT

A RIGHT ANGLE, PC THRU-HOLE

E112SD1ABE
SPDT

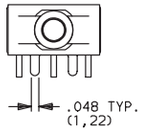

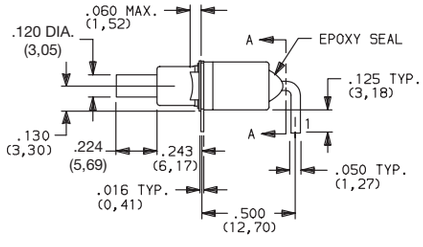

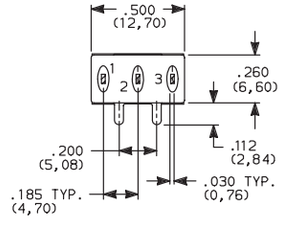

SECTION A-A

A3 RIGHT ANGLE, SNAP-IN, PC THRU-HOLE

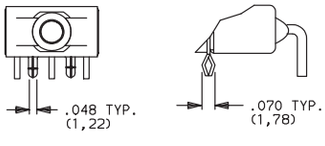

AW RIGHT ANGLE, EXTENDED, PC THRU-HOLE

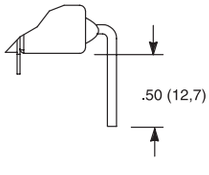

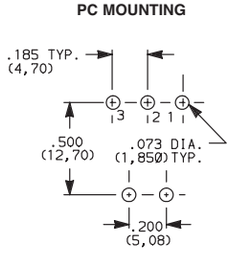

NOTE: Terminal bend radii and lead-in manufacturing option.
Available with D1 bushing only.

AV2 VERTICAL RIGHT ANGLE, PC THRU-HOLE, .150" PITCH

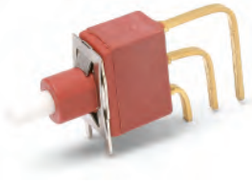

E112SD1AV2BE
SPDT

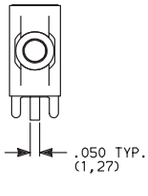

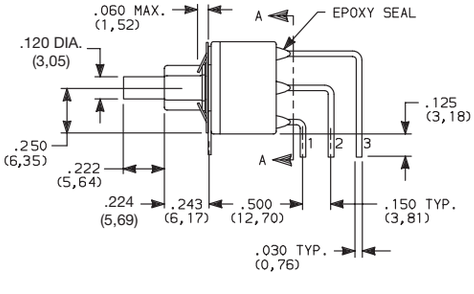

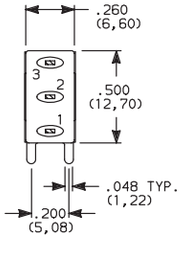

SECTION A-A

AV3 VERTICAL RIGHT ANGLE, SNAP-IN, PC THRU-HOLE, .150" PITCH

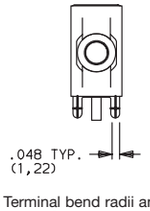

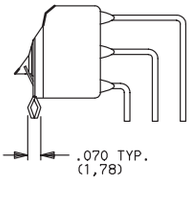

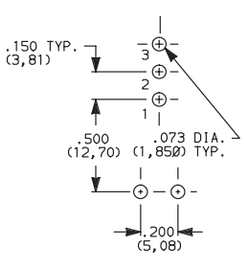

NOTE: Terminal bend radii and lead-in manufacturing option.
Available with D1 bushing only.

Third Angle Projection

Dimensions are shown: Inches (mm)
Specifications and dimensions subject to change

TERMINATIONS

R2 RIGHT ANGLE WITH PCB

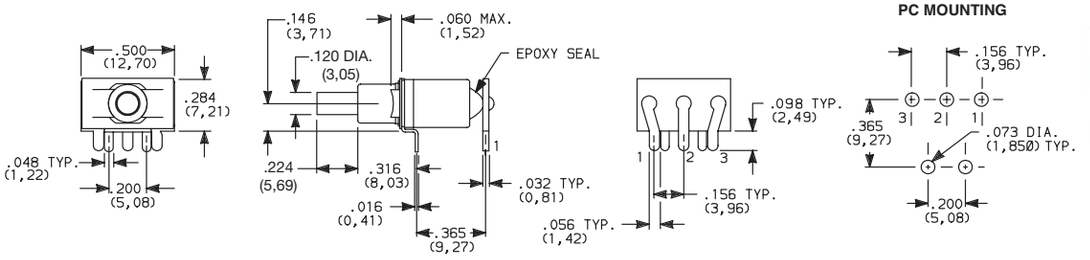

E112SD1R2BE
SPDT

NOTE: Available with D1 bushing and B contact material only.

V3, V4 VERTICAL MOUNT, V-BRACKET
V31, V91 VERTICAL MOUNT, V-BRACKET, SNAP-IN

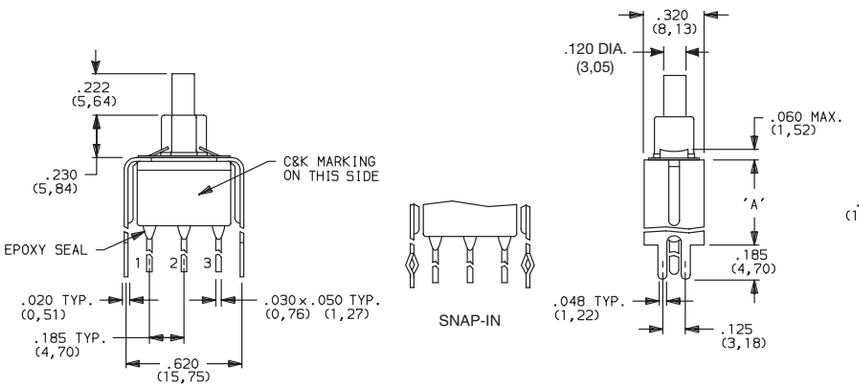

E112SD1__BE
SPDT

OPTION CODE	DIM 'A'
V3, V31	.460 (11,68)
V4	.630 (16,00)
V91	1.150 (29,21)

NOTE: Available with D1 bushing only.

V6, V8 VERTICAL MOUNT, V-BRACKET
V81 VERTICAL MOUNT, V-BRACKET, SNAP-IN

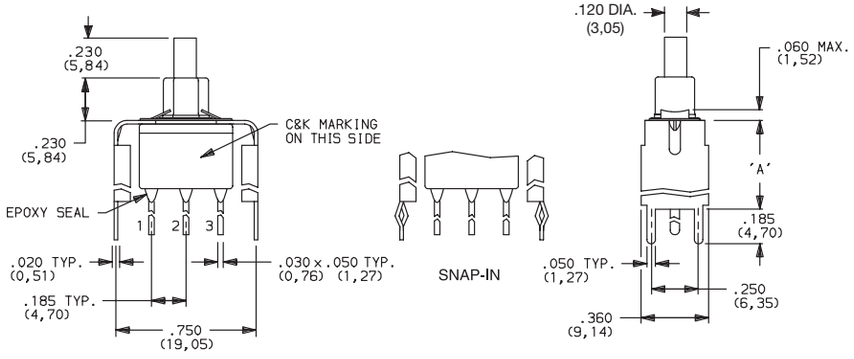

E112SD1__BE
SPDT

OPTION CODE	DIM 'A'
V6	.460 (11,68)
V8, V81	.953 (24,21)

NOTE: Available with D1 bushing only.

Third Angle Projection

Dimensions are shown: Inches (mm)
Specifications and dimensions subject to change

E010 Series
Sealed Momentary Pushbutton Switches

CONTACT MATERIAL

OPTION CODE	CONTACT MATERIAL	TERMINAL PLATING	RATINGS	
B	GOLD [1]	GOLD [1]	LOW LEVEL/DRY CIRCUIT	0.4 VA MAX. @ 20 V AC OR DC MAX.
P		MATTE-TIN [6]		
Q	SILVER [4,5]	SILVER [5]	POWER	4 AMPS @ 125 V AC 0R 28 V DC.
G	GOLD OVER SILVER [2,3]	GOLD [3]	LOW LEVEL/DRY CIRCUIT OR POWER	0.4 VA MAX. @ 20 V AC OR DC MAX. OR 4 AMPS @ 125 V AC 0R 28 V DC.

* Note: See Technical Data section of this catalog for RoHS compliant and compatible definitions and specifications.

[1] CONTACTS & TERMINALS: Copper alloy, with gold plate over nickel plate.
[2] END CONTACTS: Coin silver, with gold plate over nickel plate.
[3] CENTER CONTACTS & ALL TERMINALS: Coin silver, with gold plate over nickel plate.
[4] END CONTACTS: Coin silver, silver plated.
[5] CENTER CONTACTS & ALL TERMINALS: Copper alloy, silver plated.
[6] TERMINALS: Copper alloy, with matte-tin over nickel plate.

NOTE: Any models supplied with P, Q, B or G contact material are RoHS compliant.

All models c UL us with all options when ordered with G or Q contact material.
B contact material standard with all terminations except C, Z.
B contact material must be ordered with R2 terminations.
Q contact material standard with C, Z terminations.
P contact materials not available with Z terminations.

SEAL

E EPOXY SEAL

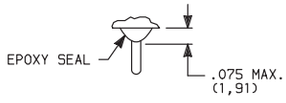

AVAILABLE HARDWARE

Cap

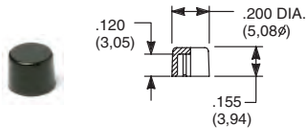

PART NO.
708901000 WHITE
708902000 BLACK
708903000 RED

Material: Nylon
Finish: Gloss

Cap

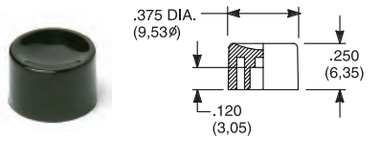

PART NO.
752701000 WHITE
752702000 BLACK
752703000 RED

Material: Nylon
Finish: Gloss

Cap

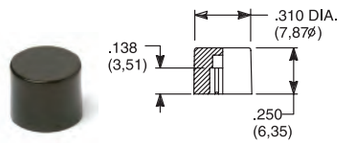

PART NO.
801801000 WHITE
801802000 BLACK
801803000 RED

Material: Nylon
Finish: Gloss

NOTE: Additional nuts, locking rings and lockwashers available separately, see section "Technical Data and Additional Hardware".
Other cap colors available, consult Customer Service Center.

Third Angle Projection

Dimensions are shown: Inches (mm)
Specifications and dimensions subject to change

AVAILABLE HARDWARE

Cap, Snap-fitting plunger

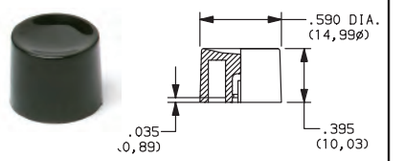

PART NO.

452D01000	WHITE
452D02000	BLACK
452D03000	RED

Material: Nylon
Finish: Gloss

Cap, Snap-fitting plunger

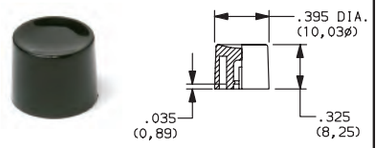

PART NO.

894101000	WHITE
894102000	BLACK
894103000	RED

Material: Nylon
Finish: Gloss

Cap

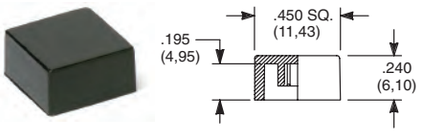

PART NO.

484601000	WHITE
484602000	BLACK
484603000	RED

Material: Nylon
Finish: Gloss

PART NO.

798201000	WHITE
798202263	BLACK
798203000	RED

Material: Nylon
Finish: Matte

NOTE: Additional nuts, locking rings and lockwashers available separately, see section "Technical Data and Additional Hardware".
Other cap colors available, consult Customer Service Center.

Frames snap into panel opening and are independent from switch mounting. Accurate positioning of the PC mounted switch relative to the panel opening is necessary to provide proper clearance between actuator and frame. Available in two basic styles and four panel thicknesses .047-.125 in. Material: Nylon. Finish: Matte.

TYPICAL APPLICATION

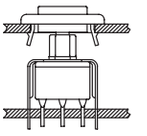

.047" (1,19) PANEL THK.	.062" (1,57) PANEL THK.	.090" (2,29) PANEL THK.	.125" (3,18) PANEL THK.
PART NO.	**PART NO.**	**PART NO.**	**PART NO.**
432502263	432602263	432702263	432802263 BLACK

PANEL MOUNTING

For part numbers
4325xxxxx, 4326xxxxx

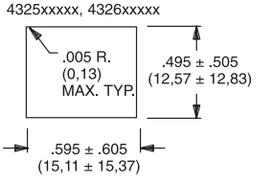

For part numbers
4327xxxxx, 4328xxxxx

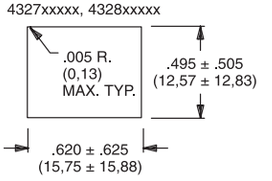

Panel Inserts

Above frames (part nos. 432XXXXXX) are also available with insert which accepts LED for indicator light assembly. Order insert separately from frame. Blank insert panel (without hole for LED) also available. **LED not included.**

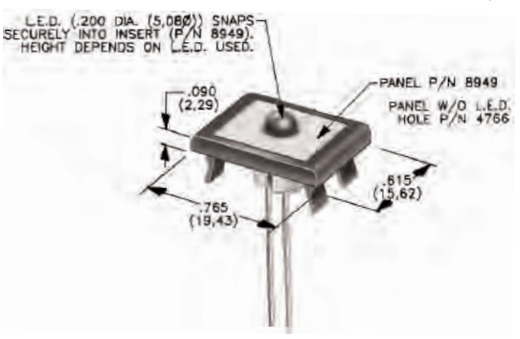

PANEL INSERT WITH HOLE FOR LED	BLANK PANEL INSERT WITHOUT HOLE FOR LED
PART NO.	**PART NO.**
894902000	476602000 BLACK

Special colors, custom markings available, consult Customer Service Center.

Third Angle Projection

Dimensions are shown: Inches (mm)
Specifications and dimensions subject to change

8060 Series
Alternate Action and Momentary Pushbutton Switches

Features/Benefits

- *Long travel*
- *Available with LED*
- *Long life contact design*
- *Epoxy terminal seal compatabile with bottom wash cleaning*
- *RoHS compliant models available*

Typical Applications

- *Instrumentation*
- *Computers and peripherals*
- *Telecommunications and networking equipment*

Models Available

Specifications

CONTACT RATING: Q contact material: 6 AMPS @ 120 V AC or 28 V DC; 3 AMPS @ 250 V AC. See page A-59 for additional ratings.

ELECTRICAL LIFE: 50,000 make-and-break cycles at full load.

CONTACT RESISTANCE: Below 20 mΩ typ. initial @ 2-4 V DC, 100 mA, for both silver and gold plated contacts.

INSULATION RESISTANCE: $10^9\Omega$ min.

DIELECTRIC STRENGTH: 1,000 Vrms min. @ sea level.

OPERATING TEMPERATURE: –30°C to 65°C

SOLDERABILITY: Per MIL-STD-202F method 208D, or EIA RS-186E method 9 (1 hour steam aging).

CAP INSTALLATION FORCE: 10 lbs. maximum permissible.

NOTE: Any models supplied with P, R, S, Q, B or G contact material are RoHS compliant.

NOTE: Specifications and materials listed above are for switches with standard options. For information on specific and custom switches, consult Customer Service Center.

Materials

CASE: Glass filled nylon 6/6 or diallyl phthalate (DAP), flame retardant (UL 94V-0).

PLUNGER: S, S1, S2 Options: Glass filled nylon or glass filled polyester (PBT) (UL 94V-0). L, L1 Options: Brass, nickel plated.

CAP & FRAME: Nylon, black standard.

BUSHING: Brass or zinc, nickel plated.

HOUSING: Stainless steel.

SWITCH SUPPORT: Brass or steel, matte-tin plated.

END CONTACTS: Q contact material: Coin silver, silver plated. See page A-59 for additional contact materials.

CENTER CONTACT & ALL TERMINALS: Q contact material: Copper alloy, silver plated. See page A-59 for additional contact materials.

TERMINAL SEAL: Epoxy. Refer to soldering and cleaning in Technical Data Chapter.

HARDWARE: Nut & Locking Ring: Brass, nickel plated; Lockwasher: Steel, nickel plated.

Build-A-Switch

To order, simply select desired option from each category and place in the appropriate box. Available options are shown and described on pages A-53 thru A-61. For additional options not shown in catalog, consult Customer Service Center. All models have epoxy terminal seal and are compatible with all "bottom-wash" PCB cleaning methods.

Switch Function
- **8161** SPDT On-On
- **8168** SPDT On-Mom.
- **8261** DPDT On-On

Actuator or Plunger
- **S** .710" high plunger with .375" dia. cap
- **J80** Snap-in
- **J81** Snap-in with frame
- **J82** Snap-in with frame for LED
- **J86** Snap-in with frame & LED
- **L** .740" high plunger with .395" dia. cap
- **L1** .740" high plunger with .590" dia. cap
- **S1** .615" high plunger with .200" dia. cap
- **S2** .710" high plunger with .310" dia. cap

Bushing
- **H** .300" high, flat, hi torque
- **H9** .300" high, flat, hi torque
- **NONE** No bushing choice required
- **Y3** 7.6mm, keyway

Terminations
- **A** Right angle, PC thru-hole
- **AV2** Vertical right angle, PC thru-hole
- **C** PC Thru-hole
- **Z** Solder lug
- **A3** Right angle, snap-in, PC thru-hole
- **AV3** Vertical right angle, snap-in, PC thru-hole
- **V3** .460" high, V-bracket
- **V4** .630" high, V-bracket
- **V6** .460" high, V-bracket
- **V21** .555" high, snap-in V-bracket
- **V31** .460" high, snap-in V-bracket
- **W** .750" long, wire wrap
- **Z3** Quick connect

Contact Material
- **B** Gold
- **P** Gold, matte-tin
- **Q** Silver
- **S** Silver, matte-tin
- **G** Gold over silver
- **R** Gold over silver, matte-tin

Seal
- **E** Epoxy
- **I** Epoxy potted base

Cap Color
- **2** Black
- **1** White
- **3** Red
- **4** Orange
- **5** Yellow
- **9** Gray

Frame Color
- **2** Black

LED Color
- **3** Red
- **NONE** Models without LED

8060 Series
Alternate Action and Momentary Pushbutton Switches

SWITCH FUNCTION

NO. POLES	MODEL NO.	SWITCH FUNCTION POS. 1	SWITCH FUNCTION POS. 2	CONNECTED TERMINALS POS. 1	CONNECTED TERMINALS POS. 2	SCHEMATIC
		C&K marking this side		C&K marking this side		
SP	8161	ON	ON	2-3	2-1	SPDT
	8168	ON	MOM.	2-3	2-1	
DP	8261	ON	ON	2-3,5-6	2-1,5-4	DPDT

SPDT

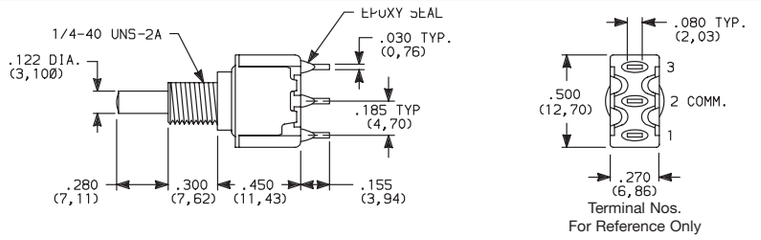

Part number shown: 8161SHZQE

DPDT

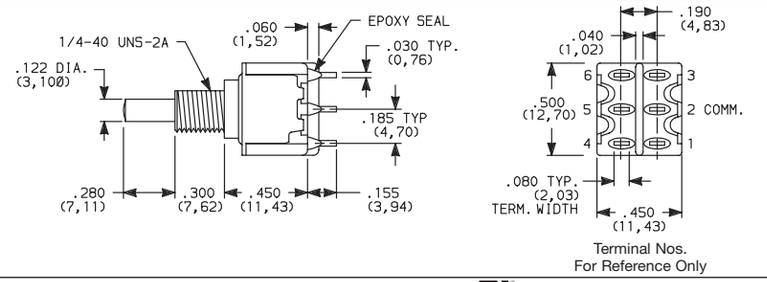

Part number shown: 8261SHZQE

MOM. = Momentary

All models c UL us with all options when ordered with G or Q contact material.

ACTUATOR—SNAP-IN FRONT MOUNT

CAP COLOR

ACTUATOR OR PLUNGER

OPTION CODE	CAP COLOR
2	BLACK
1	WHITE
3	RED
4	ORANGE
5	YELLOW
9	GRAY

Cap Finish: matte.
Other colors available, consult Customer Service Center.

Available with C, W, Z or Z3 terminations.

NOTE: Caps & frames available separately, see pages A-60 and A-61.

J80 SNAP-IN

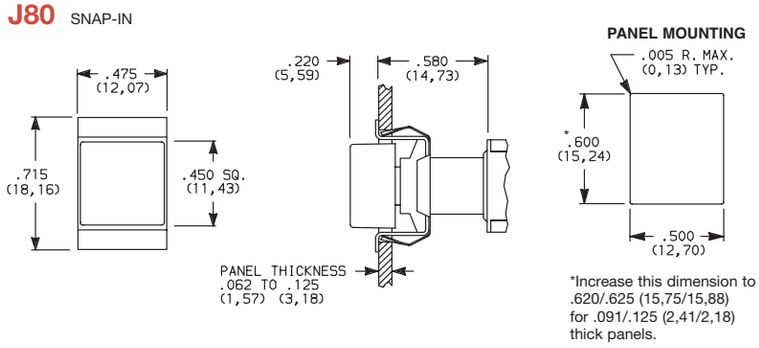

J81 SNAP-IN WITH BLACK FRAME

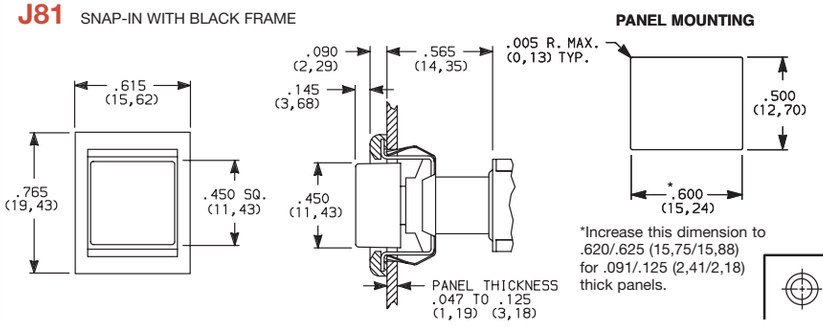

Third Angle Projection

Dimensions are shown: Inches (mm)
Specifications and dimensions subject to change

8060 Series
Alternate Action and Momentary Pushbutton Switches

ACTUATOR—SNAP-IN FRONT MOUNT

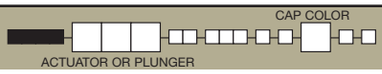

J82 SNAP-IN WITH BLACK FRAME FOR LED

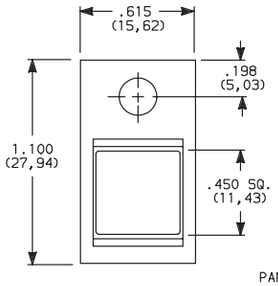

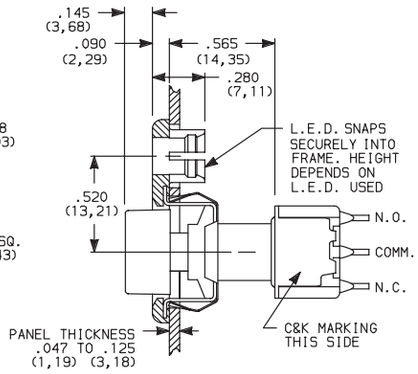

PANEL MOUNTING

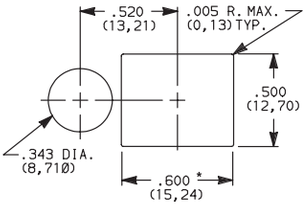

* Increase this dimension to .620/.625 (15,75/15,88) for .091/.125 (2,31/3,18) thick panels.

Available with C, W, Z or Z3 terminations.

LED not included.
For LED information, see page A-61.

NOTE: Caps & frames available separately, see pages A-60 and A-61.

Other colors available, consult Customer Service Center.

OPTION CODE	CAP COLOR
2	BLACK
1	WHITE
3	RED
4	ORANGE
5	YELLOW
9	GRAY

ACTUATOR—SNAP-IN FRONT MOUNT

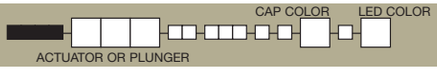

J86 SNAP-IN WITH BLACK FRAME AND LED

8161J86ZQE223
SPDT

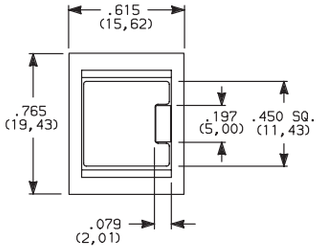

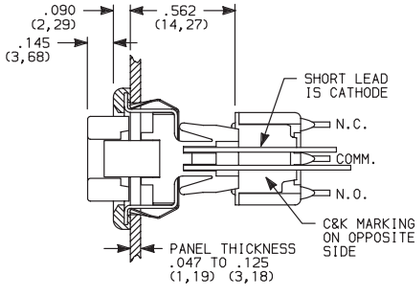

PANEL MOUNTING

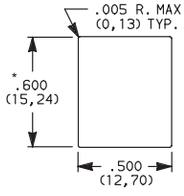

* Increase this dimension to .620/.625 (15,75/15,88) for .091/.125 (2,31/3,18) thick panels.

Available with C, W, Z or Z3 terminations and SPDT models only.

NOTE: Caps & frames available separately, see pages A-60 and A-61.

Other colors available, consult Customer Service Center.

OPTION CODE	CAP COLOR
2	BLACK
1	WHITE
3	RED
4	ORANGE
5	YELLOW
9	GRAY

OPTION CODE	LED COLOR
3	RED

For LED information, see page A-61.

Third Angle Projection

Dimensions are shown: Inches (mm)
Specifications and dimensions subject to change

PLUNGER

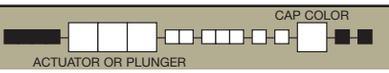

S PLUNGER WITH CAP P/N 7527

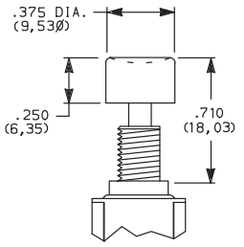

S1 PLUNGER WITH CAP P/N 7089

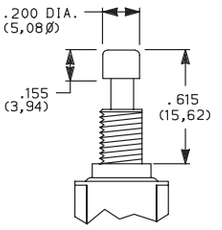

S2 PLUNGER WITH CAP P/N 8018

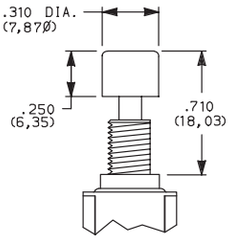

S, S1, S2 plunger dimensions.

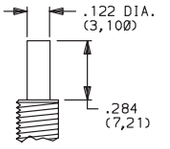

Plunger material: Glass filled nylon or glass filled polyester (UL 94V-0).

L PLUNGER WITH CAP P/N 8941

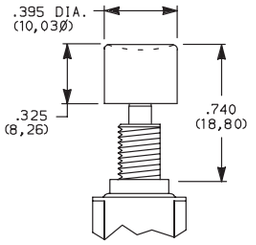

L1 PLUNGER WITH CAP P/N 8940

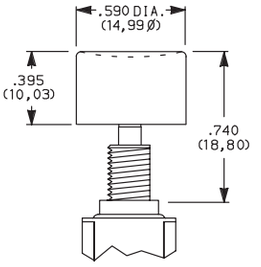

L, L1 plunger dimensions.

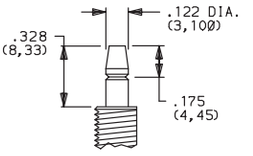

Plunger Material: Brass, chrome plated.

OPTION CODE	CAP COLOR
2	BLACK
1	WHITE
3	RED
4	ORANGE
5	YELLOW
9	GRAY

Cap Finish: gloss. Cap supplied not installed. Other colors available, consult Customer Service Center.

NOTE: When selecting plunger and cap option, bushing selection must also be made, see below.

BUSHING

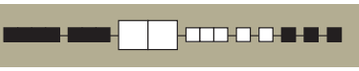

H .300" HIGH THREADED, FLAT

H9 .300" HIGH UNTHREADED, FLAT

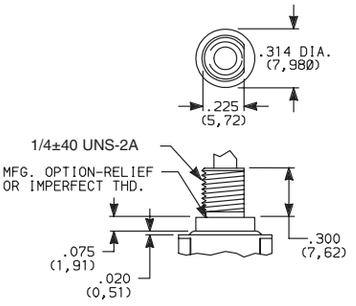

H bushing standard with C, W, Z or Z3 terminations.
H9 bushing standard with A, A3, AV2, AV3, or V3-V31 terminations.

Withstands 12 in./lbs. of torque with no distortion.

NONE NO BUSHING CHOICE REQUIRED (JXX ACTUATORS)

Y3 7.6mm THREADED, KEYWAY

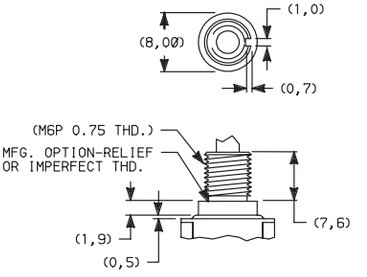

Withstands 12 in./lbs. of torque with no distortion.

NOTE: When selecting bushing option, plunger selection must also be made, see above. No bushing option choice required when any JXX actuator option is selected.

PANEL MOUNTING

1/4 IN. BUSHING

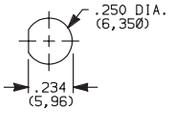

Without Locking Ring

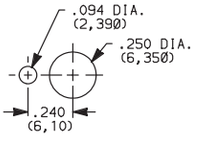

With Standard Locking Ring

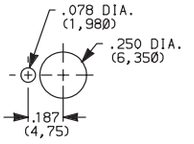

With Small Locking Ring

METRIC BUSHING

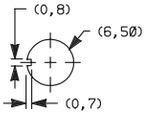

Without Locking Ring

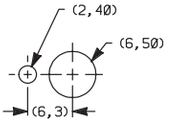

With Locking Ring

NOTE. Two mounting nuts, locking ring and lockwasher supplied standard with threaded bushings. Optional mounting nut and locking ring styles and finishes available, see section "Technical Data and Additional Hardware".

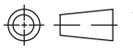

Third Angle Projection

Dimensions are shown: Inches (mm)
Specifications and dimensions subject to change

8060 Series
Alternate Action and Momentary Pushbutton Switches

TERMINATIONS

C PC THRU-HOLE

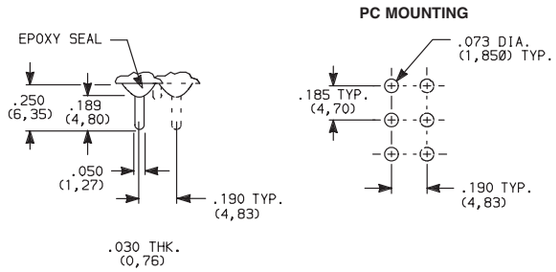

SPDT and DPDT

Z SOLDER LUG

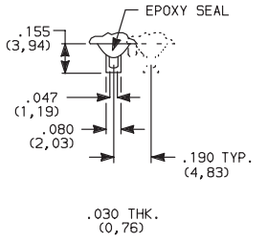

SPDT and DPDT

Not available with P, S or R contact material.

Z3 QUICK CONNECT

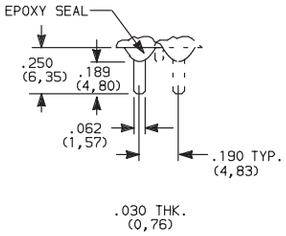

SPDT and DPDT

Not available with P, S or R contact material.
Mating quick connector available;
order part number 530100000, page A-61.

W WIRE WRAP

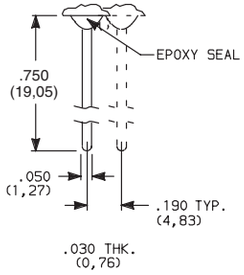

SPDT and DPDT

A RIGHT ANGLE, PC THRU-HOLE

8161SH9ABE2
SPDT

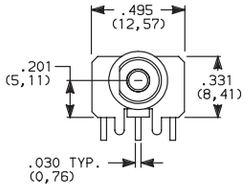

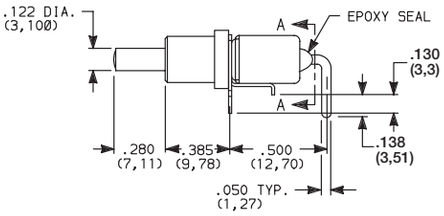

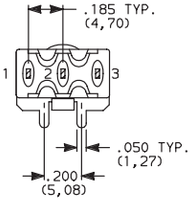

SECTION A-A

A3 RIGHT ANGLE, SNAP-IN, PC THRU-HOLE

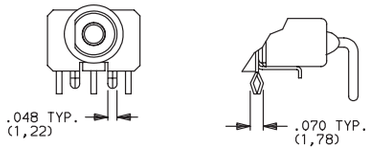

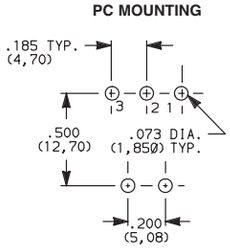

NOTE: PC pattern must clear switch support leg.

Not available with I seal.
Terminal bend radii and lead-in manufacturing option.

Third Angle Projection

Dimensions are shown: Inches (mm)
Specifications and dimensions subject to change

TERMINATIONS

A RIGHT ANGLE, PC THRU-HOLE

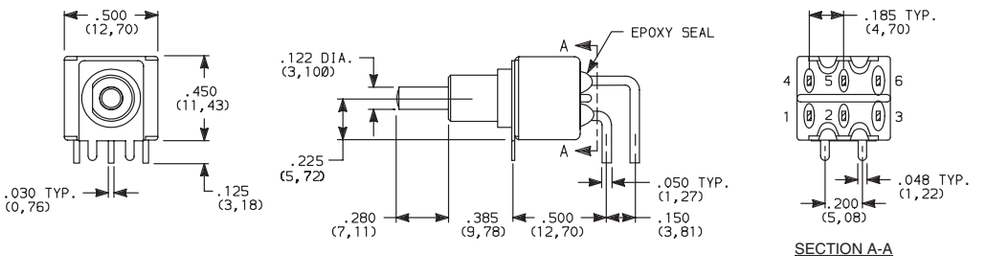

8261SH9ABE2
DPDT

A3 RIGHT ANGLE, SNAP-IN, PC THRU-HOLE

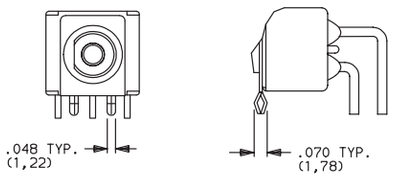

PC MOUNTING

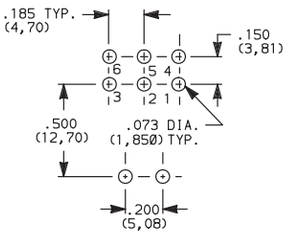

Not available with I seal.
Terminal bend radii and lead-in manufacturing option.

AV2 VERTICAL RIGHT ANGLE, PC THRU-HOLE, .150" PITCH

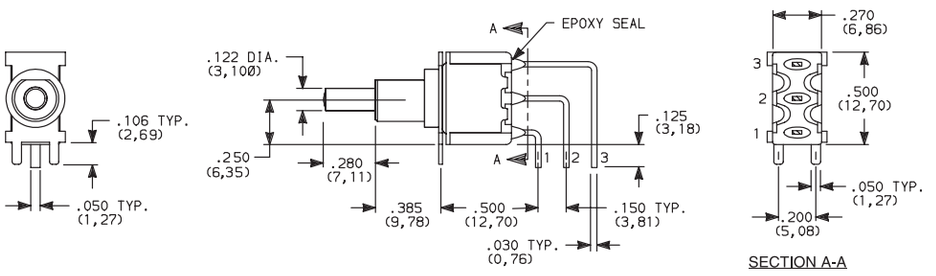

8161SH9AV2BE2
SPDT

AV3 VERTICAL RIGHT ANGLE, SNAP-IN, PC THRU-HOLE, .150" PITCH

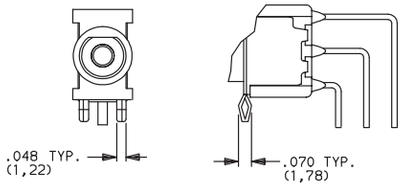

PC MOUNTING

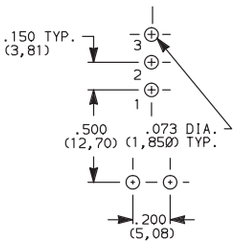

Not available with I seal.
Terminal bend radii and lead-in manufacturing option.

Third Angle Projection

Dimensions are shown: Inches (mm)
Specifications and dimensions subject to change

8060 Series
Alternate Action and Momentary Pushbutton Switches

TERMINATIONS

AV2 VERTICAL RIGHT ANGLE, PC THRU-HOLE, .150" PITCH

8261SH9AV2BE2
DPDT

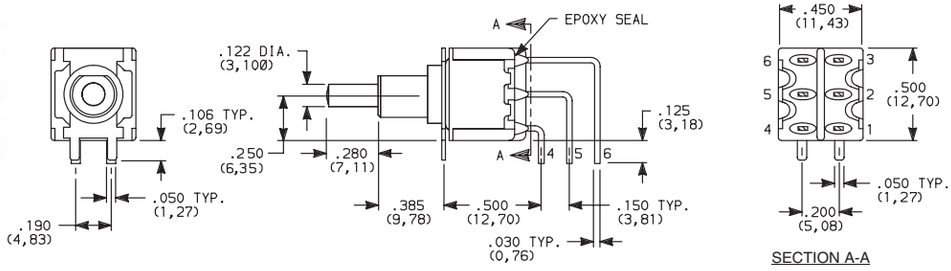

AV3 VERTICAL RIGHT ANGLE, SNAP-IN, PC THRU-HOLE, .150" PITCH

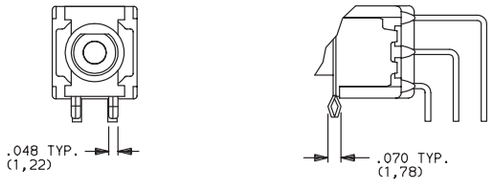

PC MOUNTING

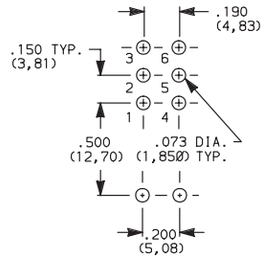

Not available with I seal.
Terminal bend radii and lead-in manufacturing option.

V6 VERTICAL MOUNT, V-BRACKET
V21 VERTICAL MOUNT, V-BRACKET, SNAP-IN

8161SH9__BE2
SPDT

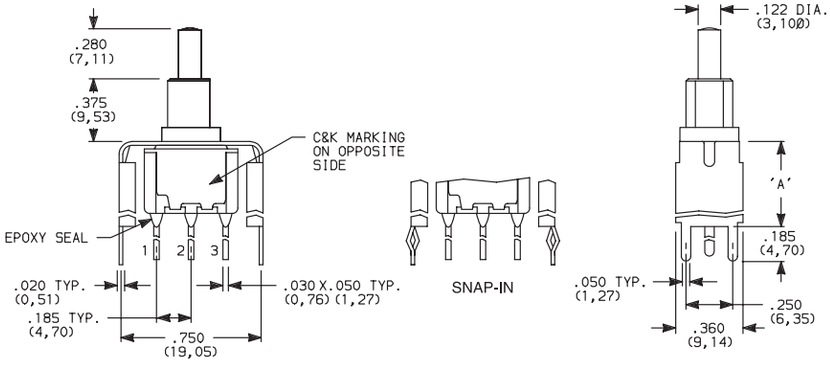

PC MOUNTING

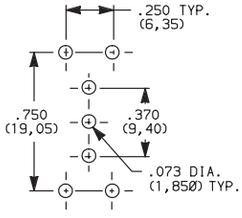

OPTION CODE	DIM 'A'
V21	.555 (14,10)
V6	.460 (11,68)

Not available with I seal.

V6 VERTICAL MOUNT, V-BRACKET
V21 VERTICAL MOUNT, V-BRACKET, SNAP-IN

8261SH9__BE2
DPDT

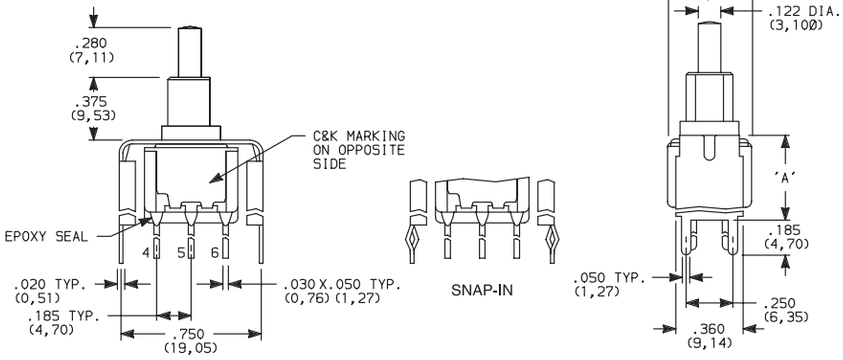

PC MOUNTING

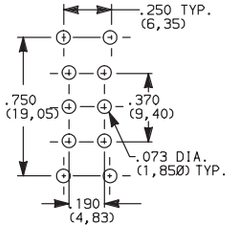

OPTION CODE	DIM 'A'
V21	.555 (14,10)
V6	.460 (11,68)

Not available with I seal.

Third Angle Projection

Dimensions are shown: Inches (mm)
Specifications and dimensions subject to change

TERMINATIONS

V3, V4 VERTICAL MOUNT, V-BRACKET

V31 VERTICAL MOUNT, V-BRACKET, SNAP-IN

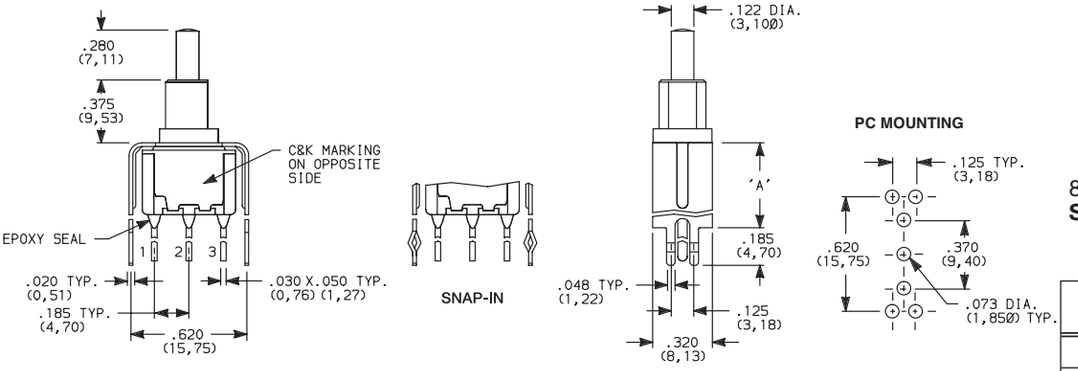

8161SH9__BE2
SPDT

OPTION CODE	DIM 'A'
V3, V31	.460 (11,68)
V4	.630 (16,00)

Not available with I seal.

V3, V4 VERTICAL MOUNT, V-BRACKET

V31 VERTICAL MOUNT, V-BRACKET, SNAP-IN

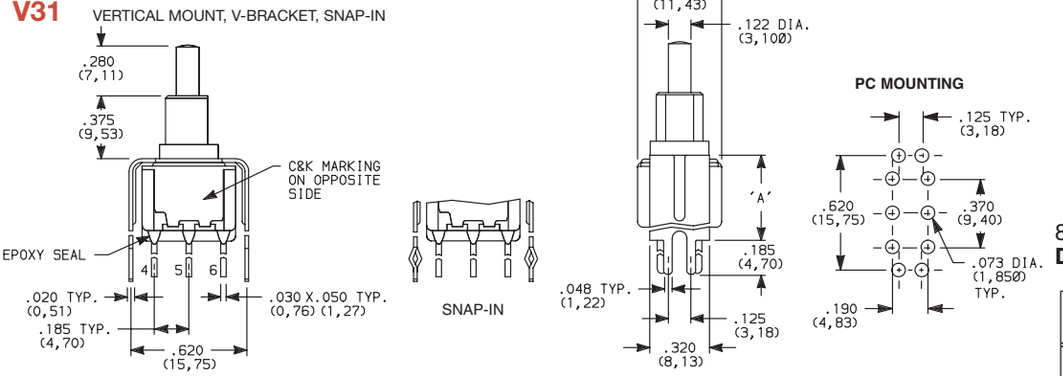

8261SH9__BE2
DPDT

OPTION CODE	DIM 'A'
V3, V31	.460 (11,68)
V4	.630 (16,00)

Not available with I seal.

CONTACT MATERIAL

OPTION CODE	CONTACT MATERIAL	TERMINAL PLATING	RATINGS	
B	GOLD [1]	GOLD [1]	LOW LEVEL/DRY CIRCUIT	0.4 VA MAX. @ 20 V AC OR DC MAX.
P		MATTE-TIN [6]		
Q	SILVER [4,5]	SILVER [5]	POWER	6 AMPS @ 120 V AC OR 28 V DC; 3 AMPS @ 250 V AC.
S		MATTE-TIN [6]		
G	GOLD OVER SILVER [2,3]	GOLD [3]	LOW LEVEL/DRY CIRCUIT OR POWER	0.4 VA MAX @ 20 V AC OR DC MAX. OR 6 AMPS @ 120 V AC OR 28 V DC; 3 AMPS @ 250 V AC.
R		MATTE-TIN [6]		

* Note: See Technical Data section of this catalog for RoHS compliant and compatible definitions and specifications.

[1] CONTACTS & TERMINALS: Copper alloy, with gold plate over nickel plate.

[2] END CONTACTS: Coin silver, with gold plate over nickel plate.

[3] CENTER CONTACTS & ALL TERMINALS: Copper alloy, with gold plate over nickel plate.

[4] END CONTACTS: Coin silver, silver plated.

[5] CENTER CONTACT & ALL TERMINALS: Copper alloy, silver plated.

[6] TERMINALS: Copper alloy, with matte-tin over nickel plate.

NOTE: Any models supplied with P, S, R,Q, B or G contact material are RoHS compliant.

All models c UL us with all options when ordered with S, R, G, or Q contact material.

B contact material standard with all terminations except C, Z & Z3.

Q contact material standard with C, Z & Z3 terminations.

P, S & R contact materials not available with Z & Z3 terminations.

Third Angle Projection

Dimensions are shown: Inches (mm)
Specifications and dimensions subject to change

8060 Series
Alternate Action and Momentary Pushbutton Switches

SEAL

E EPOXY SEAL

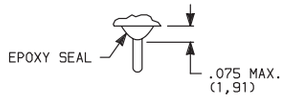

I EPOXY POTTED BASE

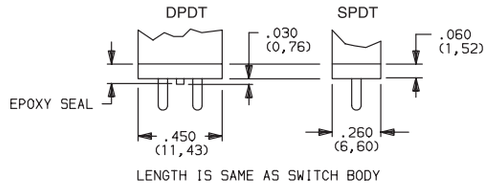

NOTE: Available with C, W, Z, Z3 terminations only.

AVAILABLE HARDWARE

Cap

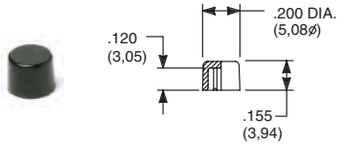

PART NO.

708901000	WHITE
708902000	BLACK
708903000	RED
708904000	ORANGE
708905000	YELLOW
708909000	GRAY

Material: Nylon
Finish: Gloss

Cap

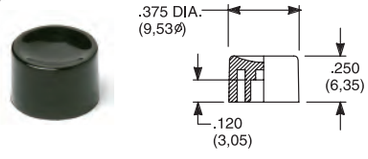

PART NO.

752701000	WHITE
752702000	BLACK
752703000	RED
752704000	ORANGE
752705000	YELLOW
752709000	GRAY

Material: Nylon
Finish: Gloss

Cap

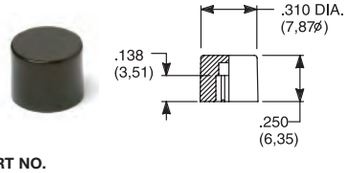

PART NO.

801801000	WHITE
801802000	BLACK
801803000	RED
801804000	ORANGE
801805000	YELLOW
801809000	GRAY

Material: Nylon
Finish: Gloss

Cap, Snap-fitting plunger

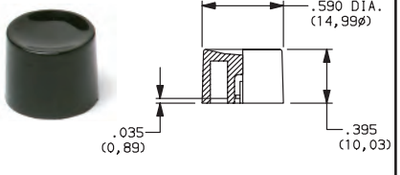

PART NO.

452D01000	WHITE
452D02000	BLACK
452D03000	RED
452D04000	ORANGE
452D05000	YELLOW
452D09000	GRAY

Material: Nylon
Finish: Gloss

Cap, Snap-fitting plunger

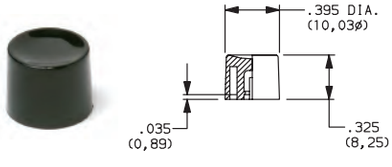

PART NO.

894101000	WHITE
894102000	BLACK
894103000	RED
894104000	ORANGE
894105000	YELLOW
894109000	GRAY

Material: Nylon
Finish: Gloss

Cap, J80, J81 & J82 options only

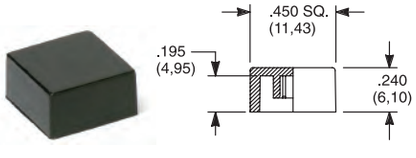

PART NO.

484601000	WHITE
484602000	BLACK
484603000	RED
484604000	ORANGE
484605000	YELLOW
484609000	GRAY

Material: Nylon
Finish: Gloss

PART NO.

798201000	WHITE
798202263	BLACK
798203000	RED
798204000	ORANGE
798205000	YELLOW
798209000	GRAY

Material: Nylon
Finish: Matte

Cap, J86 & J96 options only

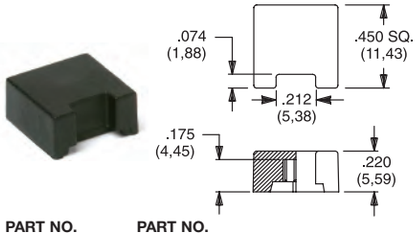

PART NO.

459701000	WHITE
459702000	BLACK
459703000	RED
459704000	ORANGE
459705000	YELLOW
459709000	GRAY

Material: Nylon
Finish: Gloss

PART NO.

476801000	WHITE
476802000	BLACK
476803000	RED
476804000	ORANGE
476805000	YELLOW
476809000	GRAY

Material: Nylon
Finish: Matte

Frame

PART NO.

615602263 BLACK

Material: Nylon
Finish: Matte

Frame

PART NO.

613302263 BLACK

Material: Nylon
Finish: Matte

NOTE: Additional nuts, locking rings and lockwashers available separately, see section "Technical Data and Additional Hardware".
Other cap & frame colors available, consult Customer Service Center.

Third Angle Projection

Dimensions are shown: Inches (mm)
Specifications and dimensions subject to change

AVAILABLE HARDWARE

Fits Z3 Termination female connector

PART NO.
530100000
Available in loose pieces.

Frames snap into panel opening and are independent from switch mounting. Accurate positioning of the PC mounted switch relative to the panel opening is necessary to provide proper clearance between actuator and frame. Available in two basic styles and four panel thicknesses .047-.125 in. Material: Nylon. Finish: Matte.

TYPICAL APPLICATION

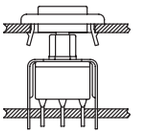

.047" (1,19) PANEL THK.	.062" (1,57) PANEL THK.	.090" (2,29) PANEL THK.	.125" (3,18) PANEL THK.
PART NO.	**PART NO.**	**PART NO.**	**PART NO.**
432502263	**432602263**	**432702263**	**432802263** BLACK

PANEL MOUNTING

For part numbers 4325xxxxx, 4326xxxxx

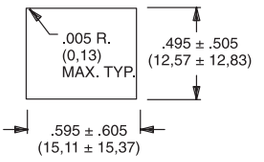

For part numbers 4327xxxxx, 4328xxxxx

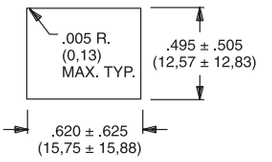

Panel Inserts

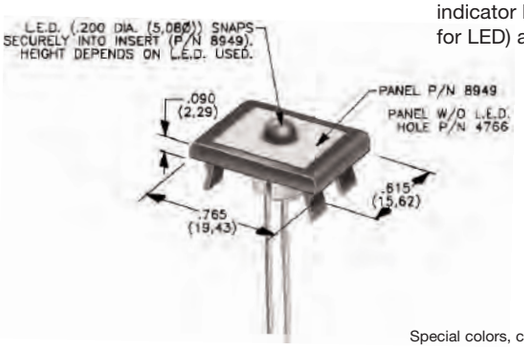

Above frames (part nos. 432XXXXXX) are also available with insert which accepts LED for indicator light assembly. Order insert separately from frame. Blank insert panel (without hole for LED) also available. **LED not included.**

PANEL INSERT WITH HOLE FOR LED	BLANK PANEL INSERT WITHOUT HOLE FOR LED
PART NO.	**PART NO.**
894902000	**476602000** BLACK

Special colors, custom markings available, consult Customer Service Center.

LED INFORMATION

SWITCHES WITH LED SUPPLIED: J86 OPTION:
Rectangular LEDs are supplied on 8060 Series pushbutton switches with J86 option. These LEDs are factory installed and are not replaceable. The following specifications apply:

OPTION CODE	COLOR	TYP. INTENSITY	TYP. FORWARD VOLTAGE	TYP. FORWARD CURRENT	MAX RATINGS AT 25°C AMBIENT TEMPERATURE		
					FORWARD VOLTAGE	CONTINUOUS FORWARD CURRENT	POWER DISSIPATION
6	Green	1.0 mcd	2.1 V	20 mA	2.5 V	50 mA	125 mW
3	Red*	0.5 mcd		10 mA		30 mA	75 mW
5	Yellow	4.0 mcd		20 mA		50 mA	125 mW

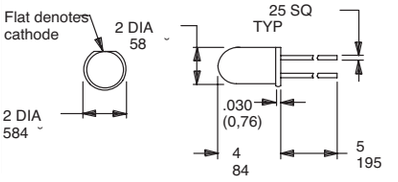

Suggested LED for J82 & J84 options
Dimensions for reference only

Process Information: Soldering to LED leads must be completed within 5 seconds at 500°F (260°C) maximum.
Caution: Circuit elements must limit forward current of LED to 50mA max. continuous.
* Extra-bright red LED available (typ. intensity 4.5 mcd), consult Customer Service Center.
LEDs are not supplied with J82 & J84 options. LED snaps into switch frame surrounding actuator and is wired externally.

Third Angle Projection

Dimensions are shown: Inches (mm)
Specifications and dimensions subject to change

8500 Series
Subminiature Pushbutton Switches

Features/Benefits

- *Pre-travel or over-travel models available*
- *Ratings up to 3 AMPS*
- *Reliable contact design*
- *RoHS compliant*

Typical Applications

- *Detection*
- *Telecommunications and networking equipment*
- *Computers and peripherals*

Models Available

Specifications

CONTACT RATING: Q contact material (853X Models): 1 AMP @ 120 V AC or 28 V DC; (855X Models): 3 AMPS @ 120 V AC or 28 V DC. See page A-65 for additional ratings.

ELECTRICAL LIFE:
853X MODELS: 250,000 actuations at full load.
855X MODELS: 10,000 actuations at full load.

CONTACT RESISTANCE: Below 30 mΩ typ. initial @ 2-4 V DC, 100 mA, for both silver and gold plated contacts.

INSULATION RESISTANCE: $10^9\Omega$ min.

DIELECTRIC STRENGTH: 1,000 Vrms min. @ sea level.

OPERATING TEMPERATURE: –30°C to 65°C.

TORQUE SPECS: T, T1 15/32" bushings - 50 in. lbs max. All other 1/4 -40 bushing types 12 in. lbs max.

Materials

CASE: Glass filled phenolic or diallyl phthalate (DAP) (UL 94V-0).

PLUNGER: Phenolic or glass filled polyester, black standard(UL94V-0).

CAP & FRAME: Nylon, black, standard.

BUSHING: Brass, nickel plated.

CONTACTS: Q contact material: Coin silver, silver plated. See page A-65 for additional contact materials.

TERMINALS: Q contact material: Copper alloy, silver plated. See page A-65 for additional contact materials.

TERMINAL SEAL: Epoxy.

HARDWARE: Nut: Brass, nickel plated; Lockwasher: Steel, bright nickel plated.

NOTE: Any models supplied with Q, B or G contact material are RoHS compliant.

NOTE: Specifications and materials listed above are for switches with standard options. For information on specific and custom switches, consult Customer Service Center.

Build-A-Switch

To order, simply select desired option from each category and place in the appropriate box. Available options are shown and described on pages A-63 thru A-66. For additional options not shown in catalog, consult Customer Service Center. All models have epoxy terminal seal and are compatible with all "bottom-wash" PCB cleaning methods.

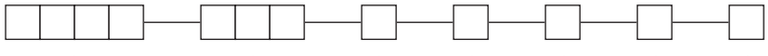

Switch Function
- **8531** SPST Off-Mom. 1 Amp
- **8532** SPST Off-Mom. 1 Amp
- **8533** SPST On-Mom. 1 Amp
- **8534** SPST On-Mom. 1 Amp
- **8551** SPST Off-Mom. 3 Amps
- **8552** SPST Off-Mom. 3 Amps

Actuator or Plunger
- **M** .150" high
- **J81** Snap-in with frame
- **J82** Snap-in with frame for LED
- **S** .210" high
- **T** 15/32 bushing
- **T1** 15/32 bushing with frame (8532 and 8534 only)

Terminations
- **Z** Solder lug
- **AV*** Right angle, PC thru-hole
- **C** PC Thru-hole

Contact Material
- **Q** Silver
- **B** Gold
- **G** Gold over silver

Seal
- **E** Epoxy
- **D** No epoxy seal

Cap or Plunger Color
- **2** Black
- **1** White
- **3** Red
- **9** Gray

Frame Color
- **2** Black
- **NONE** Models without frame

* Available with M or S plunger models, and B contact material only.

Dimensions are shown: Inches (mm)
Specifications and dimensions subject to change

SWITCH FUNCTION

NO. POLES	MODEL NO.	RATING	SWITCH FUNCTION POS. 1	SWITCH FUNCTION POS. 2	TOTAL TRAVEL	ACTUATION FORCE	SCHEMATIC
SP	8531	1 AMP	OFF	MOM.	.095 (2,41) TYP. with overtravel .042 (1,07) TYP.	7.7 oz (220g) TYP.	N.O. with overtravel
	8551	3 AMPS					

SPST

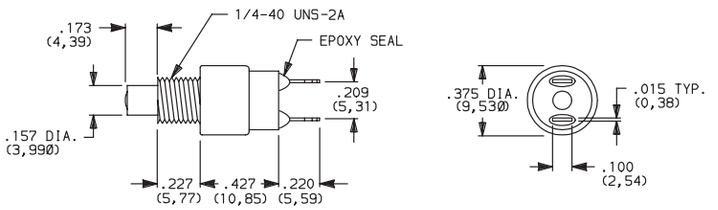

Part number shown: 8531MZQE2

NO. POLES	MODEL NO.	RATING	SWITCH FUNCTION POS. 1	SWITCH FUNCTION POS. 2	TOTAL TRAVEL	ACTUATION FORCE	SCHEMATIC
SP	8532	1 AMP	OFF	MOM.	.050 (1,27) TYP.	6 oz (170g) TYP.	N.O.
	8552	3 AMPS					

SPST

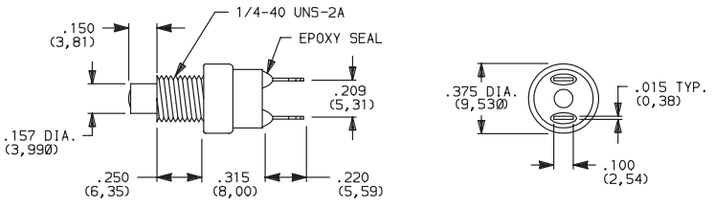

Part number shown: 8532MZQE2

NO. POLES	MODEL NO.	RATING	SWITCH FUNCTION POS. 1	SWITCH FUNCTION POS. 2	TOTAL TRAVEL	ACTUATION FORCE	SCHEMATIC
SP	8533	1 AMP	ON	MOM.	.080 (2,03) TYP. with pretravel .057 (1,45) TYP.	11.5 oz (456 g) TYP.	N.C. with pretravel
	8534	1 AMP	ON	MOM.	.032 (0,81) TYP. with overtravel .028 (0,71) TYP.	10.3 oz (282g) TYP.	N.C. with overtravel

SPST

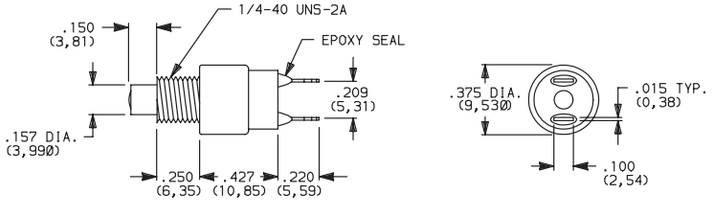

Part number shown: 8533MZQE2

MOM. = Momentary

All models with all options when ordered with G or Q contact material.

Third Angle Projection

Dimensions are shown: Inches (mm)
Specifications and dimensions subject to change

8500 Series
Subminiature Pushbutton Switches

PLUNGER

M .150" HIGH PLUNGER

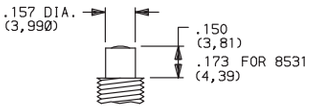

S .210" HIGH PLUNGER

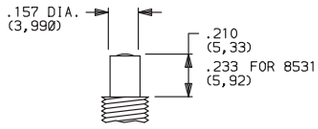

PANEL MOUNTING

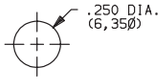

OPTION CODE	PLUNGER COLOR
2	BLACK
3	RED

NOTE: One mounting nut and lockwasher supplied with all actuators (except T actuator: two nuts supplied).

ACTUATOR

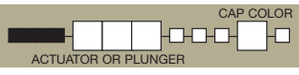

T 15/32 BUSHING

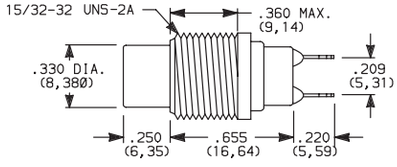

NOTE: No frame color choice required.

T1 15/32 BUSHING WITH FRAME

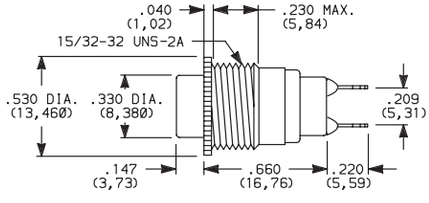

NOTE: No frame color choice required.
Available with 8532 and 8534 models only.

PANEL MOUNTING

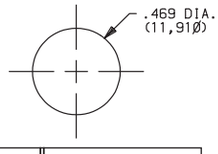

OPTION CODE	CAP COLOR
2	BLACK
1	WHITE
3	RED
9	GRAY

Cap Finish: gloss. Other colors available, consult Customer Service Center.

One mounting nut and lockwasher supplied with all actuators (except T actuator: two nuts supplied).

NOTE: Caps available for plunger options, see page A-65.

ACTUATOR—SNAP-IN FRONT MOUNT

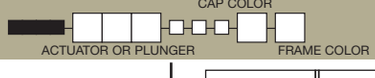

J81 SNAP-IN WITH FRAME

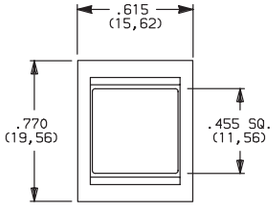

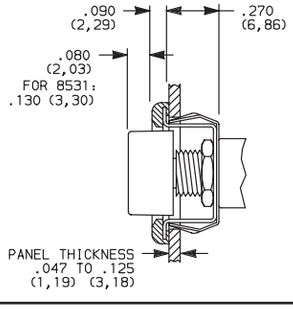

OPTION CODE	CAP AND FRAME COLOR
2	BLACK

Cap and Frame Finish: matte.
Other colors available,
consult Customer Service Center.

One mounting nut and lockwasher supplied with all actuators.

NOTE: Caps & frames available separately, see pages A-65 and A-66.

PANEL MOUNTING

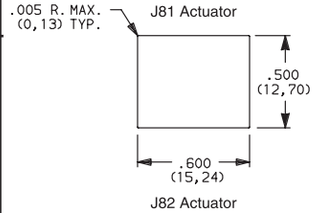

J82 SNAP-IN WITH FRAME FOR LED

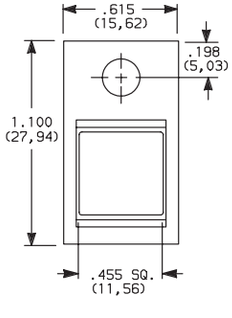

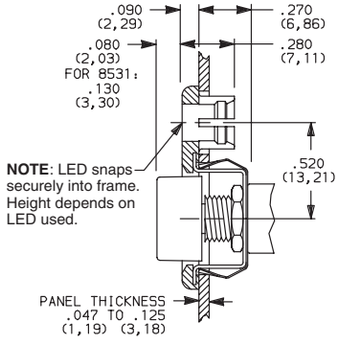

NOTE: LED snaps securely into frame. Height depends on LED used.

LED not included.
For LED information, see page A-66.

J82 Actuator

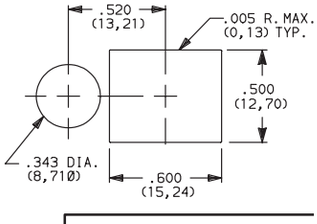

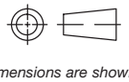
Third Angle Projection

Dimensions are shown: Inches (mm)
Specifications and dimensions subject to change

TERMINATIONS

Z SOLDER LUG

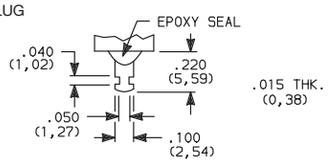

C PC THRU-HOLE

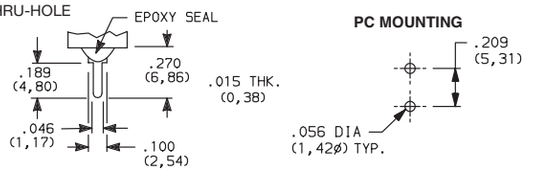

AV RIGHT ANGLE, PC THRU-HOLE

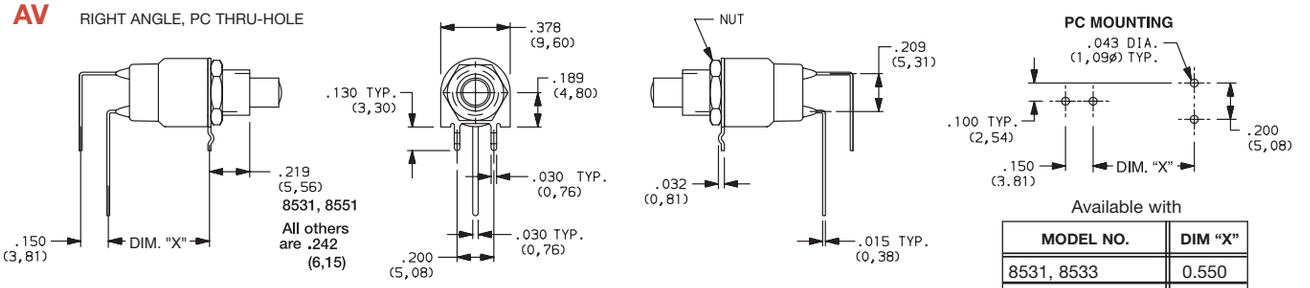

NOTE: Available with M or S plunger models, and B contact material only.

Available with

MODEL NO.	DIM "X"
8531, 8533	0.550
8532, 8534	0.438

CONTACT MATERIAL

OPTION CODE	RoHS COMPLIANT *	RoHS COMPATIBLE *	TERMINAL PLATING	CONTACT MATERIAL	RATINGS	
B	YES	YES	GOLD [1]	GOLD	LOW LEVEL/DRY CIRCUIT	0.4 VA MAX. @ 20 V AC OR DC MAX.
Q	YES	YES	SILVER [4]	SILVER [5]	POWER	853X MODELS: 1 AMP @ 120 V AC OR 28 V DC. 855X MODELS: 3 AMPS @ 120 V AC OR 28 V DC.
G	YES	YES	GOLD OVER SILVER [2]	GOLD [3]	LOW LEVEL/DRY CIRCUIT OR POWER	0.4 V MAX @20 V AC OR DC MAX. OR 853X MODELS: 1 AMP @ 120 V AC OR 28 V DC. 855X MODELS: 3 AMPS @120 V AC OR 28 V DC.

* Note: See Technical Data section of this catalog for RoHS compliant and compatible definitions and specifications.

[1] CONTACTS & TERMINALS: Copper alloy, with gold plate over nickel plate.
[2] CONTACTS: Coin silver, with gold plate over nickel plate.
[3] TERMINALS: Copper alloy, with gold plate over nickel plate.
[4] CONTACTS: Coin silver, silver plated.
[5] TERMINALS: Copper alloy, silver plated.

NOTE: Any models supplied with Q, B or G contact material are RoHS compliant.

All models ®ᴿᵁ with all options when ordered with G or Q contact material.

Q contact material standard with C, Z terminations.

8551 & 8552 available with Q contact material only.

SEAL

E EPOXY SEAL

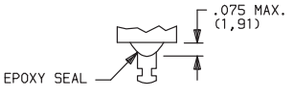

REPLACEMENT HARDWARE

Cap for 0.157" dia. plungers

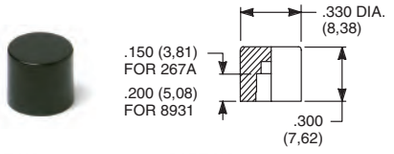

PART NO.		PART NO.	
267A01000	WHITE	893101000	WHITE
267A02000	BLACK	893102000	BLACK
267A03000	RED	893103000	RED
267A09000	GRAY	893109000	GRAY
85X2T, 8534T models only		85X1T, 8532T1, 8533T, 8534T1 models only	
Material: Nylon Finish: Gloss		Material: Nylon Finish: Gloss	

Cap, J80, J81 & J 82 options only

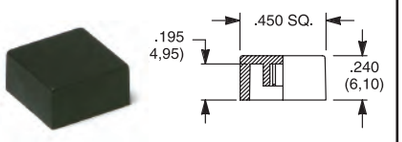

PART NO.

448901000 WHITE
448902000 BLACK
448903000 RED
448909000 GRAY

Material: Nylon
Finish: Gloss or matte

Frame

PART NO.

613302263 BLACK

Material: Nylon
Finish: Matte

Other colors available, consult Customer Service Center.

Third Angle Projection

Dimensions are shown: Inches (mm)
Specifications and dimensions subject to change

8500 Series
Subminiature Pushbutton Switches

AVAILABLE HARDWARE

Frame

PART NO.
615602263 BLACK

Material: Nylon
Finish: Matte

NOTE: Additional nuts, locking rings and lockwashers available separately, see section "Technical Data and Additional Hardware".
Other colors available, consult Customer Service Center.

Frames snap into panel opening and are independent from switch mounting. Accurate positioning of the PC mounted switch relative to the panel opening is necessary to provide proper clearance between actuator and frame. Available in two basic styles and four panel thicknesses .047-.125 in. Material: Nylon. Finish: Matte.

TYPICAL APPLICATION

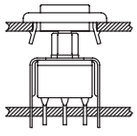

.047" (1,19) PANEL THK.	.062" (1,57) PANEL THK.	.090" (2,29) PANEL THK.	.125" (3,18) PANEL THK.
PART NO.	**PART NO.**	**PART NO.**	**PART NO.**
432502263	432602263	432702263	432802263 BLACK

PANEL MOUNTING

For part numbers
4325xxxxx, 4326xxxxx

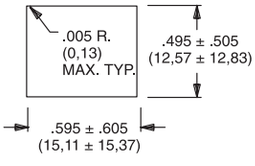

For part numbers
4327xxxxx, 4328xxxxx

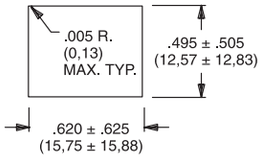

Panel Inserts

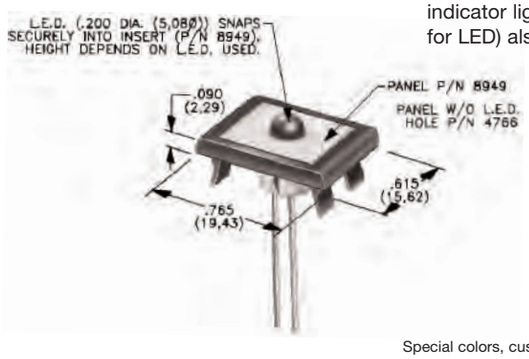

Above frames (part nos. 432XXXXXX) are also available with insert which accepts LED for indicator light assembly. Order insert separately from frame. Blank insert panel (without hole for LED) also available. **LED not included.**

PANEL INSERT WITH HOLE FOR LED	BLANK PANEL INSERT WITHOUT HOLE FOR LED
PART NO.	**PART NO.**
894902000	476602000 BLACK

Special colors, custom markings available, consult Customer Service Center.

LED INFORMATION

Process Information: Soldering to LED leads must be completed within 5 seconds at 500°F (260°C) maximum.
LEDs are not supplied with J82 option. LED snaps into switch frame surrounding actuator and is wired externally.

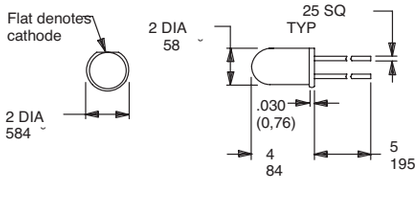

Suggested LED for J82 option
Dimensions for reference only

Third Angle Projection

Dimensions are shown: Inches (mm)
Specifications and dimensions subject to change

KM Series
Subminiature Pushbutton Switches

Features/Benefits

- ***Reliable contact design***
- ***Available with pretravel and overtravel***
- ***RoHS compliant***

Typical Applications

- ***Alarm systems***
- ***Computers***
- ***Detector switch application***

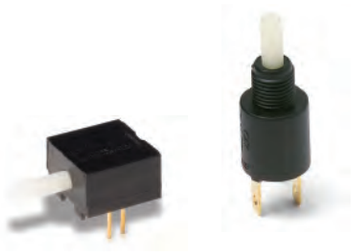

Models Available

Specifications

CONTACT RATING: Q contact material (KM11, KM12 Models): 0.25 AMPS @ 125 V AC or DC (UL); (KM33 Model): 1 AMP @ 125 V AC or 28 V DC. See page A-69 for additional ratings.

ELECTRICAL LIFE: 10,000 actuations min. at full load.

CONTACT RESISTANCE: Below 30 mΩ typ. initial @ 2-4 V DC, 100 mA, for both silver and gold plated contacts.

INSULATION RESISTANCE: $10^9\Omega$ min.

DIELECTRIC STRENGTH: 1,000 Vrms min. @ sea level.

OPERATING TEMPERATURE: –30°C to 85°C.

CAP INSTALLATION FORCE: 10 lbs. max. permissible.

NOTE: Any models supplied with Q or B contact material are RoHS compliant.

NOTE: Specifications and materials listed above are for switches with standard options. For information on specific and custom switches, consult Customer Service Center.

Materials

HOUSING & BUSHING: 6/6 nylon (UL94V-2), black.

ACTUATOR: 6/6 nylon (UL 94V-2), natural. Internal o-ring seal, available on KM11 & KM33 models.

MOVABLE CONTACT: B contact material: Bronze or copper, with gold plate over nickel plate. See page A-69 for additional contact materials.

STATIONARY CONTACTS & TERMINALS: B contact material: Copper, with gold plate over nickel plate. See page A-69 for additional contact materials.

RETURN SPRING: Music wire, phosphor coated.

MOUNTING NUT: Brass, nickel plated.

TERMINAL SEAL: Epoxy.

Build-A-Switch

To order, simply select desired option from each category and place in the appropriate box. Available options are shown and described on pages A-68 and A-70. For additional options not shown in catalog, consult Customer Service Center.

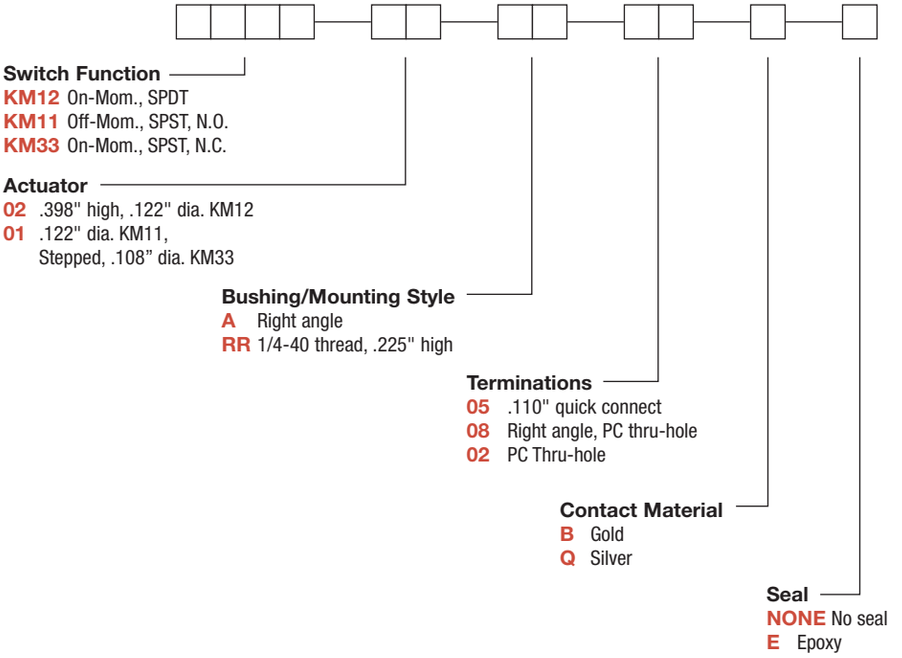

KM Series
Subminiature Pushbutton Switches

SWITCH FUNCTION

NO. POLES	MODEL NO.	SWITCH FUNCTION POS. 1	SWITCH FUNCTION POS. 2	CONNECTED TERMINALS POS. 1	CONNECTED TERMINALS POS. 2	SCHEMATIC
SP	KM11	OFF	MOM.	OPEN	2-1	SPST N.O.
	KM33	ON	MOM.	2-1	OPEN	SPST N.C.

SPST

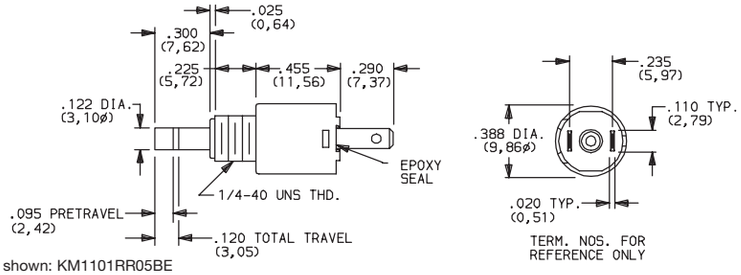

Part number shown: KM1101RR05BE

SP	KM12	ON	MOM.	2-1	4-3	SPDT

SPDT

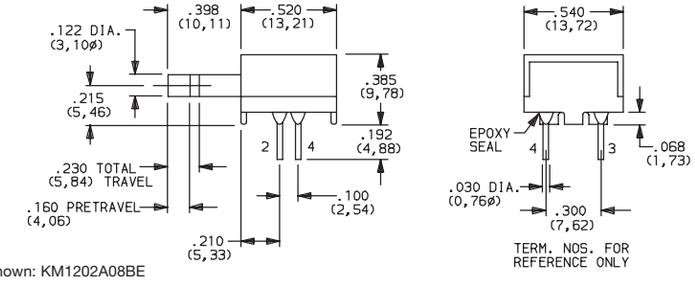

Part number shown: KM1202A08BE

ACTUATOR

02 .398" HIGH, .122" DIA.

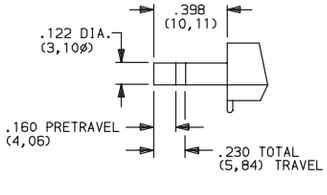

KM12 models only.

01 .122" DIA.

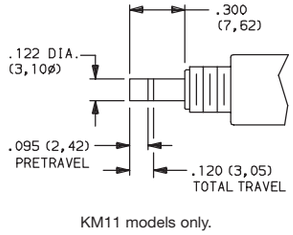

KM11 models only.

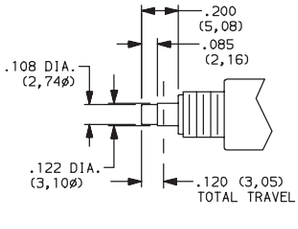

KM33 models only.

NOTE: Caps available for plunger options, see page A-70.

Third Angle Projection

Dimensions are shown: Inches (mm)
Specifications and dimensions subject to change

BUSHING/ MOUNTING STYLE

A RIGHT ANGLE

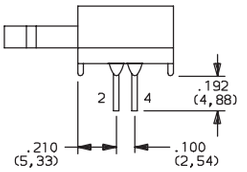

KM12 models only.

RR 1/4-40 THREAD, .225" HIGH

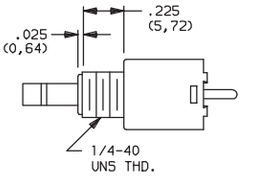

KM11 & KM33 models only.

PANEL MOUNTING

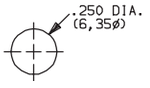

KM11 & KM33 models.

PC MOUNTING

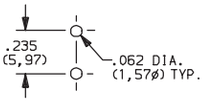

KM11 models only.

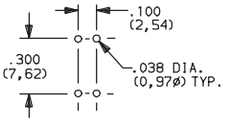

KM12 models only.

TERMINATIONS

05 .110" QUICK CONNECT

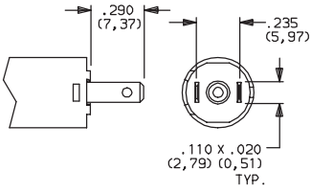

08 RIGHT ANGLE, PC THRU-HOLE

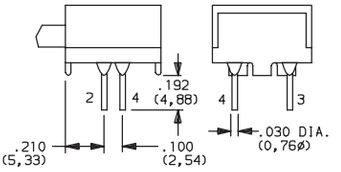

KM12 models only.

02 PC THRU-HOLE

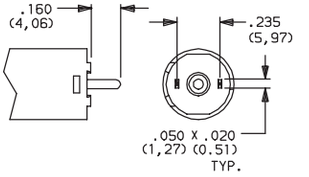

KM11 models only.

CONTACT MATERIAL

OPTION CODE	RoHS COMPLIANT *	RoHS COMPATIBLE *	CONTACT AND TERMINAL MATERIAL	RATINGS	
B	YES	YES	GOLD [1]	LOW LEVEL/DRY CIRCUIT	0.4 VA MAX. @ 20 V AC OR DC MAX.
Q	YES	YES	SILVER [2]	POWER	0.25 AMPS @ 125 V AC OR DC (KM11, KM12) (UL) 1 AMP @ 125 V AC OR 28 V DC (KM33).

* Note: See Technical Data section of this catalog for RoHS compliant and compatible definitions and specifications.

[1] STATIONARY CONTACTS & TERMINALS: Copper, with gold plate over nickel plate.
MOVABLE CONTACT: Phosphor bronze or beryllium copper, with gold plate over nickel plate.

[2] STATIONARY CONTACTS & TERMINALS: Copper, silver plated (standard with all termination options).
MOVABLE CONTACT: Phosphor bronze or beryllium copper, silver plated.

[3] STATIONARY CONTACTS & TERMINALS: Copper, with gold plate over nickel plate over silver plate.
MOVABLE CONTACT: Phosphor bronze or beryllium copper, with gold plate over nickel plate over silver plate.

NOTE: Any models supplied with Q or B contact material are RoHS compliant.

KM11, KM12 models ® when ordered with 'Q' contact material.

SEAL

NONE NO SEAL

E EPOXY SEAL

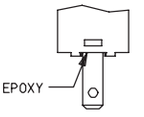

Third Angle Projection

Dimensions are shown: Inches (mm)
Specifications and dimensions subject to change

KM Series
Subminiature Pushbutton Switches

AVAILABLE HARDWARE

Cap, KM33 models

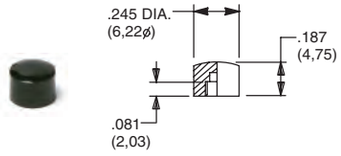

PART NO.

785101000 WHITE
785102000 BLACK
785103000 RED

Material: Nylon
Finish: Gloss

Cap, KM11 and KM12 models

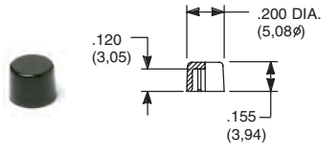

PART NO.

708901000 WHITE
708902000 BLACK
708903000 RED

Material: Nylon
Finish: Gloss

Cap, KM11 and KM12 models

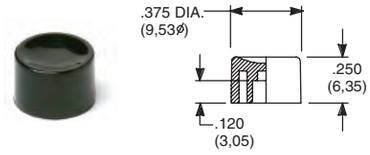

PART NO.

752701000 WHITE
752702000 BLACK
752703000 RED

Material: Nylon
Finish: Gloss

Cap, KM11 and KM12 models

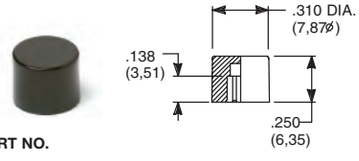

PART NO.

801801000 WHITE
801802000 BLACK
801803000 RED

Material: Nylon
Finish: Gloss

Cap, KM11 models

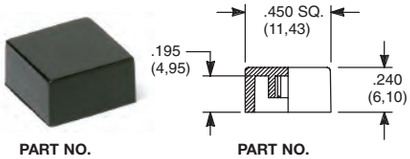

PART NO.

484601000 WHITE
484602000 BLACK
484603000 RED

Material: Nylon
Finish: Gloss

PART NO.

798201000 WHITE
798202263 BLACK
798203000 RED

Material: Nylon
Finish: Matte

NOTE: Other cap colors available, consult Customer Service Center.

Third Angle Projection

Dimensions are shown: Inches (mm)
Specifications and dimensions subject to change

8600 Series
Microminiature Pushbutton Switches

Features/Benefits

- ***Available with overtravel***
- ***Normally closed models available***
- ***Microminiature size ideal for applications where space is limited***
- ***RoHS compliant***

Typical Applications

- ***Detection***
- ***Telecommunications and networking equipment***
- ***Computers and peripherals***

Models Available

Specifications

CONTACT RATING: Q contact material (8631, 8632 Models): 500 mA @ 120 V AC or 28 V DC; 250 mA @ 250 V AC; (8633 Model): 250 mA @ 120 V AC or 28 V DC; 125 mA @ 250 V AC. See page A-73 for additional ratings.

ELECTRICAL LIFE:
8631 and 8633 MODELS: 250,000 actuations at full load.
8632 MODEL: 100,000 actuations at full load.

CONTACT RESISTANCE: Below 30 mΩ typ. initial @ 2-4 V DC, 100 mA, for both silver and gold plated contacts.

INSULATION RESISTANCE: 109 Ω min.

DIELECTRIC STRENGTH: 500 Vrms min. @ sea level.

OPERATING TEMPERATURE: –30°C to 65°C.

SOLDERABILITY: Per MIL-STD-202F method 208D, or EIA RS-186E method 9.

Materials

CASE: Glass filled phenolic or diallyl phthalate (DAP), (UL94V-0).

PLUNGER: Glass filled nylon (UL94V-0), black standard.

BUSHING: Brass, nickel plated.

CONTACTS: Q contact material: Coin silver, silver plated. See page A-73 for additional contact materials.

TERMINALS:
8631, 8632 MODELS: Copper alloy, silver plated.
8633 MODEL: Q contact material: Coin silver.
See page A-73 for additional contact materials.

TERMINAL SEAL:
8633 MODEL: Epoxy.
8631, 8632 MODELS: Terminals insert molded.

HARDWARE: Nut: Brass, nickel plated.

NOTE: Any models supplied with Q, B or G contact material are RoHS compliant.

NOTE: Specifications and materials listed above are for switches with standard options. For information on specific and custom switches, consult Customer Service Center.

Build-A-Switch

To order, simply select desired option from each category and place in the appropriate box. Available options are shown and described on pages A-72 and A-73. For additional options not shown in catalog, consult Customer Service Center.

Switch Function
8631 SPST Off-Mom.
8632 SPST Off-Mom.
8633 SPST On-Mom.

Termination
Z Solder lug
C PC Thru-hole

Contact Material
B Gold
Q Silver
G Gold over silver

Seal
D No epoxy
E Epoxy

Plunger Color
2 Black
3 Red

8600 Series
Microminiature Pushbutton Switches

SWITCH FUNCTION

NO. POLES	MODEL NO.	SWITCH FUNCTION POS. 1	SWITCH FUNCTION POS. 2	TOTAL TRAVEL	ACTUATION FORCE	SCHEMATIC
SP	8631	OFF	MOM.	.040 (1,02) TYP.	5 oz (140g) TYP.	N.O.

SPST

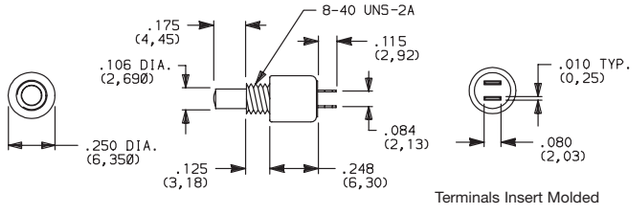

PANEL MOUNTING

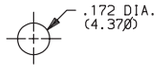

Part number shown: 8631ZQD2

Terminals Insert Molded

NO. POLES	MODEL NO.	SWITCH FUNCTION POS. 1	SWITCH FUNCTION POS. 2	TOTAL TRAVEL	ACTUATION FORCE	SCHEMATIC
SP	8632	OFF	MOM.	.106 (2,69) TYP. with overtravel .024 (0,61) TYP.	6.25 oz (177g) TYP.	N.O. with overtravel

SPST

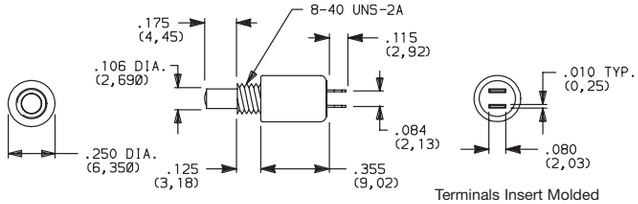

PANEL MOUNTING

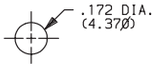

Part number shown: 8632ZQD2

Terminals Insert Molded

NO. POLES	MODEL NO.	SWITCH FUNCTION POS. 1	SWITCH FUNCTION POS. 2	TOTAL TRAVEL	ACTUATION FORCE	SCHEMATIC
SP	8633	ON	MOM.	.048 (1,22) TYP.	5 oz (140g) TYP.	N.C.

SPST

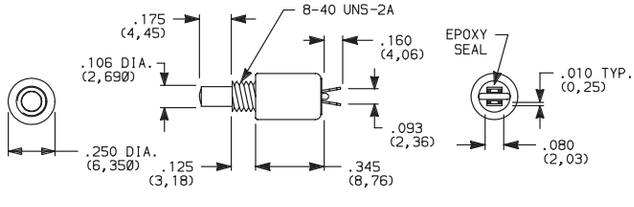

PANEL MOUNTING

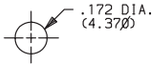

Part number shown: 8633ZQE2

MOM. = Momentary

NOTE: Caps available for plunger options, see page A-73.

TERMINATIONS

Z SOLDER LUG

8631, 8632 models only.

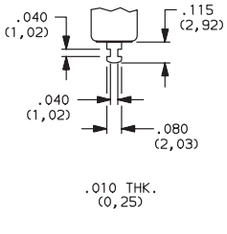

8633 models only.

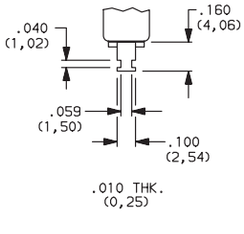

C PC THRU-HOLE

8631, 8632 models only.

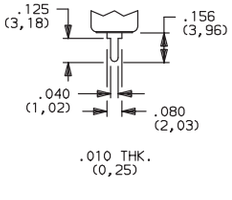

PC MOUNTING

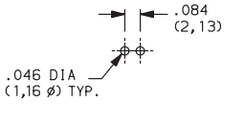

Third Angle Projection

Dimensions are shown: Inches (mm)
Specifications and dimensions subject to change

CONTACT MATERIAL

OPTION CODE	RoHS COMPLIANT *	RoHS COMPATIBLE *	CONTACT MATERIAL	TERMINAL PLATING	RATINGS	
B	YES	YES	GOLD [1]	GOLD [1]	LOW LEVEL/ DRY CIRCUIT	0.4 VA MAX. @ 20 V AC OR DC MAX.
Q	YES	YES	SILVER [4]	SILVER [5]	POWER	8631, 8632 MODELS: 500 mA @ 120 V AC OR 28 V DC; 250 mA @ 250 V AC. 8633 MODELS: 250 mA @ 120 V AC OR 28 V DC; 125 mA @ 250 V AC.
G	YES	YES	GOLD OVER SILVER [4]	GOLD [3]	LOW LEVEL/DRY CIRCUIT OR POWER	0.4 VA MAX @ 20 V AC OR DC MAX. OR 8631, 8632 MODELS: 500 mA @ 120 V AC OR 28 V DC; 250 mA @ 250 V AC. 8633 MODELS: 250 mA @ 120 V AC OR 28 V DC; 125 mA @ 250 V AC.

* Note: See Technical Data section of this catalog for RoHS compliant and compatible definitions and specifications.

[1] CONTACTS & TERMINALS: Copper alloy, with gold plate over nickel plate.
[2] CONTACTS: Coin silver, with gold plate over nickel plate.
[3] TERMINALS: Copper alloy, with gold plate over nickel plate.
8633 model only: Coin silver, with gold plate over nickel plate.
[4] CONTACTS: Coin silver, silver plated.
[5] TERMINALS: Copper alloy, silver plated. 8633 model only: coin silver.

NOTE: Any models supplied with Q, B or G contact material are RoHS compliant.

8631, 8632 models ® with all options when ordered with G or Q contact material.
Q contact material standard with C, Z terminations.

SEAL

D NO EPOXY SEAL

Not available on 8633 model.
Standard on 8631, 8632 models.

E EPOXY SEAL

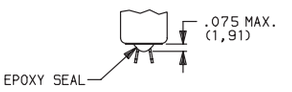

Not available on 8631, 8632 models.
Standard on 8633 model only.

PLUNGER COLOR

OPTION CODE	COLOR
2	BLACK
3	RED

AVAILABLE HARDWARE

Cap

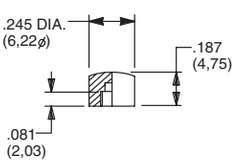

PART NO.

785101000 WHITE
785102000 BLACK
785103000 RED

Material: Nylon
Finish: Gloss

NOTE: Other cap colors available, consult Customer Service Center.

Third Angle Projection

Dimensions are shown: Inches (mm)
Specifications and dimensions subject to change

8700 Series
Overtravel Pushbutton Switches

Features/Benefits

- ***Extended pre-travel or over-travel***
- ***Heavy-duty brass plunger***
- ***Long electrical life — 100K cycles***
- ***RoHS compliant***

Typical Applications

- ***Telecommunications***
- ***High end Instrumentation***
- ***Medical & test equipment***
- ***Detection***

Specifications

CONTACT RATING: Q contact material: 1 AMP @ 120 V AC or 28 V DC. See page A-76 for additional ratings.

ELECTRICAL LIFE: 100,000 actuations at full load.

CONTACT RESISTANCE: Below 30 mΩ typ. Initial @ 2-4 V DC, 100 mA.

INSULATION RESISTANCE: $10^3\Omega$ min.

DIELECTRIC STRENGTH: 1,000 Vrms min. @ sea level.

OPERATING TEMPERATURE: –30°C to 65°C.

NOTE: Any models supplied with Q, or B contact material are RoHS compliant.

NOTE: Specifications and materials listed above are for switches with standard options. For information on specific and custom switches, consult Customer Service Center.

Materials

CASE: Diallyl phthalate (DAP) (UL 94V-0).

PLUNGER:
8731 – .390" brass, nickel plated.
8732 – .390" PBT polyester, black.

BUSHING: brass, nickel plated.

CONTACTS: Q contact material: Coin silver, silver plated. See page A-76 for additional contact materials.

TERMINALS: Q contact material: Copper alloy, silver plated. See page A-76 for additional contact materials.

TERMINAL SEAL: Epoxy.

HARDWARE: Nut: Brass, nickel plated; lockwasher: Steel, bright nickel plate. One mounting nut & lockwasher supplied with all switches.

Build-A-Switch

To order, simply select desired option from each category and place in the appropriate box. Available options are shown and described on pages A-75 and A-76. For additional options not shown in catalog, consult Customer Service Center. All models have epoxy terminal seal and are compatible with all “bottom-wash” PCB cleaning methods.

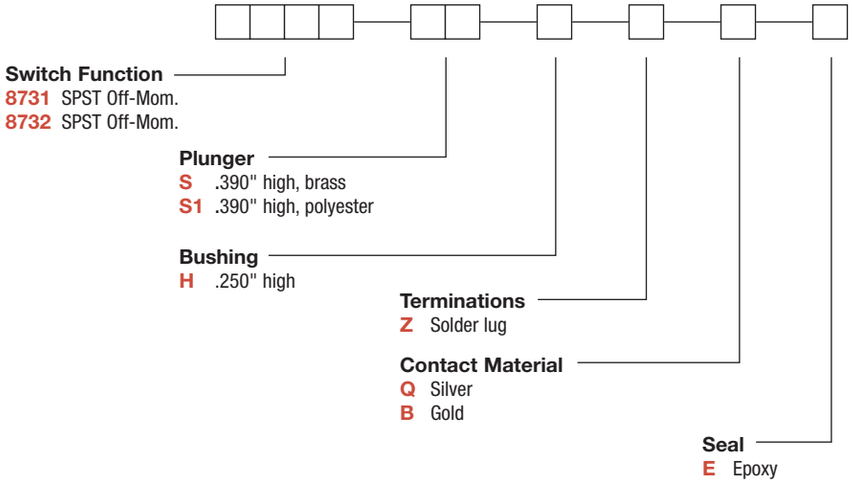

SWITCH FUNCTION

NO. POLES	MODEL NO.	SWITCH FUNCTION POS. 1	SWITCH FUNCTION POS. 2	TOTAL TRAVEL		ACTUATION FORCE	SCHEMATIC
SP	8731	OFF	MOM.	.390 (9,91) TYP.	with overtravel .311 TYP.	4.7 oz TYP.	N.O. with overtravel SPST

SPST

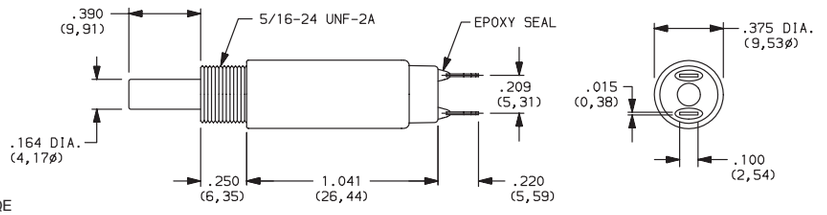

Part number shown: 8731SHZQE

SP	8732	OFF	MOM.	.390 (9,91) TYP.	with overtravel .350 TYP.	2.2 oz TYP.	N.O. with overtravel SPST

SPST

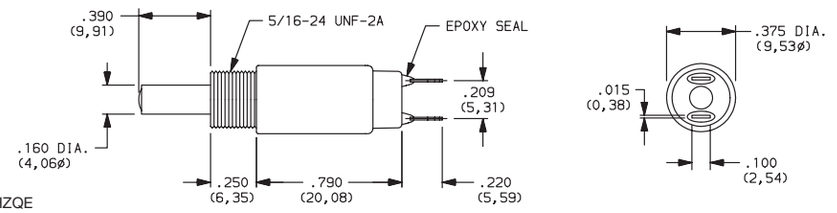

Part number shown: 8732S1HZQE

MOM. = Momentary

PLUNGER

S .390" HIGH, BRASS

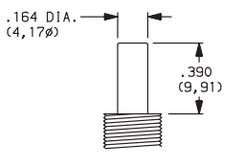

Available with 8731 model only.

S1 .390" HIGH, PBT POLYESTER

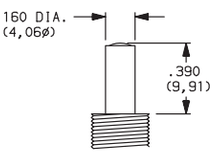

Available with 8732 model only.

BUSHING

H .250" HIGH

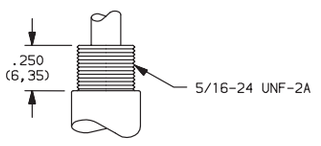

PANEL MOUNTING

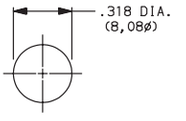

Third Angle Projection

Dimensions are shown: Inches (mm)
Specifications and dimensions subject to change

8700 Series
Overtravel Pushbutton Switches

TERMINATIONS

Z SOLDER LUG

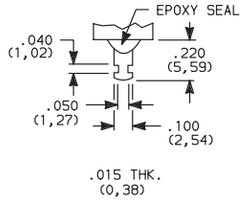

CONTACT MATERIAL

OPTION CODE	RoHS COMPLIANT *	RoHS COMPATIBLE *	CONTACT MATERIAL	TERMINAL PLATING	RATINGS	
Q	YES	YES	SILVER	SILVER	POWER	1 AMP @ 125 V AC OR 28 V DC.
B	YES	YES	GOLD	GOLD	LOW LEVEL/DRY CIRCUIT	0.4 VA MAX. @ 20 V AC OR DC MAX.

* Note: See Technical Data section of this catalog for RoHS compliant and compatible definition and specifications.

NOTE: Any models supplied with Q, or B contact material are RoHS compliant.

SEAL

E EPOXY SEAL

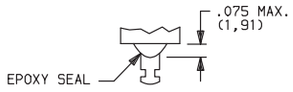

Third Angle Projection

Dimensions are shown: Inches (mm)
Specifications and dimensions subject to change

GP Series
Sealed Ultraminiature Pushbutton Switches

Features/Benefits

- ***Ultraminiature design saves space***
- ***Process compatible, withstands most soldering and washing processes***
- ***Thru-hole and surface mount models available***
- ***Sealed construction—internal o-ring and epoxy base***
- ***RoHS compliant***

Typical Applications

- ***Telecommunications and network equipment***
- ***Computers and peripheral products***
- ***Instrumentation***
- ***Medical Applications***

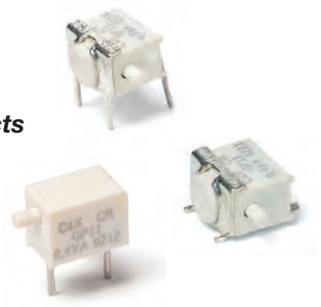

Specifications

CONTACT RATING: 0.4 VA max. @ 20 V AC or DC max.

MECHANICAL & ELECTRICAL LIFE: 40,000 make-and-break cycles at full load.

CONTACT RESISTANCE: Below 50 mΩ typ. initial @ 2-4 V DC, 100 mA.

INSULATION RESISTANCE: $10^9\Omega$ min.

DIELECTRIC STRENGTH: 500 Vrms min. @ sea level.

OPERATING TEMPERATURE: –40°C to 85°C.

SOLDERABILITY: Per MIL-STD-202F method 208D, or EIA RS-186E method 9 (1 hour steam aging).

DEGREE OF PROTECTION: IP57; Protection against harmful dust deposit, full-scale voltage protection, temporary immersion.

PACKAGING: Surface mount switches standard in anti-static tape and reel packaging per EIA 481-3, see page A-80 for drawings and reel information. Thru-Hole parts are shipped in trays.

All models are RoHS compliant and compliant.

Materials

HOUSING & BASE: Glass filled nylon 4/6, flame retardant, heat stabilized (UL 94V-0).

ACTUATOR: Glass filled nylon 4/6, flame retardant (UL 94V-0) with standard internal o-ring seal.

SWITCH SUPPORT: Brass, tin plated.

MOVABLE CONTACT: Copper alloy, with gold plate over nickel plate.

STATIONARY CONTACTS Copper alloy, with gold plate over nickel plate.

TERMINALS: Copper alloy, with gold flash over nickel plate.

TERMINAL SEAL: Epoxy/Urethane. All terminals insert molded.

NOTE: Any models supplied with B contact material are RoHS compliant and compatible.

NOTE: Materials listed above are general specifications. Specifications available for specific and custom switches, consult Customer Service Center.

CAUTION: PC mounting layouts and pads as shown are designed to be compatible with the latest equipment and reflow techniques. Care should be taken in the design and location of PC lands to suit individual needs. Orientation relative to reflow direction may significantly impact solder joint integrity.

How To Order

Complete part numbers for GP Series Sealed Ultraminiature Pushbutton Switches are shown on pages A-78 thru A-80.

PART NUMBER	SWITCH FUNCTION POS.1	SWITCH FUNCTION POS. 2	SCHEMATIC
GP11MCBE	OFF	MOM.	1 3 SPST
Conn. Terms.	OPEN	1-3	
GP12MCBE	ON	MOM.	2 (COMM) NC 1 3 NO SPDT
Conn. Terms.	2-1	2-3	

MOM. = Momentary

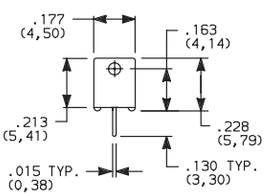

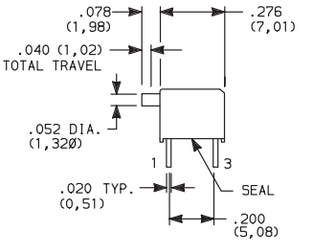

Terminal nos. for reference only.

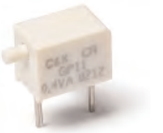

GP11MCBE
SPST

PC MOUNTING

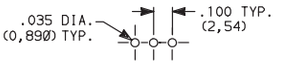

GP11– omit center hole.

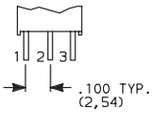

GP12 Model

Dimensions are shown: Inches (mm)
Specifications and dimensions subject to change

GP Series
Sealed Ultraminiature Pushbutton Switches

GP11MABE
SPST

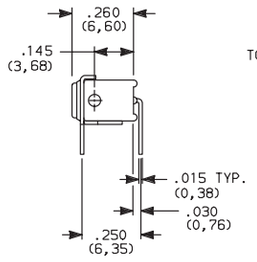

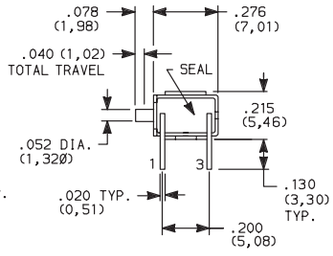

Terminal nos.
for reference only.

PC MOUNTING

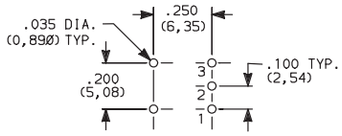

GP11– omit hole 2.

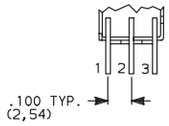

GP12 Model

PART NUMBER	SWITCH FUNCTION POS.1	SWITCH FUNCTION POS. 2	SCHEMATIC
GP11MABE	OFF	MOM.	SPST
Conn. Terms.	OPEN	1-3	
GP12MABE	ON	MOM.	SPDT
Conn. Terms.	2-1	2-3	

MOM. = Momentary

GP11MSABE
SPST

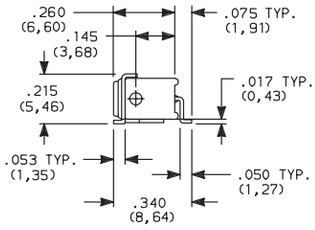

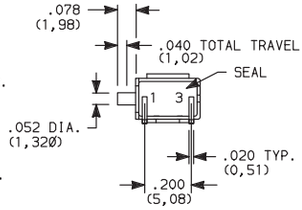

Terminal nos.
for reference only.

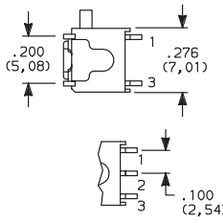

GP12 Model

PC MOUNTING

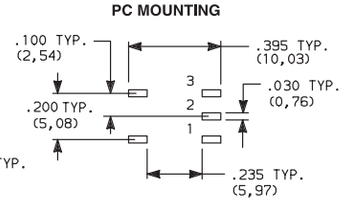

GP11– omit pad 2.

PART NUMBER	SWITCH FUNCTION POS.1	SWITCH FUNCTION POS. 2	SCHEMATIC
GP11MSABE	OFF	MOM.	SPST
Conn. Terms.	OPEN	1-3	
GP12MSABE	ON	MOM.	SPDT
Conn. Terms.	2-1	2-3	

MOM. = Momentary

GP11MSA1BE
SPST

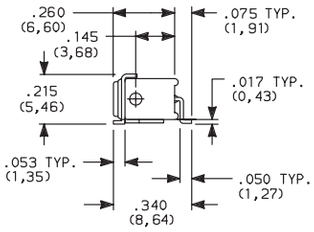

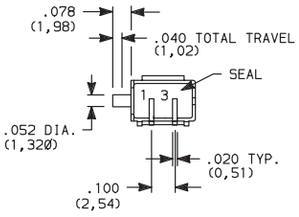

Terminal nos.
for reference only.

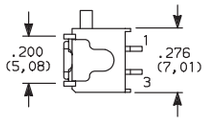

PC MOUNTING

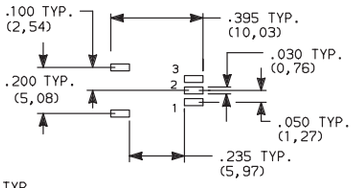

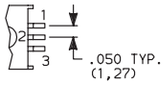

GP12 Model

GP11– omit pad 2.

PART NUMBER	SWITCH FUNCTION POS.1	SWITCH FUNCTION POS. 2	SCHEMATIC
GP11MSA1BE	OFF	MOM.	SPST
Conn. Terms.	OPEN	1-3	
GP12MSA1BE	ON	MOM.	SPDT
Conn. Terms.	2-1	2-3	

MOM. = Momentary

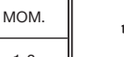

Third Angle
Projection

Dimensions are shown: Inches (mm)
Specifications and dimensions subject to change

PART NUMBER	SWITCH FUNCTION POS.1	SWITCH FUNCTION POS. 2	SCHEMATIC
GP12MSCBE	ON	MOM.	2 (COMM) NC 1 3 NO SPDT
Conn. Terms.	2-1	2-3	

MOM. = Momentary

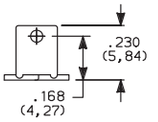

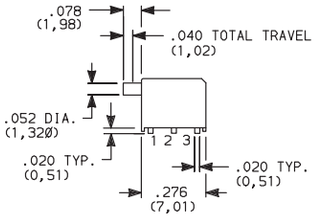

Terminal nos.
for reference only.

GP12MSCBE
SPDT

PC MOUNTING

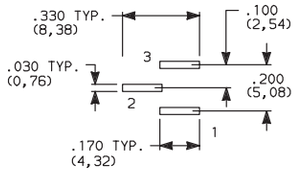

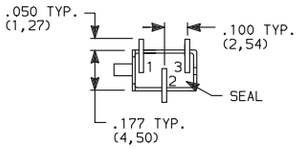

NOTE: Recommended for infrequent use applications only
For increased switch mounting strength, order, SV1 termination style with support bracket (see below).

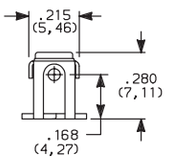

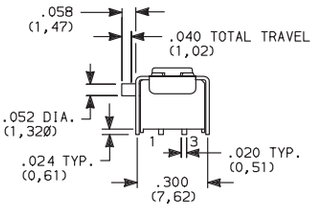

GP11MSV1BE
SPST

PART NUMBER	SWITCH FUNCTION POS.1	SWITCH FUNCTION POS. 2	SCHEMATIC
GP11MSV1BE	OFF	MOM.	1 3 SPST
Conn. Terms.	OPEN	1-3	
GP12MSV1BE	ON	MOM.	2 (COMM) NC 1 3 NO SPDT
Conn. Terms.	2-1	2-3	

MOM. = Momentary

PC MOUNTING
GP11 MODELS

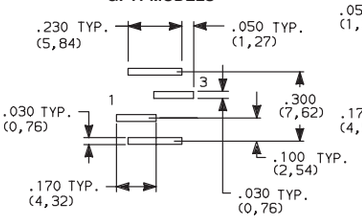

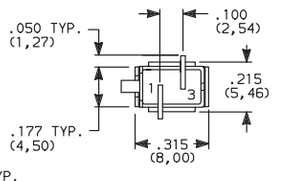

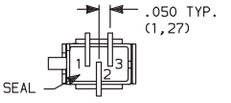

GP12 Model

Terminal nos.
for reference only.

PC MOUNTING
GP12 Models

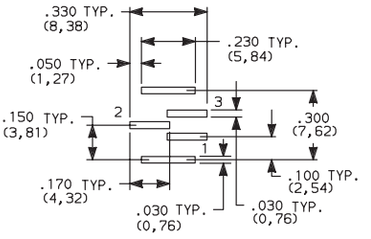

Third Angle
Projection

Dimensions are shown: Inches (mm)
Specifications and dimensions subject to change

GP Series
Sealed Ultraminiature Pushbutton Switches

TAPE & REEL

For part numbers GP11MSV1BE, GP12MSV1BE

REEL INFORMATION	
OUTSIDE DIAMETER	13.00 (330,0)
PILOT HOLE	.512 (13,0)
QUANTITY PER REEL	600

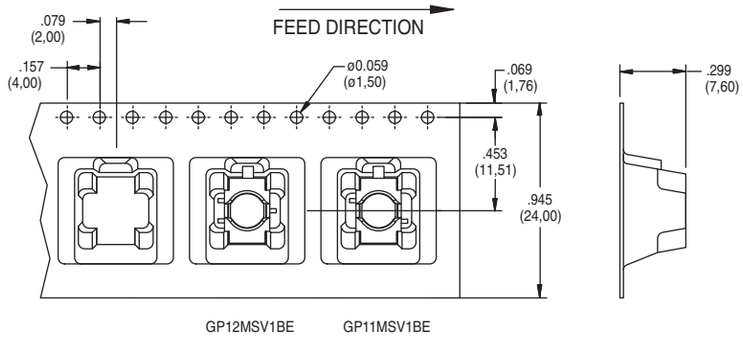

For part numbers GPXXSA1BE, GPXXMSABE

REEL INFORMATION	
OUTSIDE DIAMETER	13.00 (330,0)
PILOT HOLE	.512 (13,0)
QUANTITY PER REEL	600

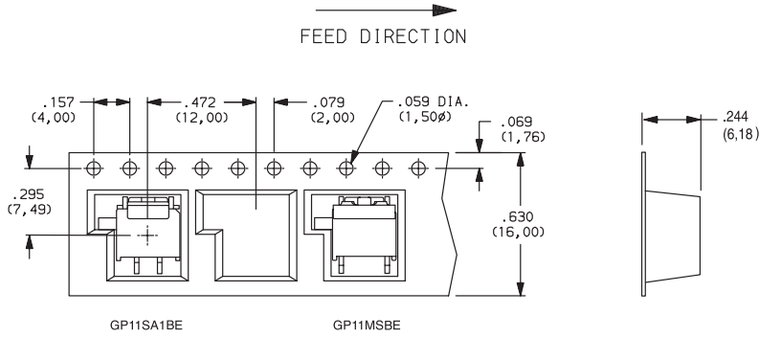

For part numbers GP12MSCBE

REEL INFORMATION	
OUTSIDE DIAMETER	13.00 (330,0)
PILOT HOLE	.512 (13,0)
QUANTITY PER REEL	600

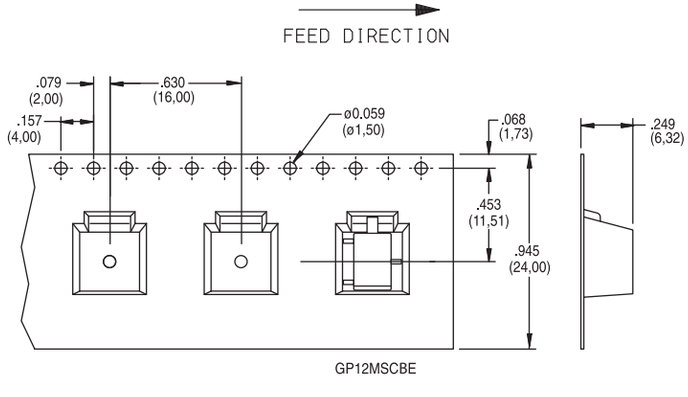

Third Angle Projection

Dimensions are shown: Inches (mm)
Specifications and dimensions subject to change

PN Series
Alternate & Momentary Action Pushbutton Switches

Features/Benefits

- ***Momentary or locking action***
- ***Different actuation forces for customized feel***
- ***Low cost, reliable contact design***
- ***Single and double pole options***
- ***RoHS compliant***

Typical Applications

- ***Computers and peripherals***
- ***Instrumentation and measurement equipment***
- ***Non-power, on-off switch applications***

Specifications

CONTACT RATING: 0.2 AMP @ 30 V DC max.
ELECTRICAL LIFE: 10,000 make-and-break cycles at full load.
MECHANICAL LIFE: 10,000 on/off cycles.
CONTACT RESISTANCE: 30 mΩ max. initial
INSULATION RESISTANCE: 100 MΩ min.
DIELECTRIC STRENGTH: 500 V AC min.
OPERATING/STORAGE TEMPERATURES: –10°C to 60°C.
PACKAGING: Switches are supplied in anti-static trays.

Materials

FRAME: Tin plated steel.
ACTUATOR: PA 66 black.
BASE: Phenolic resin.
TERMINALS: Silver plated brass.
MOVABLE CONTACTS: Silver plated phosphor bronze.
RETURN SPRING: SWC
DETENT SPRING: Phosphor bronze.
DETENT SPRING PLATE: Phosphor bronze.
RETURN SPRING RETAINER RING: Nickel plated steel.
TERMINAL SEAL: Epoxy.

Build-A-Switch

To order, simply select desired option from each category and place in the appropriate box. For additional options not shown in catalog, consult Customer Service Center.

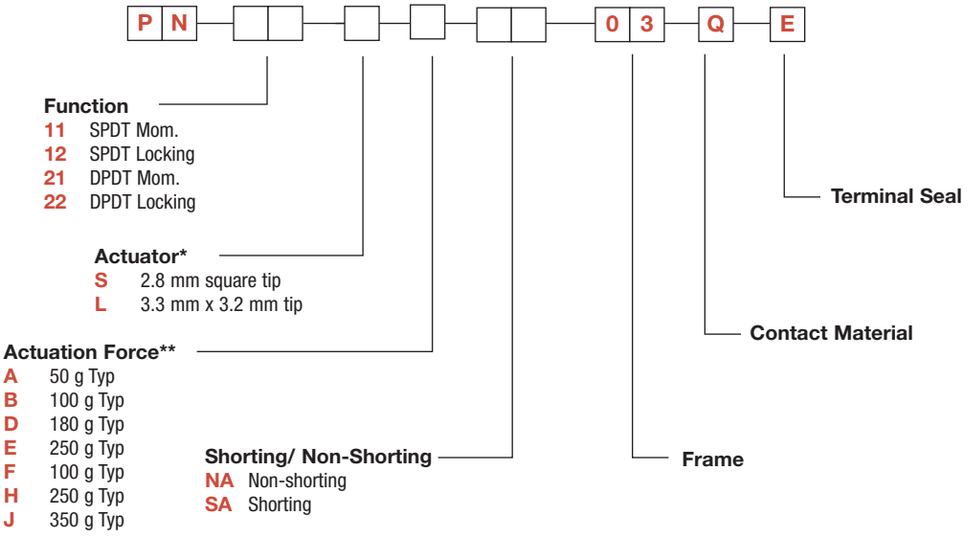

* Note - The switch body style dimenions differ for each of these 3 groupings

"S" actuator available for PN 11 & PN 12 options

"S" actuator available for PN 21 & PN 22 options

"L" actuator available for PN 21 & PN 22 options

** Actuation Force "A" only available with PN11 with "S" actuator

PN 11 & PN 21 available with Acuation Force "B", "D", "E", "F", "H", "J"

PN 12 & PN 22 available with Actuation Force "D", "E", "H", "J"

Full travel

PN Series
Alternate & Momentary Action Pushbutton Switches

PN 11 SPDT Mom.
PN 12 SPDT Locking

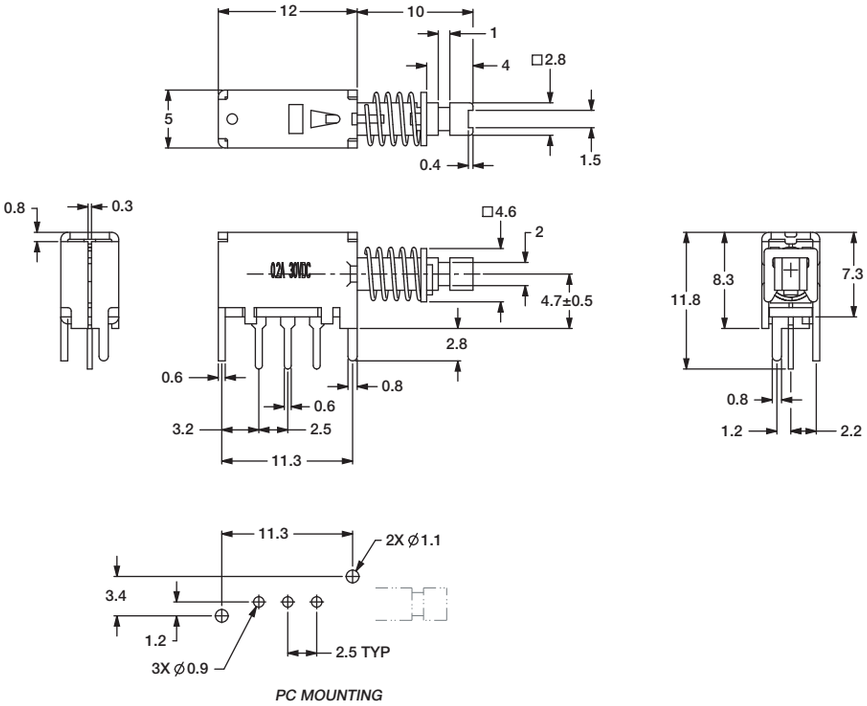

PC MOUNTING

PN 21 DPDT Mom. with "S" Actuator
PN 22 DPDT Locking with "S" Actuator

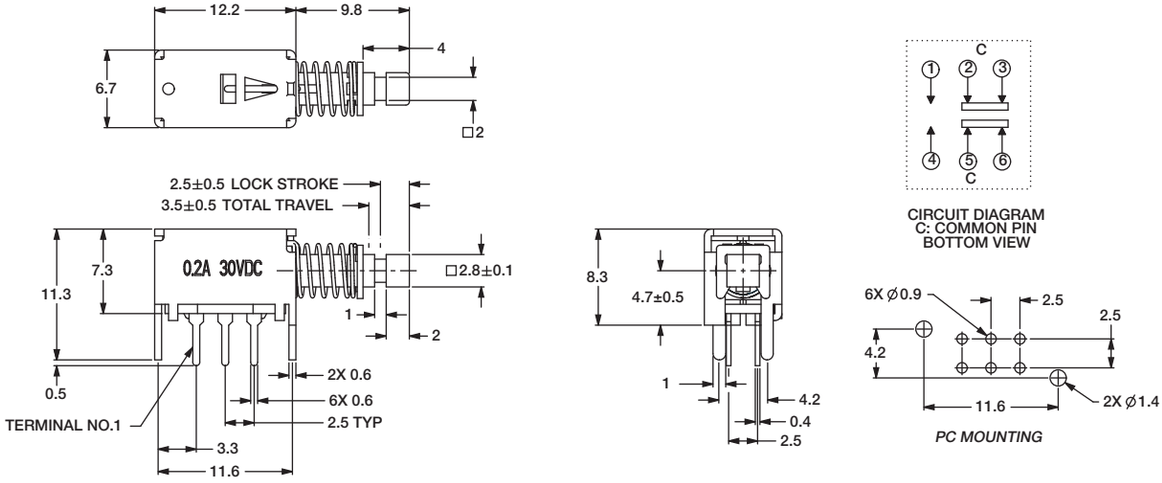

PC MOUNTING

Third Angle Projection

Dimensions are shown: mm
Specifications and dimensions subject to change

PN 21 DPDT Mom. with "L" Actuator
PN 22 DPDT Locking with "L" Actuator

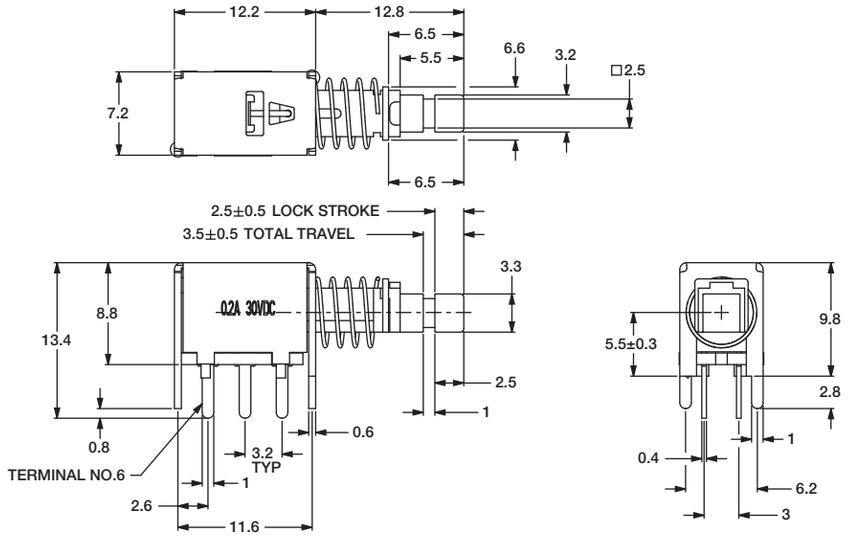

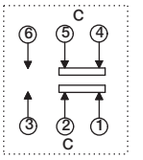

CIRCUIT DIAGRAM
C: COMMON PIN
BOTTOM VIEW

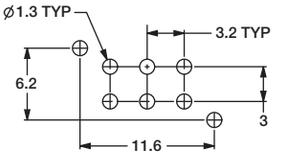

PC MOUNTING

BUTTONS MUST BE ORDERED SEPARATELY. SHIPPED IN BULK.

PE

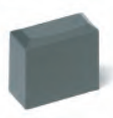

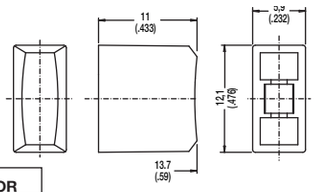

OPTION CODE	COLOR
RD	Red
GY	Gray
BK	Black
WH	White

PE and PV buttons fit "L" actuators

PV

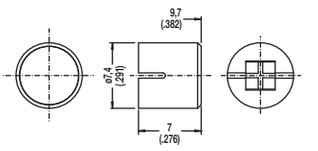

Indexed

G001A Black
G001G Gray
G001I Ivory
G001R Red

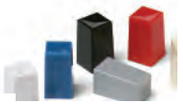

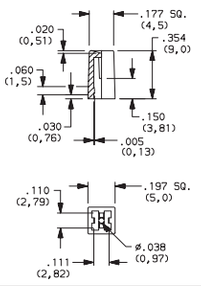

Rectangular

G002A Black
G002G Gray
G002I Ivory
G002R Red

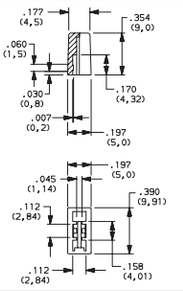

Round

G003A Black
G003G Gray
G003I Ivory
G003R Red

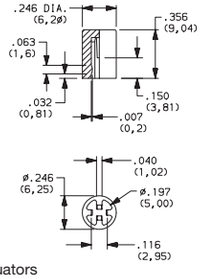

G001, G002, G003 and G004 buttons fit "S" actuators

Square

G004A Black
G004G Gray
G004I Ivory
G004R Red

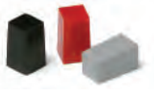

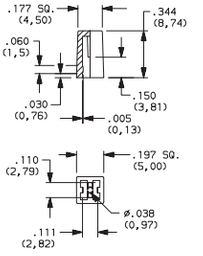

Third Angle Projection

Dimensions are shown: Inches (mm)
Specifications and dimensions subject to change

PHB Series
Short Stroke Pushbutton Switches

Features/Benefits

- ***Momentary or latching action***
- ***Low cost, reliable contact design***
- ***2 & 4 pole configurations***
- ***Sealed contacts***
- ***Optional buttons***
- ***RoHS compliant***

Typical Applications

- ***Computers and peripherals***
- ***Instrumentation and measurement equipment***
- ***Non-power, on-off switch applications***

Specifications

RATING: 1 A @ 15 V DC

DIELECTRIC STRENGTH (50 Hz/1 min.): 500 V DC between terminals or between terminals and frame for 1 minute

OPERATING LIFE: 10,000 cycles at rated load

CONTACT RESISTANCE: 20 m Ωohms initial

INSULATION RESISTANCE: 100 M Ωohms

TOTAL TRAVEL/LATCHING TRAVEL: 2.5mm (± 0.5 mm) / 1.5mm (± 0.5 mm) to latch EE option (push-push)

OPERATING FORCE:
2U option: 170 grams ± 100 grams (1.67 ± 0.98N)
4U option: 230 grams ± 100 grams (2.26 ± 0.98N)

OPERATING TEMPERATURE: -10˚C to 60˚C

BOUNCE TIME: ≤10 ms

SEALING: Sealed contacts.

PACKAGING: Switches; PHB2 models: 84 pcs per tray; PHB4 models 72 pcs per tray
Optional Caps; Bulk bag - 100 caps per bag

Materials

FIXED TERMINAL: Brass, silver plated

MOVABLE CONTACT: Phosphor bronze, silver plated

COVER: PA 66 Black

COVER TO BASE RETAINING CLIP: POM

ACTUATOR: POM

RETURN SPRING: Stainless steel

SPRING RETAINING RING: Steel, nickel plate

BASE: Phenolic resin

TERMINAL SEAL: Epoxy.

NOTE: Specifications and materials listed above are for switches with standard options. For information on specific and custom switches, consult Customer Service Center.

Build-A-Switch

To order, simply select desired option from each category and place in the appropriate box. For additional options not shown in catalog, consult Customer Service Center.

Switch

P H B — [ ][ ] — [ ][ ] — [ ][ ] — 1 A

Contact Arrangement
2U 2 Changeovers
4U 4 Changeovers

Mechanical Function
OA Momentary
EE Push-push

Termination
TS Straight
SN Kinked (plug in)

Electrical Rating
1A 1 Amp / 15 VDC

Caps (order separately)

[ ][ ][ ][ ][ ]

INDEXED	COLOR
G001A	BLACK
G001G	GRAY
G0011	IVORY
G001R	RED

RECTANGULAR	COLOR
G002A	BLACK
G002G	GRAY
G0021	IVORY
G002R	RED

ROUND	COLOR
G003A	BLACK
G003G	GRAY
G0031	IVORY
G003R	RED

SQUARE	COLOR
G004A	BLACK
G004G	GRAY
G0041	IVORY
G004R	RED

Dimensions are shown: Inches (mm)
Specifications and dimensions subject to change

TERMINATION

TS STRAIGHT

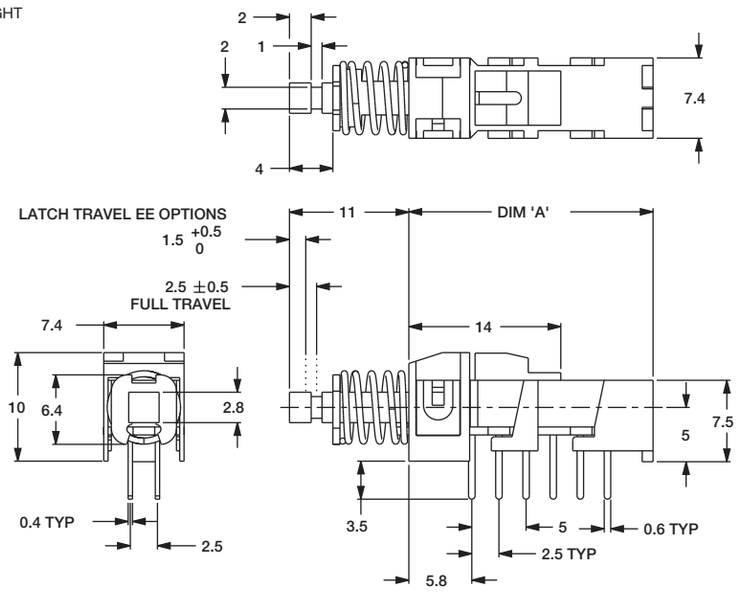

POLES	MODEL NO.	DIM 'A'	ACTION
4	PHB4UEE1A	22,5	PUSH/PUSH
	PHB4U0A1A	22,5	MOMENTARY
2	PHB2UEE1A	15,0	PUSH/PUSH
	PHB2U0A1A	15,0	MOMENTARY

SN KINKED (PLUG IN)

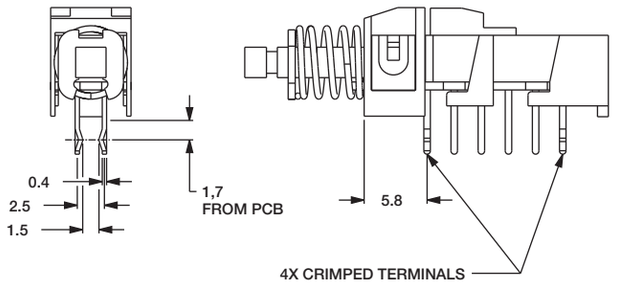

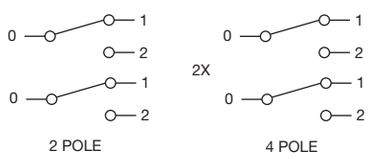

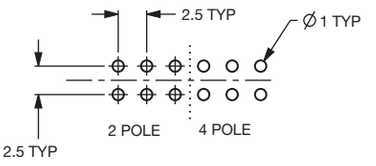

Third Angle Projection

Dimensions are shown: mm
Specifications and dimensions subject to change

PHB Series
Short Stroke Pushbutton Switches

CAPS

Indexed

G001A Black
G001G Gray
G001I Ivory
G001R Red

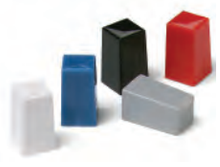

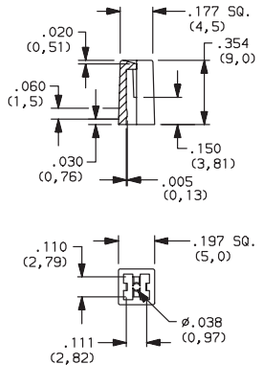

Rectangular

G002A Black
G002G Gray
G002I Ivory
G002R Red

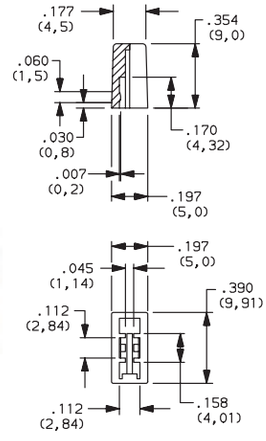

Round

G003A Black
G003G Gray
G003I Ivory
G003R Red

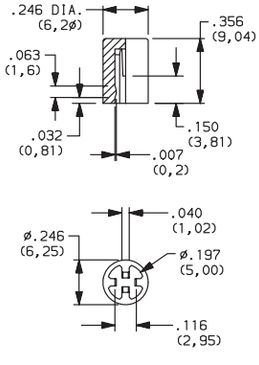

Square

G004A Black
G004G Gray
G004I Ivory
G004R Red

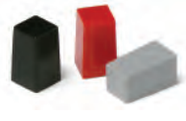

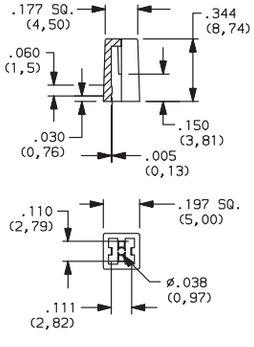

Third Angle Projection

Dimensions are shown: Inches (mm)
Specifications and dimensions subject to change

Features/Benefits

- *Up to 10 poles per module*
- *Various contact terminals*
- *Various mounting & switch ganging configurations*
- *Mechanical indicator buttons*
- *RoHS compliant*

Typical Applications

- *Audio selection*
- *Digital equipment interface*
- *Medical equipment interface*

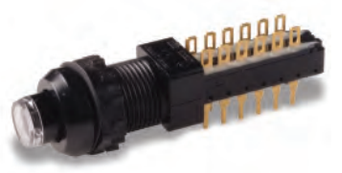

Specifications

SWITCHING POWER: F module max. AC/DC: Silver: 50 VA/15W, Gold: 1 VA/300 mW.

SWITCHING VOLTAGE: F module max. AC/DC: Silver: 125/30V, Gold: 50/30 V.

SWITCHING CURRENT: F module max. AC/DC: Silver: 0.5A/0.5A, Gold: 0.04A/0.01A.

CARRYING CURRENT: Max at du = 20C: Silver: < 2A, Gold: <0.5A.

DIELECTRIC STRENGTH (50 Hz, 1 min.): Chassis/contact: ^1500V Between contacts: ^1500V.

OPERATING LIFE "OA/EE" (24V/200mA): >10^5 operations "GR": >3.5 x 104 operations.

CONTACT RESISTANCE: Initial: Typical %10 mΩ, max. 20 mΩ After operating life: %100 mΩ

INSULATION RESISTANCE: ^10^9 Ω between open contacts, ^10^9 Ω between chassis and contacts.

CAPACITANCE (at f = 10 kHz): %0.7 pF between 2 contacts.

TOTAL TRAVEL/LATCHING TRAVEL: 4.7mm/3.3mm (.185 inch/ .130 inch).

All models and options are RoHS compliant and compatible.

NOTE: All models and options are RoHS compliant and compatible.

NOTE: Specifications and materials listed above are for switches with standard options. For information on specific and custom switches, consult Customer Service Center.

TYPICAL F OPERATING FORCE: 2U: 6.5N (650 grams); 4U: 6.5N (650 grams); 6U: 7.5N (750 grams); 8U: 9.0N (900 grams); 10U: 9.0N (900 grams).

EUROPEAN TYPICAL SF OPERATING FORCE: 2U: 3.5N±0.5N (350 grams±100 grams); 4U: 5N±1N (500 grams±100 grams); 6U: 6.5N±1N (650 grams±100 grams); 8U: 9.0N±1N (900 grams±100 grams).

OPERATING TEMPERATURE RANGE: -40˚C to 70˚C.

Materials

HOUSING: Polycarbonate UL 94V-0 or polyester UL 94V-0.

ACTUATOR: Polyester UL 94V-0.

MOVABLE CONTACTS: Bimetal brass, silver plated, gold plate over nickel.

STATIONARY CONTACTS & TERMINALS: Brass, silver plated, gold plated.

TERMINAL BOARD: Polyester UL 94V-0.

RETURN SPRING: Music wire.

TERMINAL SEAL: RTV adhesive sealant.

CHASSIS: Steel.

LOCKOUT PIN: Steel.

BLOCKERS: Steel.

Build-A-Switch

To order, simply select desired option from each category and place in the appropriate box. Available options are shown and described on pages A-88 thru A-95. For additional options not shown in catalog, consult Customer Service Center.

If requesting only a switch, select either a North American or European switch as noted below. Chassis and buttons are sold separately. If multiple stations are selected, we will assume all switches are the same unless noted otherwise.

North American Order Code - Switch Only

Designation
- **F** F Series
- **FLT** Light touch F series
- **ZF** Central mounted F series

Contact Arrangement
- **2U** 2PDT
- **4U** 4PDT
- **6U** 6PDT
- **8U** SPDT
- **10U** 10PDT

Mechanical Function
- **OA** Momentary
- **EE** Alternate (push-push)
- **GR** Interlock
- **AOR** Central release
- **OASP** Momentary with lockout
- **GRSP** Interlock with lockout

Terminal Sealing
- **(NONE)** None
- **TB** Top/bottom

Terminal Style
- **(NONE)** Solder lugs & PC pins
- **01A** Cut solder lugs
- **01B** Cut PC pins, for other configurations, consult factory

Electrical Function
- **(NONE)** BBM Break-Before-Make
- **M** MBB (special) Make-Before-Break

Contact Material
- **(NONE)** Silver, AG
- **AU** Gold

Dress nut*
*Central mounted F series only

- **(NONE)** No dress nut
- **B** Black
- **C** Chrome

F Series
Pushbutton Switches

European Order Code - Switch Only

Designation
- **SF** F Series
- **ZF** Central mounted F series

Contact Arrangement
- **2U** 2PDT
- **4U** 4PDT
- **6U** 6PDT
- **8U** SPDT

Mechanical Function
- **OA** Momentary
- **EE** Alternate (push-push)
- **GR** Interlock

Terminal Style
- **(NONE)** Solder lugs & PC pins
- **LB** Cut solder lugs
- **PB** Cut PC pins, for other configurations, consult factory

Electrical Function
- **(NONE)** BBM

Contact Material
- **(NONE)** Silver, AG
- **P** Gold

Dress nut*
*Central mounted F series only

- **(NONE)** No dress nut
- **B** Black
- **C** Chrome

*Minimum order quantities apply.

Order Code - Buttons

Solid Buttons

Style
- **F01** FMR
- **F02** FG*
- **F12** FSC
- **F13** FSD
- **F14** FU12
- **F15** FSB
- **F16** FE
- **F19** FA
- **F21** F001

Button Color
- **01** Black
- **02** White
- **03** Red
- **04** Light gray

*Button options for central mounting configurations, use 'FG' for central mount with chrome dress nut, use 'FA200' for central mount with black dress nut.

Mechanical Indicator Buttons

Style
- **F01** FA100
- **F02** FA101
- **F07** FA120
- **F08** FA201
- **F11** FA200*

Shell Color
- **01** Black

Out Position Color
- **01** Black

In Position Color
- **02** White
- **06** Yellow
- **07** Blue
- **08** Green
- **12** Orange

BUTTON REMOVAL

A button of a push-push switch should only be removed in the "OFF" non-latching position.

Order Code - Chassis

To order a switch with chassis, create the switch part number listed above and add the Chassis part number configurator information at the end of the part number.

Note: We do not guarantee or recommend interlocking beyond 10 stations.

C

No. of Stations
- **01 thru 23** Comes with standard .094 (2,4mm) mounting holes Note: Single station chassis available with special mounting configurations, consult factory.

Spacing between Stations
- **00** Single station
- **10** 10mm
- **12.5** 12.5mm
- **15** 15mm
- **17.5** 17.5mm
- **20** 20mm

Special Acknowledgements
See note

*Minimum order quantities apply.

SWITCHES WITH STANDARD OPTIONS

F2UEE

CONTACT ARRANGEMENT	LENGTH DIM 'L'
2U	0.827 (21,00)
4U	1.300 (33,00)
6U	1.770 (45,00)
8U	2.240 (57,00)
10U	2.720 (69,00)

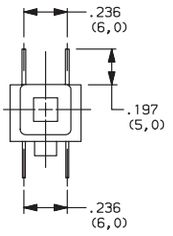

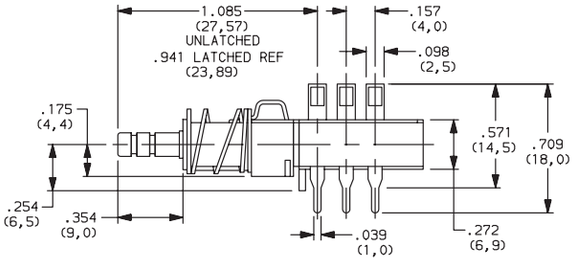

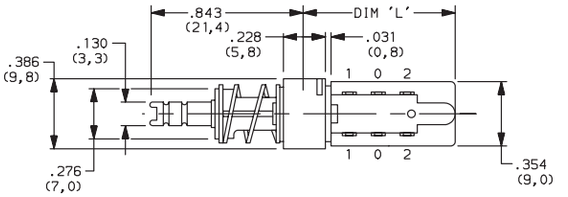

ZF2UEEBF11010108

CONTACT ARRANGEMENT	LENGTH DIM 'L'
2U	0.827 (21,00)
4U	1.300 (33,00)
6U	1.770 (45,00)
8U	2.240 (57,00)
10U	2.720 (69,00)

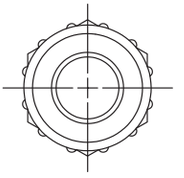

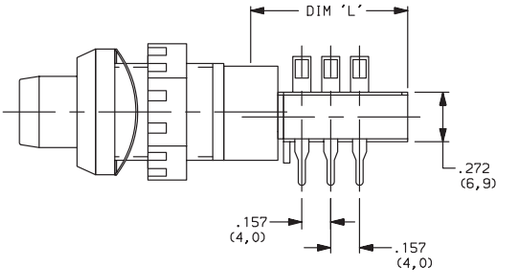

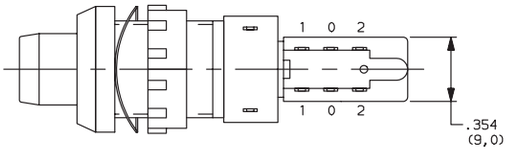

DESIGNATION

Designation, North America

F F Series
FLT Light touch F series
ZF Central mounted F series

Designation, Europe

SF F Series
ZF Central mounted F series

Third Angle Projection

Dimensions are shown: Inches (mm)
Specifications and dimensions subject to change

F Series
Pushbutton Switches

CONTACT ARRANGEMENT

OPTION CODE	NO. OF POLES	SCHEMATIC
2U	2PDT	
4U	4PDT	2X
6U	6PDT	3X
8U	8PDT	4X
10U	10PDT	5X

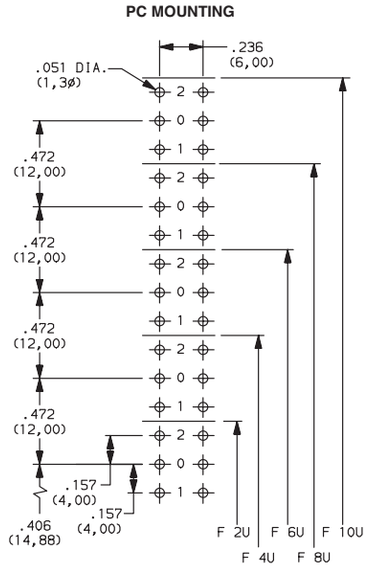

MECHANICAL FUNCTION

North America

OPTION CODE	FUNCTION
OA	Momentary
EE	Alternate (push-push)
GR	Interlock
AOR	Central release
OASP	Momentary with lockout
GRSP	Interlock with lockout

Europe

OPTION CODE	FUNCTION
OA	Momentary
EE	Alternate (push-push)
GR	Interlock

TERMINAL SEALING

(NONE) NO SEAL

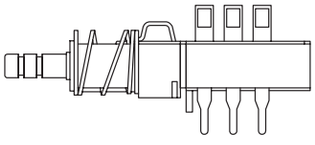

F2UEE shown in example above.

TB TOP & BOTTOM

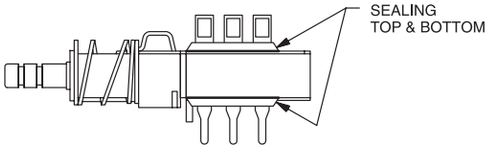

NOTE: Available for North America only

Third Angle Projection

Dimensions are shown: Inches (mm)
Specifications and dimensions subject to change

TERMINAL STYLE

(NONE) SOLDER LUGS & PC PINS

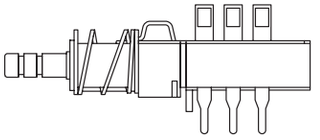

01A CUT SOLDER LUGS (North America)

LB CUT SOLDER LUGS (Europe)

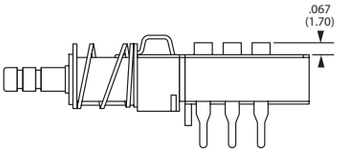

01B CUT PC PINS (North America)

PB CUT PC PINS (Europe)

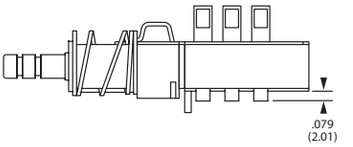

ELECTRICAL FUNCTION

OPTION CODE	FUNCTION
(NONE)	BBM Non-shorting
M	MBB Shorting (North America only)

CONTACT MATERIAL

NORTH AMERICA OPTION CODE	EUROPE OPTION CODE	RoHS COMPLIANT *	RoHS COMPATIBLE *	MATERIAL	RATING
(NONE)	(NONE)	YES	YES	SILVER, AG	50 VA/15 W; 125/30 V; 0.5/0.5 A
AU	P	YES	YES	GOLD	1 VA/300mW; 50/30 V; 0.04 A/0.01 A

* Note: See Technical Data section of this catalog for RoHS compliant and compatible definitions and specifications.

DRESS NUT

(NONE) NO DRESS NUT FOR F & F/LT DESIGNATIONS

B BLACK

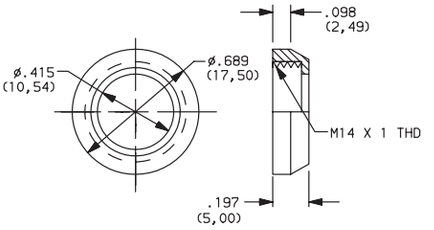

PANEL CUTOUT

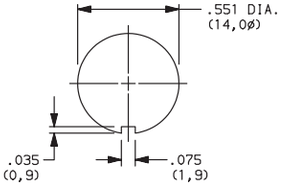

NOTE: Available with ZF designation and FA200 buttons.

C CHROME

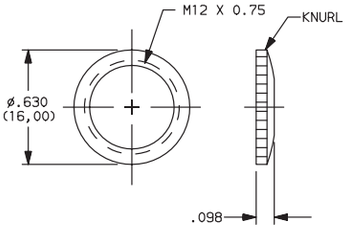

PANEL CUTOUT

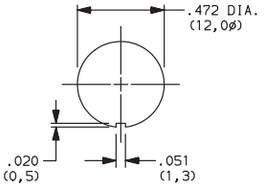

NOTE: Available with ZF designation and FG button.

Third Angle Projection

Dimensions are shown: Inches (mm)
Specifications and dimensions subject to change

F Series
Pushbutton Switches

SOLID BUTTON

COLOR
STYLE

STYLE

F01 FMR

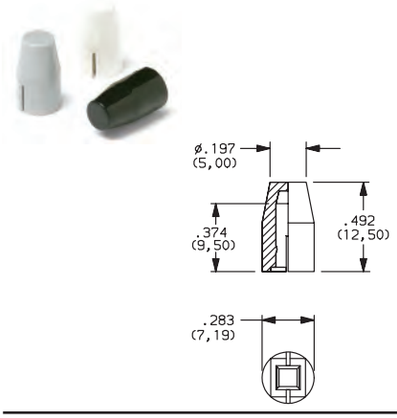

F02 FG

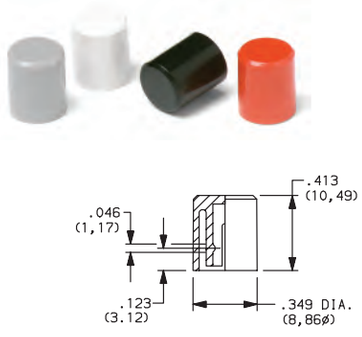

F12 FSC

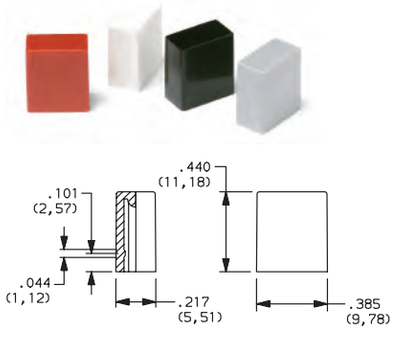

F13 FSD

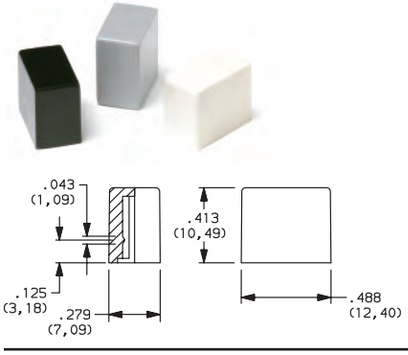

F14 FU12

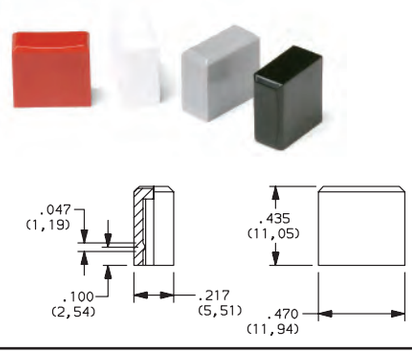

F15 FSB

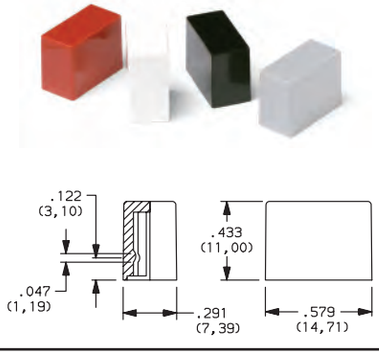

F16 FE

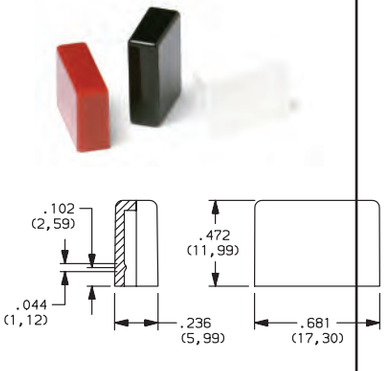

F19 FA

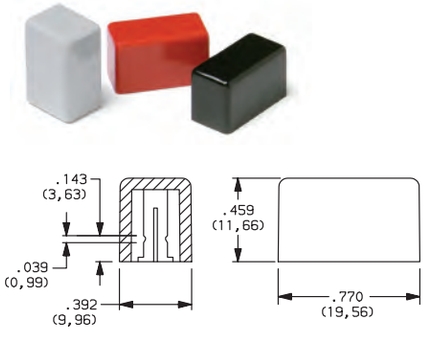

F21 F001

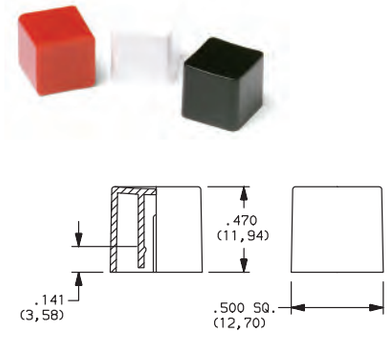

OPTION CODE	COLOR
01	BLACK
02	WHITE
03	RED
04	LT. GRAY

Dimensions are shown: Inches (mm)
Specifications and dimensions subject to change

MECHANICAL BUTTON

SHELL COLOR | IN POSITION COLOR
STYLE | OUT POSITION COLOR

STYLE

F01 FA100

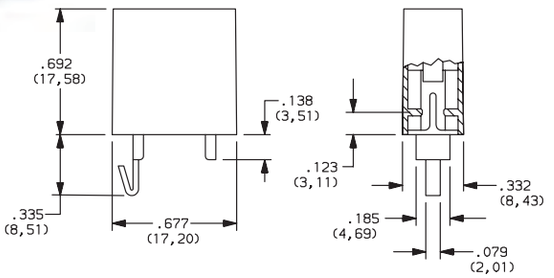

F02 FA101

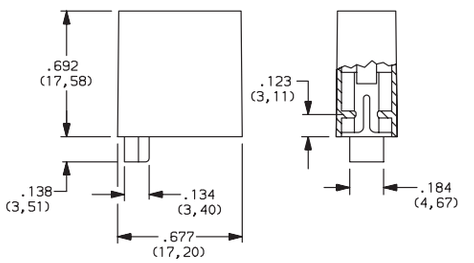

F07 FA120

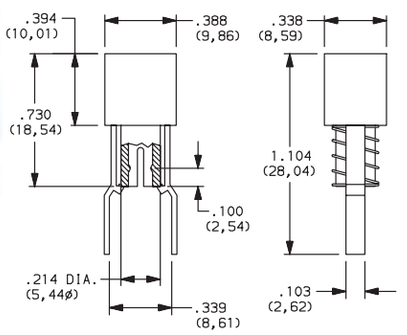

F08 FA201

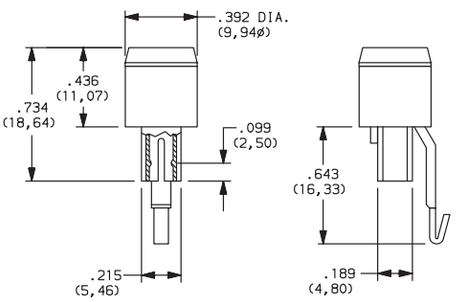

F11 FA200

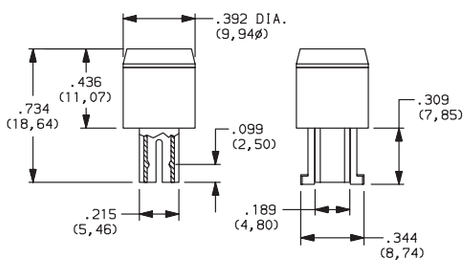

SHELL COLOR

01 BLACK

OUT POSITION COLOR

01 BLACK

IN POSITION COLOR

OPTION CODE	COLOR
02	WHITE
06	YELLOW
07	BLUE
08	GREEN
12	ORANGE

Dimensions are shown: Inches (mm)
Specifications and dimensions subject to change

F Series
Pushbutton Switches

CHASSIS

SPACING

NO. OF STATIONS

NUMBER OF STATIONS

C00 Thru C10 Comes with standard 0.094 (2,44mm) mounting holes

NOTE: Single station chassis available with mounting configurations, consult factory.

SPACING

00 SINGLE STATION

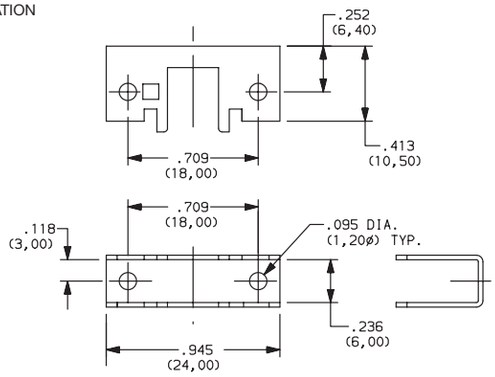

10 10mm

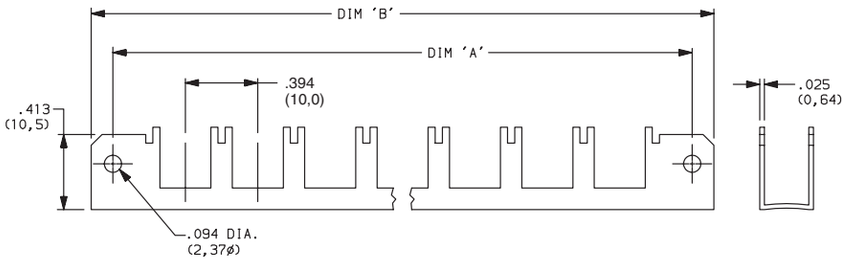

No. of Stations	Dim. 'A'	Dim. 'B'	Tolerance
2	1.182 (30,02)	1.418 (36,02)	0.005
3	1.575 (40,01)	1.811 (46,00)	0.010
4	1.969 (50,01)	2.205 (56,01)	0.010
5	2.363 (60,02)	2.599 (66,01)	0.010
6	2.757 (70,03)	2.993 (76,02)	0.015
7	3.150 (80,01)	3.386 (86,00)	0.015
8	3.544 (90,02)	3.780 (96,01)	0.015
9	3.938 (100,03)	4.174 (106,02)	0.015
10	4.331 (110,01)	4.567 (116,00)	0.015

12.5 12.5mm

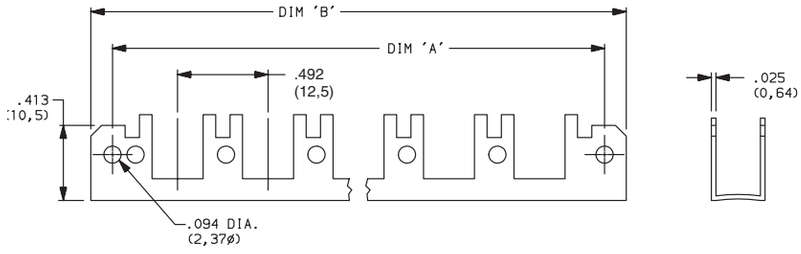

No. of Stations	Dim. 'A'	Dim. 'B'	Tolerance
2	1.200 (30,48)	1.436 (36,47)	0.005
3	1.692 (42,98)	1.928 (48,97)	0.010
4	2.184 (55,47)	2.420 (61,47)	0.010
5	2.676 (67,97)	2.912 (73,96)	0.010
6	3.169 (80,49)	3.405 (86,49)	0.015
7	3.661 (92,99)	3.897 (98,98)	0.015
8	4.153 (105,49)	4.389 (111,48)	0.015
9	4.645 (117,98)	4.881 (123,98)	0.015
10	5.137 (130,48)	5.373 (136,47)	0.015

Third Angle Projection

Dimensions are shown: Inches (mm)
Specifications and dimensions subject to change

CHASSIS

SPACING

NO. OF STATIONS

SPACING

15 15mm

No. of Stations	Dim. 'A'	Dim. 'B'	Tolerance
2	1.374 (34,90)	1.615 (41,02)	0.005
3	1.969 (50,01)	2.205 (56,01)	0.010
4	2.560 (65,02)	2.796 (71,02)	0.010
5	3.150 (80,01)	3.386 (86,00)	0.010
6	3.741 (95,02)	3.977 (101,02)	0.015
7	4.332 (110,03)	4.568 (116,03)	0.015
8	4.922 (125,02)	5.158 (131,01)	0.015
9	5.513 (140,03)	5.749 (146,02)	0.015
10	6.103 (155,02)	6.339 (161,01)	0.015

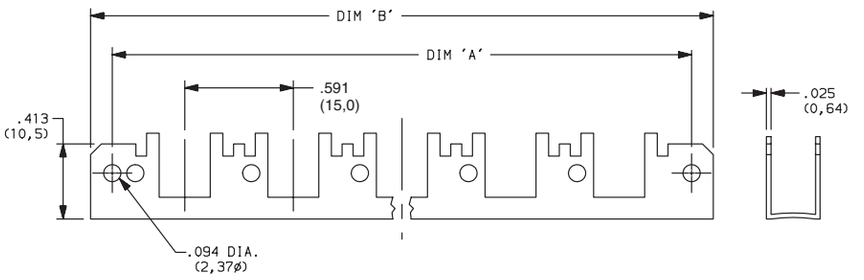

17.5 17.5mm

No. of Stations	Dim. 'A'	Dim. 'B'	Tolerance
2	1.477 (37,52)	1.713 (43,51)	0.005
3	2.166 (55,02)	2.402 (61,01)	0.010
4	2.855 (75,52)	3.091 (78.51)	0.010
5	3.544 (90,02)	3.780 (96,01)	0.010
6	4.233 (107,52)	4.469 (113,51)	0.015
7	4.922 (125,02)	5.158 (131,01)	0.015
8	5.611 (142,52)	5.847 (148.51)	0.015
9	6.300 (160,02)	6.536 (166,01)	0.015
10	6.989 (177,52)	7.225 (183,52)	0.015

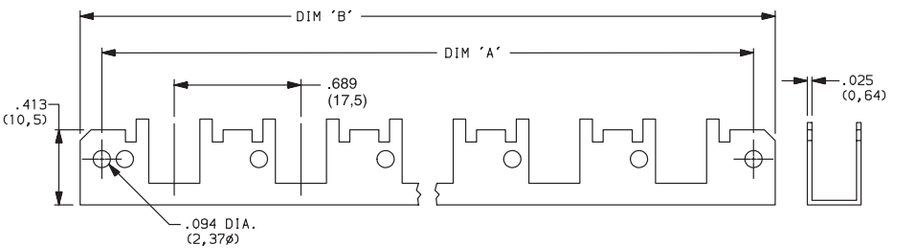

20 20mm

No. of Stations	Dim. 'A'	Dim. 'B'	Tolerance
2	1.575 (40,01)	1.811 (46,00)	0.005
3	2.363 (60,02)	2.599 (66,01)	0.010
4	3.150 (80,01)	3.386 (86,00)	0.010
5	3.938 (100,03)	4.174 (106,02)	0.010
6	4.725 (120,02)	4.961 (126,01)	0.015
7	5.512 (140,00)	5.748 (146,00)	0.015
8	6.300 (160,02)	6.536 (166,01)	0.015
9	7.087 (180,01)	7.323 (186,00)	0.015
10	7.875 (200,03)	8.111 (206,02)	0.015

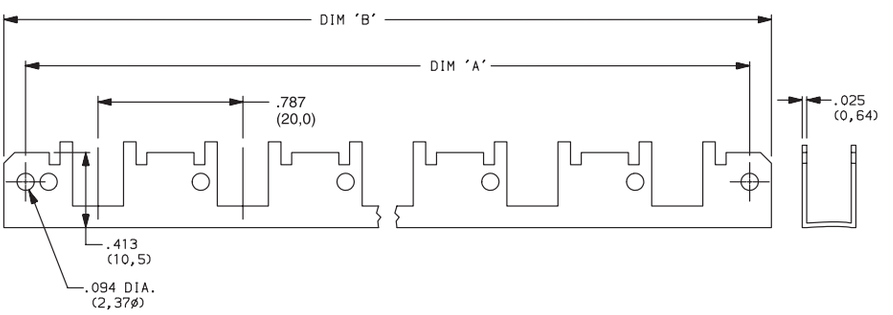

Third Angle Projection

Dimensions are shown: Inches (mm)
Specifications and dimensions subject to change

NE-18 Series
Mains / Power Switches

Features/Benefits

- ***Chassis or panel mount***
- ***Various buttons***
- ***Various contact configurations***
- ***RoHS compliant***

Typical Applications

- ***Mains/power switching***
- ***Consumer electronics***
- ***Audio equipment***
- ***Digital products***

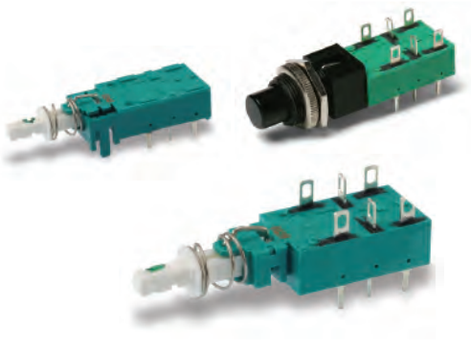

UL61058-1

Specifications

ELECTRICAL RATING:

NE18 Series:

8A GP, 125 VAC, 50/60 Hz, 1E4, T70

6A GP, 250 VAC, 50/60 Hz, 1E4, T70

6(4)A RM, 250 VAC, 50/60 Hz, 1E4, T70

6/48A RC, 250 VAC, 50/60 Hz, 1E4, T70

1RA, 100 VDC, 1E4, T70

8RA, 30VDC, 1E4, T70

NE18CTII Series:

4A GP, 250 VAC, 50/60 Hz, 1E4, T70

4/48A RC, 250 VAC, 50/60 Hz, 1E4, T70

1RA, 100 VDC, 1E4, T70

4RA, 30VDC, 1E4, T70

DIELECTRIC STRENGTH (50 Hz, 1 min.): 2000 V

OPERATING LIFE AT MAX. LOAD AND AT MAX. INRUSH CURRENT: ^10^4 operations[5])

CONTACT RESISTANCE: Initial: 50mΩ; After 10^4 operations: 70mΩ.

INSULATION RESISTANCE: ^10^{12} Ωchassis – nearest contact; ^10^{12} Ωmains contact – mains contact; ^10^{12} Ωmains contact – mains contact after 10^4 operations.

LOW VOLTAGE CONTACT:

SWITCHING POWER MAX.: 12W

SWITCHING VOLTAGE MAX.: 24V

SWITCHING CURRENT MAX.: 0.5A

TOTAL TRAVEL: 4.7mm (.185 inch)

LATCHING TRAVEL: 3.3mm (.130 inch)

OPERATING FORCE: Without auxiliary low voltage contacts: NE18: 7N (700 grams); NE18CTII: 9.5N (950 grams).

With auxiliary low voltage contacts: NE18: 8N (800 grams); NE18CTII: 11N (1100 grams).

SEALING: Dust proof.

Materials

HOUSING, ACTUATOR & TERMINAL BOARD: Thermoplastic polyester (UL 94V-0).

MOVABLE CONTACT: Silver nickel alloy, silver plated.

FIXED CONTACTS: Silver nickel alloy, silver plated.

COMMON CONTACTS & TERMINALS: Copper alloy, silver plated.

RETURN SPRING: Music wire.

NOTE: All models arer RoHS compliant and compatible.

NOTE: Specifications and materials listed above are for switches with standard options. For information on specific and custom switches, consult Customer Service Center.

Build-A-Switch

To order, simply select desired option from each category and place in the appropriate box. Available options are shown and described on pages A-97 thru A-104. For additional options not shown in catalog, consult Customer Service Center.

If requesting only a switch, select the switch as noted below. Buttons are sold separately.

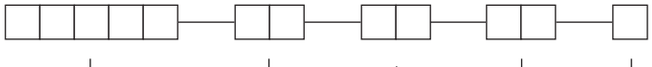

Designation
NE18 NE1B
ZNE18 Cental mounted NE1B

Contact Arrangement
NE18 code # - see list

Mechanical Function
OA Momentary
EE Alternate (push-push)

Single Station Chassis
01 With .094 mounting holes
(NONE) No chassis
02 With 4-40 tapped mounting holes
03 Special chassis (consult factory)

Dress nut*
*Central mounted
ZNE18 series only
(NONE) No dress nut
B Black
C Chrome

Dimensions are shown: Inches (mm)
Specifications and dimensions subject to change

Order Code - Buttons

Solid Buttons

Style
- **F01** FMR
- **F02** FG*
- **F12** FSC
- **F13** FSD
- **F14** FU12
- **F15** FSB
- **F16** FE
- **F19** FA
- **F21** F001

Button Color
- **01** Black
- **02** White
- **03** Red
- **04** Light gray

Mechanical Indicator Buttons

Style
- **F01** FA100
- **F02** FA101
- **F07** FA120
- **F08** FA201
- **F11** FA200*

Shell Color
- **01** Black

Out Position Color
- **01** Black

In Position Color
- **02** White
- **06** Yellow
- **07** Blue
- **08** Green
- **12** Orange

*Button options for central mounting configurations, use 'FG' for central mount with chrome dress nut, use 'FA200' for central mount with black dress nut.

BUTTON REMOVAL

A button of a push-push switch should only be removed in the "OFF" non-latching position.

DESIGNATION & SWITCHES WITH STANDARD OPTIONS

NE1838EE

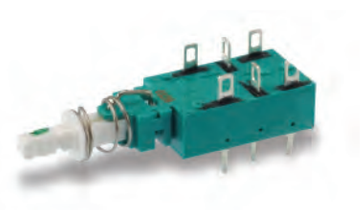

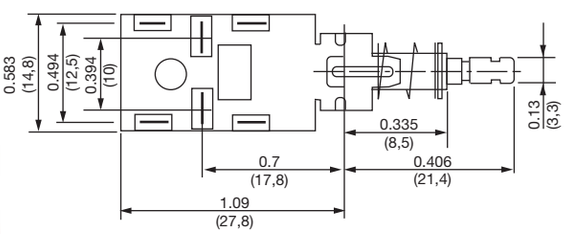

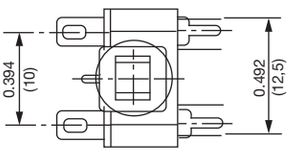

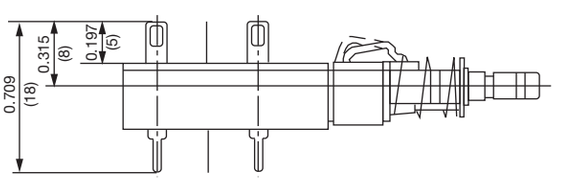

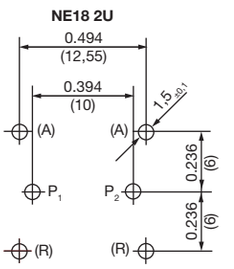

Third Angle Projection

Dimensions are shown: Inches (mm)
Specifications and dimensions subject to change

NE-18 Series
Mains / Power Switches

DESIGNATION & SWITCHES WITH STANDARD OPTIONS

NE1839EE

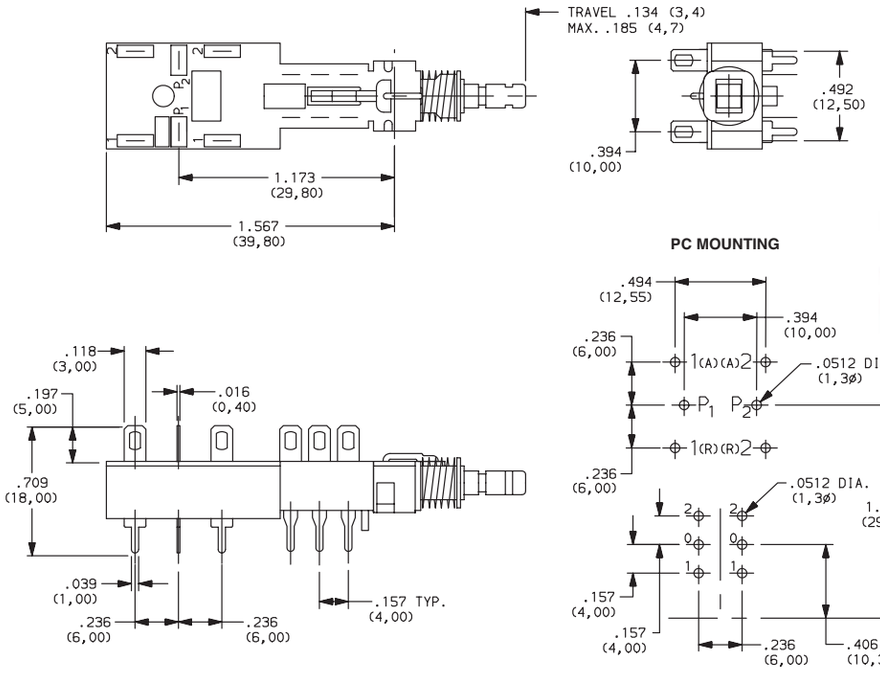

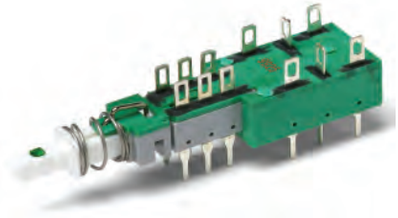

NE1846EE

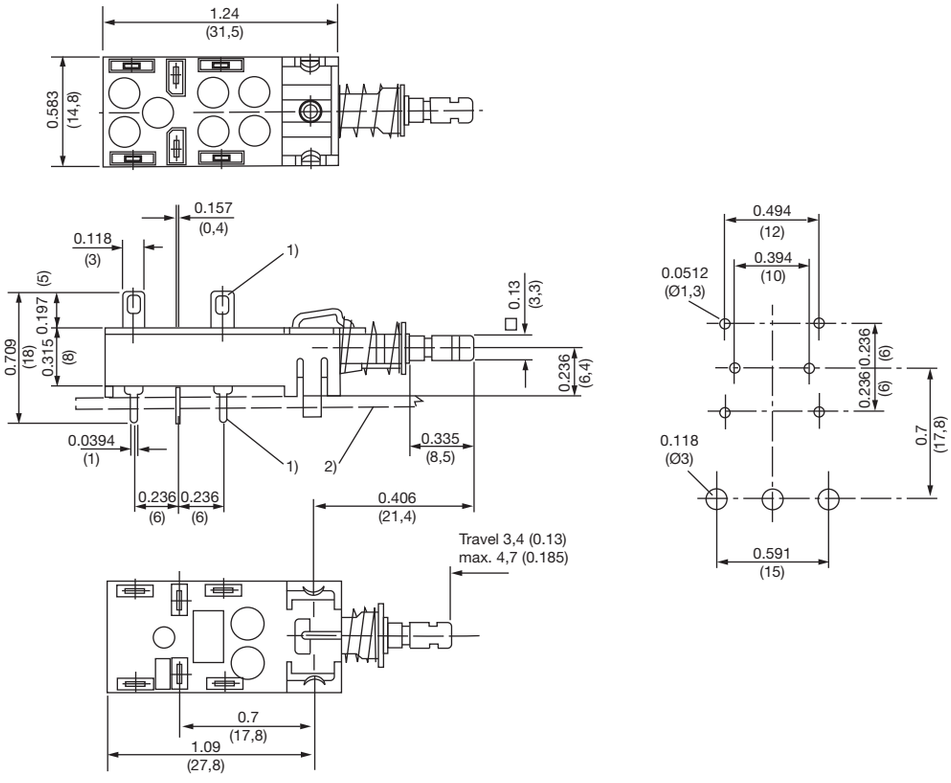

Third Angle Projection

Dimensions are shown: Inches (mm)
Specifications and dimensions subject to change

DESIGNATION & SWITCHES WITH STANDARD OPTIONS

ZNE1838EECF0201

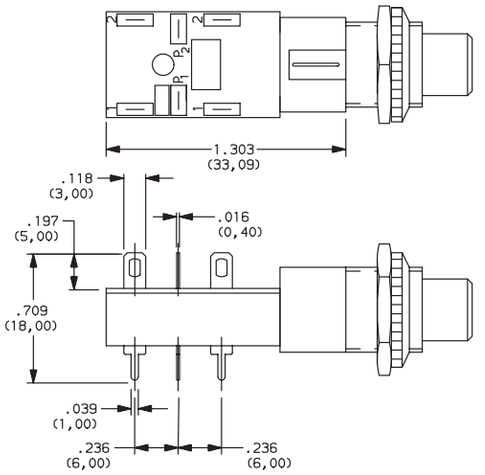

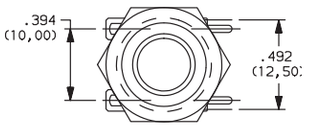

PC MOUNTING

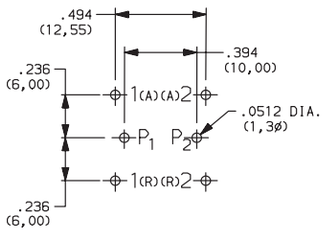

Third Angle Projection

Dimensions are shown: Inches (mm)
Specifications and dimensions subject to change

NE-18 Series
Mains / Power Switches

CONTACT ARRANGEMENT

OPTION CODE Contact capacity and availability	STYLE	ELECTRICAL CIRCUIT
37	NE18 — 2AX	DPST
38	NE18 — 2UX	DPDT
51	2U + NE18 — 2AX	DPST*
52 (4A/64)	NE18CTII — 2AX	DPST
39	2U + NE18 — 2UX	DPDT*
41	NE18 — 2AP	DPST
42	NE18 — 2UP	DPDT
43	NE18 — 2AW	DPST
44	NE18 — 2UW	DPDT
45	NE18 — 2ASX	DPST

OPTION CODE Contact capacity and availability	STYLE	ELECTRICAL CIRCUIT
46	NE18 — 2USX	DPDT
47	NE18 — 2ASP	DPST
48	NE18 — 2USP	DPDT
49	NE18 — 2ASW	DPST
50	NE18 — 2USW	DPDT
53 (4A/64)	2U + NE18CTII — 2AX	DPST
54	2U + NE18 — 2AW	DPST
55	2U + NE18 — 2AP	DPST
56	2U + NE18 — 2UW	DPDT
57	2U + NE18 — 2UP	DPDT

* 2U + Denotes auxiliary set of low current contacts DPDT
2A = DPST
2U = DPDT
S = Snap-in mounting
X = Solder lug/PC pins
W = Solder lugs only
P = PC pins only

NOTES
1. Contact plating is silver on all Power Switches.
2. The electrical function is Break Before Make (BBM) on all Power Switches.
3. The terminals will be epoxy sealed.

TYPE	POSSIBLE CONTACT ARRANGEMENT		CONTACT SPACING	PROTECTION CLASS (CEE 24)	APPROVALS
	POWER CONTACTS[1]	AUXILIARY CONTACTS			
NE18	2A[2]	2U	> 3mm (.118 inch)	II	UL61058-1
NE18	2A[2] 2U	2U	> 3mm (.118 inch)	I	UL61058-1
NE18CTII	2A[2]	2U	> 3mm (.118 inch)	II	UL61058-1

1) A = make contact, U = changeover contact
2) With 2A mains contacts: Mounting only by PC pins is not sufficient.

MECHANICAL FUNCTION

OPTION CODE	FUNCTION
OA	Momentary
EE	Alternate (push-push)

Third Angle Projection

Dimensions are shown: Inches (mm)
Specifications and dimensions subject to change

SINGLE STATION CHASSIS

01 WITH .094 MOUNTING HOLES

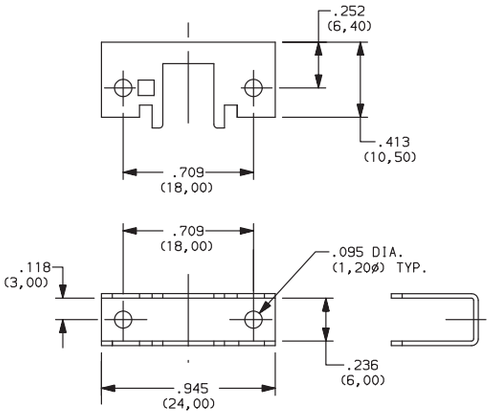

(NONE) NO CHASSIS

02 WITH 4-40 TAPPED MOUNTING HOLES

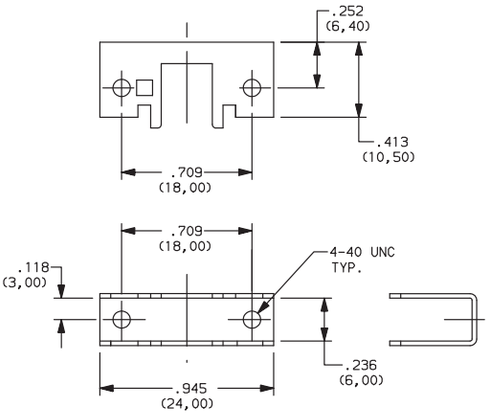

03 SPECIAL CHASSIS (CONSULT FACTORY)

DRESS NUT

(NONE) NO DRESS NUT

B BLACK

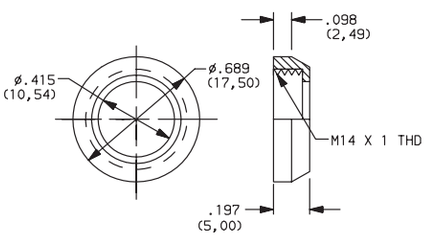

PANEL CUTOUT

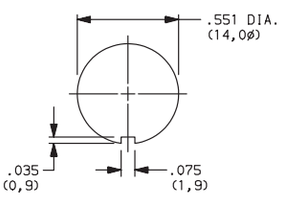

NOTE: Available with ZNE18 designation and FA200 buttons.

C CHROME

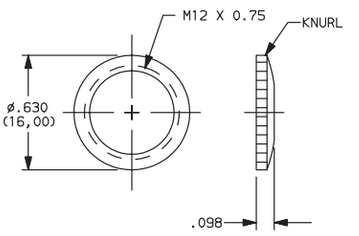

PANEL CUTOUT

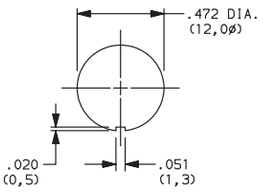

NOTE: Available with ZNE18 designation and FG button.

Third Angle Projection

Dimensions are shown: Inches (mm)
Specifications and dimensions subject to change

NE-18 Series
Mains / Power Switches

SOLID BUTTON

STYLE

F01 FMR

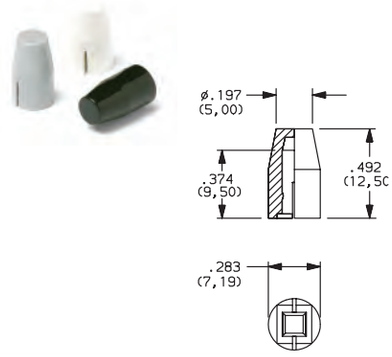

F02 FG

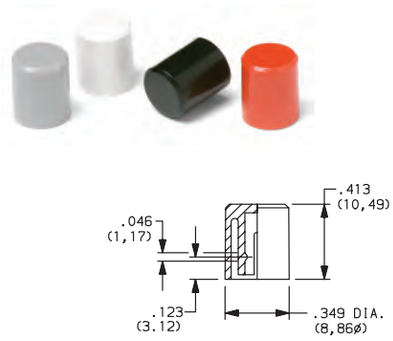

F12 FSC

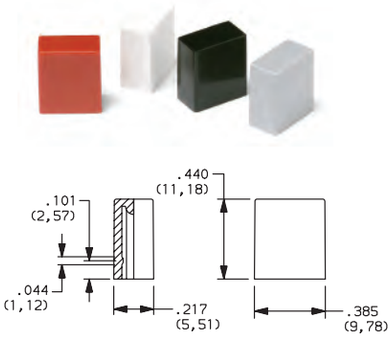

F13 FSD

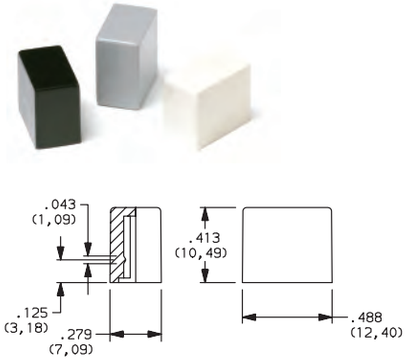

F14 FU12

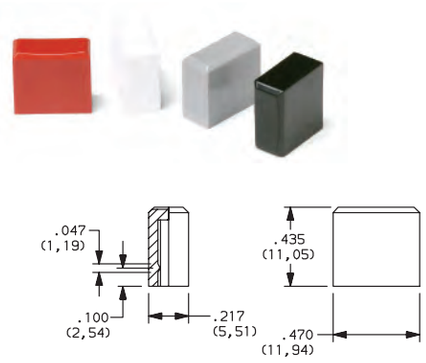

F15 FSB

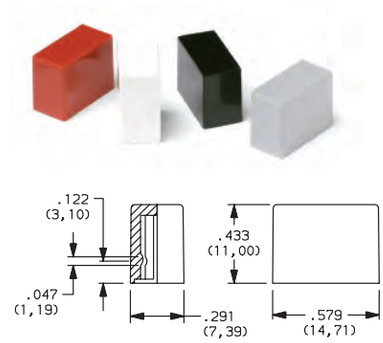

F16 FE

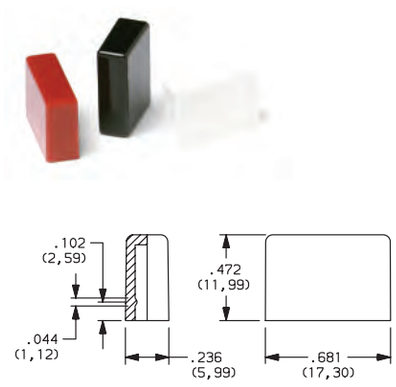

F19 FA

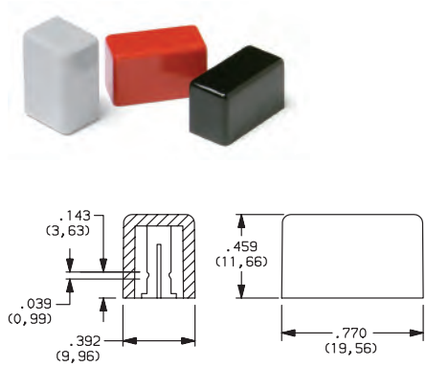

OPTION CODE	COLOR
01	BLACK
02	WHITE
03	RED
04	LT. GRAY

Third Angle Projection

Dimensions are shown: Inches (mm)
Specifications and dimensions subject to change

SOLID BUTTON

COLOR
STYLE

STYLE

F21 F001

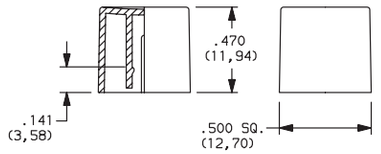

OPTION CODE	COLOR
01	BLACK
02	WHITE
03	RED
04	LT. GRAY
09	BLACK/CHROME (F03,F06 & F07 buttons only

MECHANICAL BUTTON

SHELL COLOR
IN POSITION COLOR
STYLE
OUT POSITION COLOR

STYLE

F01 FA100

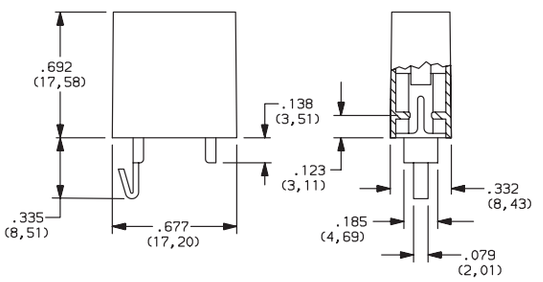

F02 FA101

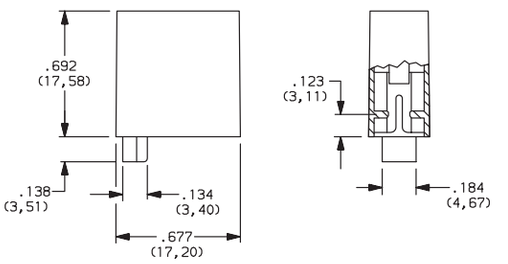

Third Angle Projection

Dimensions are shown: Inches (mm)
Specifications and dimensions subject to change

NE-18 Series
Mains / Power Switches

MECHANICAL BUTTON

SHELL COLOR — IN POSITION COLOR
STYLE — OUT POSITION COLOR

STYLE

F08 FA201

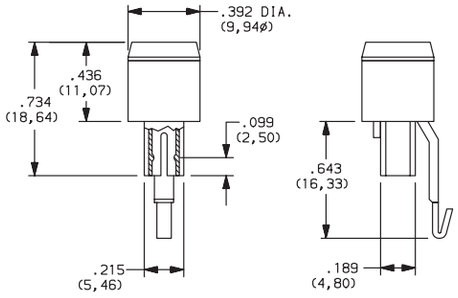

F11 FA200

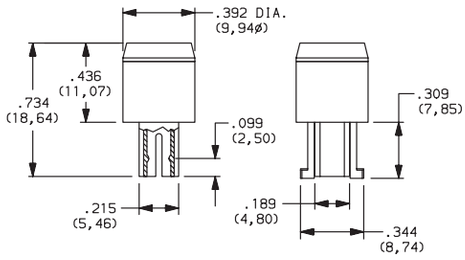

SHELL COLOR

01 BLACK

OUT POSITION COLOR

01 BLACK

IN POSITION COLOR

OPTION CODE	COLOR
02	WHITE
06	YELLOW
07	BLUE
08	GREEN
12	ORANGE

Third Angle Projection

Dimensions are shown: Inches (mm)
Specifications and dimensions subject to change

FP Series
Sealed Ultra Miniature Pushbutton Switches

Features/Benefits

- ***Vertical and right angle mount***
- ***Extended operating life 50,000 cycles***
- ***Optional caps***
- ***Sealed against soldering and cleaning processes***
- ***RoHS compliant***

Typical Applications

- ***Networking equipment***
- ***Modems***
- ***Reset functions***
- ***Instrumentation***

Specifications

CONTACT RATING: Max. 0.4 VA (28 V DC or V AC).
ELECTRICAL LIFE: 50,000 cycles.
CONTACT RESISTANCE: (10mA @ 2 V DC) 80 mΩ max. initial.
INSULATION RESISTANCE: 500MΩ min. @ 500 V DC - 1 minute.
OPERATING TEMPERATURE: –20°C to 80°C.
SOLDERABILITY: Per MIL-STD-202F method 208D, or EIA RS-186E method 9.
PACKAGING:
Tray pack - 100 switches per tray.
Caps (optional) - Bulk bag; 100 caps per bag.

NOTE: Specifications and materials listed above are for switches with standard options. For information on specific and custom switches, consult Customer Service Center.

Materials

MOVABLE CONTACTS:
Base metal: Phosphor bronze
Plating: Gold over nickel plate
FIXED CONTACTS:
Base metal: Brass
Plating: Gold over nickel plate
COVER: PA66 - Black
ACTUATOR: PPS - Black
BASE: PPS - Black
SUPPORT BRACKET (A1 Terminal Style only): Steel with tin plate

Build-A-Switch

To order, simply select desired option from each category and place in the appropriate box. Available options are shown and described on pages A-106 thru A-107. For additional options not shown in catalog, consult Customer Service Center.

F P 1 1 – S P – ☐ ☐ – B 1 – T P – ☐ ☐

Designation
FP11 SPST N.O.

Actuator Length
SP Standard plunger 3.3mm

Terminal Style
C1 Vertical
A1 Right Angle

Contact Plating
B1 Gold over nickel plate

Packaging
TP Tray packaging

Cap
00 No cap
01 White cap - bulk bagged
02 Black cap - bulk bagged
03 Red cap - bulk bagged

Dimensions are shown: Inches (mm)
Specifications and dimensions subject to change

FP Series
Sealed Ultra Miniature Pushbutton Switches

SWITCH FUNCTION

C1 VERTICAL

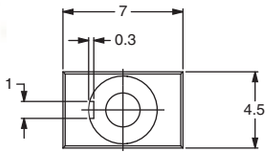

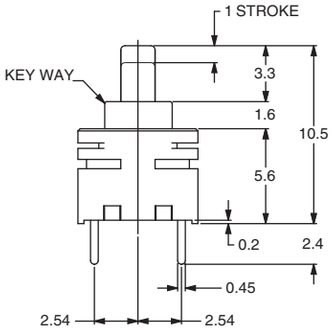

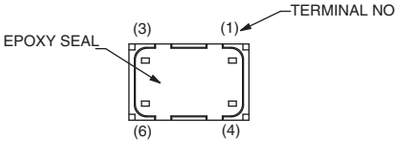

(4) AND (6) ARE SUPPORT TERMINALS

A1 RIGHT ANGLE

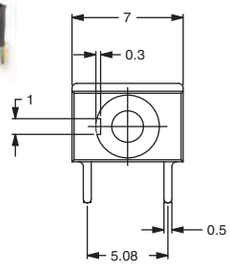

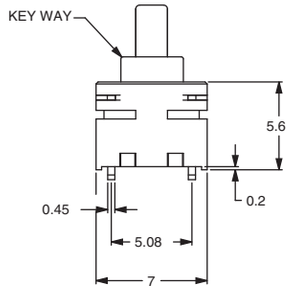

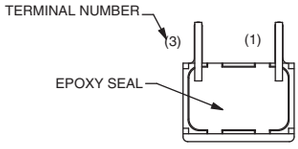

MODEL NO.	SWITCH FUNCTION POS. 1	SWITCH FUNCTION POS. 2
FP11	OFF	MOM
	CONNECTED TERMINALS	
	OPEN	1-3

SCHEMATIC SPST

ACTUATOR LENGTH

SP STANDARD PLUNGER 3.3MM

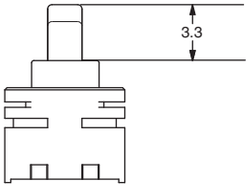

Third Angle Projection

Dimensions are shown: mm
Specifications and dimensions subject to change

TERMINAL STYLE

C1 VERTICAL

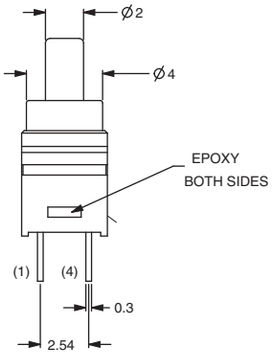

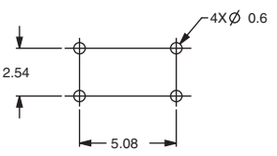

MOUNTING HOLE PATTERN

A1 RIGHT ANGLE

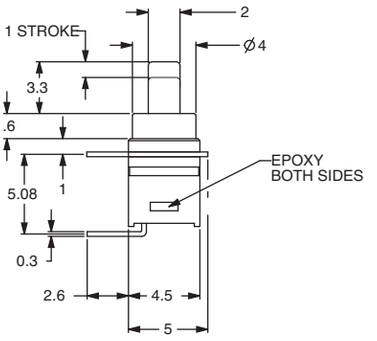

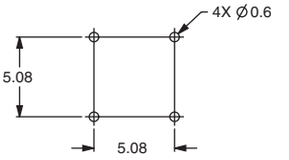

MOUNTING HOLE PATTERN

CONTACT PLATING

B1 GOLD OVER NICKEL PLATE

PACKAGING

TP TRAY PACKAGING

CAPS

OPTION CODE	DESCRIPTION
00	NO CAP
01	WHITE CAP, BULK BAGGED
02	BLACK CAP, BULK BAGGED
03	RED CAP, BULK BAGGED

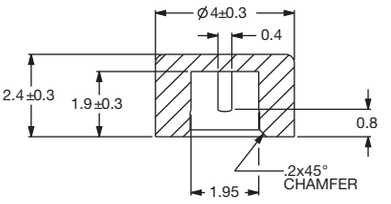

To purchase Caps separately without switch, please use these part numbers

PART #	COLOR
798D01000	WHITE
798D02000	BLACK
798D03000	RED

Third Angle Projection

Dimensions are shown: mm
Specifications and dimensions subject to change

AP Series
Industrial Pushbutton Switch

Features/Benefits

- *IP67 sealed*
- *1,000,000 life cycle*
- *Illumination / non-illumination*
- *Multiple colored caps*
- *Threaded or snap-in mounting*
- *Caps available separately*
- *RoHS compliant*

Typical Applications

- *Harsh environments*
- *Off-Road*
- *Industrial*
- *Medical*
- *Transportation*
- *Joystick control modules*
- *Gaming*
- *Military*

Specifications

FUNCTION: SPST Momentary
CONTACT ARRANGEMENT: N.O.
MOUNTING TYPE:
Snap-in (no panel seal)
Threaded body (hex nut, lock washer, and panel seal gasket provided)
Torque spec for threaded body: Do not exceed 8-9 in-lbs (0.9-1.0 N.m)

Mechanical

OPERATING LIFE: 1,000,000 cycles
TOTAL TRAVEL: 2.1 ± 0.2 mm
OPERATING POINT 1.55 ± 0.25 mm
OVER TRAVEL: 0.6 min.
OPERATING FORCE: 4N ± 1N standard configuration; other force option 2N ± 0.5N
VIBRATION: 10-500 Hz 10g Max
SHOCK: 60g 11ms sawtooth wave

Electrical

CONTACT RATING:
200mA @ 24 V DC resistive (500,000 cycles)
100mA @ 50 V DC resistive (500,000 cycles)
400mA @ 32 V AC resistive (500,000 cycles)
125mA @ 125 V AC resistive (1,000,000 cycles)
DIELECTRIC STRENGTH: 1000 V AC min.
INSULATION RESISTANCE: 1 G Ω @ 500 VDC
INITIAL CONTACT RESISTANCE 50 mΩ max (without wire leads)
BOUNCE TIME: <5 ms

Materials

HOUSING: PBT
BASE: PBT
CAP: PBT
ACTUATOR:
Illuminated: Clear polycarbonate
Non-illuminated: PBT
INTERNAL SEAL: Silicone rubber
TERMINALS: Copper alloy, gold over silver plating
MOVABLE CONTACT: Copper alloy, gold over silver plating
TERMINAL SEAL: Epoxy
WIRE LEADS: UL1569 Black 22 AWG

Operating Environment

OPERATING TEMPERATURE: -40˚C to 85˚C (+105˚C non-illuminated)
ESD PROTECTION: 20 KV min.

Process Environment

SEALING: IP67 for threaded body
IP65 for snap-in version (no panel seal)

NOTE: Specifications and materials listed above are for switches with standard options. For information on specific and custom switches, please contact Customer Service.

Build-A-Switch

To order, simply select desired option from each category and place in the appropriate box.

A P — — — — — — — B — E

Designation
AP AP Series

Operating Force
2 2 Newtons
4 4 Newtons

Actuator Style
D Dome / Convex
C Concave
E Extended Dome
N None

Actuator Color
0 No Cap
2 Black
3 Red
4 Orange
5 Yellow
6 Green
7 Blue
9 Gray

Please contact Customer Service for additional colors and paint / laser etched button options.

Illumination
00 No LED*
01 Super White
02 Bi-color; Red (Green)
03 Red
05 Amber
06 Green
07 Super Blue
08 Bi-color; Amber (Green)

* No LED available in short body only

Bushing Style**
S** Snap-in plastic
T Threaded plastic

** No panel seal option
*** PC terminals not available with illumination

Termination
Z Solder Lug
W 12" Wire Leads 22 AWG
C*** PC Terminals

Contact Material
B Gold

Terminal Seal
E Epoxy
All models are epoxy sealed

Contact Customer Service for additional hardware options.

Specifications and dimensions subject to change

STANDARD VIEW

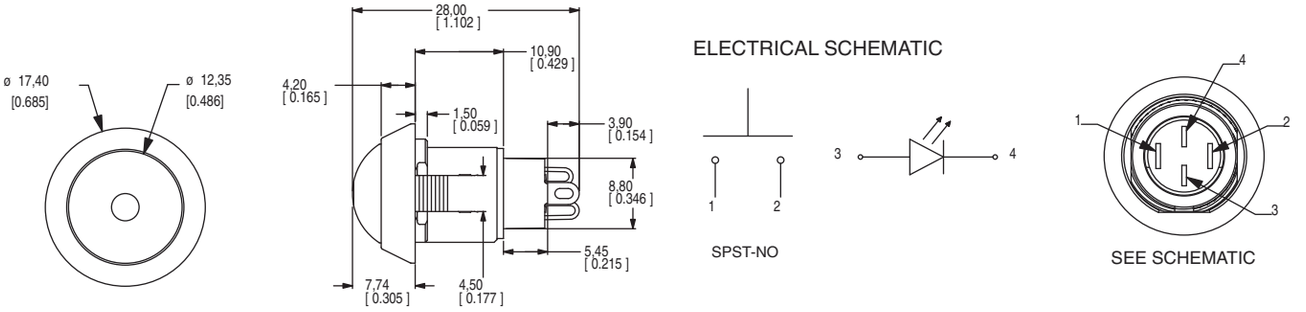

OPERATING FORCE

OPTION CODE	OPERATING FORCE
2	2 N, 200 g
4	4 N, 400 g

ACTUATOR STYLE

D DOME / CONVEX

E EXTENDED DOME

C CONCAVE

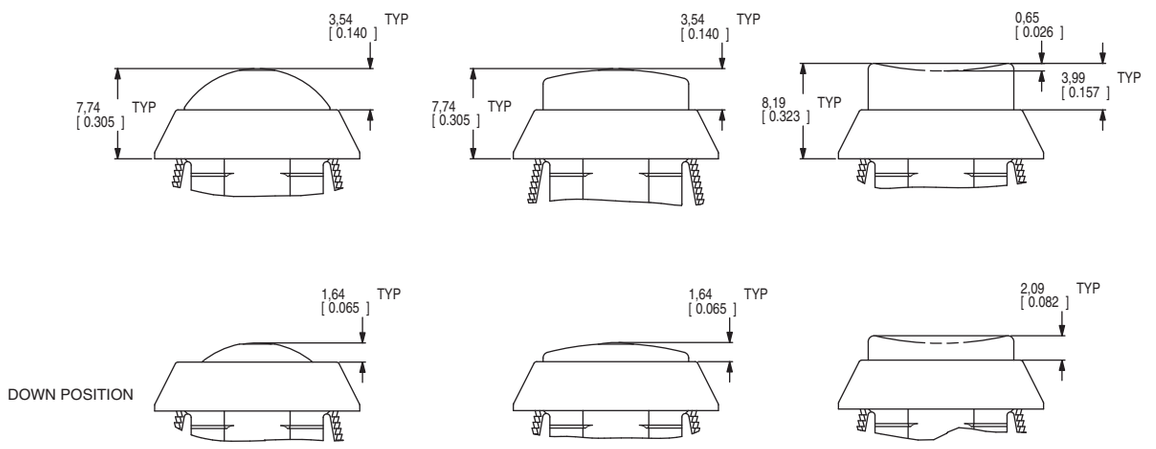

ACTUATOR COLOR

OPTION CODE	ACTUATOR COLOR
0	No Cap
2	Black
3	Red
4	Orange
5	Yellow
6	Green
7	Blue
9	Gray

For additional colors please contact Customer Service.

Third Angle Projection

Dimensions are shown: mm (inches
Specifications and dimensions subject to change

AP Series
Industrial Pushbutton Switch

ILLUMINATION

OPTION CODE	ILLUMINATION TYPE	TYPICAL INTENSITY* MIN	MAX	PEAK WAVELENGTH	Vf Forward Voltage
		(mcd)		(nm)	
00	Model without illumination	N/A		N/A	
01	LED Super White	4,000	5,000	N/A	3.5
02	LED Bi-Color – Red (Green)	10	20	635/565	2.0
03	LED Red	4	8	700	2.0
05	LED Amber	35	50	610	2.0
06	LED Green	35	50	565	2.0
07	LED Super Blue	800	1,500	470	3.8
08	LED Bi-Color – Amber (Green)	10	10	585/565	2.0

*LED FORWARD CURRENT: 20 mA
LED FORWARD VOLTAGE: see chart above
LED REVERSE VOLTAGE: 5.0 V MAX

* For information on specific and custom LED, please contact Customer Service.

NOTE:
For bi-color LED's the polarity must be reversed to alternate the color

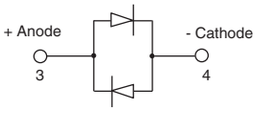

BUSHING STYLE

S SNAP-IN

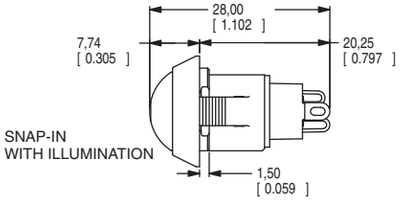

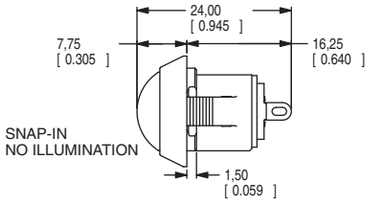

T THREADED PLASTIC

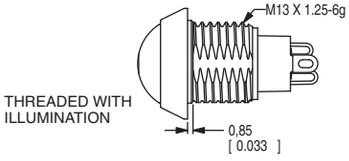

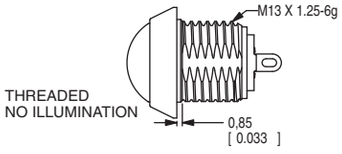

PANEL CUTOUT

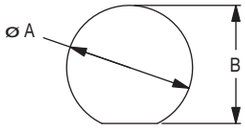

PANEL THICKNESS	DIM A (± 0.05 mm)	DIM B (± 0.05 mm)
1 mm [0.039 in]	13.70 mm [0.539 in]	13.00 mm [0.512 in]
2 mm [0.079 in]	13.80 mm [0.539 in]	13.00 mm [0.512 in]
3 mm [0.118 in]	13.90 mm [0.547 in]	13.10 mm [0.516 in]
THREADED BODY MIN PANEL THICKNESS 1 mm	13.70 mm [0.539 in]	13.00 mm [0.512 in]

Third Angle Projection

A 0.1mm min. chamfer on the leading edge of the mounting hole is recommended for snap-in version.

Dimensions are shown: mm (inches)
Specifications and dimensions subject to change

TERMINATION

Z SOLDER LUG

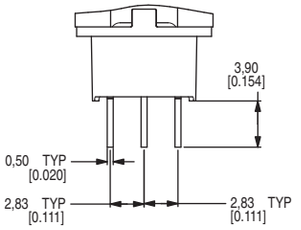

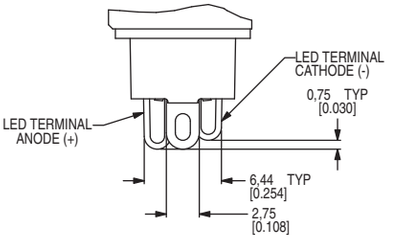

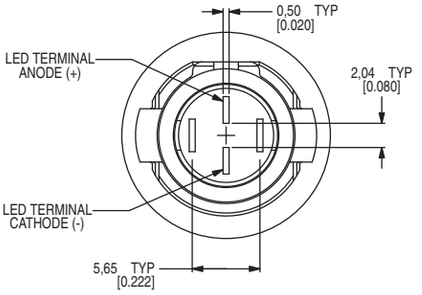

* Switching terminals are gold and LED terminals are silver

C PC TERMINALS

*** Illumination not available with PC Terminals

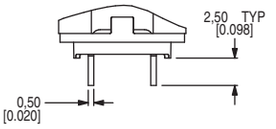

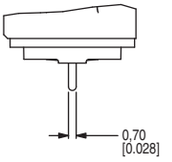

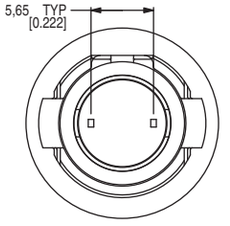

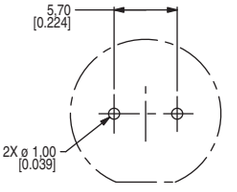

PCB HOLE PATTERN
BOARD VIEW

W 12" WIRE LEADS 22 AWG

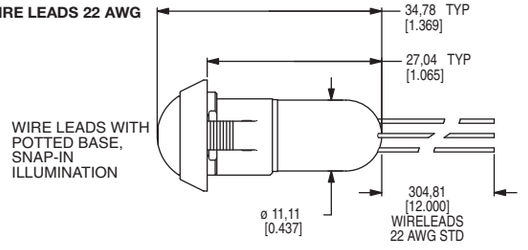

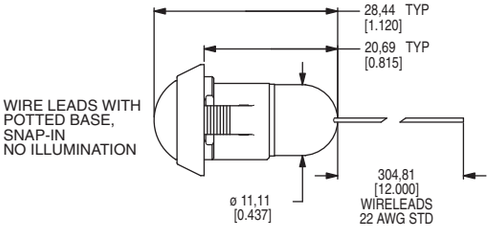

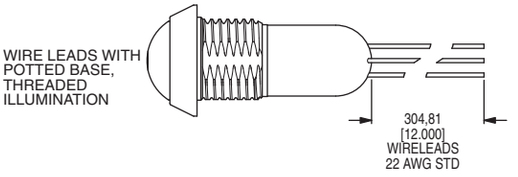

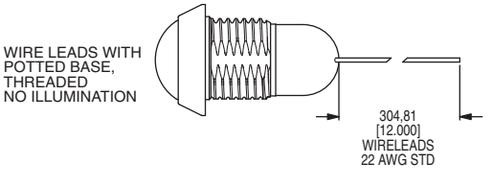

Wires: Black wires - Terminals
Red wires - LED (+) Positive
White wire - LED (-) Negative

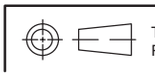

Third Angle
Projection

Dimensions are shown: mm (inches
Specifications and dimensions subject to change

AP Series
Industrial Pushbutton Switch

CONTACT MATERIAL

B GOLD

OPTION CODE	CONTACT MATERIAL
B	Gold

TERMINAL SEAL

E EPOXY

All models are epoxy sealed

HARDWARE

LOCK WASHER
Part Number 647D00000

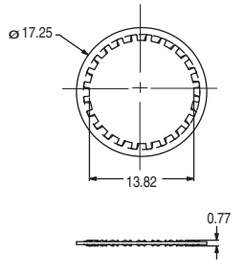

HEX NUT
Part number 515D00000

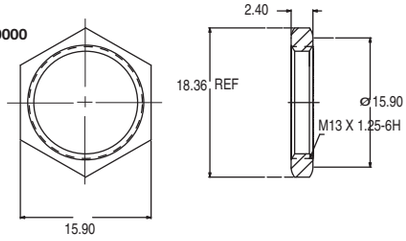

PANEL SEAL
Part Number 655D00000

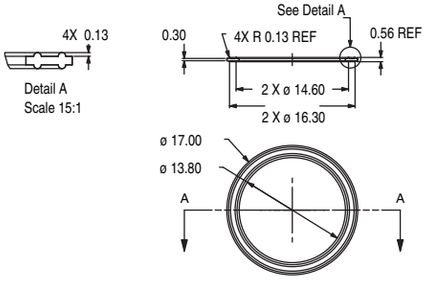

Caps available on next page

Third Angle Projection

Dimensions are shown: mm (inches)
Specifications and dimensions subject to change

AVAILABLE CAPS

481D XX XXX

Cap Color

Style

OPTION	CAP COLOR
01	WHITE
02	BLACK
03	RED
04	ORANGE
05	YELLOW
06	GREEN
07	BLUE
08	BROWN
09	GRAY

PART NUMBER	HOLE	STYLE
481DXX000	NO	DOME
481DXX001	YES	DOME
481DXX002	NO	EXTENDED DOME
481DXX003	YES	EXTENDED DOME
481DXX004	NO	CONCAVE
481DXX005	YES	CONCAVE

DOME

481DXX000 = NO HOLE
481DXX001 = HOLE

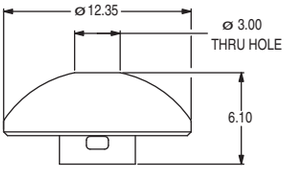

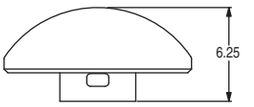

EXTENDED DOME

481DXX002 = NO HOLE
481DXX003 = HOLE

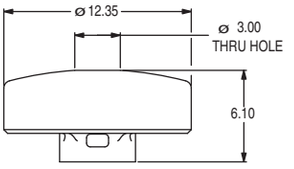

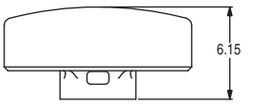

CONCAVE

481DXX004 = NO HOLE
481DXX005 = HOLE

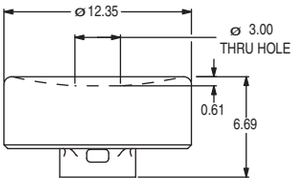

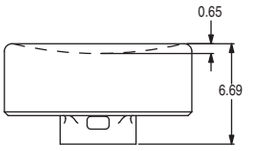

Third Angle Projection

Dimensions are shown: mm (inches)
Specifications and dimensions subject to change

APB Series
Backlit Pushbutton Switch

Features/Benefits

- *IP67 sealed*
- *1,000,000 life cycle*
- *Illumination*
- *Threaded or snap-in mounting*
- *RoHS compliant*

Typical Applications

- *Harsh environments*
- *Off-Road*
- *Industrial*
- *Medical*
- *Transportation*
- *Joystick control modules*
- *Gaming*
- *Military*

Specifications

FUNCTION: SPST Momentary
CONTACT ARRANGEMENT: N.O.
MOUNTING TYPE:
Snap-in (no panel seal)
Threaded body (hex nut, lock washer, and panel seal gasket provided)
Torque spec for threaded body: Do not exceed 8-9 in-lbs (0.9-1.0 N.m)

Mechanical

OPERATING LIFE: 1,000,000 cycles
TOTAL TRAVEL: 2.1 ± 0.2 mm
OPERATING POINT 1.55 ± 0.25 mm
OVER TRAVEL: 0.6 min.
OPERATING FORCE: 4N ± 1N standard configuration; other force option 2N ± 0.5N
VIBRATION: 10-500 Hz 10g Max
SHOCK: 60g 11ms sawtooth wave

Electrical

CONTACT RATING:
200mA @ 24 V DC resistive (500,000 cycles)
100mA @ 50 V DC resistive (500,000 cycles)
400mA @ 32 V AC resistive (500,000 cycles)
125mA @ 125 V AC resistive (1,000,000 cycles)
DIELECTRIC STRENGTH: 1000 V AC min.
INSULATION RESISTANCE: 1 G Ω @ 500 VDC
INITIAL CONTACT RESISTANCE 50 mΩ max (without wire leads)
BOUNCE TIME: <5 ms

Materials

HOUSING: PBT
BASE: PBT
CAP: Painted polycarbonate
ACTUATOR:
Illuminated: Clear polycarbonate
INTERNAL SEAL: Silicone rubber
TERMINALS: Copper alloy, gold over silver plating
MOVABLE CONTACT: Copper alloy, gold over silver plating
TERMINAL SEAL: Epoxy
WIRE LEADS: UL1569 Black 22 AWG

Operating Environment

OPERATING TEMPERATURE: -40˚C to 85˚C
ESD PROTECTION: 20 KV min.

Process Environment

SEALING: IP67 for threaded body
IP65 for snap-in version (no panel seal)

NOTE: Specifications and materials listed above are for switches with standard options. For information on specific and custom switches, please contact Customer Service.

Build-A-Switch

To order, simply select desired option from each category and place in the appropriate box.

A P B — [ ] — E — [ ][ ] — [ ] — [ ] — B — E — [ ][ ][ ]

Designation
APB APB Series

Operating Force
2 2 Newtons
4 4 Newtons

Cap
E Extended Dome (600E)

Illumination
01 Super White
07 Super Blue

Bushing Style
S Snap-in plastic
T Threaded plastic

Termination
Z Solder Lug
W 12" Wire Leads 22 AWG

Contact Material
B Gold

Terminal Seal
E Epoxy

Cap Symbol
000 Painted black over white without symbol*
001 Plus
002 Locked
003 Engine stop
004 Park brake release
005 Engine start
006 Fast
007 Slow
008 Unlocked
009 Rock shaft lower
010 Minus

* cap painted black over white to allow customer laser etching

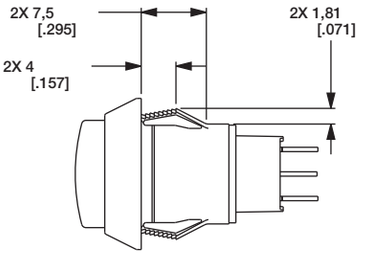

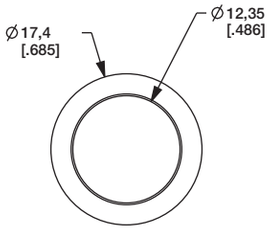

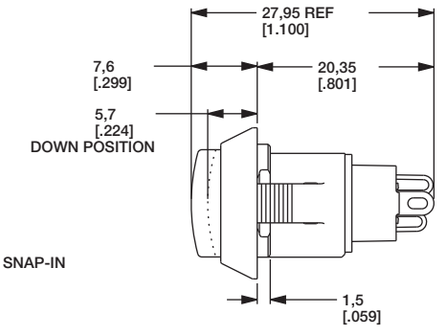

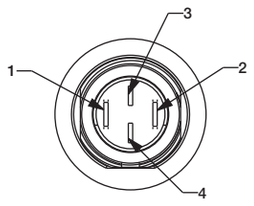

SEE SCHEMATIC

THREADED

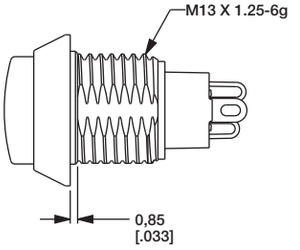

ELECTRICAL SCHEMATIC

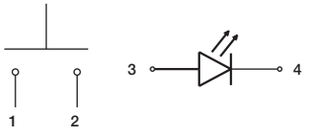

SPST-NO-DB

PANEL CUTOUT

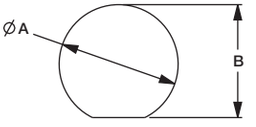

PANEL THICKNESS	DIM A (±0.05 MM)	DIM B (±0.05 MM)
1 MM [0.039 IN]	13.70 MM [0.539 IN]	13.00 MM [0.512 IN]
2 MM [0.079 IN]	13.80 MM [0.539 IN]	13.00 MM [0.512 IN]
3 MM [0.118 IN]	13.90 MM [0.547 IN]	13.10 MM [0.516 IN]
THREADED BODY MIN PANEL THICKNESS 1 MM	13.70 MM [0.539 IN]	13.00 MM [0.512 IN]

A 0.1 MM MIN CHAMFER ON THE LEADING EDGE OF MOUNTING HOLE IS RECOMMENDED FOR SNAP-IN VERSION.

Third Angle Projection

Dimensions are shown: Inches (mm)
Specifications and dimensions subject to change

APB Series
Backlit Pushbutton Switch

TERMINATION

W 12" WIRE LEADS

Z SOLDER LUG

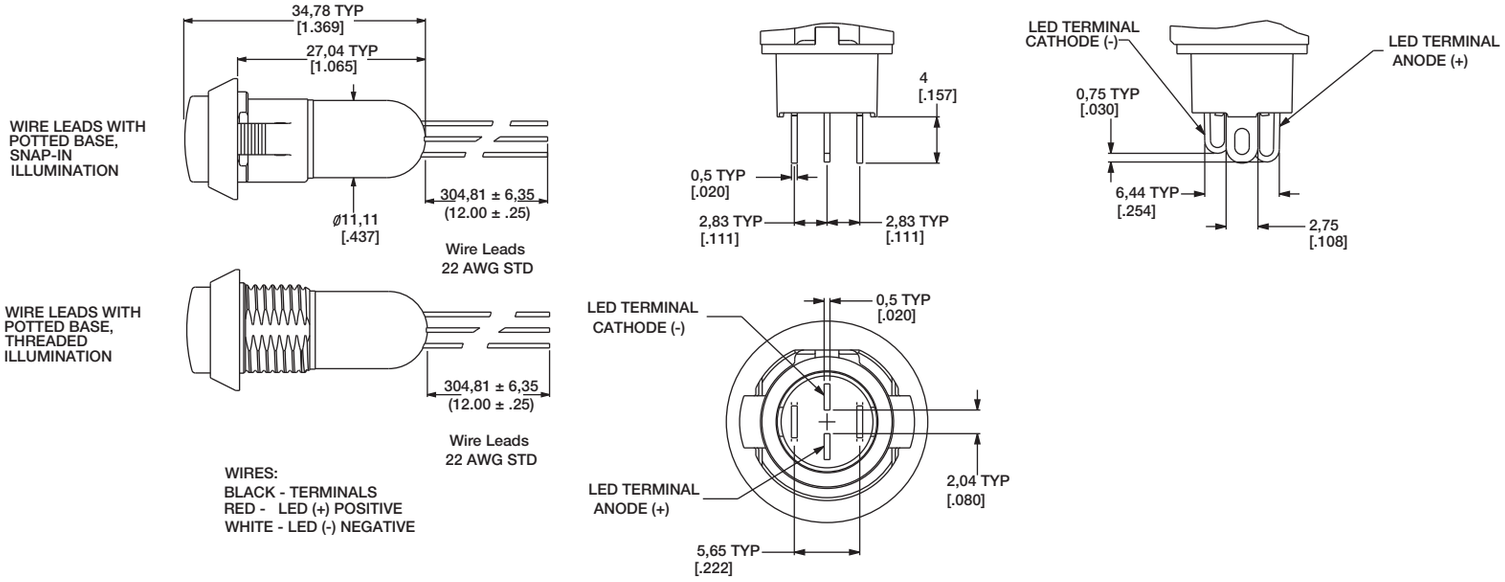

CONTACT MATERIAL

B GOLD

OPTION CODE	CONTACT MATERIAL
B	Gold

TERMINAL SEAL

E EPOXY

All models are epoxy sealed

Third Angle Projection

Dimensions are shown: Inches (mm)
Specifications and dimensions subject to change

CAP SYMBOLS

-000		NO SYMBOL
-001		PLUS
-002		LOCKED
-003	STOP	ENGINE STOP
-004		PARK BRAKE RELEASE
-005		ENGINE START
-006		FAST
-007		SLOW
-008		UNLOCKED
-009		ROCK SHAFT LOWER
-010		MINUS

NOTES:
1. ALL GRAPHICS MUST BE POSITIONED AS SHOWN, PERPENDICULAR TO ALIGNMENT FEATURE ON UNDERSIDE OF CAP.
2. GRAPHIC MARKING MUST BE ALIGNED WITH THE FLAT FEATURE ON THE UNDERSIDE OF THE CAP AS SHOWN, TOLERANCE ±3°

PANEL CUTOUT

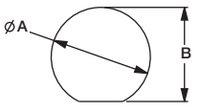

Panel Orientation
Flat indicates bottom

See chart on previous page for dimensions

HARDWARE

LOCK WASHER
Part Number 647D00000

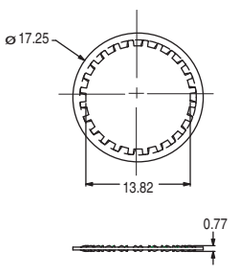

HEX NUT
Part number 515D00000

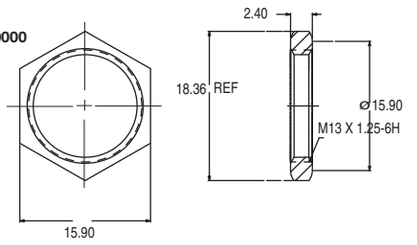

PANEL SEAL
Part Number 655D00000

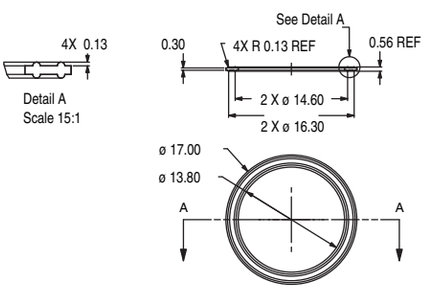

Third Angle Projection

Dimensions are shown: Inches (mm)
Specifications and dimensions subject to change

HP Series
Hall Effect Pushbutton Switch

Features/Benefits

- ***IP68 sealed***
- ***10,000,000 life cycle***
- ***Multiple colored caps***
- ***Redundant output available***

Typical Applications

- ***Harsh environments***
- ***Off-Road***
- ***Industrial***
- ***Medical***
- ***Transportation***
- ***Joystick control modules***
- ***Gaming***
- ***Military***

Specifications

FUNCTION: Linear output (See chart on next page)
MOUNTING TYPE: Front mount, Rear mount

Mechanical

MECHANICAL TRAVEL: 0.150 (3.81mm)
SHOCK: 60g 11ms sawtooth wave
VIBRATION: 10-500Hz 10g max.

Electrical

SUPPLY VOLTAGE: 5 ± 0.5 VDC
SUPPLY CURRENT: 10mA max.
OUTPUT CURRENT: 1mA max.
OUTPUT VOLTAGE: Programable from 0.5 -4.5V
ESD PROTECTION: 16kV per EIA-545

Materials

CASE / BUSHING: Anodized Aluminum
INSIDE HOUSING: PBT
CAP: PBT
ACTUATOR: PBT

Operating Environment

OPERATING TEMPERATURE: -40˚C to 85˚C
OPERATING LIFE: 10,000,000 cycles
SEALING: IP68S

NOTE: Specifications and materials listed above are for switches with standard options. For information on specific and custom switches, please contact Customer Service.

Build-A-Switch

To order, simply select desired option from each category and place in the appropriate box.

H P — ☐ — ☐ — ☐ — ☐ — ☐ — ☐ — ☐ — ☐ — ☐

Designation
HP HP Series

Bushing / Mounting Style
1 Front mount, 5/8-24 thread
2 Rear mount, 5/8-24 thread
3 Rear mount, 15/32-32 thread

Cap Style
1 ø .625 Dome (front mount only)
2 ø .370 Flat

Sensor Configuration
S Single Output
D Dual Output, Output 2 mirrors Output 1 (see figure 1)

Output Voltage Code
1 V1= 1.0V, V2= 4.0V
2 V1= 4.0V, V2= 1.0V
3 V1= 0.5V, V2= 4.5V
4 V1= 4.5V, V2= 0.5V

Actuation Force
S 2.7lb (12N)

Termination Style
W 12" wire leads, 22 AWG XLPE (26 AWG for Dual Output)

Cap Color
1 White
2 Black (STD)
3 Red
4 Orange
5 Yellow

Bushing Finish
1 Clear anodize
2 Black anodize (STD)

Hardware
0 No hardware
1 Plated hardware (STD)
2 Stainless hardware

Please contact Customer Service for additional options.

STANDARD VIEW

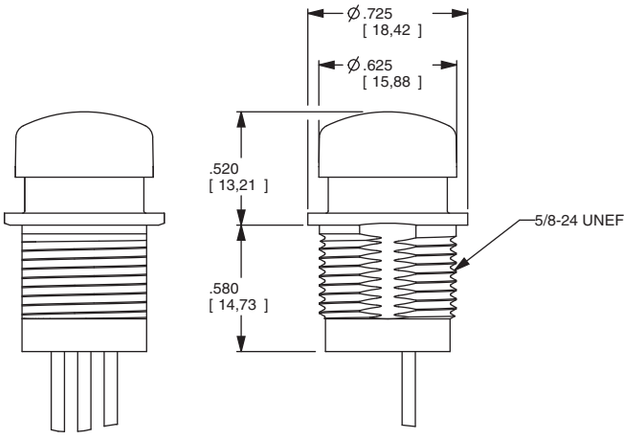

HP11

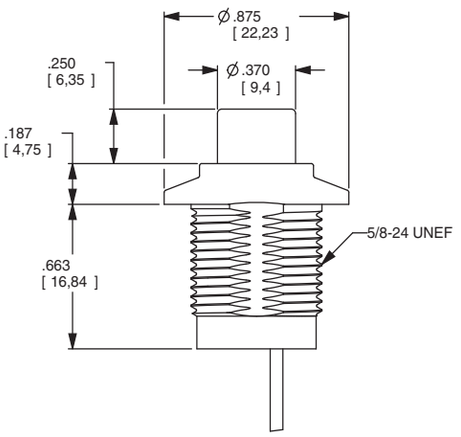

HP12

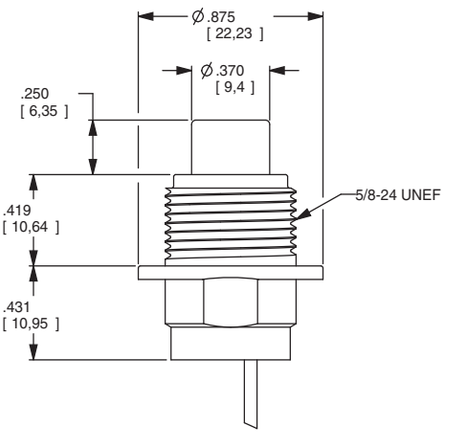

HP22

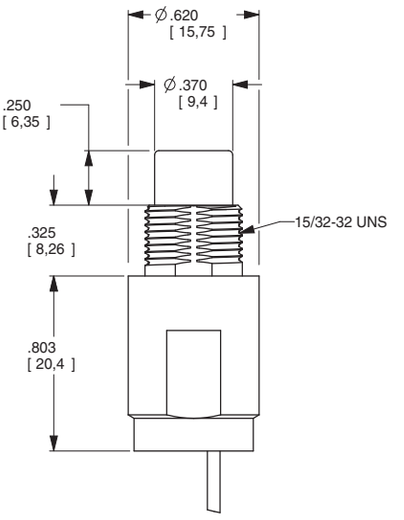

HP32

FIGURE 1: OUTPUT VOLTAGE

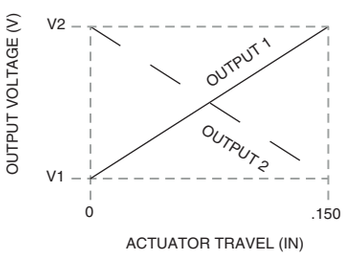

FIGURE 2- SCHEMATIC

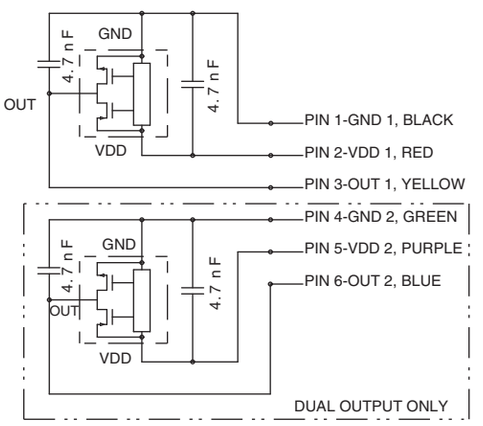

Third Angle Projection

Dimensions are shown: Inches (mm)
Specifications and dimensions subject to change

NP Series
Sealed Industrial Pushbutton Switch

Features/Benefits

- ***IP68 sealed***
- ***1,000,000 life cycle***
- ***Multiple housing styles***
- ***Capable of up to 5A resistive load***
- ***Wirelead options available***
- ***RoHS compliant***

Typical Applications

- ***Harsh environments***
- ***Off-Road***
- ***Industrial***
- ***Transportation***
- ***Military***

Specifications

FUNCTION: SPDT Double Break (Form Z) Momentary
CONTACT ARRANGEMENT: N.O. and N.C.
MOUNTING TYPE: Threaded front or rear mount and slot mount
TORQUE SPEC FOR THREADED BODY: Do not exceed 50 in-lbs (5.65 N-m)

Mechanical

OPERATING LIFE: 1,000,000 cycles
TOTAL TRAVEL: 1.6 ± 0.15 mm
OPERATING POINT 0.9 ± 0.25 mm
OVER TRAVEL: 0.45 min.
OPERATING FORCE: 8N ± 1.5N
VIBRATION: 10-500 Hz 10g Max
SHOCK: 50g 11ms sawtooth wave

Electrical

CONTACT RATING:
Option G - Gold over Silver
10mA/5 VDC (1,000,000 cycles)
Option Q - Silver
1A/32 VDC resistive (100,000 cycles)
5A/32 VDC resistive (25,000 cycles)
3A/32 VDC resistive (25,000 cycles)

Electrical (cont.)

DIELECTRIC STRENGTH: 1000 V AC for 1 min.
INSULATION RESISTANCE: 1 G Ω @ 500 VDC
INITIAL CONTACT RESISTANCE 50 mΩ max (without wire leads)
BOUNCE TIME: <5 ms

Materials

HOUSING: 6061-T6 Aluminum, black or clear anodized
BASE: PBT
CAP: PBT
ACTUATOR: PBT
INTERNAL SEAL: Silicone rubber
TERMINALS: Copper with silver nickel inlay, silver plating
MOVABLE CONTACT: Copper alloy, gold over silver plating
TERMINAL SEAL: Epoxy

Operating Environment

OPERATING TEMPERATURE: -40˚C to +85˚C
ESD PROTECTION: 15KV min.

Process Environment

SEALING: IP68

NOTE: Specifications and materials listed above are for switches with standard options. For information on specific and custom switches, please contact Customer Service.

Build-A-Switch

To order, simply select desired option from each category and place in the appropriate box.

N P — 8 — ☐ — ☐ — ☐ — ☐ — ☐ — ☐ — E

Designation
NP NP Series

Operating Force
8 8 Newtons

Actuator Style
S Standard
E Extended (D housing style only)

Actuator Color*
2 Black (STD)
3 Red
4 Orange
5 Yellow
9 Gray

* Please contact Customer Service for additional colors.

Housing Style
T Standard threaded mount
L Long threaded mount
H Short threaded mount
S Slot mount
R Rear mount
D Dome bezel
P Tapered bezel

Housing Anodizing Color
1 Clear anodized
2 Black anodized (STD)

Termination
03 Solder Lug (STD)
02 PC Pin (G Contact Material)
W4 4x 12" 22 AWG UL1569 wire (overmolded)
W3 3x 12" 22 AWG UL1569 wire (overmolded)

Contact Material
Q Silver (STD)
G Gold over silver

Terminal Seal
E Epoxy
All models are epoxy sealed

STANDARD VIEW

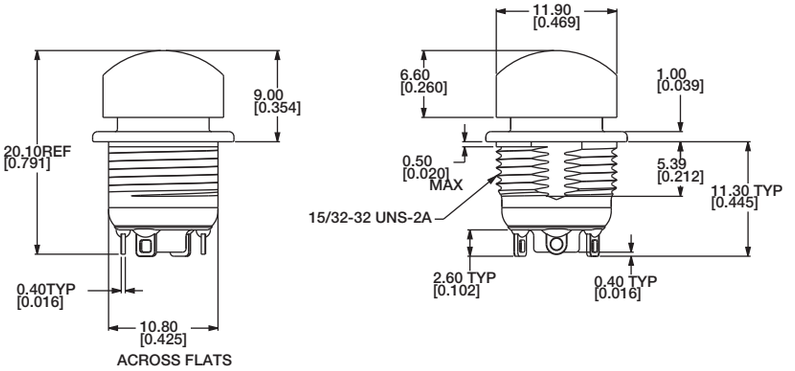

ELECTRICAL SCHEMATIC

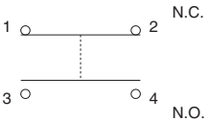

OPERATING FORCE

OPTION CODE	OPERATING FORCE
8	8 N

ACTUATOR STYLE

S STANDARD

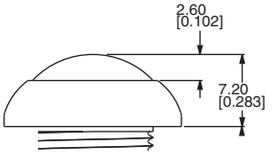

E EXTENDED (D HOUSING STYLE ONLY)

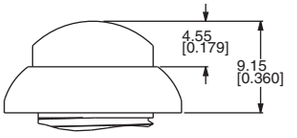

ACTUATOR COLOR

OPTION CODE	ACTUATOR COLOR
2	Black
3	Red
4	Orange
5	Yellow
9	Gray

For additional colors please contact Customer Service.

Third Angle Projection

Dimensions are shown: mm (inches)
Specifications and dimensions subject to change

NP Series
Sealed Industrial Pushbutton Switch

HOUSING STYLE

T STANDARD THREADED MOUNT

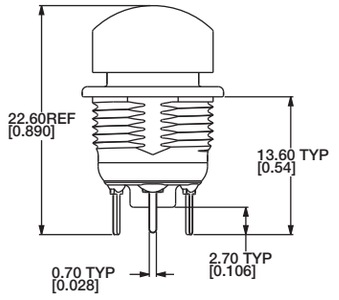

PC TERMINALS

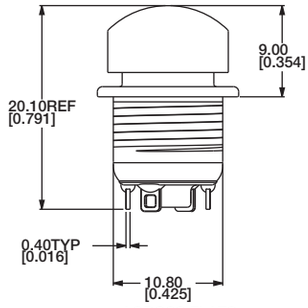

ACROSS FLATS

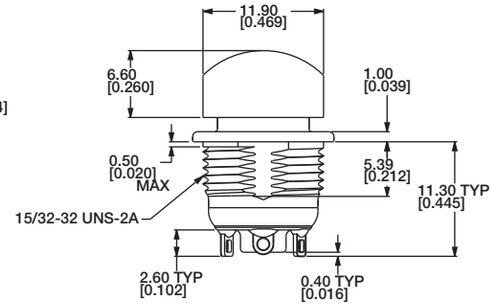

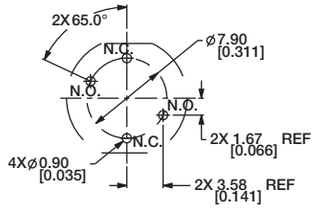

PC HOLE PATTERN
BOARD VIEW

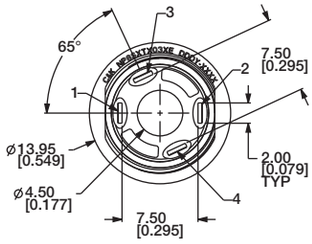

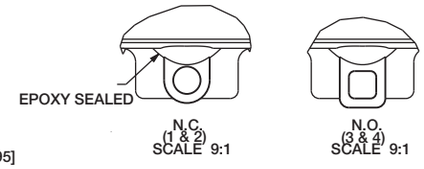

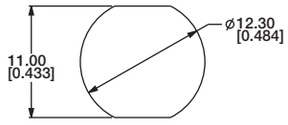

PANEL CUTOUT

L LONG THREADED MOUNT

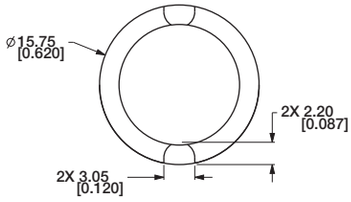

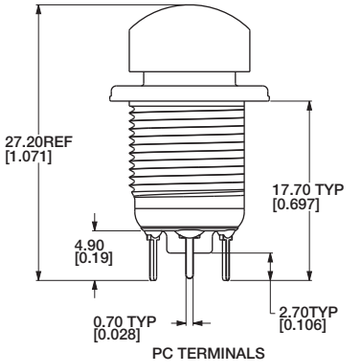

PC TERMINALS

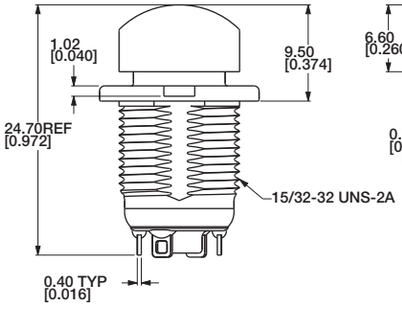

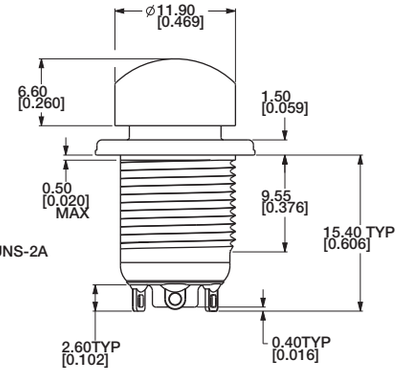

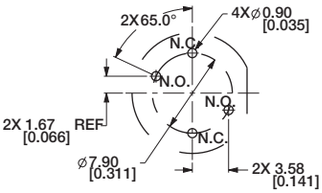

PC HOLE PATTERN
BOARD VIEW

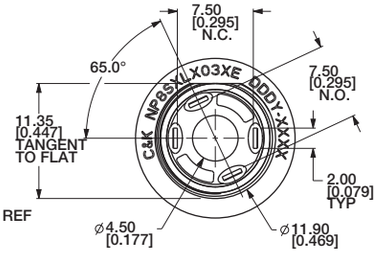

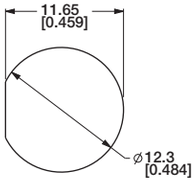

PANEL CUTOUT

Third Angle
Projection

Dimensions are shown: mm (inches)
Specifications and dimensions subject to change

HOUSING STYLE

H SHORT THREADED MOUNT

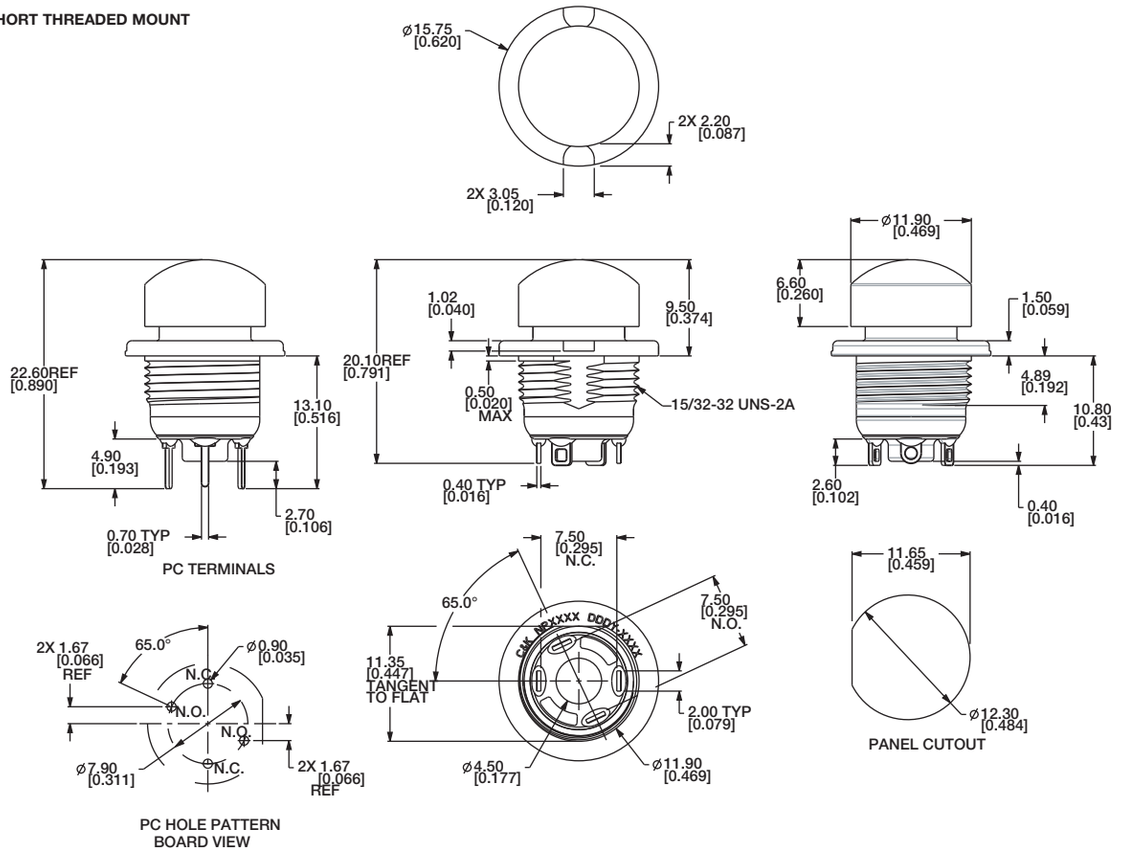

S SLOT MOUNT

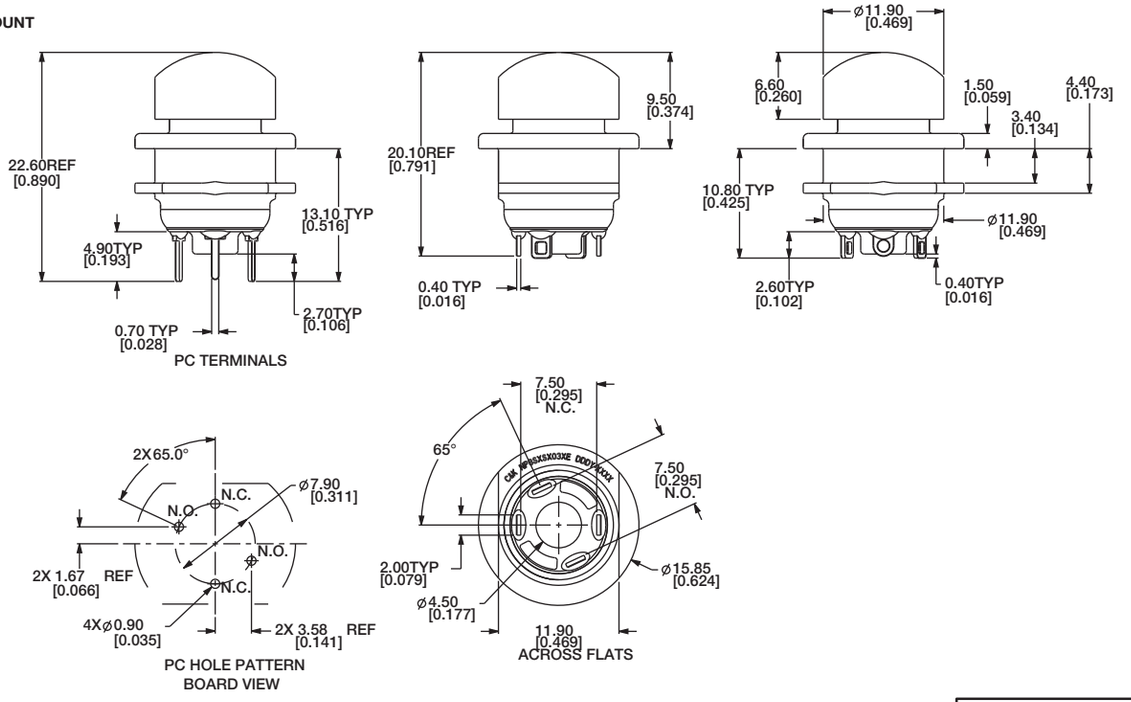

Third Angle
Projection

Dimensions are shown: mm (inches)
Specifications and dimensions subject to change

NP Series
Sealed Industrial Pushbutton Switch

HOUSING STYLE

R REAR MOUNT

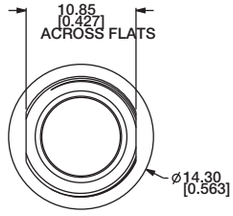

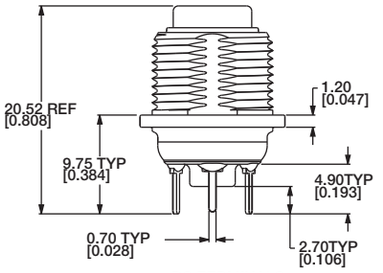

PC TERMINALS

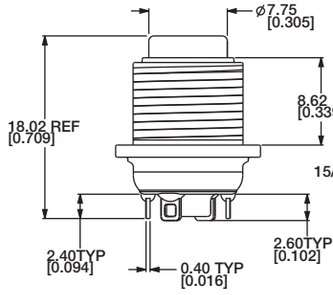

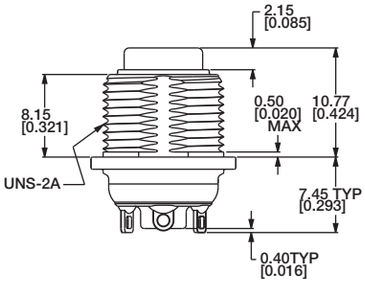

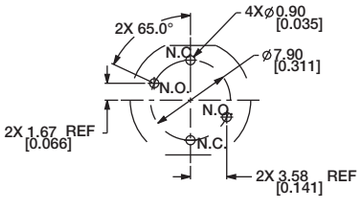

PC HOLE PATTERN
BOARD VIEW

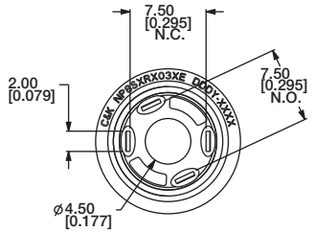

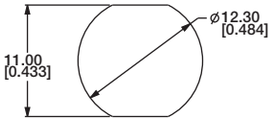

PANEL CUTOUT

D DOME BEZEL

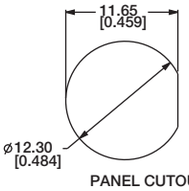

PANEL CUTOUT

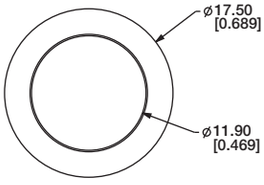

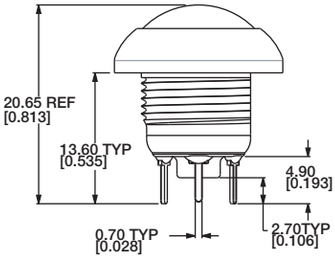

PC TERMINALS

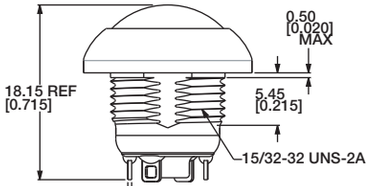

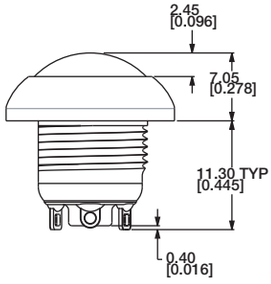

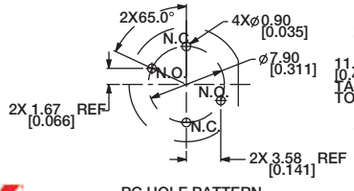

PC HOLE PATTERN
BOARD VIEW

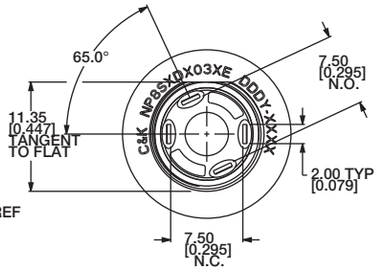

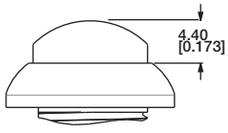

EXTENDED CAP

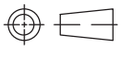

Third Angle
Projection

Dimensions are shown: Inches (mm)
Specifications and dimensions subject to change

HOUSING STYLE

P TAPERED BEZEL

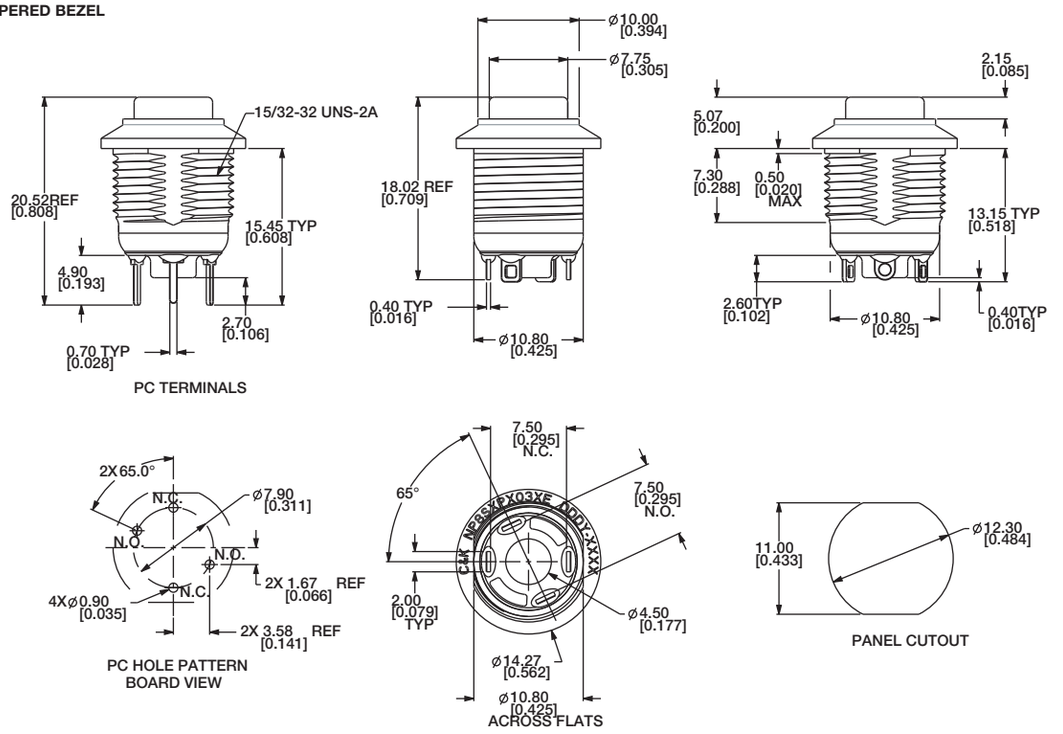

HOUSING ANODIZING COLOR

OPTION CODE	ANODIZING COLOR
1	Clear anodized
2	Black anodized (STD)

TERMINATION

03 SOLDER LUG (STD)

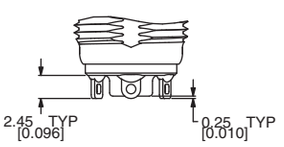

02 PC PIN (G CONTACT MATERIAL)

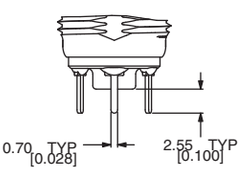

Third Angle Projection

Dimensions are shown: Inches (mm)
Specifications and dimensions subject to change

NP Series
Sealed Industrial Pushbutton Switch

TERMINATION

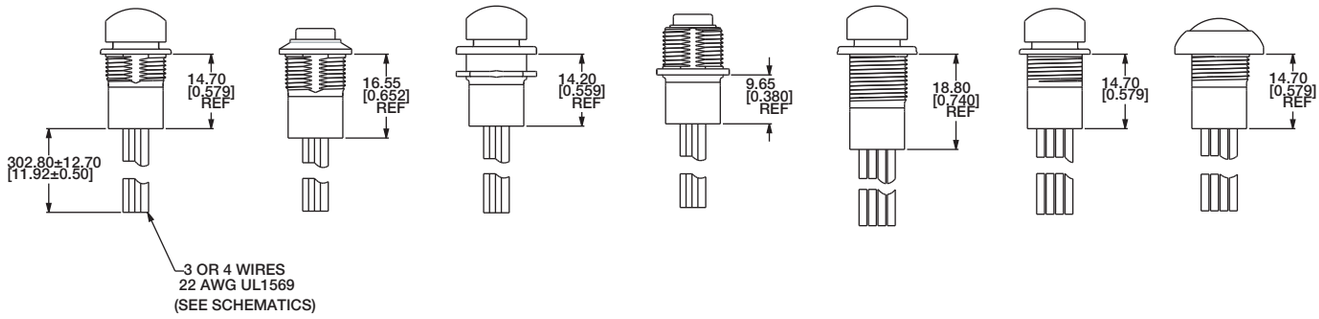

W3 3X 12" 22 AWG UL1569 WIRE (OVERMOLDED)

W4 4X 12" 22 AWG UL1569 WIRE (OVERMOLDED)

ELECTRICAL SCHEMATIC - 3 WIRES

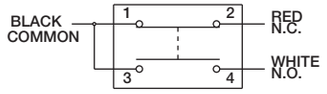

ELECTRICAL SCHEMATIC - 4 WIRES

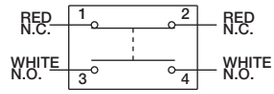

CONTACT MATERIAL

OPTION CODE	CONTACT MATERIAL
Q	Silver (STD)
G	Gold over Silver

TERMINAL SEAL

E EPOXY

All models are epoxy sealed

HARDWARE

HEX NUT

707100201 Nickel-plated

LOCKWASHER

700302202

PANEL GASKET

851D02000

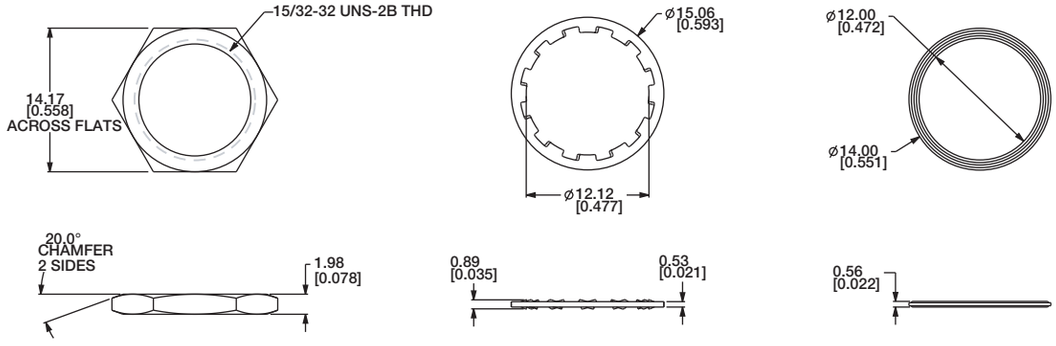

Third Angle Projection

Dimensions are shown: mm (inches)
Specifications and dimensions subject to change

PBA Series
Illuminated Pushbutton

Features/Benefits

- ***Illuminated display***
- ***Small size***
- ***Cold lighting***
- ***Tactile feed back***

Typical Applications

- ***Avionics***

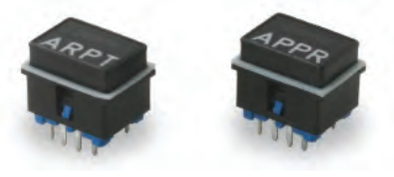

Mechanical

ACTUATION FORCE: 5,5 N ± 0,5 N
MAXIMUM FORCE: 80 N
TRAVEL TO CONTACT: 1,2 ± 0,1 mm
OVERTRAVEL: >0,3 mm
TOTAL TRAVEL: 1,5 ± 0,1 mm
LIFE EXPECTANCY: 10^6 operations 28 V - 10 mA
WEIGHT: 2 grams
VIBRATION: ± 0,45mm from 33 Hz to 75 Hz
ACCELERATION: 10 g max

Electrical

CONTACTS: Gold plated
VOLTAGE: Max 100 V - Min 20 mV DC
CARRYING CURRENT: Max 250 mA - Min 50 µA
SWITCHING CURRENT: Max 50 mA - Min 50 µA
MAX SWITCHING POWER: 1 W
CONTACT RESISTANCE: < 50 Ω
DIELECTRIC STRENGTH: 500 V rms
INSULATION RESISTANCE (100 V): > 5000 M Ω
BOUNCE: < 3 ms
SWITCHING OF 2 POLES MATCHING: < 10 ms

Environmental Data

STORAGE TEMPERATURE: -55˚C TO 85˚C
OPERATING TEMPERATURE: -30˚C TO 85˚C
TEMPERATURE OF KEY TO CAP: < Ambiant +25˚C
HUMIDITY TEST: 21 days (-40˚C - 93% HR)
ALTITUDE PRESSURE: From 20 hPa to 1070 hPa

Soldering Data

WAVE SOLDERING: 260˚C / 5s
MANUAL SOLDERING: 350˚C / 2s
SEALING: According to IP64

Plastic Material

Housing and Cap: UL-94 V0

NOTE: Specifications and materials listed above are for switches with standard options. For information on specific and custom switches, please contact Customer Service.

Build-A-Switch

To order, simply select desired option from each category and place in the appropriate box.

P B A — [ ] — [ ] — [ ] — [ ] — [ ] — Repeat sequence for 2nd Marking — [ ] [ ]

Designation
PBA PBA Series

Size
1 9,5 x 14
2 11,5 x 14
3 14 x 14

Marking Location
H High
M Middle
L Low

Type of Marking
T Text / Legend
S Status Indicator

LED Color
0 White λ
1 Green λ 560 nm
2 Yellow Green λ 568 nm
3 Amber λ 590 nm
4 Red λ 660 nm
5 Other λ

Display Type

		LED Non-Illuminated	LED Illuminated
N	Text Marking	White	LED Color
	Background	Black	Black
S	Text Marking	Not visible	LED Color
	Background	Black	Black
R	Text Marking	White	LED Color
	Background	Red	Red
G	Text Marking	Green	Green
	Background	Black	Black

LED Supply or Type
AC Alternative
DC Direct
XX for each marking
1:6 LEDs in parallel
for direct current

Dimensions are shown: mm (inches)
Specifications and dimensions subject to change

PBA Series
Illuminated Pushbutton

LIGHTING DATA

The legends of function and the status indicator can be illuminated separately.

Color		Amber	Green
Wave Length		586 < λ < 592	555 < l < 560
Current Max		80 mA	80 mA
Chromaticity	X Y	0,54 < X < 0,58 0,40 < Y < 0,44	0,30 < X < 0,40 0,6 < Y
Contrast Min.		1,2	0,85

For other colors and displays, please contact Customer Service.

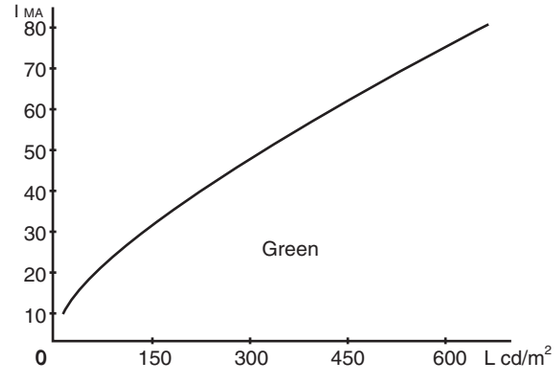

LIGHTING / CURRENT

DIMENSIONS (applicable for any size)

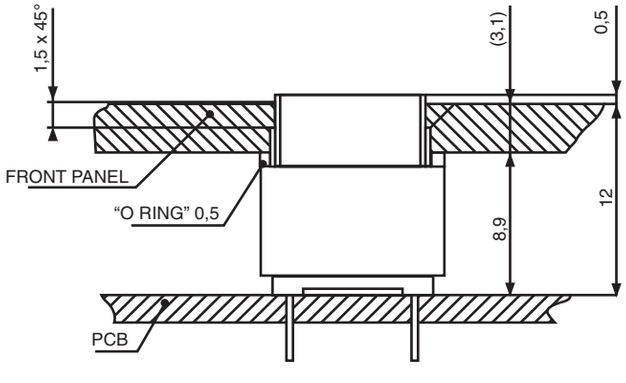

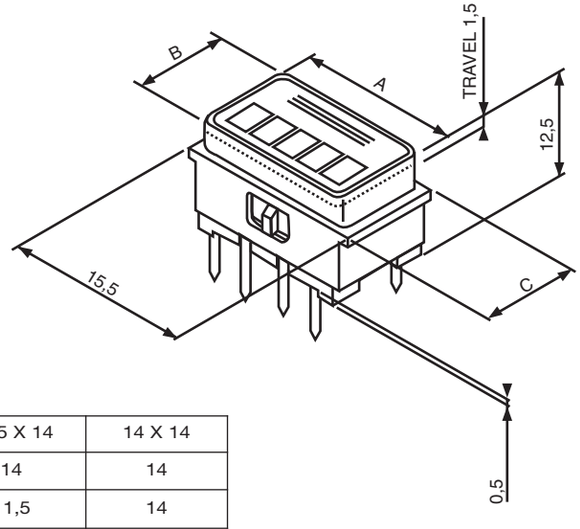

	9,5 X 14	11,5 X 14	14 X 14
A	14	14	14
B	9,5	11,5	14
C	11	11,5	15,5

Tolerance: ± 0,1 mm

Dimensions are shown: mm
Specifications and dimensions subject to change

LED MODULE LAYOUT

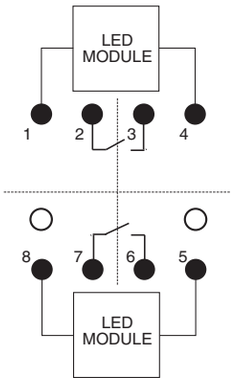

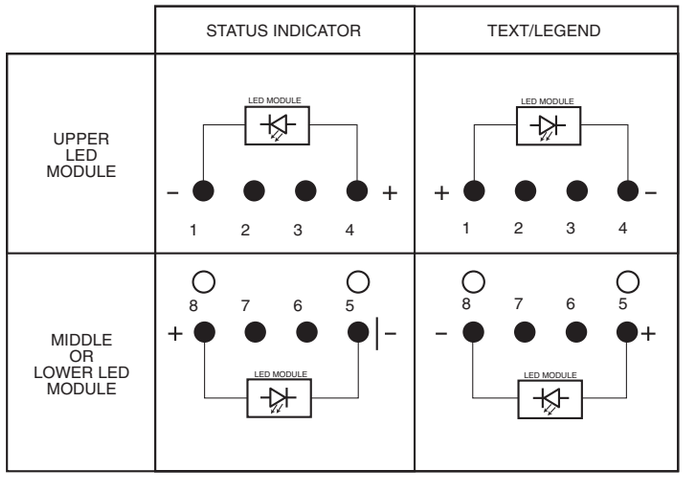

PCB Layout

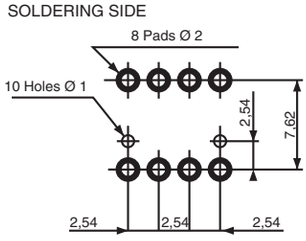

TOLERANCE: ± 0,1

APPLICABLE FOR SIZE
- 9,5 x 14 mm
- 11,5 x 14 mm

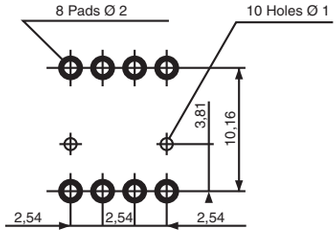

APPLICABLE FOR SIZE
-14 x 14 mm

TACTILE EFFECT

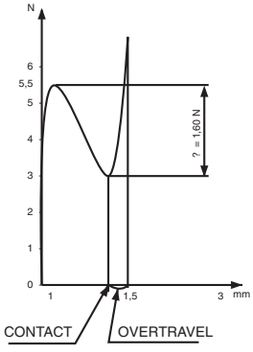

TRAVEL
- TRAVEL TO CONTACT: 1,2 ± 0,1 mm
- OVERTRAVEL: > 0,3 mm
- TOTAL TRAVEL: 1,5 ± 0,1 mm

FORCE
- ACTUATOR FORCE: 5,5 N ± 0,5 N
- TACTILE FEELING: 1,6 N

1 or 2 markings are available in any combination of text / legend or status indicator.

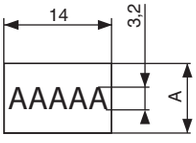

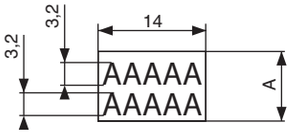

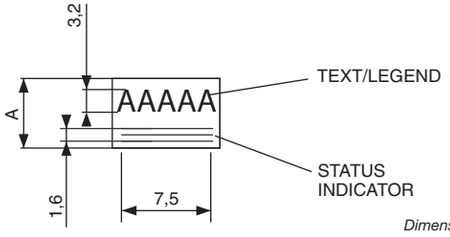

A = 9,5 or 11,5 or 14mm

Dimensions are shown: mm
Specifications and dimensions subject to change

PB Series
Single Pole and Multi-Key Pushbutton Switches

Features/Benefits

- ***Momentary or latching options***
- ***Reliable contact design***
- ***2, 4, and 6 pole configurations***
- ***Long travel and extended life cycles***

Typical Applications

- ***Appliances***
- ***Audio and visual equipment***
- ***Consumer electronics***
- ***Industrial equipment***

Specifications

CONTACT RATING: 0.3A @ 30 VDC

INITIAL CONTACT RESISTANCE: 30 m ohms max.

INSULATION RESISTANCE: 100 M ohms min.

DIELECTRIC STRENGTH: 500 V AC (50-60 Hz) between open terminals and between the frame and terminal.

OPERATING LIFE: 10,000 cycles without load

OPERATING FORCE:
250 ± 100 gf (2.45 ± 0.98N)

LOCK TRAVEL: 2 ± 0.3 mm

TOTAL TRAVEL: 3 ± 0.3 mm

OPERATING TEMPERATURE: -20˚C to 70˚C

Materials

CASE: PC (UL 94HB)

PLASTIC CLIP: POM (UL 94HB)

SPRING: SUS

KNOB: POM

TERMINAL: Silver plated

PB-22D01-L 2PDT LOCK / LATCHING

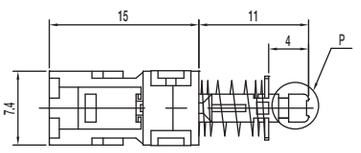

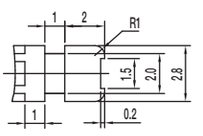

P DETAIL 2 : 1

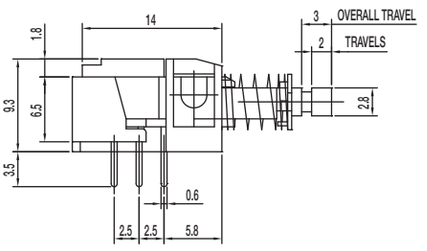

2P — 2T

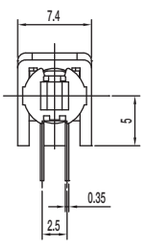

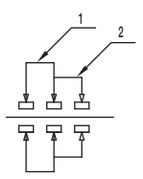

SCHEMATIC

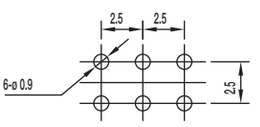

PIERCING PLAN

PB Series
Single Pole and Multi-Key Pushbutton Switches

PB-42D01-L 4PDT LOCK / LATCHING

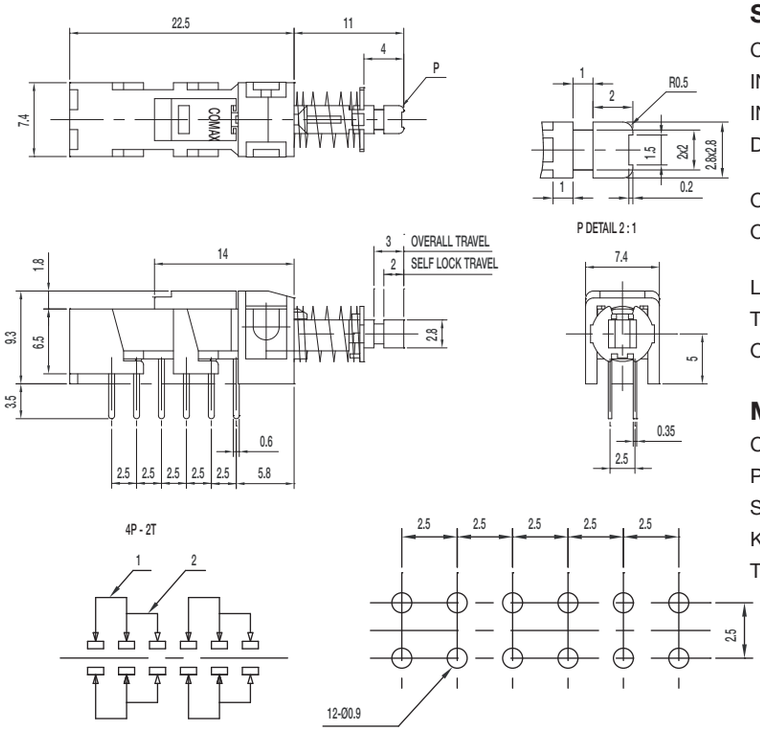

Specifications

CONTACT RATING: 0.3A @ 30 VDC

INITIAL CONTACT RESISTANCE: 30 m ohms max.

INSULATION RESISTANCE: 100 M ohms min.

DIELECTRIC STRENGTH: 500 V AC (50-60 Hz) between open terminals and between the frame and terminal.

OPERATING LIFE: 10,000 cycles without load

OPERATING FORCE:
280 ± 100 gf

LOCK TRAVEL: 2 ± 0.3 mm

TOTAL TRAVEL: 3 ± 0.3 mm

OPERATING TEMPERATURE: -20˚C to 70˚C

Materials

CASE: PC (UL 94HB)

PLASTIC CLIP: POM (UL 94HB)

SPRING: SUS

KNOB: POM

TERMINAL: Silver plated

PB-62D01-L 6PDT LOCK / LATCHING

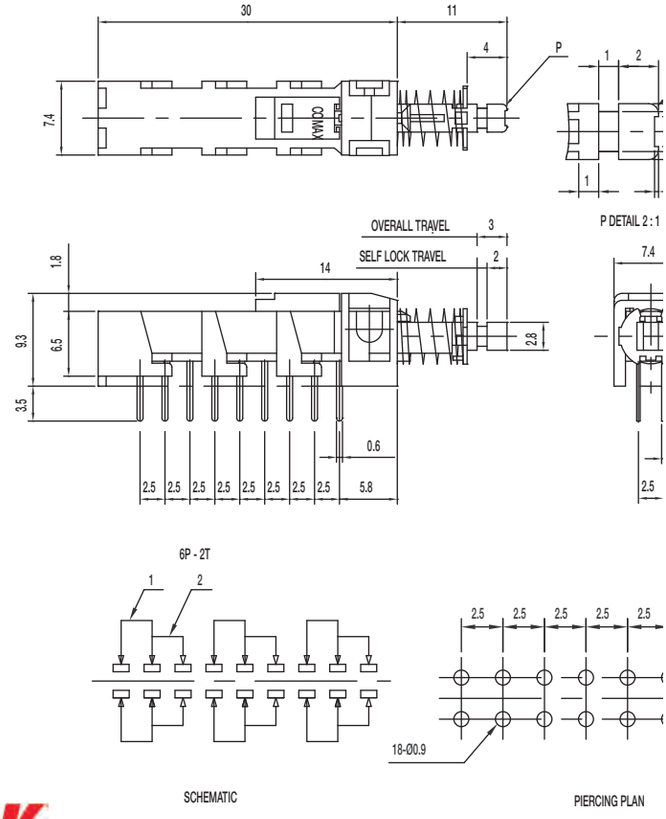

Specifications

CONTACT RATING: 0.3A @ 30 VDC

INITIAL CONTACT RESISTANCE: 30 m ohms max.

INSULATION RESISTANCE: 100 M ohms min.

DIELECTRIC STRENGTH: 500 V AC (50-60 Hz) between open terminals and between the frame and terminal.

OPERATING LIFE: 10,000 cycles without load

OPERATING FORCE:
300 ± 100 gf (2.94 ± 0.98N)

LOCK TRAVEL: 2 ± 0.3 mm

TOTAL TRAVEL: 3 ± 0.3 mm

OPERATING TEMPERATURE: -20˚C to 70˚C

Materials

CASE: PC (UL 94HB)

PLASTIC CLIP: POM (UL 94HB)

SPRING: SUS

KNOB: POM

TERMINAL: Silver plated

Dimensions are shown: mm
Specifications and dimensions subject to change

PB-22D01-F 2PDT NON-LOCK / MOMENTARY

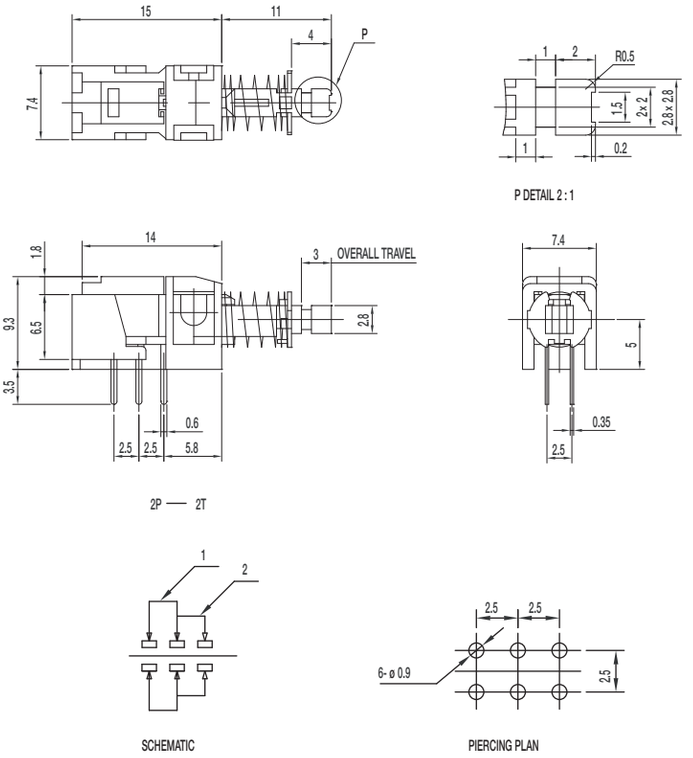

Specifications

CONTACT RATING: 0.3A @ 30 VDC

INITIAL CONTACT RESISTANCE: 30 m ohms max.

INSULATION RESISTANCE: 100 M ohms min.

DIELECTRIC STRENGTH: 500 V AC (50-60 Hz) between open terminals and between the frame and terminal.

OPERATING LIFE: 10,000 cycles without load

OPERATING FORCE:
250 ± 100 gf (2.45 ± 0.98N)

TOTAL TRAVEL: 3 ± 0.3 mm

OPERATING TEMPERATURE: -20˚C to 70˚C

Materials

CASE: PC (UL 94HB)

PLASTIC CLIP: POM (UL 94HB)

SPRING: SUS

KNOB: POM

TERMINAL: Silver plated

PB-42D01-F 4PDT NON-LOCK / MOMENTARY

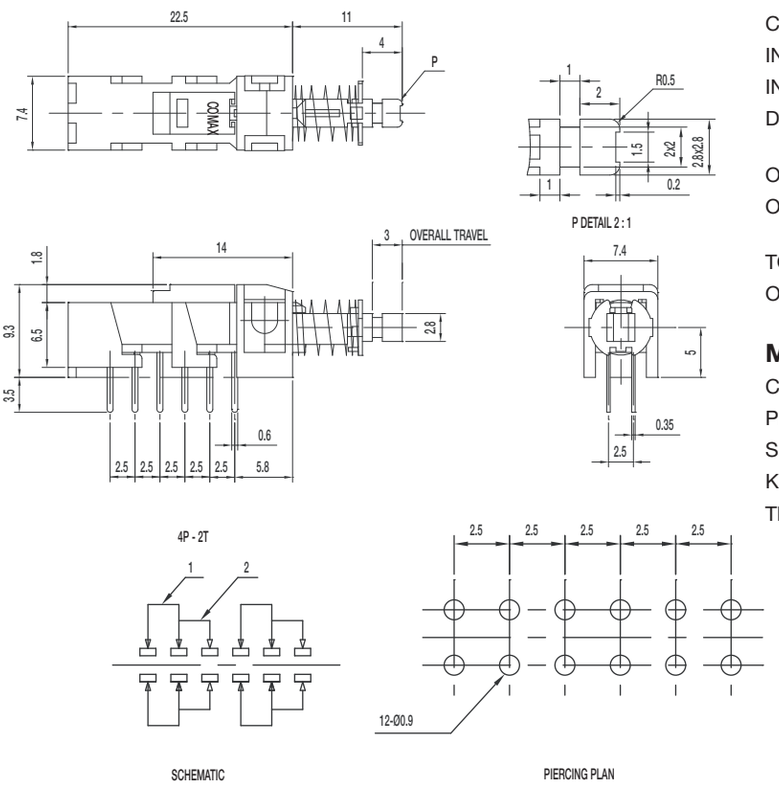

Specifications

CONTACT RATING: 0.3A @ 30 VDC

INITIAL CONTACT RESISTANCE: 30 m ohms max.

INSULATION RESISTANCE: 100 M ohms min.

DIELECTRIC STRENGTH: 500 V AC (50-60 Hz) between open terminals and between the frame and terminal.

OPERATING LIFE: 10,000 cycles without load

OPERATING FORCE:
280 ± 100 gf (2.477 ± 0.98N)

TOTAL TRAVEL: 3 ± 0.3 mm

OPERATING TEMPERATURE: -20˚C to 70˚C

Materials

CASE: PC (UL 94HB)

PLASTIC CLIP: POM (UL 94HB)

SPRING: SUS

KNOB: POM

TERMINAL: Silver plated

PB Series
Single Pole and Multi-Key Pushbutton Switches

PB-62D01-F 6PDT NON-LOCK / MOMENTARY

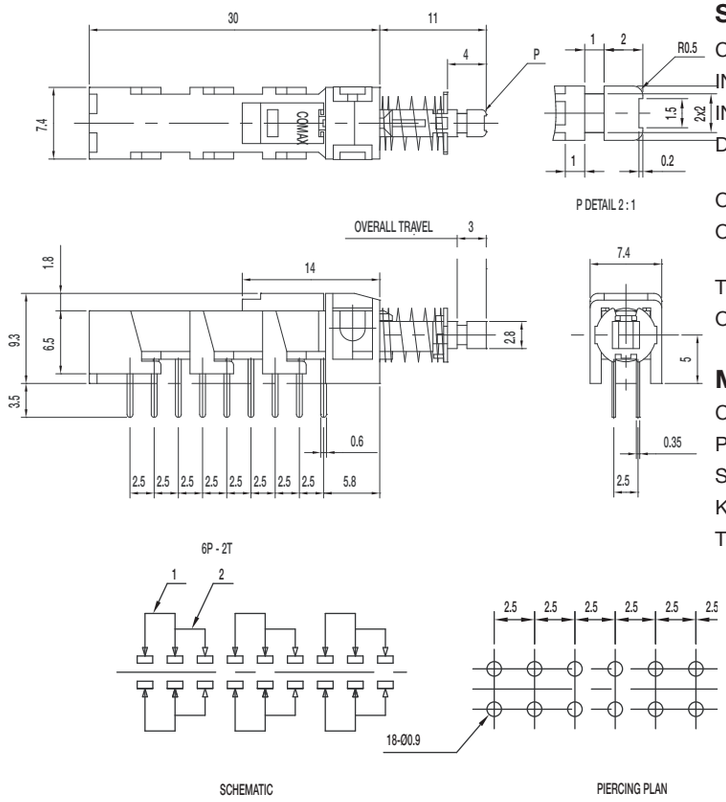

Specifications

CONTACT RATING: 0.3A @ 30 VDC

INITIAL CONTACT RESISTANCE: 30 m ohms max.

INSULATION RESISTANCE: 100 M ohms min.

DIELECTRIC STRENGTH: 500 V AC (50-60 Hz) between open terminals and between the frame and terminal.

OPERATING LIFE: 10,000 cycles without load

OPERATING FORCE:
300 ± 100 gf (2.94 ± 0.98N)

TOTAL TRAVEL: 3 ± 0.3 mm

OPERATING TEMPERATURE: -20˚C to 70˚C

Materials

CASE: PC (UL 94HB)

PLASTIC CLIP: POM (UL 94HB)

SPRING: SUS

KNOB: POM

TERMINAL: Silver plated

PB-22G02-L 2PDT LOCK / LATCHING

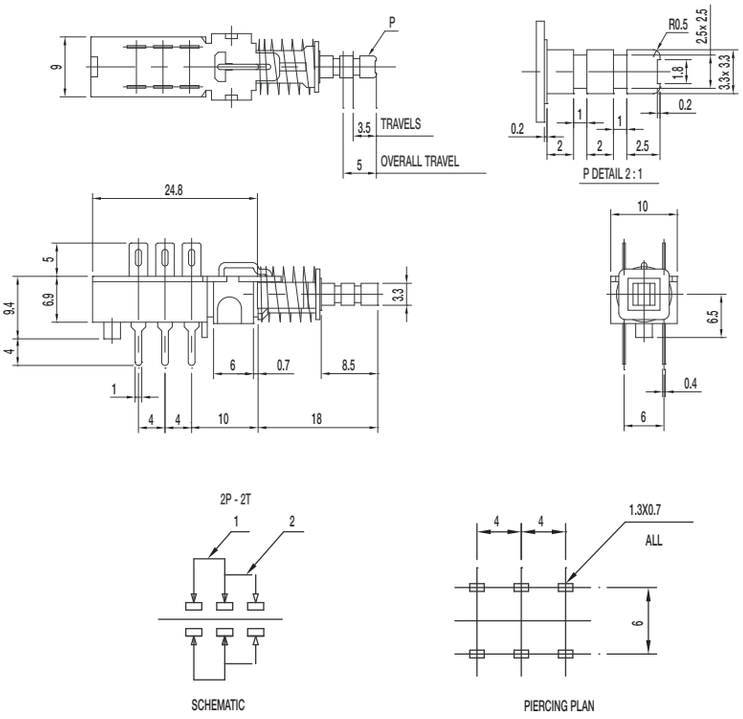

Specifications

CONTACT RATING: 1A @ 25 VDC

INITIAL CONTACT RESISTANCE: 30 m ohms max.

INSULATION RESISTANCE: 100 M ohms min.

DIELECTRIC STRENGTH: 500 V AC (50-60 Hz) between open terminals and between the frame and terminal.

OPERATING LIFE: 10,000 cycles without load

OPERATING FORCE:
350 ± 150 gf (3.43 ± 1.47N)

LOCK TRAVEL: 3.5 ± 0.3mm

TOTAL TRAVEL: 5 ± 0.3 mm

OPERATING TEMPERATURE: -20˚C to 70˚C

Materials

CASE: PC (UL 94HB)

SPRING: SUS

KNOB: POM

TERMINAL: Silver plated

PB-42G02-L 4PDT LOCK / LATCHING

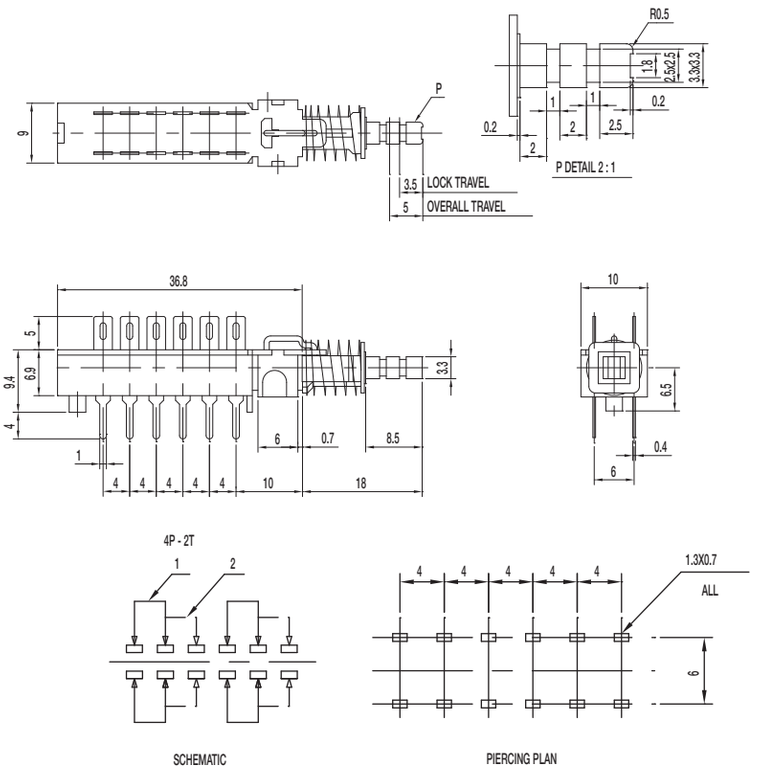

Specifications

CONTACT RATING: 1A @ 25 VDC

INITIAL CONTACT RESISTANCE: 30 m ohms max.

INSULATION RESISTANCE: 100 M ohms min.

DIELECTRIC STRENGTH: 500 V AC (50-60 Hz) between open terminals and between the frame and terminal.

OPERATING LIFE: 10,000 cycles without load

OPERATING FORCE:
400 ± 150 gf (3.92 ± 1.47N)

LOCK TRAVEL: 3.5 ± 0.3mm

TOTAL TRAVEL: 5 ± 0.3 mm

OPERATING TEMPERATURE: -20˚C to 70˚C

Materials

HOUSING: PC (UL 94HB)

SPRING: SUS

KNOB: POM

TERMINAL: Silver plated

PB-62G02-L DPDT LOCK / LATCHING

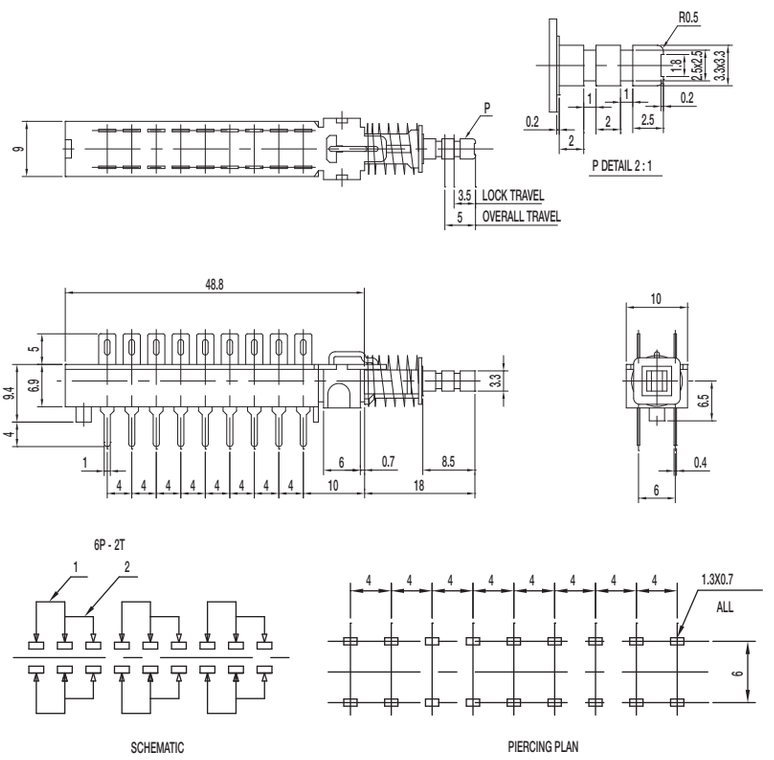

Specifications

CONTACT RATING: 1A @ 25 VDC

INITIAL CONTACT RESISTANCE: 30 m ohms max.

INSULATION RESISTANCE: 100 M ohms min.

DIELECTRIC STRENGTH: 500 V AC (50-60 Hz) between open terminals and between the frame and terminal.

OPERATING LIFE: 10,000 cycles without load

OPERATING FORCE:
450 ± 150 gf

LOCK TRAVEL: 3.5 ± 0.3mm

TOTAL TRAVEL: 5 ± 0.3 mm

OPERATING TEMPERATURE: -20˚C to 70˚C

Materials

HOUSING: PC (UL 94HB)

SPRING: SUS

KNOB: POM

TERMINAL: Silver plated

PB Series
Single Pole and Multi-Key Pushbutton Switches

PB-22G02-F DPDT NON-LOCK / MOMENTARY

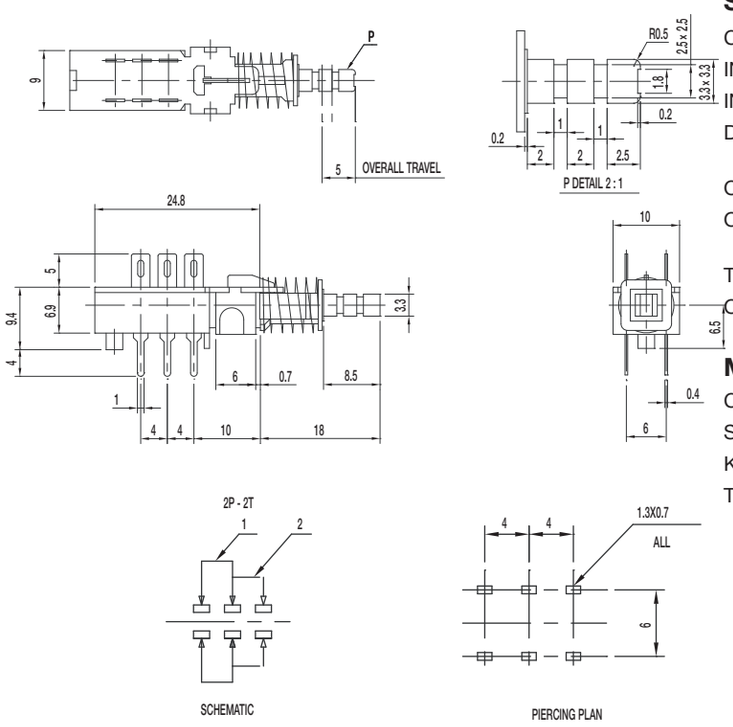

Specifications

CONTACT RATING: 1A @ 25 VDC

INITIAL CONTACT RESISTANCE: 30 m ohms max.

INSULATION RESISTANCE: 100 M ohms min.

DIELECTRIC STRENGTH: 500 V AC (50-60 Hz) between open terminals and between the frame and terminal.

OPERATING LIFE: 10,000 cycles without load

OPERATING FORCE:
350 ± 150 gf (3.43 ± 1.47N)

TOTAL TRAVEL: 5 ± 0.3 mm

OPERATING TEMPERATURE: -20˚C to 70˚C

Materials

CASE: PC (UL 94HB)

SPRING: SUS

KNOB: POM

TERMINAL: Silver plated

PB-42G02-F 4PDT NON-LOCK / MOMENTARY

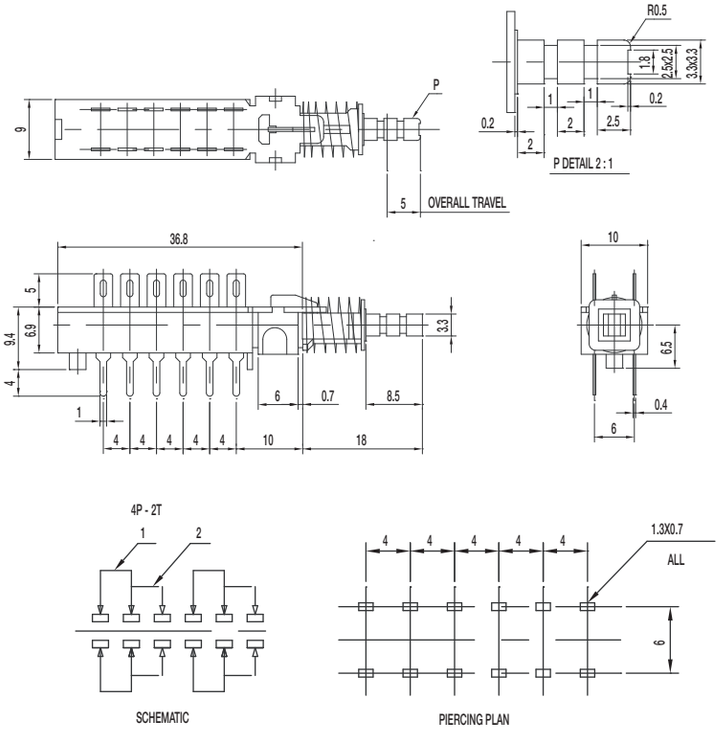

Specifications

CONTACT RATING: 1A @ 25 VDC

INITIAL CONTACT RESISTANCE: 30 m ohms max.

INSULATION RESISTANCE: 100 M ohms min.

DIELECTRIC STRENGTH: 500 V AC (50-60 Hz) between open terminals and between the frame and terminal.

OPERATING LIFE: 10,000 cycles without load

OPERATING FORCE:
400 ± 150 gf (3.92 ± 1.47N)

TOTAL TRAVEL: 5 ± 0.3 mm

OPERATING TEMPERATURE: -20˚C to 70˚C

Materials

HOUSING: PC (UL 94HB)

SPRING: SUS

KNOB: POM

TERMINAL: Silver plated

PB-62G02-F 6PDT NON-LOCK / MOMENTARY

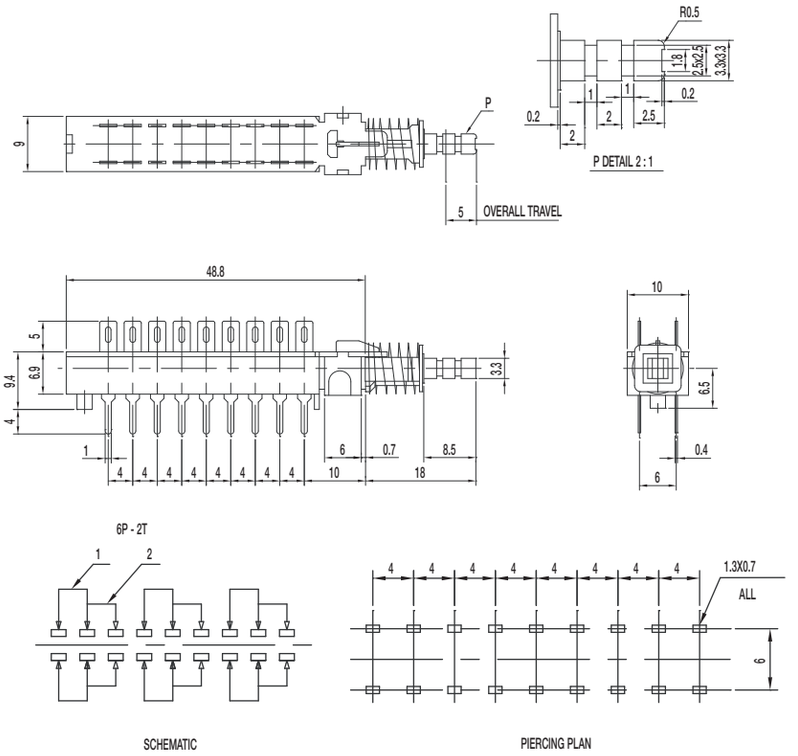

Specifications

CONTACT RATING: 1A @ 25 VDC

INITIAL CONTACT RESISTANCE: 30 m ohms max.

INSULATION RESISTANCE: 100 M ohms min.

DIELECTRIC STRENGTH: 500 V AC (50-60 Hz) between open terminals and between the frame and terminal.

OPERATING LIFE: 10,000 cycles without load

OPERATING FORCE:
450 ± 150 gf (4.41 ± 1.47N)

TOTAL TRAVEL: 5 ± 0.3 mm

OPERATING TEMPERATURE: -20˚C to 70˚C

Materials

HOUSING: PC (UL 94HB)

SPRING: SUS

KNOB: POM

TERMINAL: Silver plated

PB Multi-Key Series

P B — K — — — — — — — —

Key
- **1K** 1K
- **2K** 2K
- **3K** 3K
- **4K** 4K
- **5K** 5K

Travel
- **G** 3.5 mm
- **D** 2 mm

Key Pitch
- **0** 0
- **1** 10
- **2** 12.5
- **3** 15
- **4** 17.5
- **5** 20
- **6** 25
- **7** 30

Mounting Hole
- **A** M3 x 0.5
- **B** 3.2
- **C** No mounting hole

Poles
- **2** 2 poles
- **4** 4 poles
- **6** 6 poles

Operating Type
- **E** Release
- **F** Non-lock
- **L** Self-lock
- **T** Interlock
- **XF** All non-lock
- **XT** All self-lock
- **XL** All interlock

Terminal Shape
- **P**
- **X**
- **N**

Contact Function
- **S** Shorting
- **NS** Non-shorting

Dimensions are shown: mm
Specifications and dimensions subject to change

PB Series
Single Pole and Multi-Key Pushbutton Switches

PB Multi-Key Series

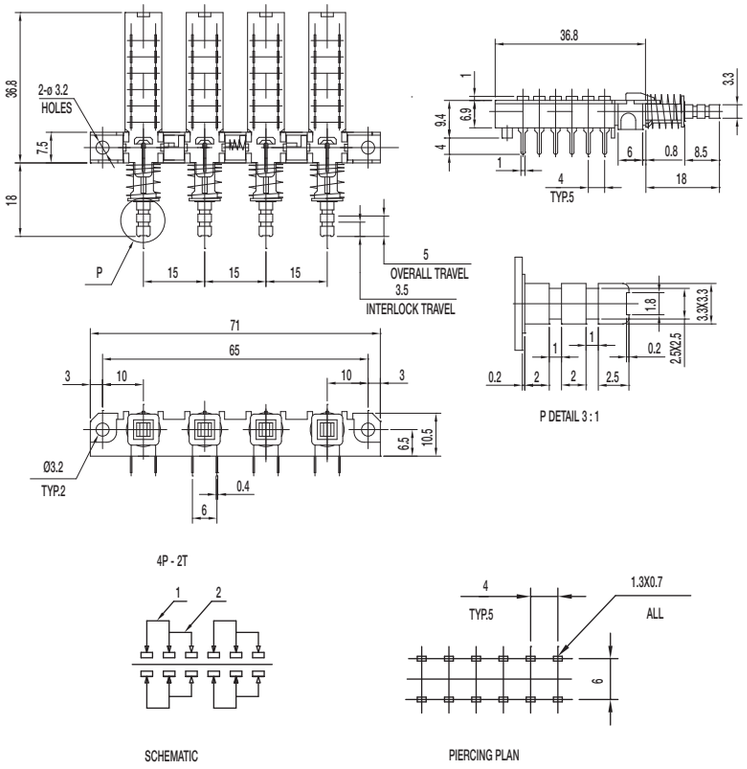

Specifications

CONTACT RATING: 0.3A @ 30 VDC

INITIAL CONTACT RESISTANCE: 30 m ohms max.

INSULATION RESISTANCE: 100 M ohms min.

DIELECTRIC STRENGTH: 500 V AC (50-60 Hz) between open terminals and between the frame and terminal.

OPERATING LIFE: 10,000 cycles without load

OPERATING FORCE:
250 ± 100 gf (2.45 ± 0.98N)

TOTAL TRAVEL: 3 ± 0.3 mm

OPERATING TEMPERATURE: -20˚C to 70˚C

Materials

CASE: PC (UL 94HB)

PLASTIC CLIP: POM (UL 94HB)

SPRING: SUS

KNOB: POM

TERMINAL: Silver plated

PS-12G Series
Pushbutton Switches

Features/Benefits

- ***Latching pushbutton***
- ***Non-shorting with lock***
- ***5 mm travel***
- ***SPDT***

Typical Applications

- ***Automotive interior lighting***
- ***Computer peripherals***
- ***Appliances***

PART NUMBER	PACKAGING	SCHEMATIC
PS-12G01	200 pieces	

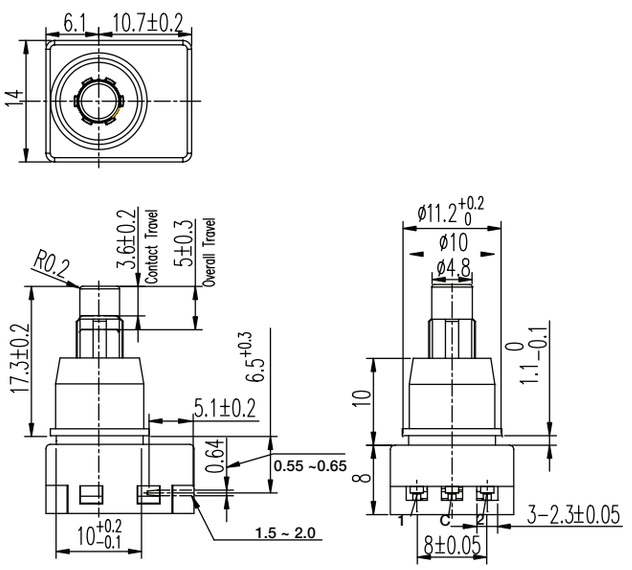

Dimensions

FOOTPRINT: 14 X 16.8 mm

HEIGHT: 18 mm

Specifications

CONTACT RATING: 1A @ 14 VDC

INITIAL CONTACT RESISTANCE: 100 m ohms max.

INSULATION RESISTANCE: 100 M ohms min.

DIELECTRIC STRENGTH: 500 V AC (50-60 Hz) between open terminals and between the frame and terminal.

OPERATING LIFE: 20,000 cycles with load

OPERATING FORCE: 400 ± 100 gf

OPERATING POSITION: 3.6 ± 0.2 mm

TOTAL TRAVEL: 5 ± 0.3 mm

OPERATING TEMPERATURE: -20˚C to 70˚C

Materials

KNOB: POM (UL 94HB)

HOUSING: PBT (UL 94V-0)

COVER: PBT (UL 94V-0)

ROTOR: PBT (UL 94V-0)

SLIDER: POM (UL 94HB)

TERMINAL: Phospher bronze, silver plated

SPRING: Stainless steel

CONTACT: Phospher bronze, silver plated

PS-12G Series
Pushbutton Switches

PART NUMBER	PACKAGING	SCHEMATIC
PS-12G03	200 pieces	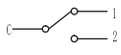

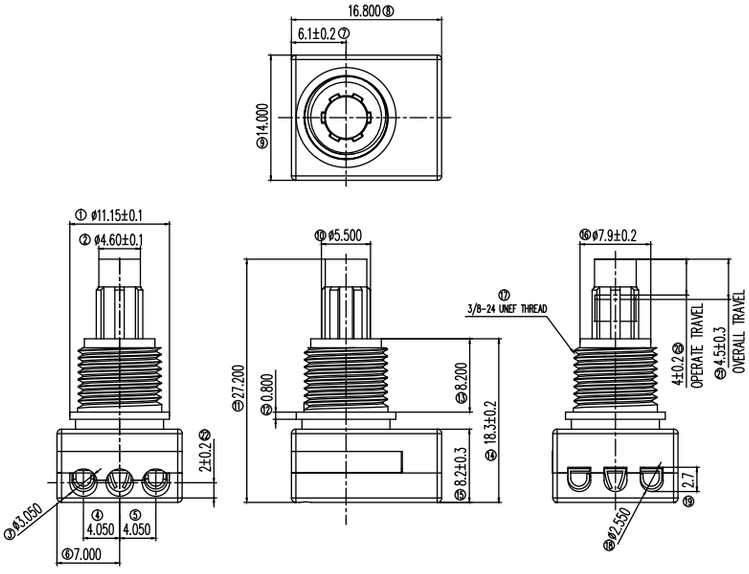

TYCO .062 Commercial Pin
and Socket Connector
PT# 770983-1

Dimensions

FOOTPRINT: 14 X 16.8 mm

HEIGHT: 18.3 mm

Specifications

CONTACT RATING: 2.2A @ 14.5 VDC

INITIAL CONTACT RESISTANCE: 50 m ohms max.

INSULATION RESISTANCE: 100 M ohms min.

DIELECTRIC STRENGTH: 500 V AC (50-60 Hz) between open terminals and between the frame and terminal.

OPERATING LIFE: 20,000 cycles with load

OPERATING FORCE: 650 ± 300 gf

OPERATING POSITION: 4.00 ± 0.2 mm

TOTAL TRAVEL: 4.5 ± 0.3 mm

OPERATING TEMPERATURE: -40˚C to 85˚C

Materials

KNOB: POM (UL 94HB)

HOUSING: PBT & PA (UL 94V-0)

COVER: PBT (UL 94V-0)

ROTOR: PBT (UL 94V-0)

SLIDER: POM (UL 94HB)

TERMINAL: Brass, silver plated

SPRING: Stainless steel

CONTACT: Phospher bronze, silver plated

PS-22 Series
Subminiature Pushbutton Switches

Features/Benefits

- ***Compact miniature push switch***
- ***Momentary or latching options***
- ***Shorting or non-shorting***
- ***DPDT***

Typical Applications

- ***Industrial***
- ***Automotive***
- ***Audio and visual equipment***

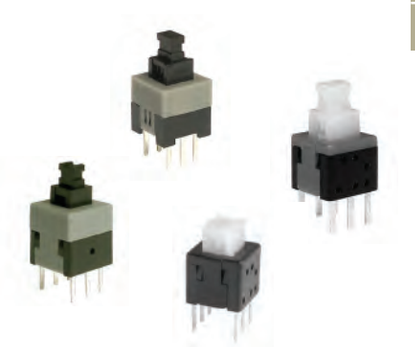

PART NUMBER	PACKAGING	SCHEMATIC
PS-2203-L NS PA	1,000 pieces	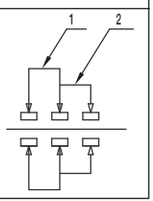
PS-2203-F NS PA	1,000 pieces	

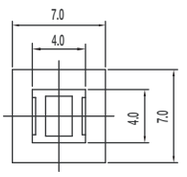

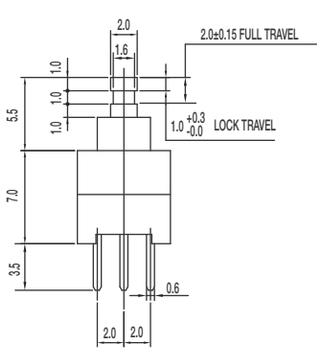

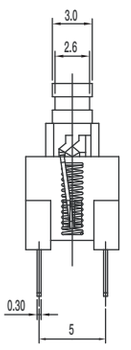

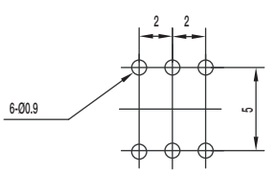

PIERCING PLAN

Dimensions

FOOTPRINT: 7.0 x 7.0 mm

HEIGHT: 12.5 mm

Specifications

CONTACT RATING: 0.1A @ 30 VDC

INITIAL CONTACT RESISTANCE: 30 m ohms max.

INSULATION RESISTANCE: 100 M ohms min.

DIELECTRIC STRENGTH: 500 V AC (50-60 Hz) between open terminals and between the frame and terminal.

OPERATING LIFE: 10,000 cycles with load

OPERATING FORCE:
200 ± 100 gf (1.96 ± 0.98N)

LOCK TRAVEL: 1 mm

TOTAL TRAVEL: 2 mm

OPERATING TEMPERATURE: -20˚C to 70˚C

Materials

KNOB: POM Black

HOUSING: PA Black

COVER: POM Grey (latch) / White (Mom)

TERMINAL: Brass, silver plated

CONTACT CLIP: Phosphor bronze., silver plated

SPRING: Stainless steel

HOOK LOCK: Stainless steel (latch)

PS-22 Series
Subminiature Pushbutton Switches

PART NUMBER	PACKAGING	SCHEMATIC
PS-2206-L NS PA	1,000 pieces	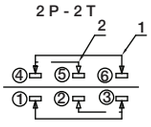
PS-2206-F NS PA	1,000 pieces	

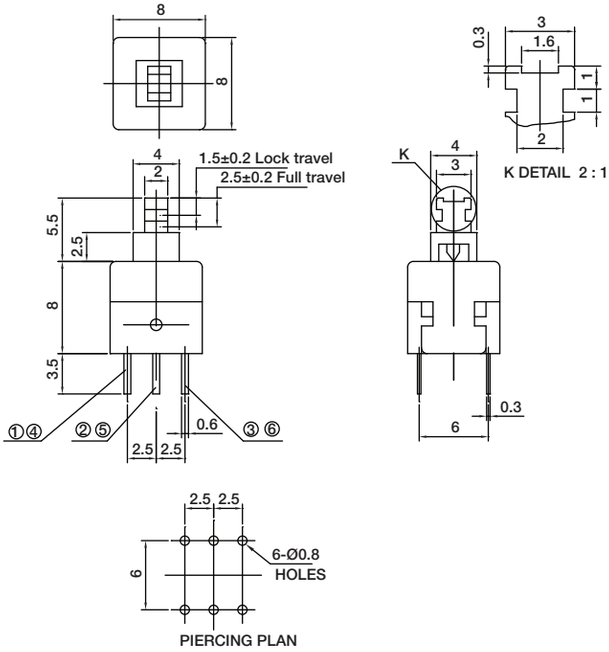

Dimensions

FOOTPRINT: 8.0 x 8.0 mm

HEIGHT: 13.5 mm

Specifications

CONTACT RATING: 0.1A @ 30 VDC

INITIAL CONTACT RESISTANCE: 70 m ohms max.

INSULATION RESISTANCE: 100 M ohms min.

DIELECTRIC STRENGTH: 500 V AC (50-60 Hz) between open terminals and between the frame and terminal.

OPERATING LIFE: 10,000 cycles with load

OPERATING FORCE:
200 ± 100 gf (1.96 ± 0.98N)

LOCK TRAVEL: 1.5 mm

TOTAL TRAVEL: 2.5 mm

OPERATING TEMPERATURE: -20˚C to 70˚C

Materials

KNOB: POM Black

HOUSING: PA Black

COVER: POM Grey (latch) / White (Mom)

TERMINAL: Brass, silver plated

CONTACT CLIP: Phosphor bronze., silver plated

SPRING: Stainless steel

HOOK LOCK: Stainless steel (latch)

PART NUMBER	PACKAGING	SCHEMATIC
PS-2214-L NS PA	1,000 pieces	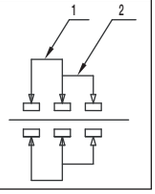
PS-2214-F NS PA	1,000 pieces	

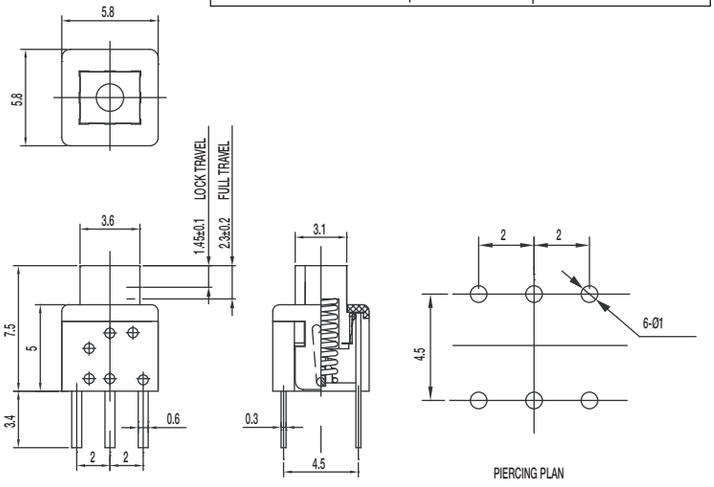

Dimensions

FOOTPRINT: 5.8 x 5.8 mm

HEIGHT: 7.5 mm

Specifications

CONTACT RATING: 0.1A @ 30 VDC

INITIAL CONTACT RESISTANCE: 80 m ohms max.

INSULATION RESISTANCE: 100 M ohms min.

DIELECTRIC STRENGTH: 500 V AC (50-60 Hz) between open terminals and between the frame and terminal.

OPERATING LIFE: 10,000 cycles with load

OPERATING FORCE:
150 ± 50 gf (1.47 ± 0.49N)

LOCK TRAVEL: 1.45 mm

TOTAL TRAVEL: 2.3 mm

OPERATING TEMPERATURE: -20˚C to 70˚C

Materials

KNOB: POM Natural (latch) / PA black

HOUSING: PA Black

COVER: PA Black

TERMINAL: Brass, silver plated

CONTACT CLIP: Phosphor bronze, silver clad

SPRING: Stainless steel

HOOK LOCK: Stainless steel (latch)

Dimensions are shown: mm
Specifications and dimensions subject to change

PS-22 Series
Subminiature Pushbutton Switches

PART NUMBER	PACKAGING	SCHEMATIC
PS-221605-L NS	1,000 pieces	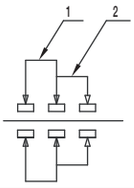
PS-221605-F NS	1,000 pieces	

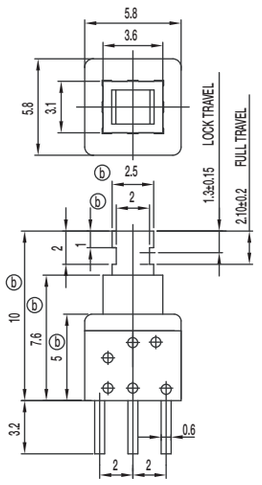

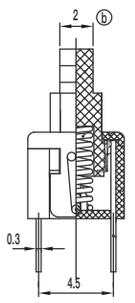

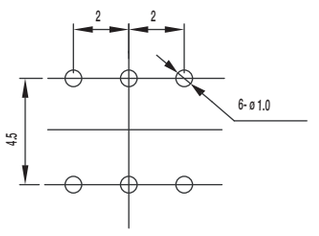

PIERCING PLAN

Dimensions

FOOTPRINT: 5.8 x 5.8 mm

HEIGHT: 10 mm

Specifications

CONTACT RATING: 0.1A @ 30 VDC / 2A @ 2 VDC

INITIAL CONTACT RESISTANCE: 80 m ohms max.

INSULATION RESISTANCE: 100 M ohms min.

DIELECTRIC STRENGTH: 500 V AC (50-60 Hz) between open terminals and between the frame and terminal.

OPERATING LIFE: 10,000 cycles with load

OPERATING FORCE:
150 ± 50 gf (1.47 ± 0.49N)

LOCK TRAVEL: 1.3 mm

TOTAL TRAVEL: 2.1 mm

OPERATING TEMPERATURE: -20˚C to 70˚C

Materials

KNOB: POM Natural

HOUSING: PA Black

COVER: PC Grey

TERMINAL: Bras, silver plated

CONTACT CLIP: Phosphor bronze, silver clad

SPRING: Stainless steel

HOOK LOCK: Stainless steel (latch)

PS Series
Miniature Pushbutton Switches

Features/Benefits

- ***Miniature size***
- ***Momentary or latching options***
- ***Broad range of products***

Typical Applications

- ***Industrial***
- ***Automotive***
- ***Audio and visual equipment***
- ***Telecommunications***

PS-22I05 DPDT NON-SHORTING

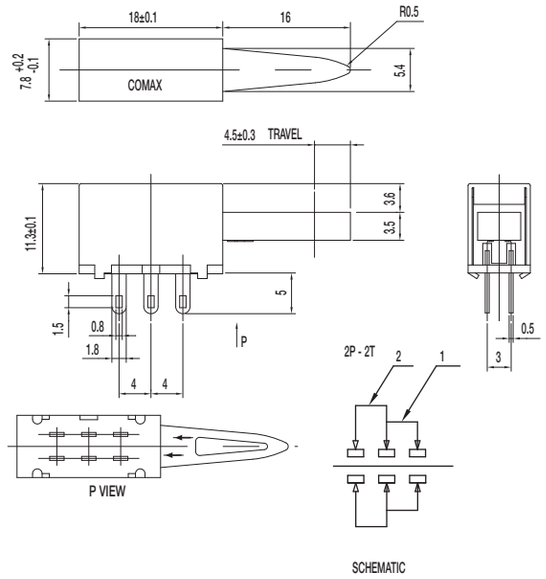

Specifications

CONTACT RATING: 0.3A @ 30 VDC

INITIAL CONTACT RESISTANCE: 30 m ohms max.

INSULATION RESISTANCE: 100 M ohms min.

DIELECTRIC STRENGTH: 500 V AC (50-60 Hz) between open terminals and between the frame and terminal.

OPERATING LIFE: 10,000 cycles with load

OPERATING FORCE: 400 ± 150 gf (3.92 ± 1.47N)

TOTAL TRAVEL: 4.5 ± 0.3 mm

OPERATING TEMPERATURE: -20˚C to 70˚C

Materials

FRAME: SECC

KNOB: POM (UL 94HB)

CONTACT PLATE: Silver clad

SPRING: SUS

TERMINAL: Silver plated

PS-12C02-F NS SPST NON-SHORTING

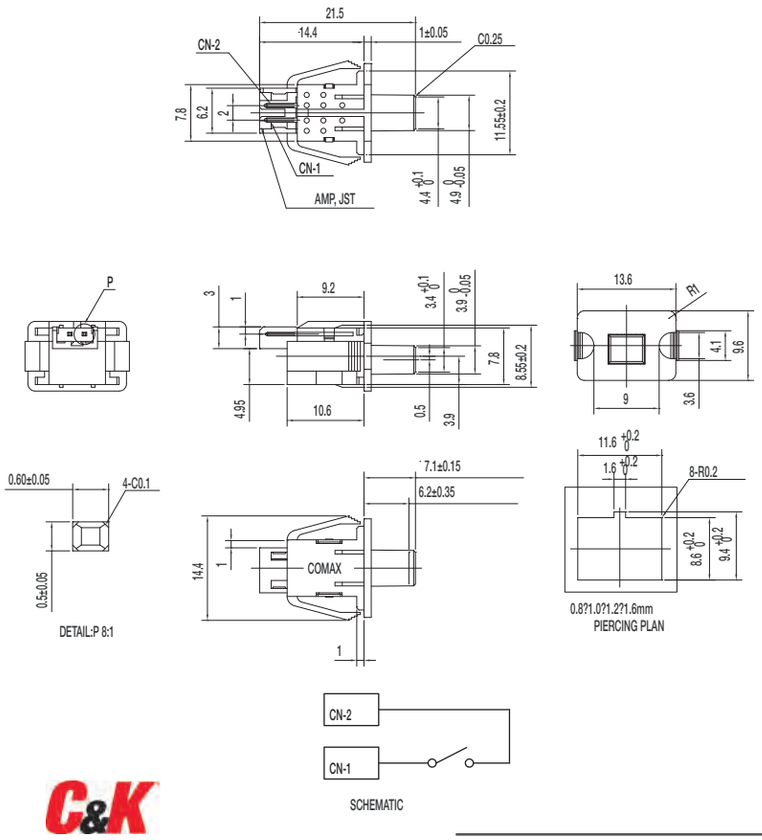

Specifications

CONTACT RATING: 100 µ A @ 3 VDC min. / 10mA @ 5 VDC max

INITIAL CONTACT RESISTANCE: 100 m ohms max.

INSULATION RESISTANCE: 100 M ohms min.

DIELECTRIC STRENGTH: 250 V AC (50-60 Hz) between open terminals and between the frame and terminal.

OPERATING LIFE: 100,000 cycles with load

OPERATING FORCE: 50 ± 15 gf (0.49 ± 0.147N)

PRE-TRAVEL: 6.20 ± 0.35 mm

OPERATING TEMPERATURE: -40˚C to 85˚C

Materials

KNOB: POM (UL 94HB)

COVER: PA (UL 94V-0)

HOUSING: PA (UL 94V-0)

SPRING: SUS

TERMINAL: Silver plated

Dimensions are shown: mm
Specifications and dimensions subject to change

PS-32C02-F NS 1P3T NON-SHORTING

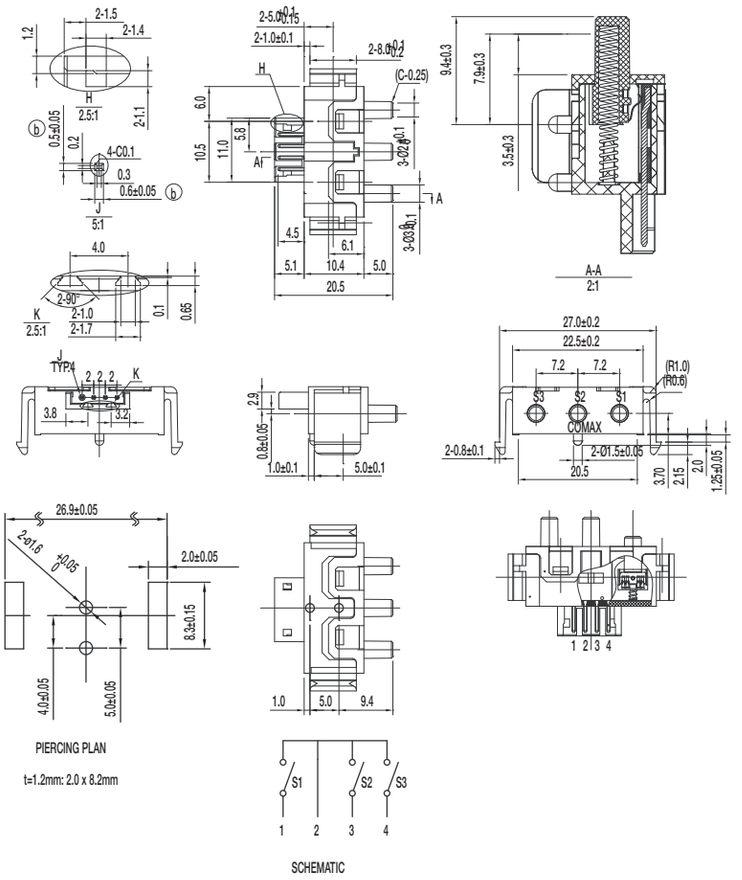

Specifications

CONTACT RATING: 100 µ A @ 3 VDC min. / 10mA @ 5 VDC max

INITIAL CONTACT RESISTANCE: 100 m ohms max.

INSULATION RESISTANCE: 100 M ohms min.

DIELECTRIC STRENGTH: 250 V AC (50-60 Hz) between open terminals and between the frame and terminal.

OPERATING LIFE: 100,000 cycles with load

OPERATING FORCE: 80 ± 20 gf (0.784 ± 0.196N)

PRE-TRAVEL: 1.5 ± 0.3 mm

OVER-TRAVEL: 3.5 ± 0.3 mm

TOTAL TRAVEL: 5 ± 0.3 mm

OPERATING TEMPERATURE: -20˚C to 65˚C

Materials

KNOB: POM (UL 94HB)

COVER: PA (UL 94V-0)

HOUSING: PA (UL 94V-0)

SPRING: SUS

TERMINAL: Silver plated

PS-42C02-F NS 1P4T NON-SHORTING

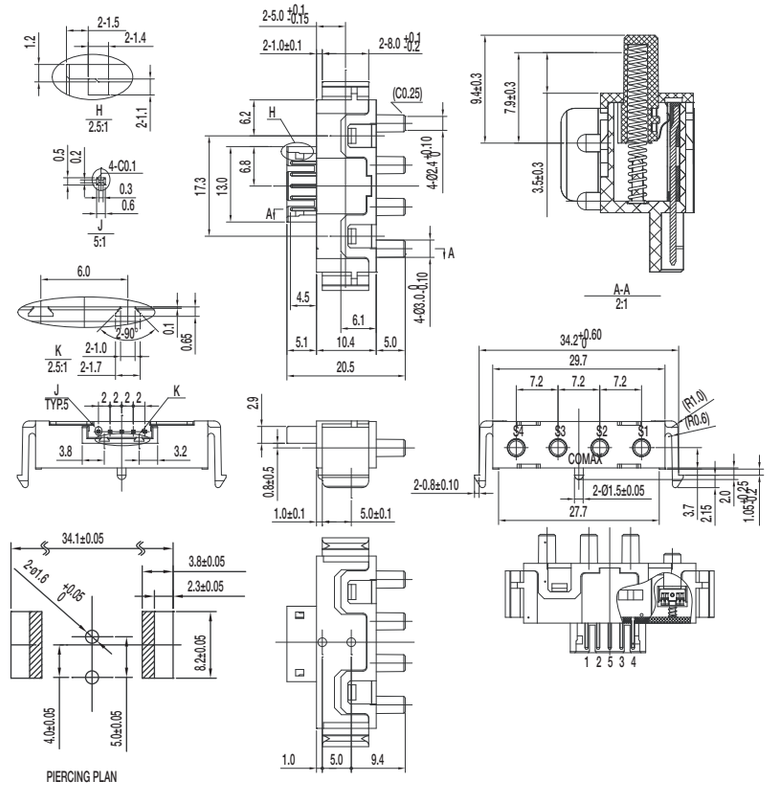

Specifications

CONTACT RATING: 100 µ A @ 3 VDC min. / 10mA @ 5 VDC max

INITIAL CONTACT RESISTANCE: 100 m ohms max.

INSULATION RESISTANCE: 100 M ohms min.

DIELECTRIC STRENGTH: 250 V AC (50-60 Hz) between open terminals and between the frame and terminal.

OPERATING LIFE: 100,000 cycles with load

OPERATING FORCE: 80 ± 20 gf (0.784 ± 0.196N)

PRE-TRAVEL: 1.5 ± 0.3 mm

OVER-TRAVEL: 3.5 ± 0.3 mm

TOTAL TRAVEL: 5 ± 0.3 mm

OPERATING TEMPERATURE: -20˚C to 65˚C

Materials

KNOB: POM (UL 94HB)

COVER: PA (UL 94V-0)

HOUSING: PA (UL 94V-0)

SPRING: SUS

TERMINAL: Silver plated

Dimensions are shown: mm
Specifications and dimensions subject to change

PS Series
Miniature Pushbutton Switches

PS-22C08-G10 NS DPDT NON-SHORTING

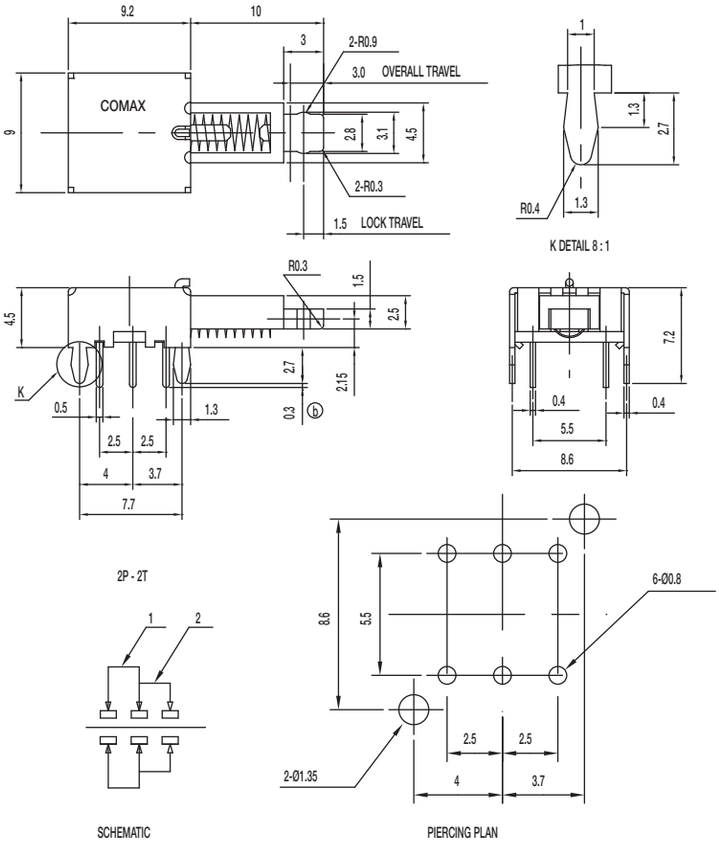

Specifications

CONTACT RATING: 0.3A @ 30 VDC
INITIAL CONTACT RESISTANCE: 30 m ohms max.
INSULATION RESISTANCE: 100 M ohms min.
DIELECTRIC STRENGTH: 500 V AC (50-60 Hz) between open terminals and between the frame and terminal.
OPERATING LIFE: 10,000 cycles without load
OPERATING FORCE: 200 ± 100 gf (1.96 ± 0.98N)
LOCK TRAVEL: 1.5 ± 0.3 mm
OVER-TRAVEL: 3 ± 0.3 mm
OPERATING TEMPERATURE: -20˚C to 70˚C

Materials

FRAME: SPCC
KNOB: POM (UL 94HB)
CONTACT: Silver plated
SPRING: SUS
TERMINAL: Silver plated

PS-22E08-G10 NS DPDT NON-SHORTING

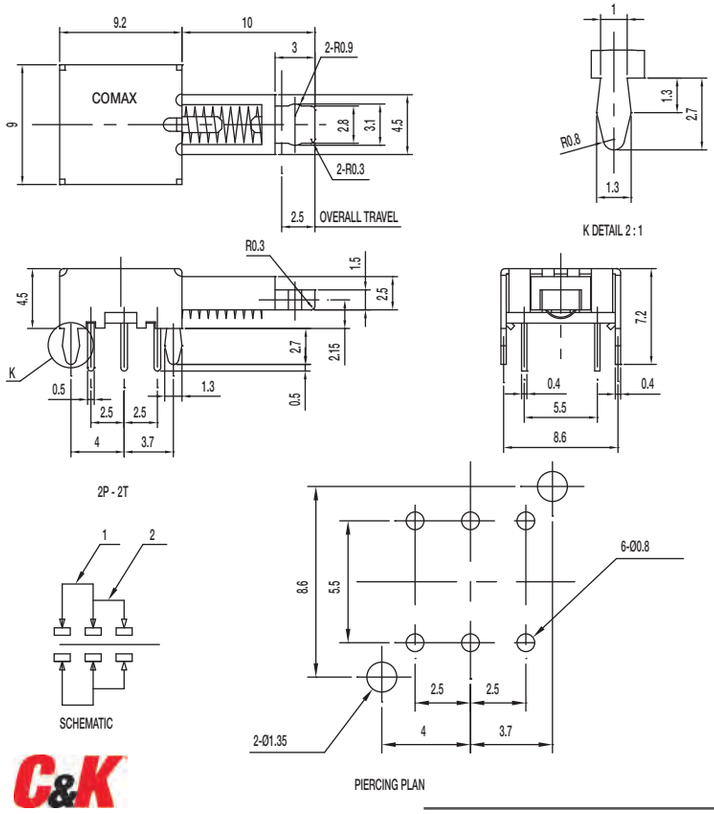

Specifications

CONTACT RATING: 0.3A @ 30 VDC
INITIAL CONTACT RESISTANCE: 30 m ohms max.
INSULATION RESISTANCE: 100 M ohms min.
DIELECTRIC STRENGTH: 500 V AC (50-60 Hz) between open terminals and between the frame and terminal.
OPERATING LIFE: 10,000 cycles without load
OPERATING FORCE: 200 ± 100 gf (1.96 ± 0.98N)
TOTAL TRAVEL: 2.5 ± 0.3 mm
OPERATING TEMPERATURE: -20˚C to 70˚C

Materials

FRAME: SPCC
KNOB: POM (UL 94HB)
CONTACT: Silver plated
SPRING: SUS
TERMINAL: Silver plated

Dimensions are shown: mm
Specifications and dimensions subject to change

PS-22E09-G 4.5 NS DPDT NON-SHORTING

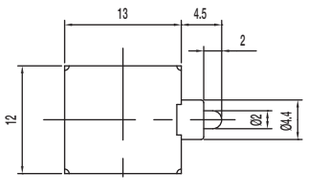

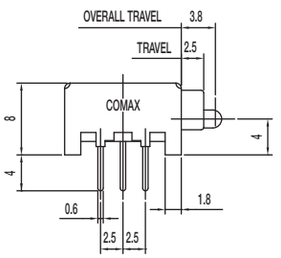

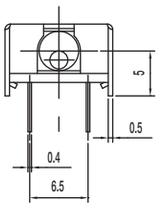

2P - 2T

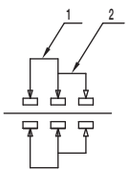

SCHEMATIC

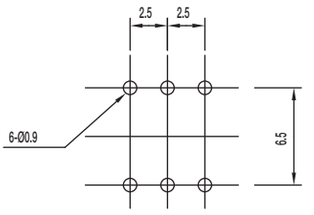

PIERCING PLAN

Specifications

CONTACT RATING: 0.3A @ 30 VDC
INITIAL CONTACT RESISTANCE: 30 m ohms max.
INSULATION RESISTANCE: 100 M ohms min.
DIELECTRIC STRENGTH: 500 V AC (50-60 Hz) between open terminals and between the frame and terminal.
OPERATING LIFE: 10,000 cycles with load
OPERATING FORCE: 70 ± 20 gf (0.686 ± 0.196N)
TRAVEL: 2.5 ± 0.3 mm
TOTAL TRAVEL: 3.8 ± 0.3 mm
OPERATING TEMPERATURE: -20˚C to 70˚C

Materials

FRAME: SPCC
KNOB: POM (UL 94HB)
CONTACT: Silver plated
SPRING: SUS
TERMINAL: Silver plated

PS-42D09-NS 4P2T NON-SHORTING

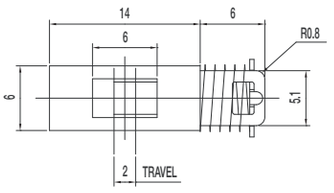

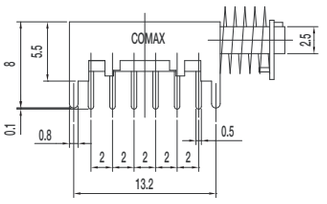

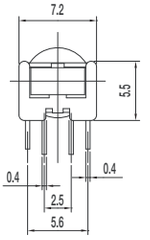

4P - 2T

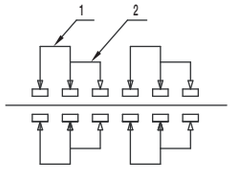

SCHEMATIC

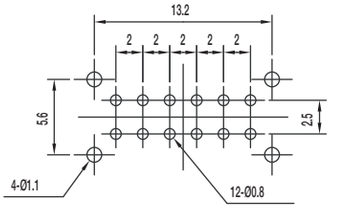

PIERCING PLAN

Specifications

CONTACT RATING: 0.3A @ 30 VDC
INITIAL CONTACT RESISTANCE: 30 m ohms max.
INSULATION RESISTANCE: 100 M ohms min.
DIELECTRIC STRENGTH: 500 V AC (50-60 Hz) between open terminals and between the frame and terminal.
OPERATING LIFE: 10,000 cycles with load
OPERATING FORCE: 250 ± 100 gf (2.45 ± 0.98N)
TRAVEL: 2 ± 0.3 mm
OPERATING TEMPERATURE: -20˚C to 70˚C

Materials

FRAME: SPCC
KNOB: POM (UL 94HB)
CONTACT PLATE: Silver plated
SPRING: Steel
TERMINAL: Silver plated

PS Series
Miniature Pushbutton Switches

PS-42D13-NS 4P2T NON-SHORTING

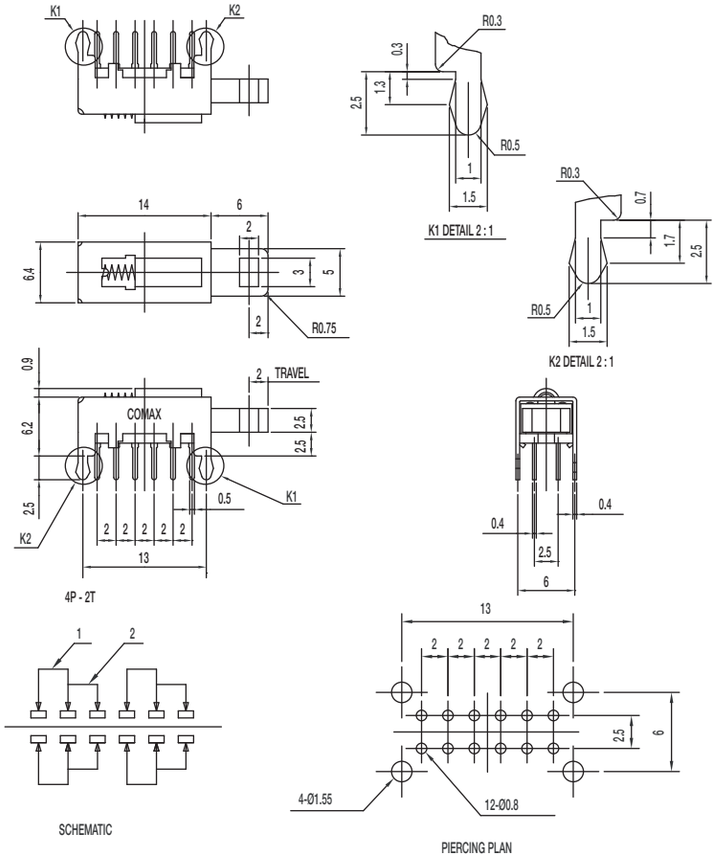

Specifications

CONTACT RATING: 0.3A @ 30 VDC

INITIAL CONTACT RESISTANCE: 30 m ohms max.

INSULATION RESISTANCE: 100 M ohms min.

DIELECTRIC STRENGTH: 500 V AC (50-60 Hz) between open terminals and between the frame and terminal.

OPERATING LIFE: 10,000 cycles with load

OPERATING FORCE: 250 ± 100 gf (2.45 ± 0.98N)

TRAVEL: 2 ± 0.3 mm

OPERATING TEMPERATURE: -20˚C to 70˚C

Materials

FRAME: SPCC

KNOB: POM (UL 94HB)

CONTACT: Silver plated

SPRING: Steel

TERMINAL: Silver plated

PS-42D16-S 4P2T SHORTING

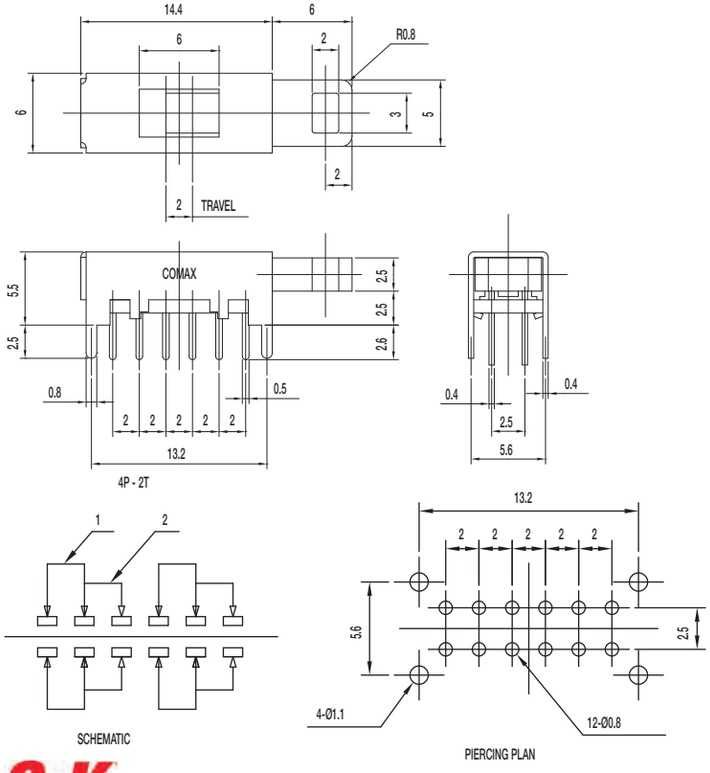

Specifications

CONTACT RATING: 0.3A @ 30 VDC

INITIAL CONTACT RESISTANCE: 30 m ohms max.

INSULATION RESISTANCE: 100 M ohms min.

DIELECTRIC STRENGTH: 500 V AC (50-60 Hz) between open terminals and between the frame and terminal.

OPERATING LIFE: 10,000 cycles with load

OPERATING FORCE: 60 ± 30 gf (0.59 ± 0.29N)

TRAVEL: 2 ± 0.3 mm

OPERATING TEMPERATURE: -20˚C to 70˚C

Materials

FRAME: SPCC

KNOB: POM (UL 94HB)

CONTACT: Silver plated

TERMINAL: Silver plated

Dimensions are shown: mm
Specifications and dimensions subject to change

PS-62D10-S 6P2T SHORTING

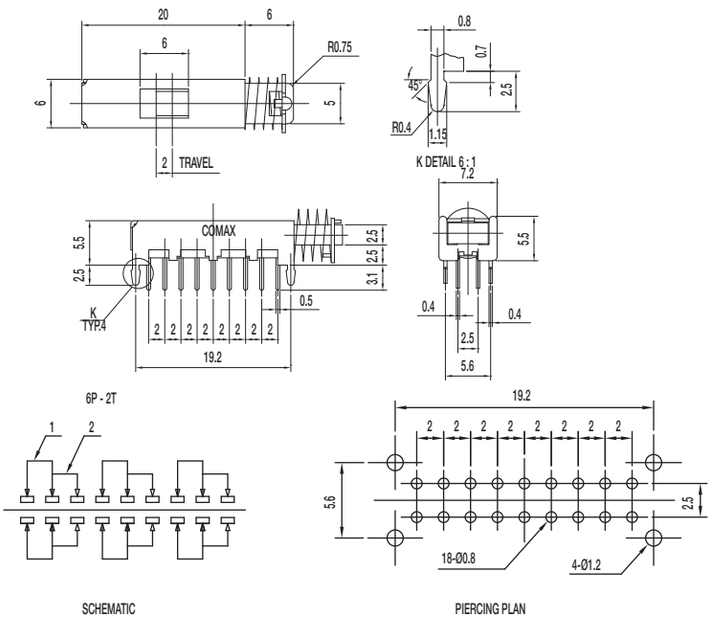

Specifications

CONTACT RATING: 0.3A @ 30 VDC

INITIAL CONTACT RESISTANCE: 30 m ohms max.

INSULATION RESISTANCE: 100 M ohms min.

DIELECTRIC STRENGTH: 500 V AC (50-60 Hz) between open terminals and between the frame and terminal.

OPERATING LIFE: 10,000 cycles with load

OPERATING FORCE: 250 ± 100 gf (2.45 ± 0.98N)

TRAVEL: 2 ± 0.3 mm

OPERATING TEMPERATURE: -20˚C to 70˚C

Materials

FRAME: SPCC

KNOB: POM (UL 94HB)

CONTACT: Silver plated

SPRING: Steel

TERMINAL: Silver plated

PS-62D13-S 6P2T SHORTING

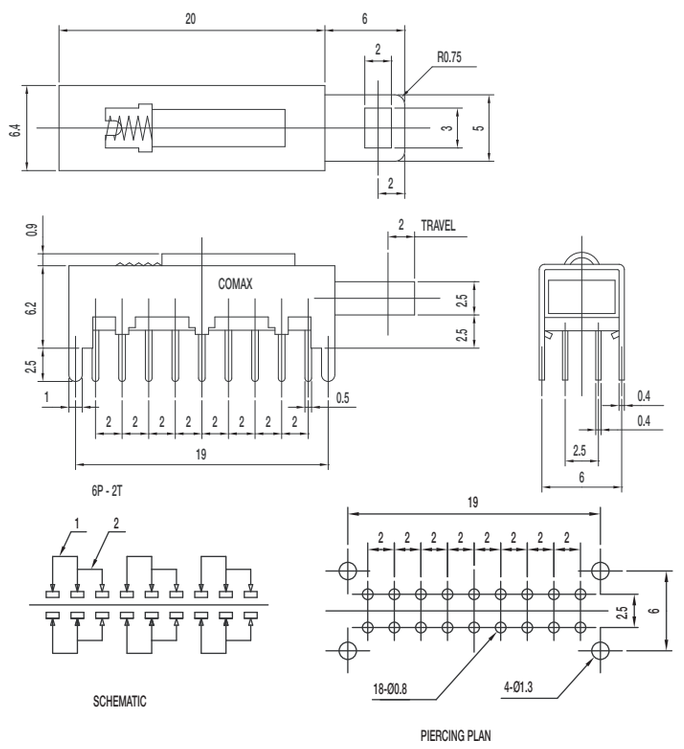

Specifications

CONTACT RATING: 0.3A @ 30 VDC

INITIAL CONTACT RESISTANCE: 30 m ohms max.

INSULATION RESISTANCE: 100 M ohms min.

DIELECTRIC STRENGTH: 500 V AC (50-60 Hz) between open terminals and between the frame and terminal.

OPERATING LIFE: 10,000 cycles with load

OPERATING FORCE: 300 ± 100 gf (2.94 ± 0.98N)

TRAVEL: 2 ± 0.3 mm

OPERATING TEMPERATURE: -20˚C to 70˚C

Materials

FRAME: SPCC

KNOB: POM (UL 94HB)

CONTACT PLATE: Silver plated

SPRING: Steel

TERMINAL: SUS

PS Series
Miniature Pushbutton Switches

PS-62D15-S 6P2T SHORTING

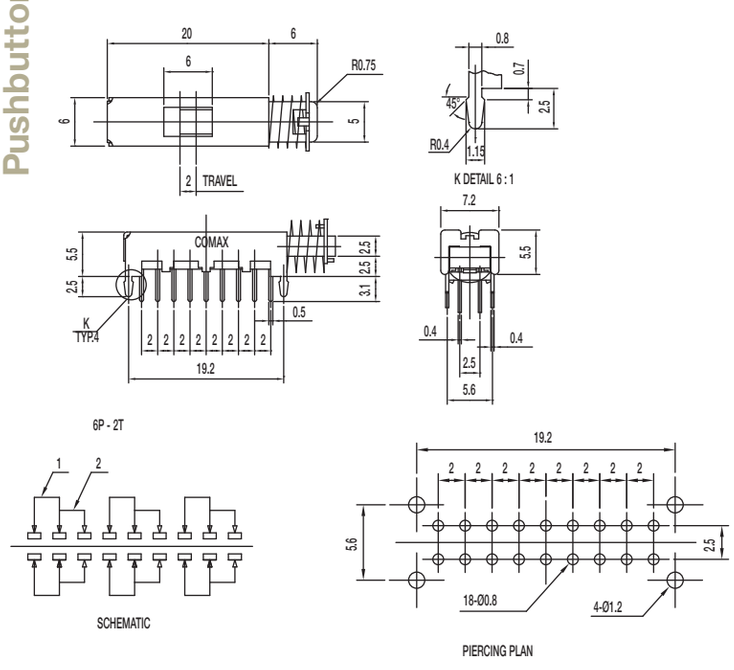

Specifications

CONTACT RATING: 0.3A @ 30 VDC

INITIAL CONTACT RESISTANCE: 30 m ohms max.

INSULATION RESISTANCE: 100 M ohms min.

DIELECTRIC STRENGTH: 500 V AC (50-60 Hz) between open terminals and between the frame and terminal.

OPERATING LIFE: 10,000 cycles with load

OPERATING FORCE: 250 ± 100 gf (2.45 ± 0.98N)

TRAVEL: 2 ± 0.3 mm

OPERATING TEMPERATURE: -20˚C to 70˚C

Materials

FRAME: SPCC

KNOB: POM (UL 94HB)

CONTACT: Silver plated

SPRING: Steel

TERMINAL: Silver plated

PS-22E02-G13 S DPDT SHORTING WITH LOCK

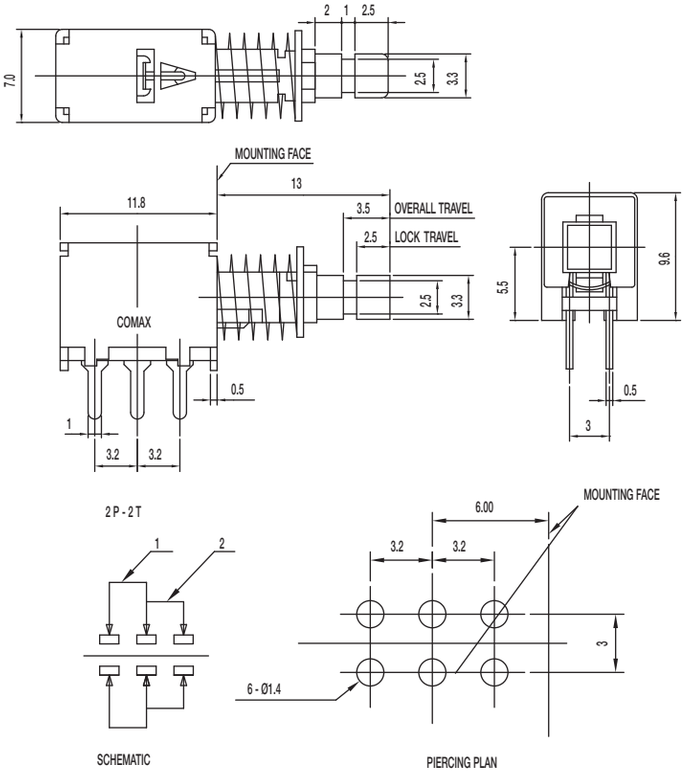

Specifications

CONTACT RATING: 0.3A @ 30 VDC

INITIAL CONTACT RESISTANCE: 30 m ohms max.

INSULATION RESISTANCE: 100 M ohms min.

DIELECTRIC STRENGTH: 500 V AC (50-60 Hz) between open terminals and between the frame and terminal.

OPERATING LIFE: 10,000 cycles with load

OPERATING FORCE: 300 ± 100 gf (2.94 ± 0.98N)

LOCK TRAVEL: 2.5 ± 0.3 mm

TOTAL TRAVEL: 3.5 ± 0.3 mm

OPERATING TEMPERATURE: -20˚C to 70˚C

Materials

FRAME: SPCC

KNOB: POM (UL 94HB)

CONTACT: Silver plated

SPRING: Steel

TERMINAL: Silver plated

PS-22E04-G13 NS DPDT NON-SHORTING WITH LOCK

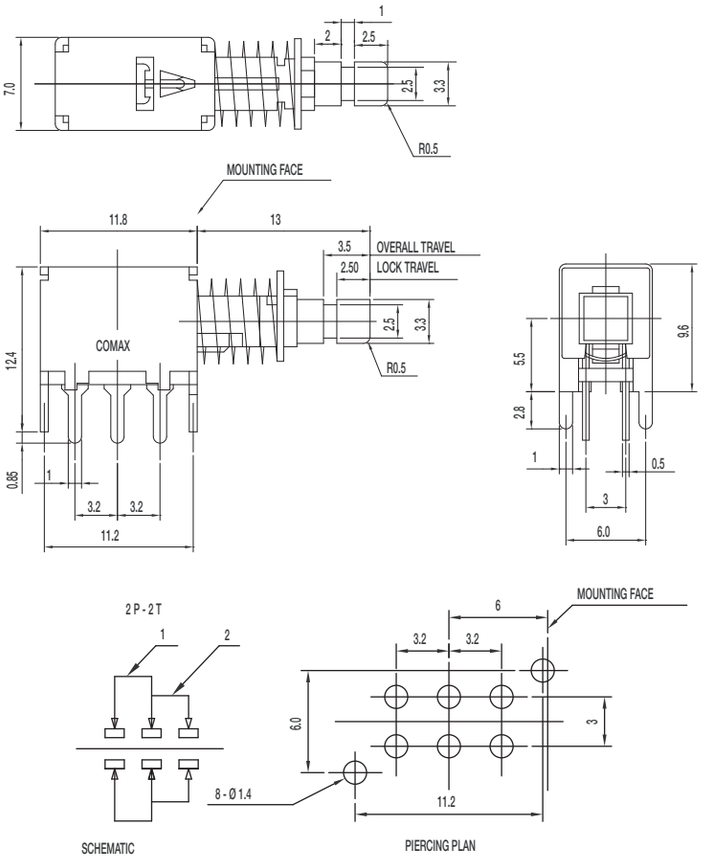

Specifications

CONTACT RATING: 0.3A @ 30 VDC
INITIAL CONTACT RESISTANCE: 30 m ohms max.
INSULATION RESISTANCE: 100 M ohms min.
DIELECTRIC STRENGTH: 500 V AC (50-60 Hz) between open terminals and between the frame and terminal.
OPERATING LIFE: 10,000 cycles with load
OPERATING FORCE: 300 ± 100 gf (2.94 ± 0.98N)
LOCK TRAVEL: 2.5 ± 0.3 mm
TOTAL TRAVEL: 3.5 ± 0.3 mm
OPERATING TEMPERATURE: -20˚C to 70˚C

Materials

FRAME: SPCC
KNOB: POM (UL 94HB)
CONTACT: Silver plated
SPRING: Steel
TERMINAL: Silver plated

PS-22E44-G13 NS DPDT NON-SHORTING WITH LOCK

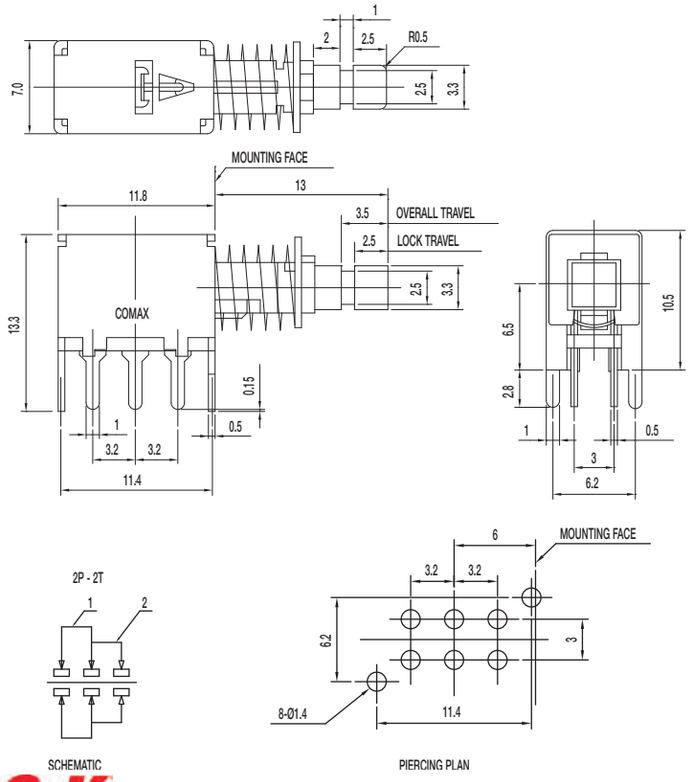

Specifications

CONTACT RATING: 0.3A @ 30 VDC
INITIAL CONTACT RESISTANCE: 30 m ohms max.
INSULATION RESISTANCE: 100 M ohms min.
DIELECTRIC STRENGTH: 500 V AC (50-60 Hz) between open terminals and between the frame and terminal.
OPERATING LIFE: 10,000 cycles with load
OPERATING FORCE: 300 ± 100 gf (2.94 ± 0.98N)
LOCK TRAVEL: 2.5 ± 0.3 mm
TOTAL TRAVEL: 3.5 ± 0.3 mm
OPERATING TEMPERATURE: -20˚C to 70˚C

Materials

FRAME: SPCC
KNOB: POM (UL 94HB)
CONTACT: Silver plated
SPRING: Steel
TERMINAL: Silver plated

Dimensions are shown: mm
Specifications and dimensions subject to change

PS Series
Miniature Pushbutton Switches

PS-22E75-G13 NS DPDT NON-SHORTING WITH LOCK

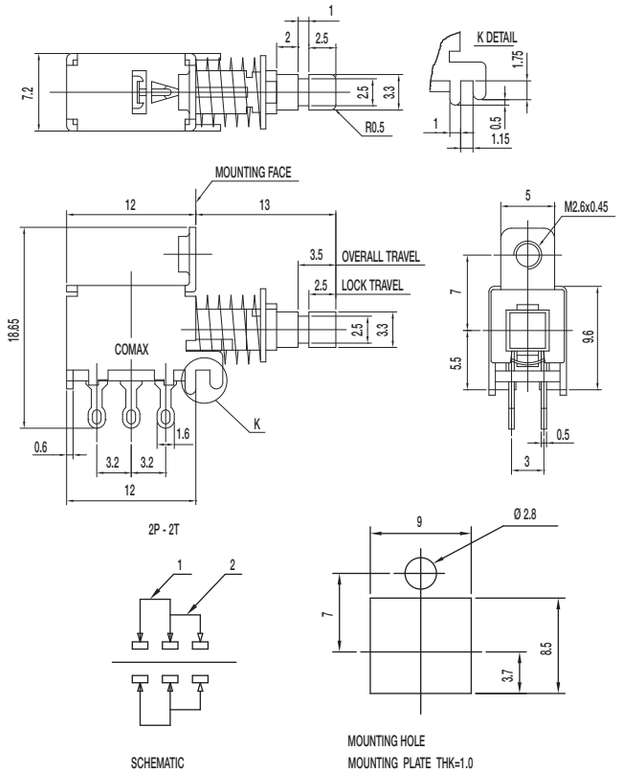

Specifications

CONTACT RATING: 0.3A @ 30 VDC

INITIAL CONTACT RESISTANCE: 30 m ohms max.

INSULATION RESISTANCE: 100 M ohms min.

DIELECTRIC STRENGTH: 500 V AC (50-60 Hz) between open terminals and between the frame and terminal.

OPERATING LIFE: 10,000 cycles with load

OPERATING FORCE: 300 ± 100 gf (2.94 ± 0.98N)

LOCK TRAVEL: 2.5 ± 0.3 mm

TOTAL TRAVEL: 3.5 ± 0.3 mm

OPERATING TEMPERATURE: -20˚C to 70˚C

Materials

FRAME: SPCC

KNOB: POM (UL 94HB)

CONTACT: Silver plated

SPRING: Steel

TERMINAL: Silver plated

PS-22E95-G13 NS DPDT NON-SHORTING WITH LOCK

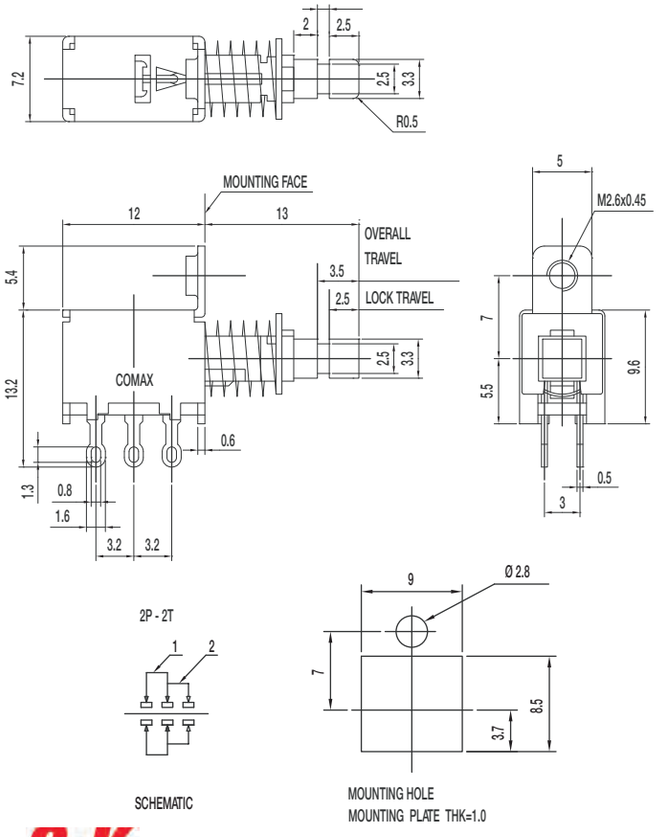

Specifications

CONTACT RATING: 0.3A @ 30 VDC

INITIAL CONTACT RESISTANCE: 30 m ohms max.

INSULATION RESISTANCE: 100 M ohms min.

DIELECTRIC STRENGTH: 500 V AC (50-60 Hz) between open terminals and between the frame and terminal.

OPERATING LIFE: 10,000 cycles with load

OPERATING FORCE: 300 ± 100 gf (2.94 ± 0.98N)

LOCK TRAVEL: 2.5 ± 0.3 mm

TOTAL TRAVEL: 3.5 ± 0.3 mm

OPERATING TEMPERATURE: -20˚C to 70˚C

Materials

FRAME: SPCC

KNOB: POM (UL 94HB)

CONTACT: Silver plated

SPRING: Steel

TERMINAL: Silver plated

Dimensions are shown: mm
Specifications and dimensions subject to change

PS-22F02-G13 S DPDT SHORTING

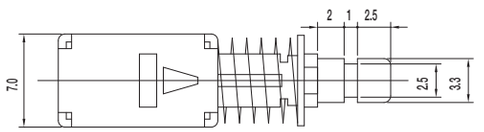

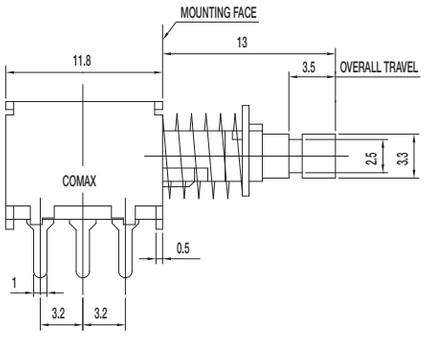

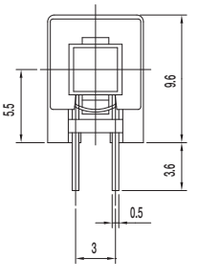

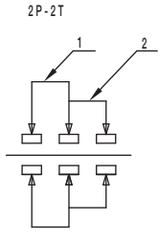

SCHEMATIC

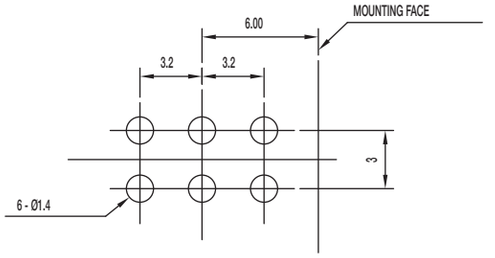

PIERCING PLAN

Specifications

CONTACT RATING: 0.3A @ 30 VDC
INITIAL CONTACT RESISTANCE: 30 m ohms max.
INSULATION RESISTANCE: 100 M ohms min.
DIELECTRIC STRENGTH: 500 V AC (50-60 Hz) between openterminals and between the frame and terminal.
OPERATING LIFE: 10,000 cycles with load
OPERATING FORCE: 300 ± 100 gf (2.94 ± 0.98N)
TOTAL TRAVEL: 3.5 ± 0.3 mm
OPERATING TEMPERATURE: -20˚C to 70˚C

Materials

FRAME: SPCC
KNOB: POM (UL 94HB)
CONTACT: Silver plated
SPRING: Steel
TERMINAL: Silver plated

PS-22F04-G13 NS DPDT NON_SHORTING

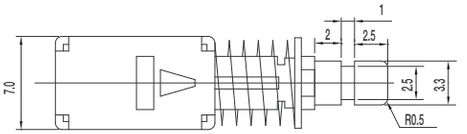

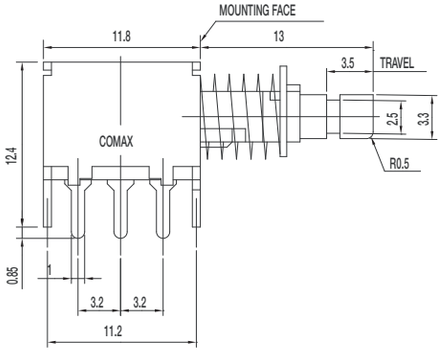

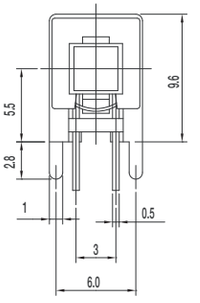

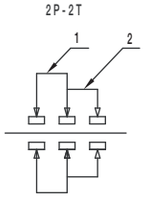

SCHEMATIC

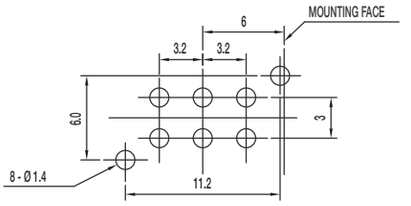

PIERCING PLAN

Specifications

CONTACT RATING: 0.3A @ 30 VDC
INITIAL CONTACT RESISTANCE: 30 m ohms max.
INSULATION RESISTANCE: 100 M ohms min.
DIELECTRIC STRENGTH: 500 V AC (50-60 Hz) between open terminals and between the frame and terminal.
OPERATING LIFE: 10,000 cycles with load
OPERATING FORCE: 300 ± 100 gf (2.94 ± 0.98N)
TOTAL TRAVEL: 3.5 ± 0.3 mm
OPERATING TEMPERATURE: -20˚C to 70˚C

Materials

FRAME: SPCC
KNOB: POM (UL 94HB)
CONTACT: Silver plated
SPRING: Steel
TERMINAL: Silver plated

PS Series
Miniature Pushbutton Switches

PS-22F24-G13 NS DPDT NON_SHORTING

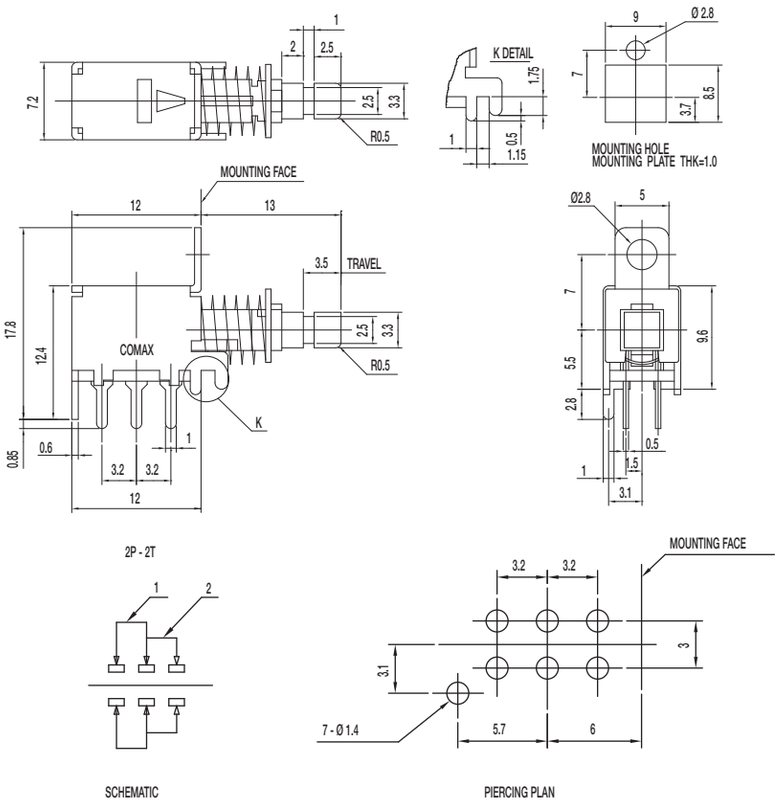

Specifications

CONTACT RATING: 0.3A @ 30 VDC
INITIAL CONTACT RESISTANCE: 30 m ohms max.
INSULATION RESISTANCE: 100 M ohms min.
DIELECTRIC STRENGTH: 500 V AC (50-60 Hz) between open terminals and between the frame and terminal.
OPERATING LIFE: 10,000 cycles with load
OPERATING FORCE: 300 ± 100 gf (2.94 ± 0.98N)
TOTAL TRAVEL: 3.5 ± 0.3 mm
OPERATING TEMPERATURE: -20˚C to 70˚C

Materials

FRAME: SPCC
KNOB: POM (UL 94HB)
CONTACT: Silver plated
SPRING: Steel
TERMINAL: Silver plated

PS-22F44-G13 NS DPDT NON_SHORTING

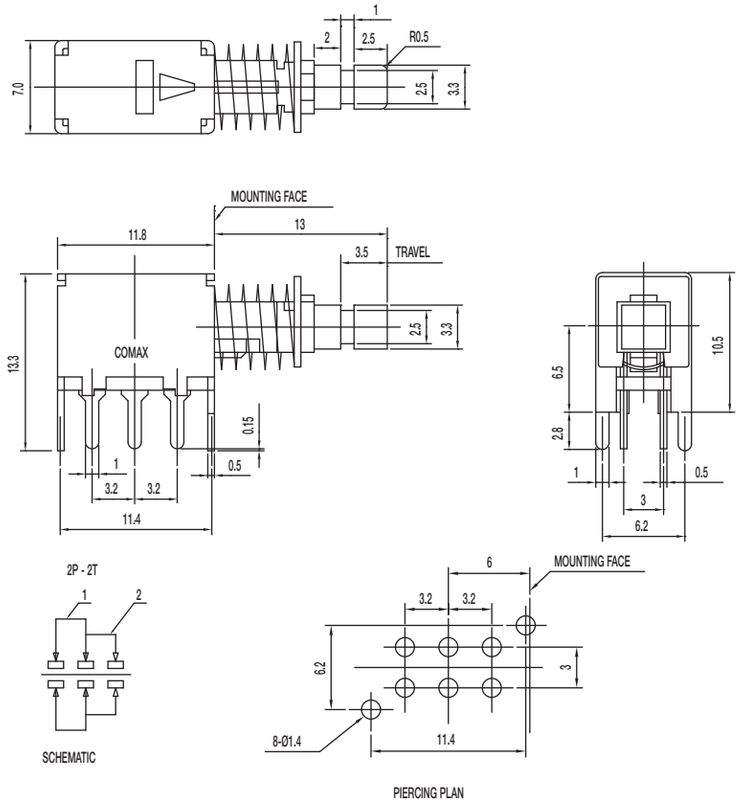

Specifications

CONTACT RATING: 0.3A @ 30 VDC
INITIAL CONTACT RESISTANCE: 30 m ohms max.
INSULATION RESISTANCE: 100 M ohms min.
DIELECTRIC STRENGTH: 500 V AC (50-60 Hz) between open terminals and between the frame and terminal.
OPERATING LIFE: 10,000 cycles with load
OPERATING FORCE: 300 ± 100 gf (2.94 ± 0.98N)
TOTAL TRAVEL: 3.5 ± 0.3 mm
OPERATING TEMPERATURE: -20˚C to 70˚C

Materials

FRAME: SPCC
KNOB: POM (UL 94HB)
CONTACT: Silver plated
SPRING: Steel
TERMINAL: Silver plated

Dimensions are shown: mm
Specifications and dimensions subject to change

Tactile Switches
Product Selection Guide

Surface Mount							
Series	**KXT2**	**KXT3**	**KMT2**	**KMT0**	**KMR 2-8**	**KMS**	**PTS525**
Size on PCB L x W (mm)	3,9 x 3	3 x 2	3 x 2,6	3 x 2,6	4,2 x 2,8	4,2 x 3,55	5,2 x 5,2
Total Height (mm)	1,05	0,6	0,65	0,65	1,9 2,5	1,42	0,8 and 1,5
Travel (mm)	0,1	0,13	0,15	0,15	0,2 to 0,35	0,25 to 0,3	0,3
Actuation Force (N)	100 gf 200 gf	100 gf 160gf 240 gf 330 gf	1,0 1,6	1,0; 1,6 2,3; 3,4	1,2; 2,0 3,0; 4,0	2,0 3,0	1,6 2,6
Contact Type	Silver	Silver	Silver	Silver	Silver / Gold	Silver / Gold	Silver
Max. Voltage (V)	12	15	32	32	32	32	32
Max. Switching Power (VA)	0,5	0,5	0,5	0,5	1 / 0,2	1 / 0,2	1
Life Cycles	100,000	300,000 500,000	150,000	300,000/600,000 1,000,000	100,000 300,000	100,000	100,000
IP Rating	IP64	IP64	IP54	IP68	IP40	IP40	IP40
Page Number	B-5	B-7	B-9	B-11	B-13	B-23	B-25

Surface Mount	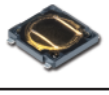						
Series	**PTS530**	**PTS540**	**PTS810**	**PTS820**	**PTS830**	**PTS840**	**KSR**
Size on PCB L x W (mm)	4,5 x 4,5	3,7 x 3,7	4,2 x 3,2	3,9 x 2,9	3,5 x 2,6	3,5 x 3,55	7,15 x 3,8 7,3 x 3,8
Total Height (mm)	0,55 and 0,65	0,55 / 0,65	2,5	1,5/2,0/2,5	1,4	1,35	2,5
Travel (mm)	0,2	0,15	0,15/0,2	0,2	0,15	0,2	0,3 to 0,5
Actuation Force (N)	1,0; 1,6; 2,0; 2,6; 4,0; 6,0	160 gf 230 gf	1,6; 2,6; 4,0; 6,0	1,6 2,5	160 gf 450 gf	1,6 2,2	1,2; 2,0; 3,0; 4,5
Contact Type	Silver	Silver	Silver	Silver	Silver	Silver	Silver / Gold
Max. Voltage (V)	12	12	16	12	12	12	32
Max. Switching Power (VA)	–	–	–	-	-	-	1 / 0,2
Life Cycles	150,000 to 1,000,000	300,000 500,000	50,000 to 150,000	100,000 200,000	200,000 500,000	100,000	100,000 200,000
IP Rating	-	IP40	IP40	IP40	IP40	IP40	IP50
Page Number	B-29	B-31	B-33	B-35	B-38	B-42	B-45

* Other options available by request

Dimensions are shown: mm
Specifications and dimensions subject to change

Surface Mount Thru-Hole Options				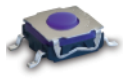	
Series	**KSS**	**KSC4V2**	**KSC 1 - 10**	**KSE**	**KT**
Footprint	5,5 x 4,4	2 holes ø 1,1 2 pads 1,5 x 0,8	J 6,8 x 6,2 G 10 x 6,2	6,8 x 6,2	SA 7,5x5 SA2 7,5x7
Total Height (mm)	1,7	5,0*		3,1 / 4,3	6,6 7,11 with tab
Travel (mm)	0,3	0,7*	0,20 to 0,75 *	0,3	0,3 to 0,5
Actuation Force (N)	2 2,5 4	3.5*	1,1 to 5,5 *	1.5 2.25	3
Contact Type	Silver / Gold	Silver / Gold	Silver / Gold	Silver	Silver / Gold
Max. Voltage (V)	32	32	32	32	50
Max. Switching Power (VA)	1 / 0,2	1 / 0,2	1 / 0.2	1	1 / 0.2
Life Cycles	100,000	300,000	100,000 to 1,000,000	300,000	100,000
IP Rating	IP40	IP67	IP67	IP67	
Page Number	B-49	B-63	B-51	B-65	B-68

Surface Mount Thru-Hole Options							
Series	**K5AT**	**K8**	**K5V**	**KSF/KSI**	**KSA**	**KSA-V**	**KSA MKII**
Footprint	G 8,4 x 10,8	G 8,4 x 10,8	8 x 9 x 17 / 9 x 13	7,62 x 5,08	7,62 x 5,08	7,62 x 2,54	7,62 x 5,08
Total Height (mm)	6,1	6	9 / 13	2,6	4,7 button option	8	4,7
Travel (mm)	0,5	0,45	1,2	0,3 to 0,5	0,3 to 0,5	0,3 to 0,5	0,3 to 0,5
Actuation Force (N)	4.0	4.0	4.0	1.3 3.0 1.6 5.0	1.3 3.0 5.0	1.3 3.0 5.0	1.3 3.0 5.0
Contact Type	Gold	Silver	Gold	Silver / Gold	Silver / Gold	Silver / Gold	Silver / Gold
Max. Voltage (V)	32	32	32	32	32	32	32
Max. Switching Power (VA)	1	1	1	1 / 0.2	1 / 0.2	1 / 0.2	1 / 0.2
Life Cycles	100,000	300,000	25,000	100,000	100,000	100,000	100,000 1,000,000
IP Rating	IP40	IP40	IP40	IP60	IP60	IP60	IP67
Page Number	B-73	B-75	B-78	B-82	B-84	B-84	B-89

* Other options available by request

Tactile Switches
Product Selection Guide

Surface Mount Thru-Hole Options					
Series	**KSJ**	**KSJ-V**	**KSJ**	**KSJ-V**	**PTS635**
Footprint	7,62 x 5,08	7,62 x 2,54	7,62 x 5,08	7,62 x 2,54	6 x 3,5
Total Height (mm)	9,9	8	6,65	8	2,5 4,3 5,0
Travel (mm)	0,3 to 0,5	0,3 to 0,5	0,55 to 0,7	0,55 to 0,7	0,25
Actuation Force (N)	1,3 3,0	1,3 3,0	2,0 3,0	2,0 3,0	1,3 2,0 2,6
Contact Type	Silver / Gold	Silver / Gold	Silver / Gold	Silver / Gold	Silver
Max. Voltage (V)	32	32	32	32	12
Life Cycles	100,000	100,000	100,000 30,000	100,000 30,000	20,000
IP Rating	IP60	IP60	IP60	IP60	IP40
Page Number	B-84	B-84	B-91	B-91	B-93

Surface Mount Thru-Hole Options			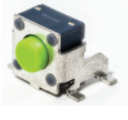			
Series	**PTS641**	**PTS645**	**PTS645-V**	**PTS125**	**ITS**	
Footprint	6,3 x 6,4	6 x 6	7,0 x 2,5	12 x 12	variety of sizes available	
Total Height (mm)	2,5 3,1 3,4	4,3; 5,0; 7,0; 9,5;	7,1	4,3 7,3 Sq. 8,5 12,0		
Travel (mm)	0,20 / 0,30	0,25	0,25	0,30	0,25	
Actuation Force (N)	160 gf 250 gf 320 gf	1,3; 1,6 2,0; 2,6	1,3; 1,6 2,0; 2,6	1,6 2,6	160 gf	
Contact Type	Silver	Silver	Silver	Silver	Silver	
Max. Voltage (V)	12	12	12	12	12	
Life Cycles	100,000	100,000	100,000	200,000	50,000	
IP Rating	IP40	IP40	IP40	IP40	IP40	
Page Number	B-96	B-98	B-103	B-105	B-109	

KXT2 Series
Double Action Ultra Low Profile Top Actuated

Features

- ***3.9 x 3.0 mm footprint***
- ***1.05 mm thickness***
- ***Dual action***

Typical Applications

- ***Wearable electronics***
- ***Mobile Phones***
- ***Portable Electronics***

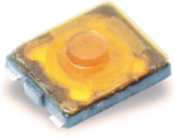

Specification

FUNCTION: momentary action
CONTACT ARRANGEMENT: Dual action = SPDT, N.O.
TERMINALS: G type for SMT
TRAVEL: 0.1 mm ± 0.05 mm
TRAVEL: 0.2 mm + 0.1 / - 0.05 mm

Mechanical

	Operating force gf		Operating Life
KXT 211 LHS	Push force 1 Push force 2	100 ± 40 200 ± 50	100,000

Electrical

MAXIMUM VOLTAGE:	12 VDC
MAXIMUM CURRENT DC:	50 mA
DIELECTRIC STRENGTH:	250 V (50 Hz, 1 min.)
CONTACT RESISTANCE:	≤ 500 mΩ
INSULATION RESISTANCE:	100 MΩ
BOUNCE TIME:	≤ 10 ms

Environmental

OPERATING TEMPERATURE: -40˚C to 85˚C
STORAGE TEMPERATURE: -40˚C to 85˚C

Process

SOLDERING: This component is suited to the following methods:
Infrared Reflow Soldering in accordance with IEC61760-1

Packaging

In reels of 6,000 pieces
Dimensions of reels according to EIA RS481 or IEC 2863
External diameter 178 mm ± 2mm

NOTE: Specifications listed above are for switches with standard options.
For information on specific and custom switches, consult Customer Service Center.

Part Number Description

For any part number different from those listed above, please consult your local representative.

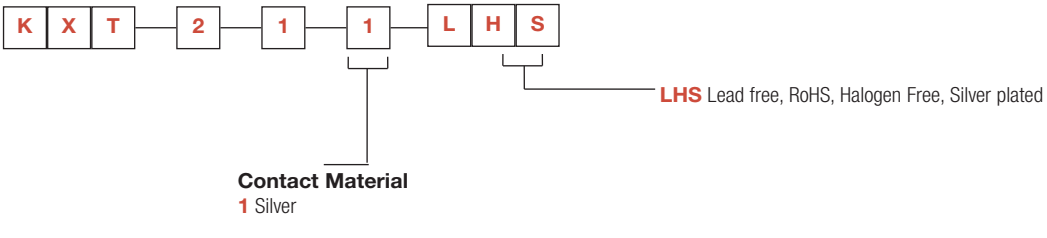

KXT2 Series
Double Action Ultra Low Profile Top Actuated

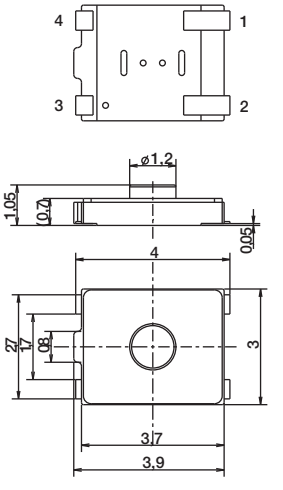

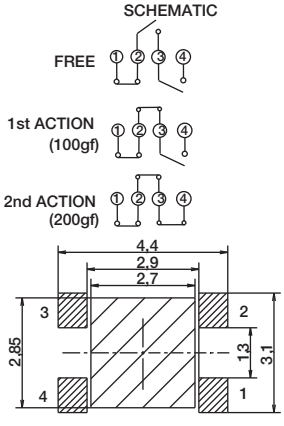

RECOMMENDED PCB LAYOUT

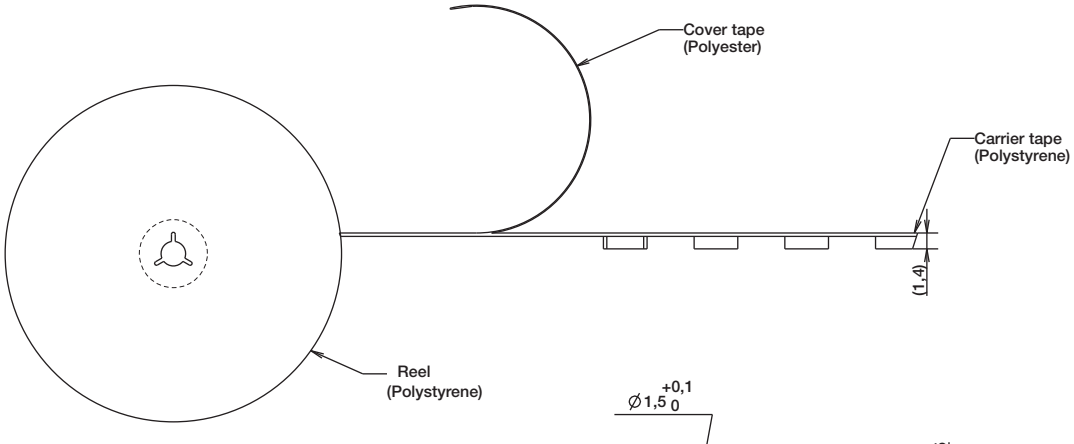

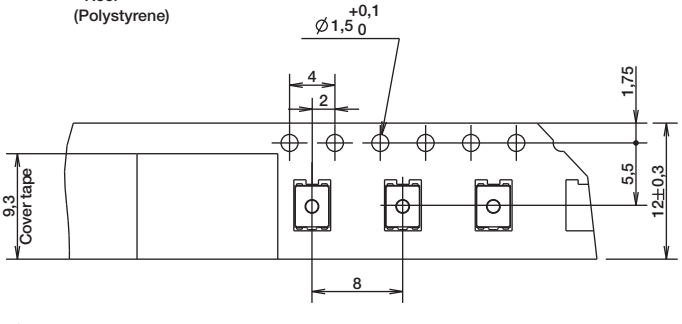

CARRIER TAPE

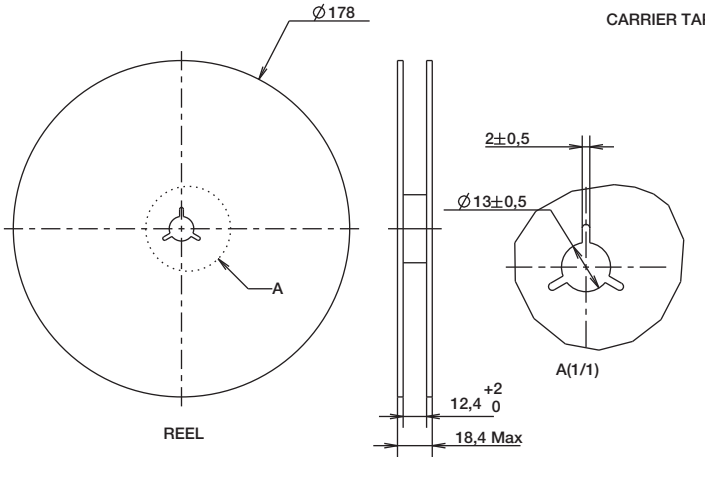

REEL

Dimensions are shown: mm
Specifications and dimensions subject to change

KXT3 Series
Ultra Low Profile Top Actuated

Features

- *3.0 x 2.0 mm footprint*
- *0.6 mm thickness*
- *High number of cycle*

Typical Applications

- *Wearable electronics*
- *In-Ear headphones, Earbuds*
- *Mobile Phones*
- *Portable Electronics*
- *Hearing Aids*

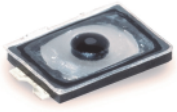

Specification

FUNCTION: momentary action
CONTACT ARRANGEMENT: 1 make contact = SPST, N.O.
TERMINALS: G type for SMT
TRAVEL: 0.13 mm ± 0.05 mm

Mechanical

	Operating force gf	Operating Life	Casing Color
KXT 311 LHS	100 ± 50	300,000	Black
KXT 321 LHS	160 ± 50	500,000	Black
KXT 331 LHS	240 ± 70	500,000	Black
KXT 341 LHS	330 ± 70	300,000	Black

Electrical

MAXIMUM VOLTAGE: 15 VDC
MAXIMUM CURRENT DC: 20 mA
DIELECTRIC STRENGTH: (50/60 Hz, 1 min) 250 Vrms
CONTACT RESISTANCE: ≤ 500 mΩ
INSULATION RESISTANCE: ≥ 50 MΩ
BOUNCE TIME: ≤ 10 ms

Environmental

OPERATING TEMPERATURE: -40˚C to 85˚C
STORAGE TEMPERATURE: -40˚C to 85˚C

Process

SOLDERING: This component is suited to the following methods:
Infrared Reflow Soldering in accordance with IEC61760-1

Packaging

In reels of 8,500 pieces
Dimensions of reels according to EIA 481B
External diameter 330 mm

NOTE: Specifications listed above are for switches with standard options.
For information on specific and custom switches, consult Customer Service Center.

Part Number Description

For any part number different from those listed above, please consult your local representative.

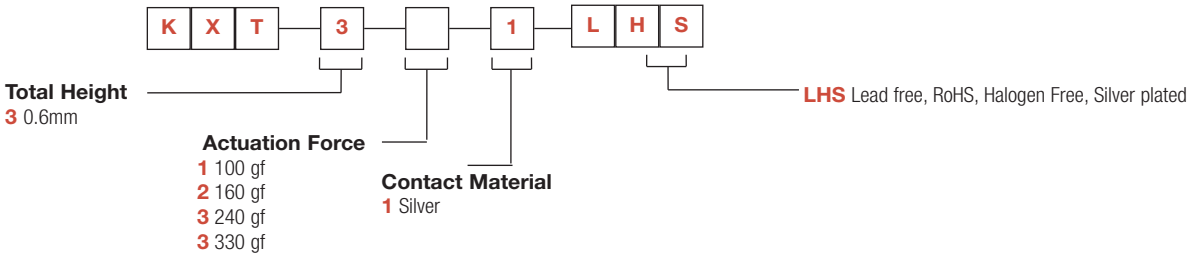

KXT3 Series
Ultra Low Profile Top Actuated

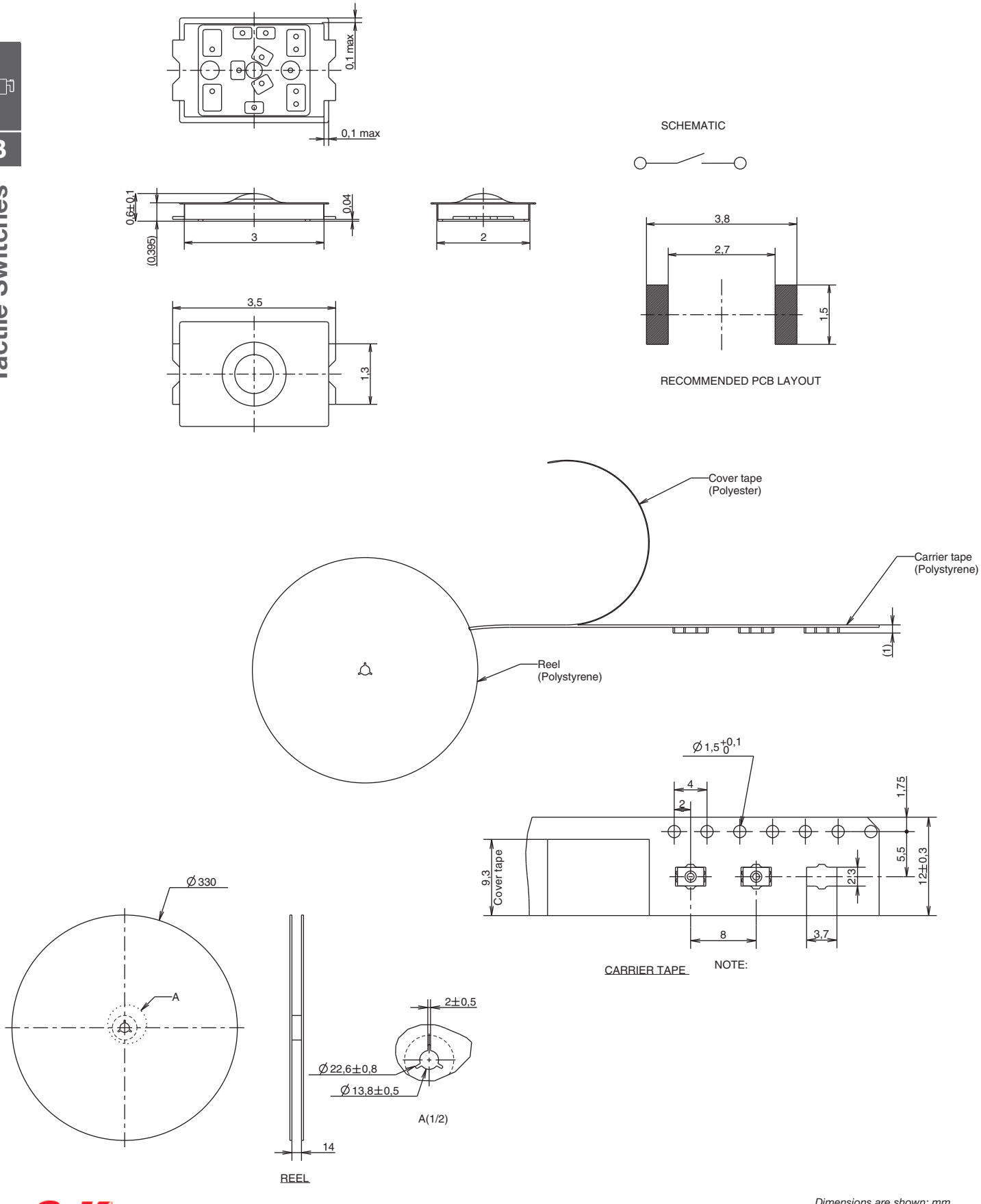

Features

- *Smallest footprint*
- *High number of cycles within the smallest packaging*
- *Smallest thickness with integrated actuator*
- *Ground pin option*
- *Halogen free*

Typical Applications

- *Mobile Phones*
- *Hearing Aids*
- *MP3 accessories*
- *Bluetooth Headset*

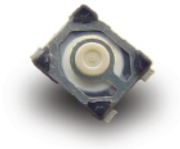

Specification

FUNCTION: momentary action
CONTACT ARRANGEMENT: 1 make contact = SPST, N.O.
TERMINALS: Gullwing type for SMT

Mechanical

Type G and NG	Operating force Newtons (grams)	Operating Life	Tactile Feeling	Travel mm
KMT 211 HF LFS	1.0 (100) ± 0.25	150,000	≥ 10%	0.15 ± 0.1
KMT 221 HF LFS	1.6 (160) ± 0.40	150,000	≥ 30%	0.15 ± 0.1

Electrical

	Silver
MAXIMUM POWER:	0.5 VA
MAXIMUM VOLTAGE:	32 VDC
MINIMUM VOLTAGE:	20 mV
MAXIMUM CURRENT DC:	50 mA
MINIMUM CURRENT DC:	1 mA
DIELECTRIC STRENGTH:	≥ 250 Vrms (1mn)
CONTACT RESISTANCE:	≤ 150 mΩ
INSULATION RESISTANCE:	≥ 50 MΩ
BOUNCE TIME:	≤ 6 ms

Environmental

	Silver
OPERATING TEMPERATURE:	-40˚C to 85˚C
STORAGE TEMPERATURE:	-55˚C (10 days) +85˚C (4 days)

Process

SOLDERING: This component is suited to the following methods:
– Infrared Reflow Soldering in accordance with IEC61760-1

Packaging

In reels of 4,000 pieces.
Dimensions of reels according to EIA 481B
External diameter 180 mm

NOTE: Specifications listed above are for switches with standard options.
For information on specific and custom switches, consult Customer Service Center.

Part Number Description

For any part number different from those listed above, please consult your local representative.

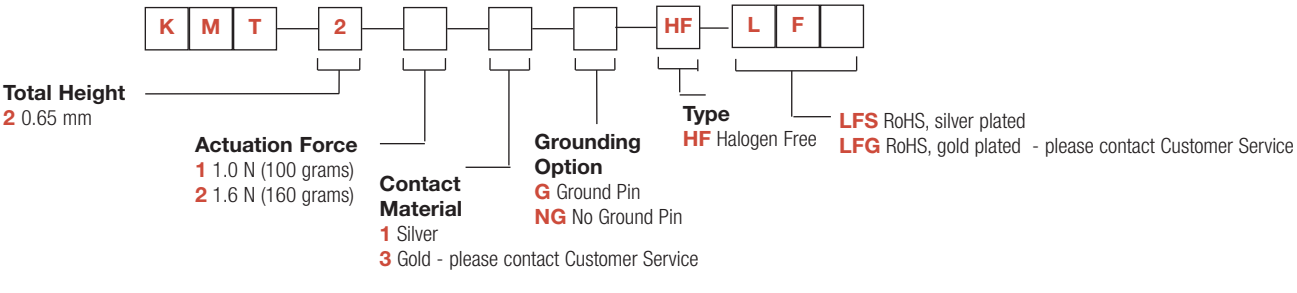

KMT Series – No Ground Pin

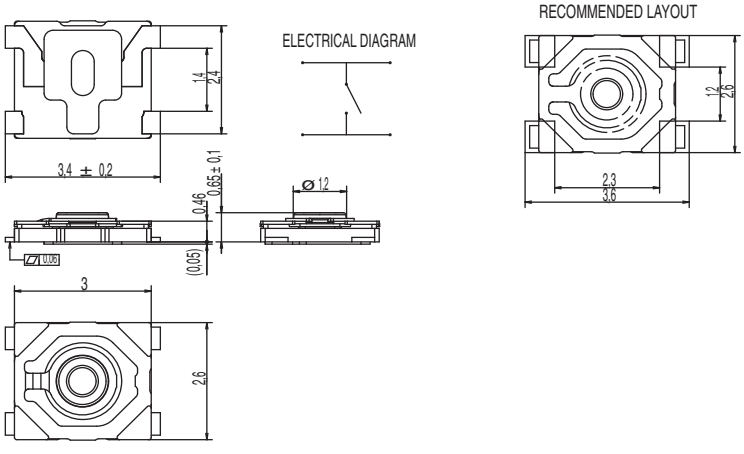

KMT Series – With Ground Pin

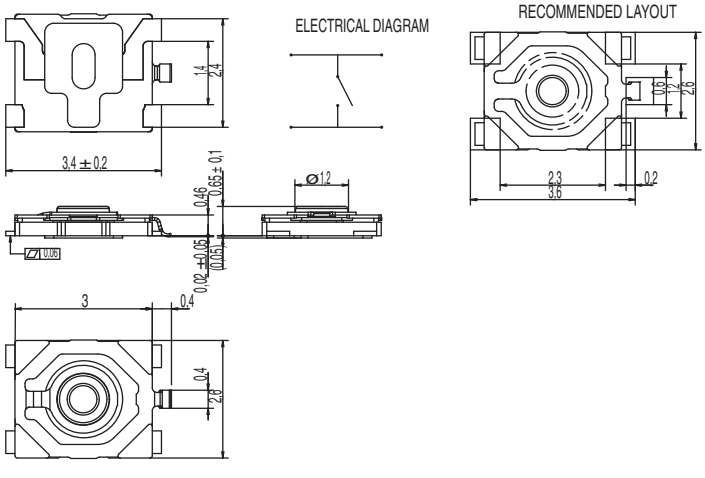

TAPE & REEL

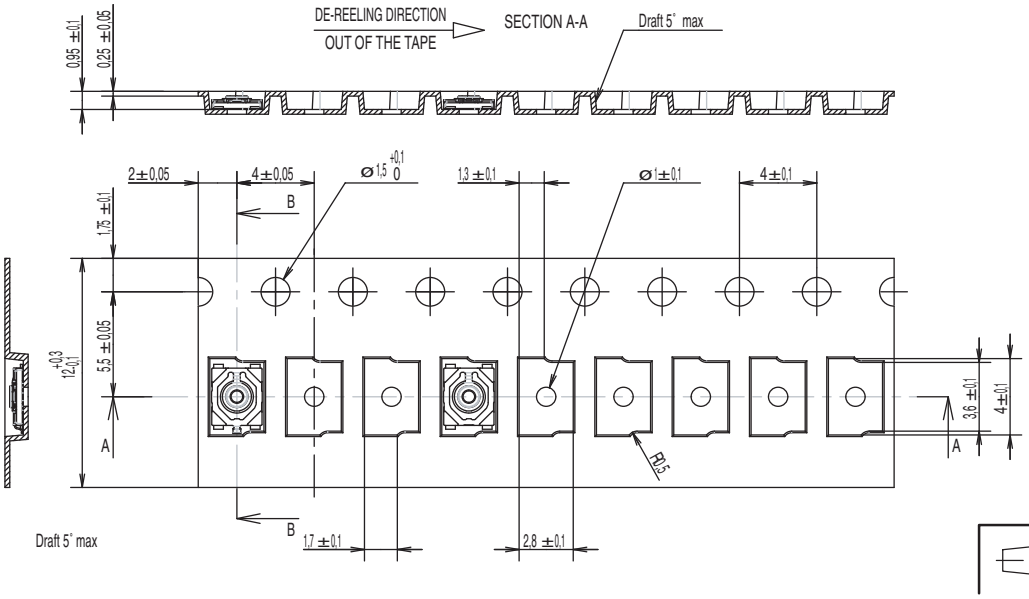

First Angle Projection

Dimensions are shown: mm
Specifications and dimensions subject to change

KMT0 Series
Nano-Miniature SMT Top Actuated

Features

- *Smallest footprint*
- *Smallest thickness with integrated actuator*
- *Extended life cycles*
- *IP68*
- *Ultra low current capabilities*

Typical Applications

- *Mobile Phones*
- *Hearing Aids*
- *MP3 accessories*
- *Bluetooth Headset*
- *Automotive keyless entry system*
- *Smoke and CO detectors*
- *E-readers*
- *Home automation remote controls*

Specification

FUNCTION: momentary action, normally open
CONTACT ARRANGEMENT: 1 make contact = SPST, N.O.
TERMINALS: J lead type for SMT

Mechanical

TRAVEL (mm): 0.15 ± 0.1

	Operating force Newtons (grams)	Tactile Feeling	Operating Life
KMT011NGJLHS	1.0 (100) ± 25%	≥ 10%	300,000
KMT021NGJLHS	1.6 (160) ± 25%	≥ 30%	300,000
KMT071NGJLHS	2.3 (230) ± 25%	≥ 30%	300,000
KMT031NGJLHS	3.4 (340) ± 25%	≥ 30%	300,000

	Operating force Newtons (grams)	Tactile Feeling	Operating Life
KMT012NGJLHS	1.0 (100) ± 25%	≥ 10%	1,000,000
KMT022NGJLHS	1.6 (160) ± 25%	≥ 30%	600,000
KMT072NGJLHS	2.3 (230) ± 25%	≥ 30%	600,000

Electrical

MAXIMUM POWER:	0.5 VA
MAXIMUM VOLTAGE:	32 VDC
MINIMUM VOLTAGE:	20 mV
MAXIMUM CURRENT DC:	50 mA
MINIMUM CURRENT DC:	1 mA
DIELECTRIC STRENGTH:	≥ 250 Vrms (1mn)
CONTACT RESISTANCE:	≤ 150 mΩ
INSULATION RESISTANCE:	≥ 50 MΩ
BOUNCE TIME:	≤ 6 ms

Environmental

OPERATING TEMPERATURE: -40˚C to 85˚C
STORAGE TEMPERATURE: -55˚C (10 days) +85˚C (4 days)

Process

SOLDERING: This component is suited to the following methods:
– Infrared Reflow Soldering in accordance with IEC61760-1

Packaging

In reels of 5,000 pieces.
Dimensions of reels according to EIA 481B
External diameter 180 mm

NOTE: Specifications listed above are for switches with standard options.
For information on specific and custom switches, consult Customer Service Center.

Part Number Description

For any part number different from those listed above, please consult your local representative.

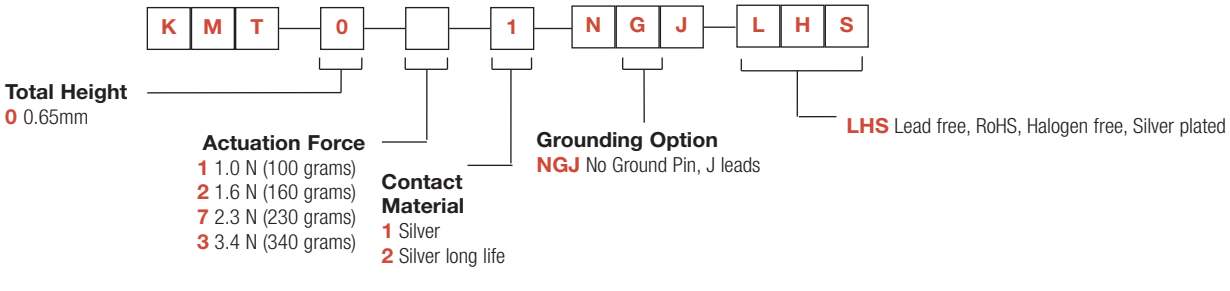

KMT0 Series
Nano-Miniature SMT Top Actuated

Minimum actuator diameter is 1.0 mm. It is recommended to enlarge this diameter to a full flat surface covering the switch.

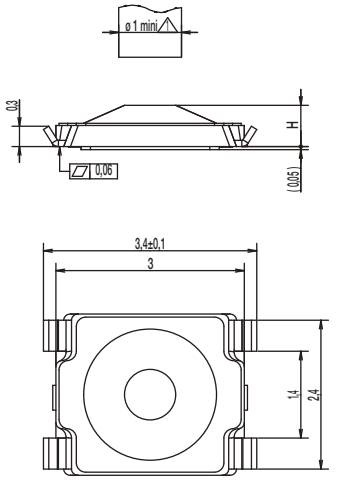

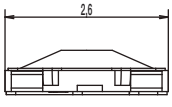

RECOMMENDED LAYOUT
ELECTRICAL DIAGRAM

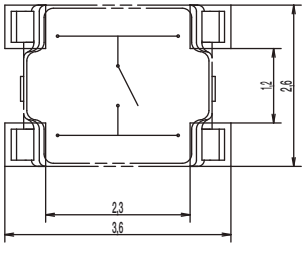

TAPE & REEL

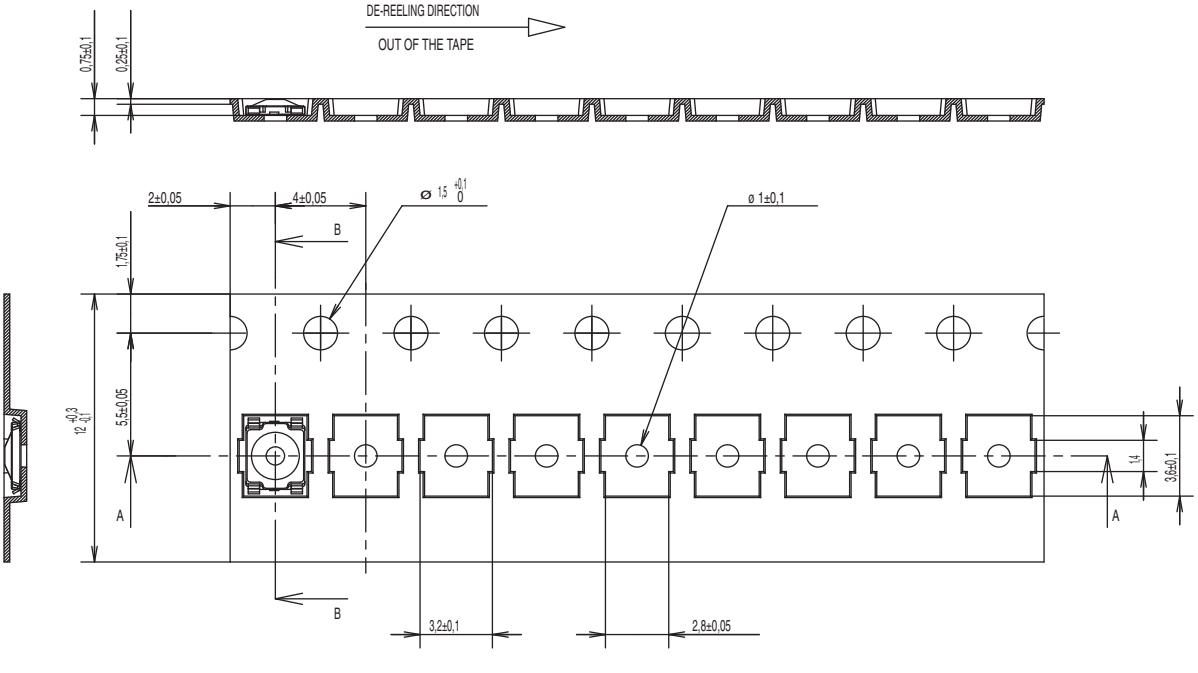

First Angle Projection

Dimensions are shown: mm
Specifications and dimensions subject to change

KMR 2 Series
Microminiature SMT Top Actuated

Features/Benefits

- ***Small footprint***
- ***4 actuation forces***
- ***Excellent tactile feel***
- ***Ultra low current capabilities***
- ***IP40***

Typical Applications

- ***Automotive***
- ***Industrial electronics***
- ***Medical equipment***

Specification

FUNCTION: momentary action
CONTACT ARRANGEMENT: 1 make contact = SPST, N.O.
TERMINALS: Gullwing type for SMT

Mechanical

Type G and NG See description below	Operating force N (grs)	Operating life (cycles)	Travel (mm)
KMR211 LFS	1.2 (120) ± 0.30	200,000	0.20 mm ± 0.1
KMR211 ULC LFS	1.2 (120) ± 0.30	200,000	0.20 mm ± 0.1
KMR213 LFG	1.2 (120) ± 0.30	200,000	0.20 mm ± 0.1
KMR213 ULC LFG	1.2 (120) ± 0.30	200,000	0.20 mm ± 0.1
KMR221 LFS	2.0 (200) ± 0.50	200,000	0.25 mm ± 0.1
KMR221 ULC LFS	2.0 (200) ± 0.50	200,000	0.25 mm ± 0.1
KMR223 LFG	2.0 (200) ± 0.50	200,000	0.25 mm ± 0.1
KMR223 ULC LFG	2.0 (200) ± 0.50	200,000	0.25 mm ± 0.1
KMR231 LFS	3.0 (300) ± 0.75	150,000	0.25 mm ± 0.1
KMR231 ULC LFS	3.0 (300) ± 0.75	150,000	0.25 mm ± 0.1
KMR232 LFS	3.0 (300) ± 0.75	300,000	0.25 mm ± 0.1
KMR232 ULC LFS	3.0 (300) ± 0.75	300,000	0.25 mm ± 0.1
KMR233 LFG	3.0 (300) ± 0.75	150,000	0.25 mm ± 0.1
KMR233 ULC LFG	3.0 (300) ± 0.75	150,000	0.25 mm ± 0.1
KMR241 LFS	4.0 (400) ± 1.00	100,000	0.30 mm ± 0.1
KMR241 ULC LFS	4.0 (400) ± 1.00	100,000	0.30 mm ± 0.1
KMR242 LFS	4.0 (400) ± 1.00	200,000	0.30 mm ± 0.1
KMR242 ULC LFS	4.0 (400) ± 1.00	200,000	0.30 mm ± 0.1
KMR243 LFG	4.0 (400) ± 1.00	100,000	0.30 mm ± 0.1
KMR243 ULC LFG	4.0 (400) ± 1.00	100,000	0.30 mm ± 0.1

Electrical

	Silver	Gold
MAXIMUM POWER:	1 VA	0.2 VA
MAXIMUM VOLTAGE:	32 VDC	32 VDC
MINIMUM VOLTAGE:	20 mVDC	20 mVDC
MAXIMUM CURRENT:	50 mA	10 mA
MINIMUM CURRENT:	1 mA*	1 mA*
DIELECTRIC STRENGTH:	≥ 250 Vrms	
CONTACT RESISTANCE:	≤ 100 mΩ	
INSULATION RESISTANCE:	≥ 1GΩ	
BOUNCE TIME:	≤ 3 ms	

*For ULC version minimum current is 1µA at 1.8 VDC

Environmental

	Silver	Gold
OPERATING TEMPERATURE:	-40˚C to 85˚C	-40˚C to 125˚C
STORAGE TEMPERATURE:	-55˚C to 85˚C	-55˚C to 125˚C

Process

Infrared Reflow Soldering in accordance with IEC61760-1

Packaging

In reels of 7,000 pieces
External diameter 330 mm ± 2 mm

NOTE: Specifications listed above are for switches with standard options.
For information on specific and custom switches, consult Customer Service Center.

TACTILE FEELING: KMR 2 series with actuation force in 2N - 3N - 4N: ≥ 30%
KMR 2 series with actuation force in 1.2N: ≥ 20%

Part Number Description

For any part number different from those listed above, please consult your local representative.

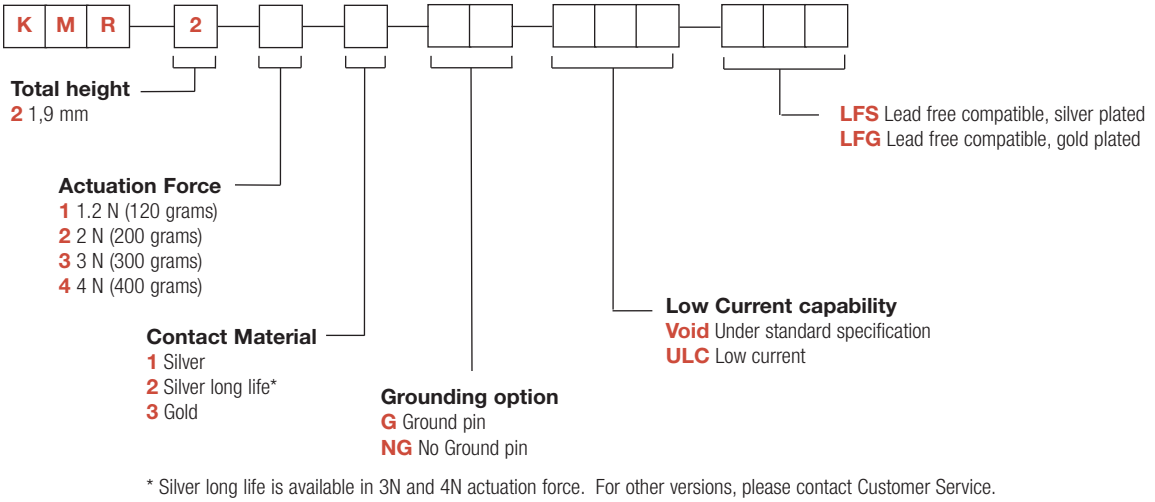

* Silver long life is available in 3N and 4N actuation force. For other versions, please contact Customer Service.

Dimensions are shown: mm
Specifications and dimensions subject to change

KMR 2 Series
Microminiature Tact Switch for SMT

KMR 2 Series - 1.9 mm height

PCB layout shown with ground pin option

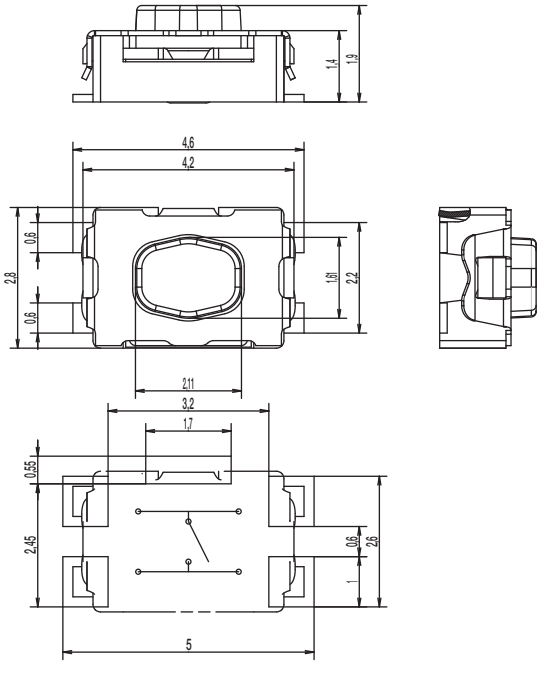

TAPE & REEL

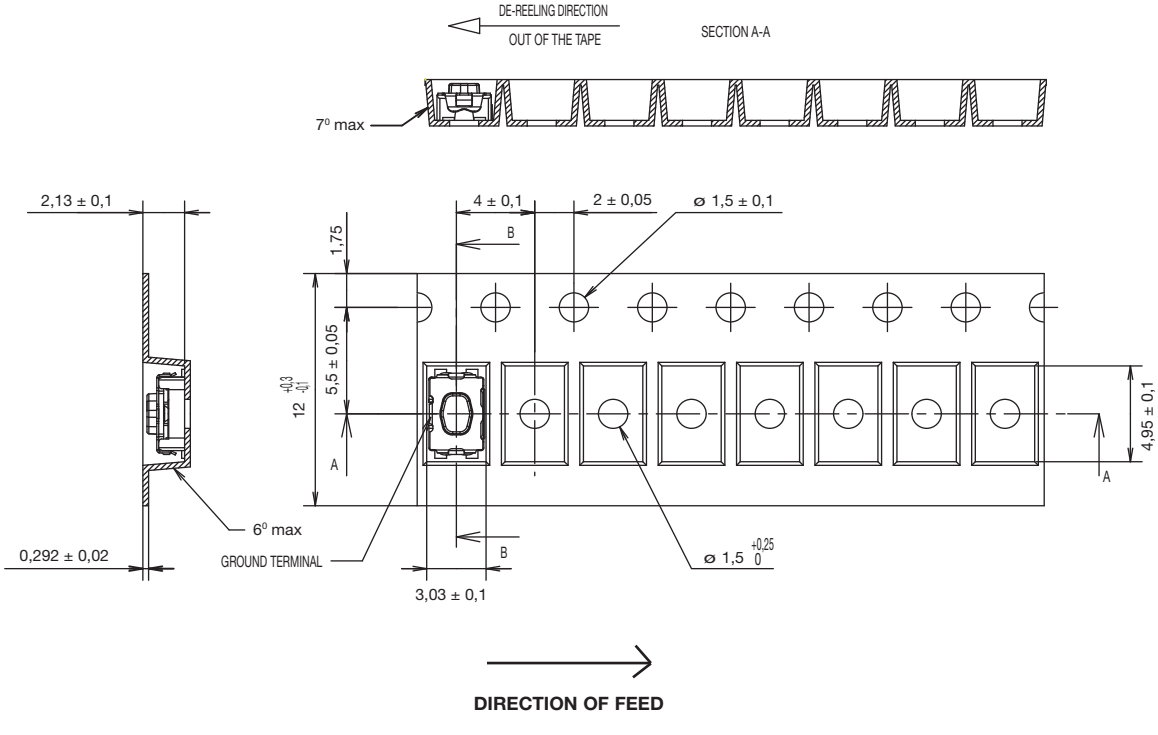

First Angle Projection

Dimensions are shown: mm
Specifications and dimensions subject to change

Features/Benefits

- ***Small footprint***
- ***4 actuation forces***
- ***Excellent tactile feel***
- ***Ultra low current capabilities***
- ***IP40***

Typical Applications

- ***Automotive***
- ***Industrial electronics***
- ***Medical equipment***

Specification

FUNCTION: momentary action
CONTACT ARRANGEMENT: 1 make contact = SPST, N.O.
TERMINALS: Gullwing type for SMT

Mechanical

Type G and NG See description below	Operating force N (grs)	Operating life (cycles)	Travel (mm)
KMR411 LFS	1.2 (120) ± 0.30	100,000	0.20 mm ± 0.1
KMR411 ULC LFS	1.2 (120) ± 0.30	100,000	0.20 mm ± 0.1
KMR413 LFG	1.2 (120) ± 0.30	100,000	0.20 mm ± 0.1
KMR413 ULC LFG	1.2 (120) ± 0.30	100,000	0.20 mm ± 0.1
KMR421 LFS	2.0 (200) ± 0.50	100,000	0.25 mm ± 0.1
KMR421 ULC LFS	2.0 (200) ± 0.50	100,000	0.25 mm ± 0.1
KMR423 LFG	2.0 (200) ± 0.50	100,000	0.25 mm ± 0.1
KMR423 ULC LFG	2.0 (200) ± 0.50	100,000	0.25 mm ± 0.1
KMR431 LFS	3.0 (300) ± 0.75	100,000	0.25 mm ± 0.1
KMR431 ULC LFS	3.0 (300) ± 0.75	100,000	0.25 mm ± 0.1
KMR432 LFS	3.0 (300) ± 0.75	300,000	0.25 mm ± 0.1
KMR432ULC LFS	3.0 (300) ± 0.75	300,000	0.25 mm ± 0.1
KMR433 LFG	3.0 (300) ± 0.75	100,000	0.25 mm ± 0.1
KMR433ULC LFG	3.0 (300) ± 0.75	100,000	0.25 mm ± 0.1
KMR441 LFS	4.0 (400) ± 1.00	100,000	0.30 mm ± 0.1
KMR441 ULC LFS	4.0 (400) ± 1.00	100,000	0.30 mm ± 0.1
KMR442 LFS	4.0 (400) ± 1.00	200,000	0.30 mm ± 0.1
KMR442 ULC LFS	4.0 (400) ± 1.00	200,000	0.30 mm ± 0.1
KMR443 LFG	4.0 (400) ± 1.00	100,000	0.30 mm ± 0.1
KMR443 ULC LFG	4.0 (400) ± 1.00	100,000	0.30 mm ± 0.1

Electrical

	Silver	Gold
MAXIMUM POWER:	1 VA	0.2 VA
MAXIMUM VOLTAGE:	32 VDC	32 VDC
MINIMUM VOLTAGE:	20 mVDC	20 mVDC
MAXIMUM CURRENT:	50 mA	10 mA
MINIMUM CURRENT:	1 mA*	1 mA*
DIELECTRIC STRENGTH:	≥ 250 Vrms	
CONTACT RESISTANCE:	≤ 100 mΩ	
INSULATION RESISTANCE:	≥ 1GΩ	
BOUNCE TIME:	≤ 3 ms	

*For ULC version minimum current is 1µA at 1.8 VDC

Environmental

	Silver	Gold
OPERATING TEMPERATURE:	-40˚C to 85˚C	-40˚C to 125˚C
STORAGE TEMPERATURE:	-55˚C to 85˚C	-55˚C to 125˚C

Process

Infrared Reflow Soldering in accordance with IEC61760-1

Packaging

In reels of 6,000 pieces
External diameter 330 mm ± 2 mm

NOTE: Specifications listed above are for switches with standard options.
For information on specific and custom switches, consult Customer Service Center.

TACTILE FEELING: KMR 4 series with actuation force in 2N - 3N - 4N: ≥ 25%
KMR 4 series with actuation force in 1.2N: ≥ 20%

Part Number Description

For any part number different from those listed above, please consult your local representative.

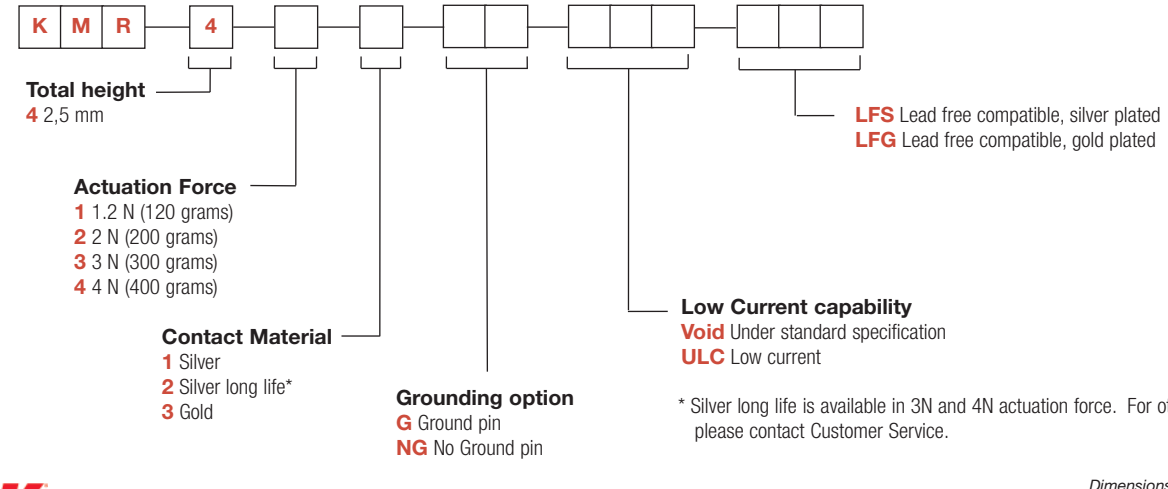

* Silver long life is available in 3N and 4N actuation force. For other versions, please contact Customer Service.

Dimensions are shown: mm
Specifications and dimensions subject to change

KMR 4 Series - 2.5 mm height

PCB layout shown with ground pin option

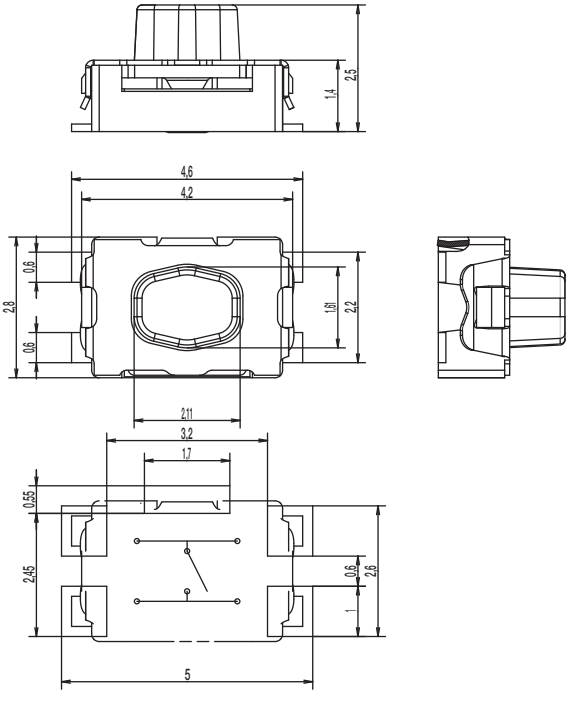

TAPE & REEL

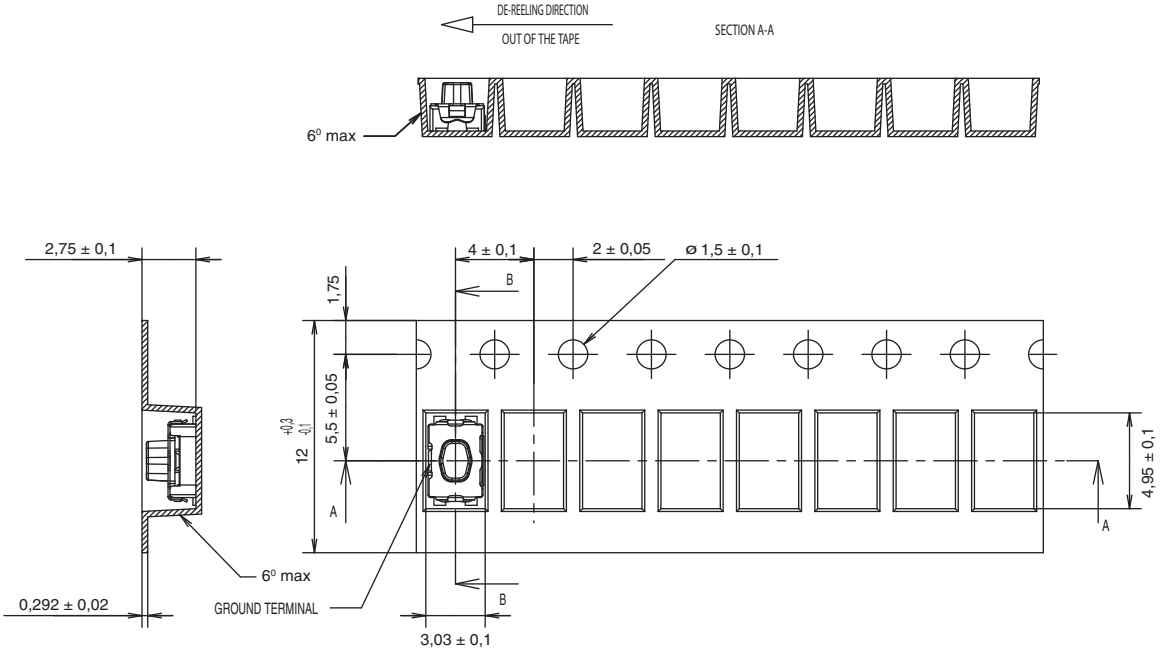

First Angle Projection

Dimensions are shown: mm
Specifications and dimensions subject to change

Features/Benefits

- *Watertight IP67*
- *Standard and long life versions*
- *No ground pin*
- *Ultra low current capabilities*
- *Excellent tactile feel*

Typical Applications

- *Automotive*
- *Medical*
- *Consumer*
- *Industrial*

Specification

FUNCTION: momentary action
CONTACT ARRANGEMENT: 1 make contact = SPST, N.O.
TERMINALS: Gullwing type for SMT

Mechanical

Type NG See description below	Operating force N (grs)	Operating life (cycles)	Travel (mm)
KMR611NG LFS	1.2 (120) ± 0.30	200,000	0.20 mm ± 0.1
KMR611NG ULC LFS	1.2 (120) ± 0.30	200,000	0.20 mm ± 0.1
KMR613NG LFG	1.2 (120) ± 0.30	200,000	0.20 mm ± 0.1
KMR613NG ULC LFG	1.2 (120) ± 0.30	200,000	0.20 mm ± 0.1
KMR621NG LFS	2.0 (200) ± 0.50	200,000	0.25 mm ± 0.1
KMR621NG ULC LFS	2.0 (200) ± 0.50	200,000	0.25 mm ± 0.1
KMR623NG LFG	2.0 (200) ± 0.50	200,000	0.25 mm ± 0.1
KMR623NG ULC LFG	2.0 (200) ± 0.50	200,000	0.25 mm ± 0.1
KMR631NG LFS	3.0 (300) ± 0.75	150,000	0.25 mm ± 0.1
KMR631NG ULC LFS	3.0 (300) ± 0.75	150,000	0.25 mm ± 0.1
KMR632NG LFS	3.0 (300) ± 0.75	300,000	0.25 mm ± 0.1
KMR632NG ULC LFS	3.0 (300) ± 0.75	300,000	0.25 mm ± 0.1
KMR633NG LFG	3.0 (300) ± 0.75	150,000	0.25 mm ± 0.1
KMR633NG ULC LFG	3.0 (300) ± 0.75	150,000	0.25 mm ± 0.1
KMR641NG LFS	4.0 (400) ± 1.00	100,000	0.30 mm ± 0.1
KMR641NG ULC LFS	4.0 (400) ± 1.00	100,000	0.30 mm ± 0.1
KMR642NG LFS	4.0 (400) ± 1.00	200,000	0.30 mm ± 0.1
KMR642NG ULC LFS	4.0 (400) ± 1.00	200,000	0.30 mm ± 0.1
KMR643NG LFG	4.0 (400) ± 1.00	100,000	0.30 mm ± 0.1
KMR643NG ULC LFG	4.0 (400) ± 1.00	100,000	0.30 mm ± 0.1

TACTILE FEELING: KMR 6 series with actuation force in 2N - 3N - 4N: ≥ 30%
KMR 6 series with actuation force in 1.2N: ≥ 20%

Electrical

	Silver	Gold
MAXIMUM POWER:	1 VA	0.2 VA
MAXIMUM VOLTAGE:	32 VDC	32 VDC
MINIMUM VOLTAGE:	20 mVDC	20 mVDC
MAXIMUM CURRENT:	50 mA	10 mA
MINIMUM CURRENT:	1 mA*	1 mA*
DIELECTRIC STRENGTH:	≥ 250 Vrms	
CONTACT RESISTANCE:	≤ 100 mΩ	
INSULATION RESISTANCE:	≥ 1GΩ	
BOUNCE TIME:	≤ 3 ms	

*For ULC version minimum current is 1µA at 1.8 VDC

Environmental

	Silver	Gold
OPERATING TEMPERATURE:	-40˚C to 85˚C	-40˚C to 125˚C
STORAGE TEMPERATURE:	-55˚C to 85˚C	-55˚C to 125˚C

Process

Infrared Reflow Soldering in accordance with IEC61760-1

Packaging

In reels of 7,000 pieces
External diameter 330 mm ± 2 mm

NOTE: Specifications listed above are for switches with standard options.
For information on specific and custom switches, consult Customer Service Center.

Part Number Description

For any part number different from those listed above, please consult your local representative.

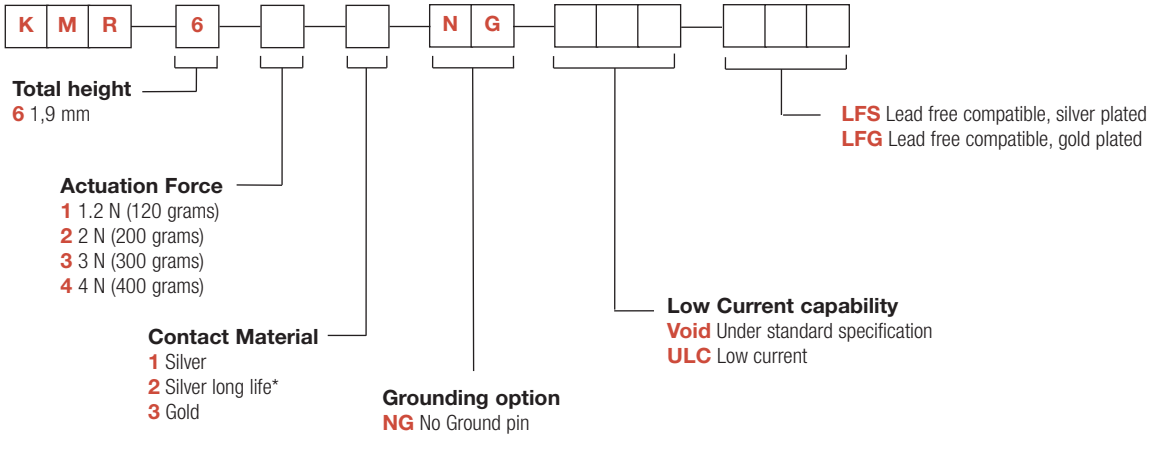

* Silver long life is available in 3N and 4N actuation force. For other versions, please contact Customer Service.

KMR 6 Series
Microminiature SMT Top Actuated IP67

KMR 6 Series - 1.9 mm height

PCB layout shown with ground pin option

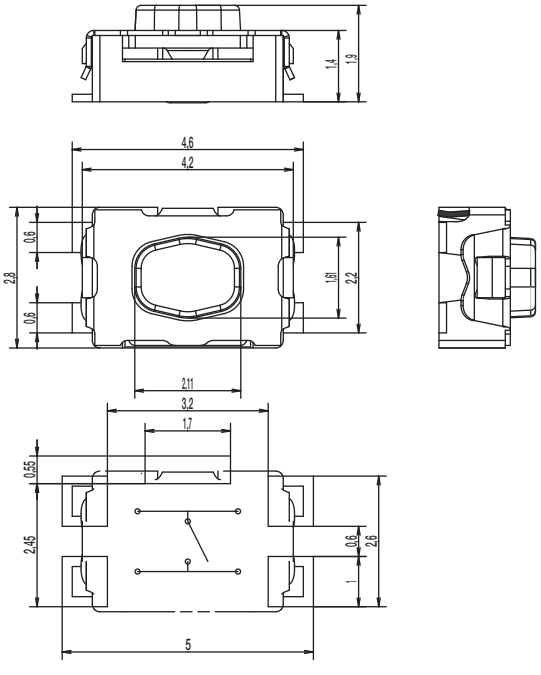

TAPE & REEL

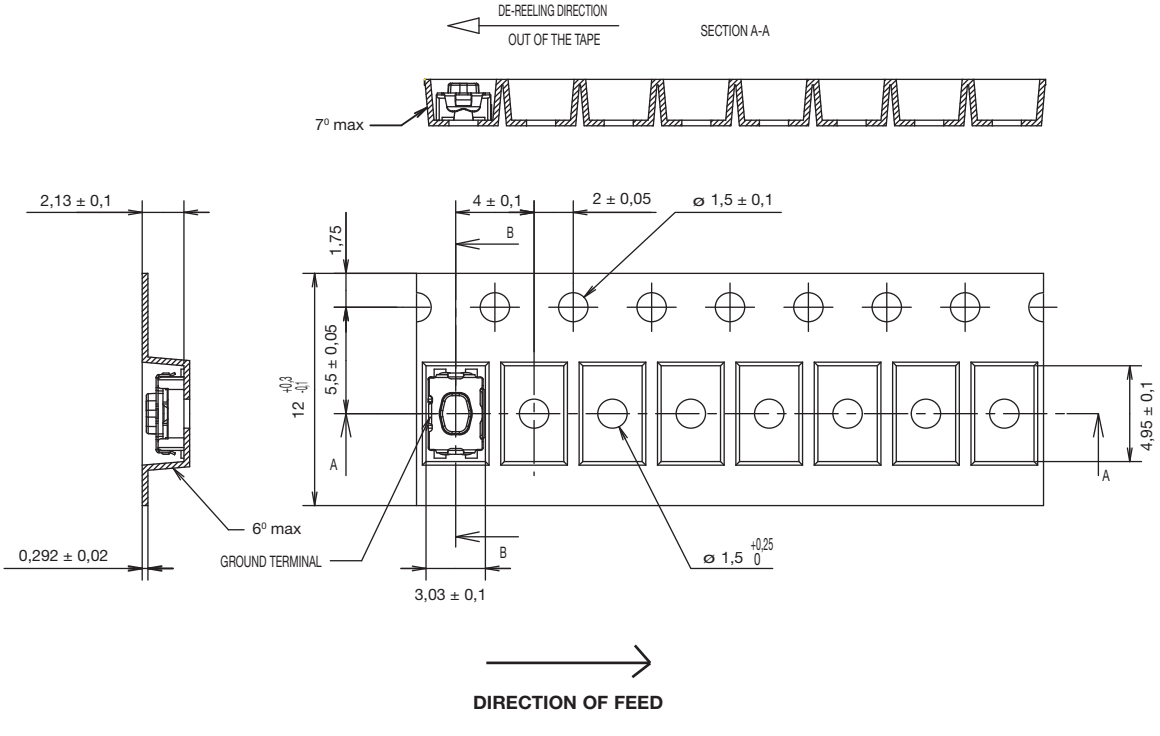

Features/Benefits

- *Watertight IP67*
- *Standard and long life versions*
- *No ground pin*
- *Ultra low current capabilities*
- *Excellent tactile feel*

Typical Applications

- *Automotive*
- *Medical*
- *Consumer*
- *Industrial*

Specification

FUNCTION: momentary action
CONTACT ARRANGEMENT: 1 make contact = SPST, N.O.
TERMINALS: Gullwing type for SMT

Mechanical

Type NG See description below	Operating force N (grs)	Operating life (cycles)	Travel (mm)
KMR711NG LFS	1.2 (120) ± 0.30	100,000	0.20 mm ± 0.1
KMR711NG ULC LFS	1.2 (120) ± 0.30	100,000	0.20 mm ± 0.1
KMR713NG LFG	1.2 (120) ± 0.30	100,000	0.20 mm ± 0.1
KMR713NG ULC LFG	1.2 (120) ± 0.30	100,000	0.20 mm ± 0.1
KMR721NG LFS	2.0 (200) ± 0.50	100,000	0.25 mm ± 0.1
KMR721NG ULC LFS	2.0 (200) ± 0.50	100,000	0.25 mm ± 0.1
KMR723NG LFG	2.0 (200) ± 0.50	100,000	0.25 mm ± 0.1
KMR723NG ULC LFG	2.0 (200) ± 0.50	100,000	0.25 mm ± 0.1
KMR731NG LFS	3.0 (300) ± 0.75	100,000	0.25 mm ± 0.1
KMR731NG ULC LFS	3.0 (300) ± 0.75	100,000	0.25 mm ± 0.1
KMR732NG LFS	3.0 (300) ± 0.75	300,000	0.25 mm ± 0.1
KMR732NG ULC LFS	3.0 (300) ± 0.75	300,000	0.25 mm ± 0.1
KMR733NG LFG	3.0 (300) ± 0.75	100,000	0.25 mm ± 0.1
KMR733NG ULC LFG	3.0 (300) ± 0.75	100,000	0.25 mm ± 0.1
KMR741NG LFS	4.0 (400) ± 1.00	100,000	0.30 mm ± 0.1
KMR741NG ULC LFS	4.0 (400) ± 1.00	100,000	0.30 mm ± 0.1
KMR742NG LFS	4.0 (400) ± 1.00	200,000	0.30 mm ± 0.1
KMR742NG ULC LFS	4.0 (400) ± 1.00	200,000	0.30 mm ± 0.1
KMR743NG LFG	4.0 (400) ± 1.00	100,000	0.30 mm ± 0.1
KMR743NG ULC LFG	4.0 (400) ± 1.00	100,000	0.30 mm ± 0.1

Electrical

	Silver	Gold
MAXIMUM POWER:	1 VA	0.2 VA
MAXIMUM VOLTAGE:	32 VDC	32 VDC
MINIMUM VOLTAGE:	20 mVDC	20 mVDC
MAXIMUM CURRENT:	50 mA	10 mA
MINIMUM CURRENT:	1 mA*	1 mA*
DIELECTRIC STRENGTH:	≥ 250 Vrms	
CONTACT RESISTANCE:	≤ 100 mΩ	
INSULATION RESISTANCE:	≥ 1GΩ	
BOUNCE TIME:	≤ 3 ms	

*For ULC version minimum current is 1µA at 1.8 VDC

Environmental

	Silver	Gold
OPERATING TEMPERATURE:	-40°C to 85°C	-40°C to 125°C
STORAGE TEMPERATURE:	-55°C to 85°C	-55°C to 125°C

Process

Infrared Reflow Soldering in accordance with IEC61760-1

Packaging

In reels of 6,000 pieces
External diameter 330 mm ± 2 mm

NOTE: Specifications listed above are for switches with standard options.
For information on specific and custom switches, consult Customer Service Center.

TACTILE FEELING: KMR 7 series with actuation force in 2N - 3N - 4N: ≥ 25%
KMR 7 series with actuation force in 1.2N: ≥ 20%

Part Number Description

For any part number different from those listed above, please consult your local representative.

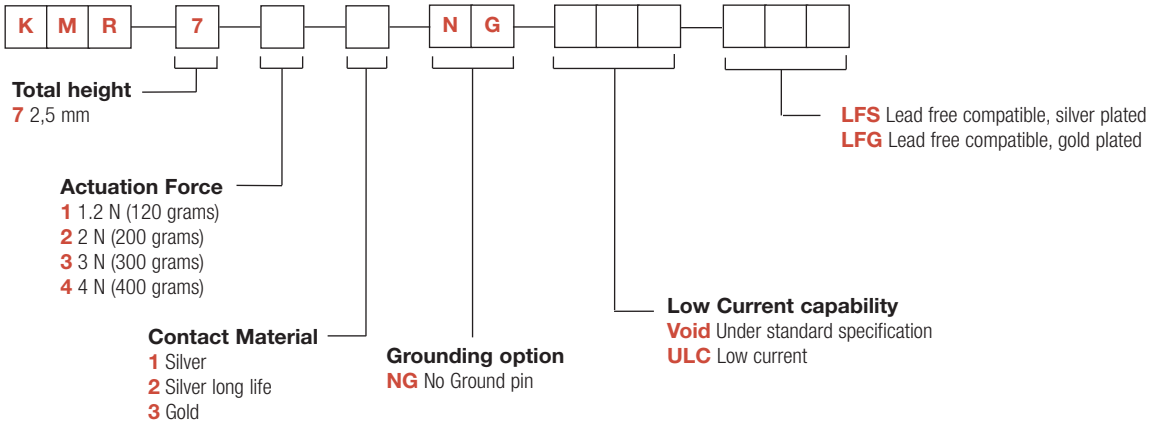

* Silver long life is available in 3N and 4N actuation force. For other versions, please contact Customer Service.

Dimensions are shown: mm
Specifications and dimensions subject to change

KMR 7 Series - 2.5 mm height

PCB layout shown with ground pin option

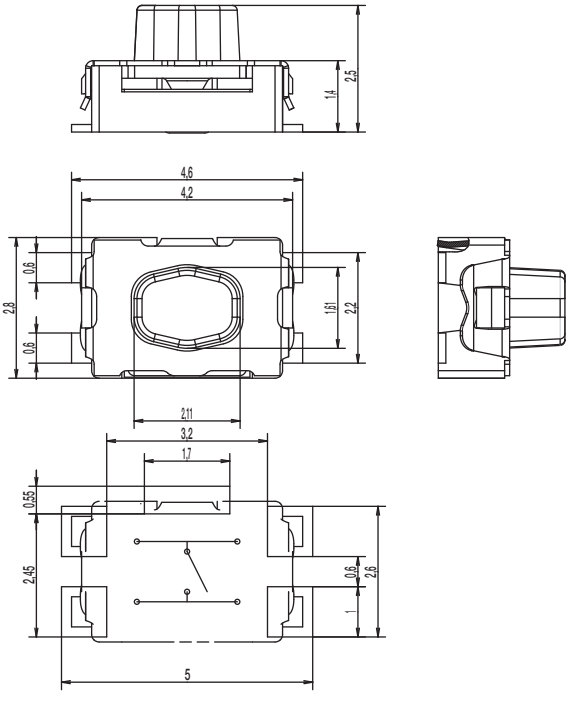

TAPE & REEL

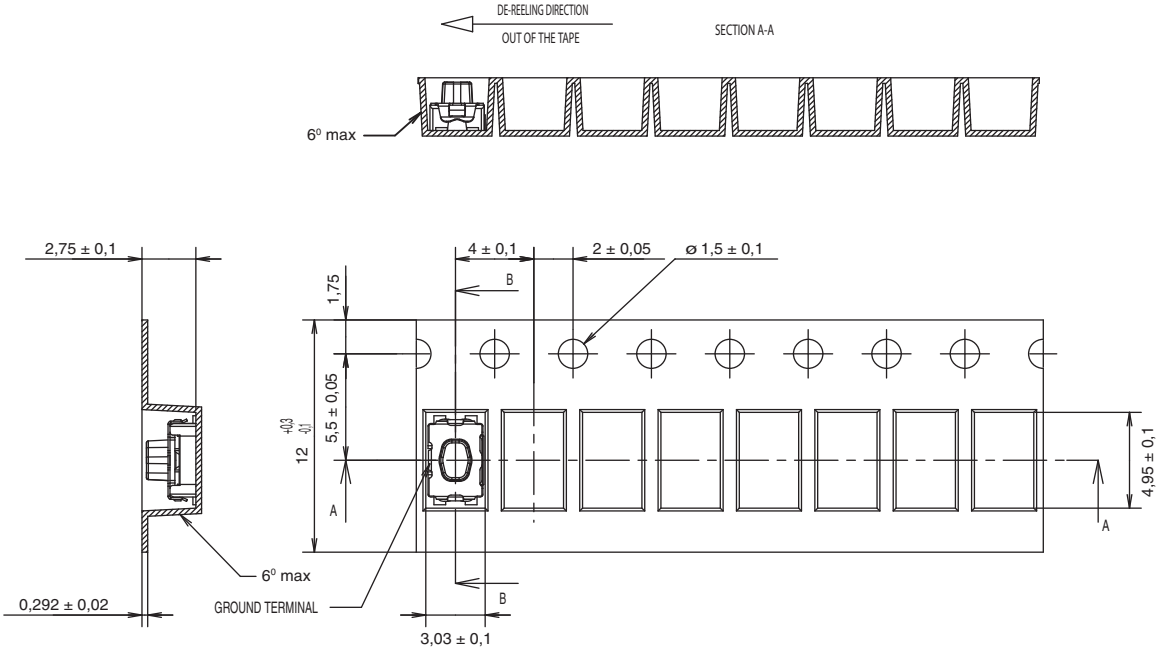

Features/Benefits

- *Small footprint*
- *3 actuation forces*
- *Excellent tactile feel*
- *Hard actuator*
- *IP40*

Typical Applications

- *Automotive*
- *Mobile phones*
- *Industrial electronics*
- *Medical equipment*

Specification

FUNCTION: momentary action
CONTACT ARRANGEMENT: 1 make contact = SPST, N.O.
TERMINALS: Gullwing type for SMT

Mechanical

Type G and NG See description below	Operating force N (grs)	Operating life (cycles)	Travel (mm)
KMR811G LFS	1.2 (120) ± 0.30	200,000	0.20 mm ± 0.1
KMR821G LFS	2.0 (200) ± 0.50	200,000	0.25 mm ± 0.1
KMR831G LFS	3.0 (300) ± 0.75	150,000	0.25 mm ± 0.1
KMR831NG ULC LFS	3.0 (300) ± 0.75	150,000	0.25 mm ± 0.1

TACTILE FEELING:

KMR 8 series with actuation force in 2N - 3N - 4N: ≥ 30%
KMR 8 series with actuation force in 1.2N: ≥ 20%

Electrical

	Silver
MAXIMUM POWER:	1 VA
MAXIMUM VOLTAGE:	32 VDC
MINIMUM VOLTAGE:	20 mVDC
MAXIMUM CURRENT:	50 mA
MINIMUM CURRENT:	1 mA*
DIELECTRIC STRENGTH:	≥ 250 Vrms
CONTACT RESISTANCE:	≤ 100 mΩ
INSULATION RESISTANCE:	≥ 1GΩ
BOUNCE TIME:	≤ 3 ms

*For ULC version minimum current is 1µA at 1.8 VDC

Environmental

	Silver
OPERATING TEMPERATURE:	-40˚C to 85˚C
STORAGE TEMPERATURE:	-55˚C to 85˚C

Process

Infrared Reflow Soldering in accordance with IEC61760-1

Packaging

In reels of 7,000 pieces
External diameter 330 mm ± 2 mm

NOTE: Specifications listed above are for switches with standard options.
For information on specific and custom switches, consult Customer Service Center.

Part Number Description

For any part number different from those listed above, please consult your local representative.

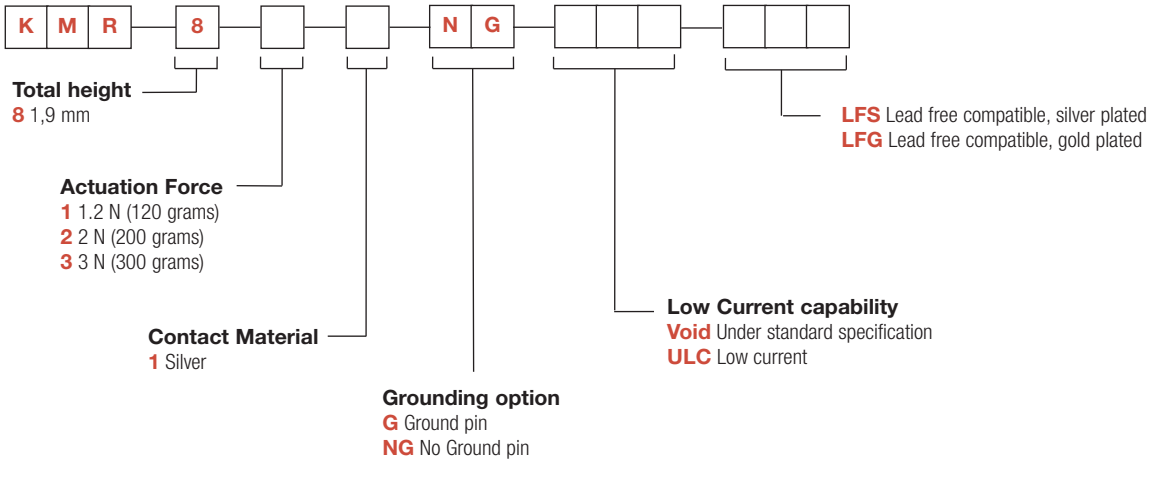

KMR 8 Series
Microminiature SMT Top Actuated

G - Ground Pin

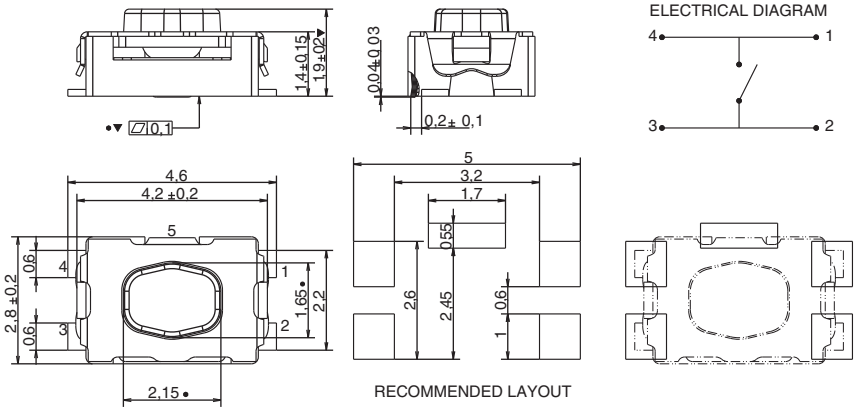

NG - No Ground Pin

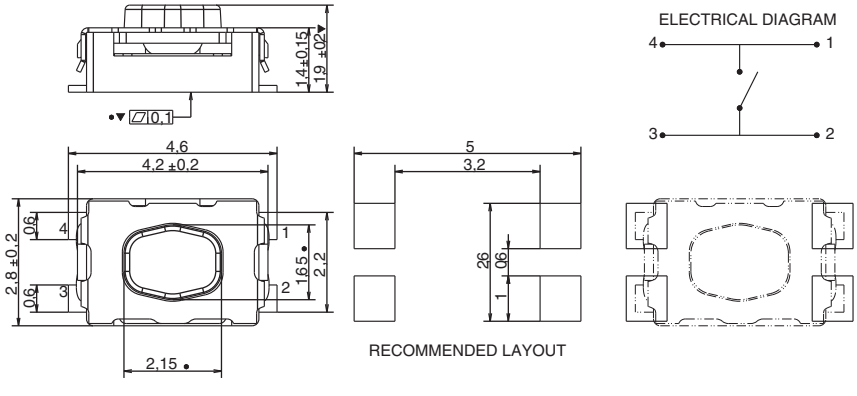

TAPE & REEL

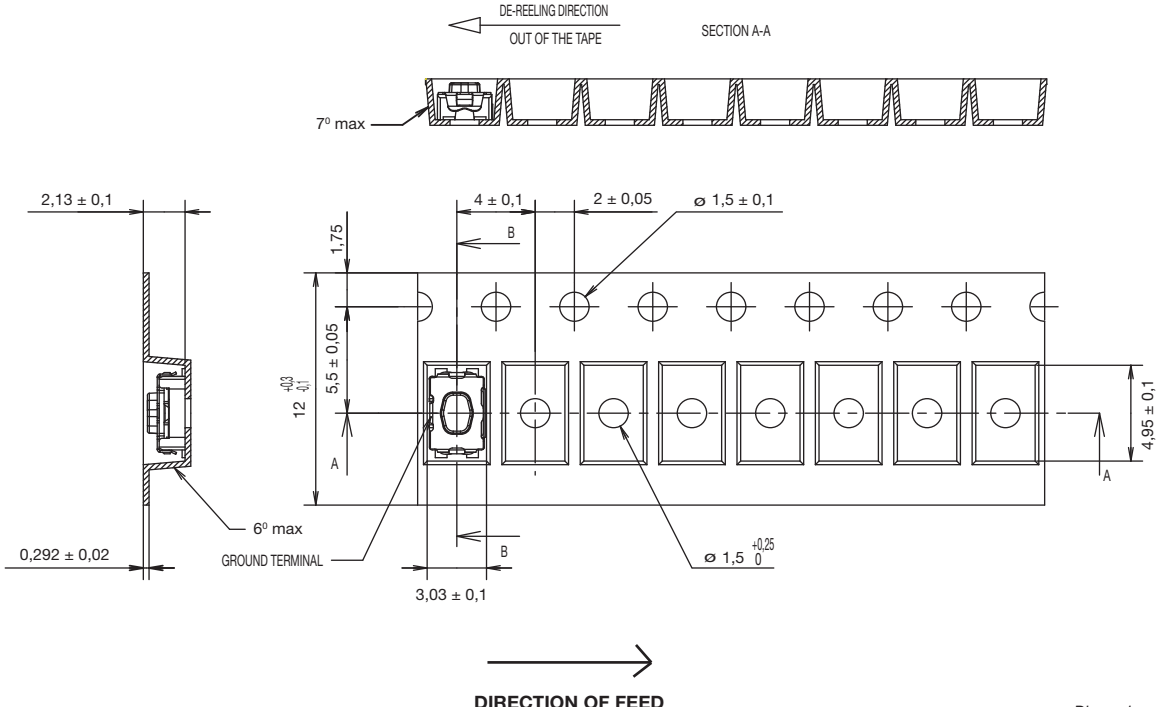

Dimensions are shown: mm
Specifications and dimensions subject to change

Features/Benefits

- *Compact size*
- *Excellent tactile feel*
- *ESD protection*
- *Positioning pegs for stability*
- *RoHS compliant and compatible*

Typical Applications

- *Mobile phones*
- *Medical handheld monitors*
- *Consumer electronics*
- *Telecommunication networks*

Specification

FUNCTION: Momentary
CONTACT ARRANGEMENT: SPST, N.O.
TERMINALS: Gullwing type for SMT
IP40 Sealed

Mechanical

OVERLOAD: 20N
TACTILE FEELING: 15% min. for the 2N version
25% min for the 2.5N version

Type	Operating force Newtons (grams)	Operating life (operations)	Travel
KMS221G/GP	2N (200) ± 0.5	100 K cycles	0,25 ± 0,15
KMS223G/GP	2N (200) ± 0.5	100 K cycles	0,25 ± 0,15
KMS231G/GP	3N (300) ± 0.6	100 K cycles	0,3 ± 0,15
KMS233G/GP	3N (300) ± 0.6	100 K cycles	0,3 ± 0,15

Note: Specifications listed above are for switches with standard options. For information on specific and custom switches, consult Customer Service Center.

Packaging

Tape and reels in reels of 3,000 pieces.
External diameter 330mm ± 2mm.

Electrical

	Silver	Gold
MAXIMUM POWER:	1 VA	0.2 VA
MAXIMUM VOLTAGE:	32 VDC	32 VDC
MAXIMUM CURRENT DC:	50 mA	10 mA
MINIMUM CURRENT DC:	1 mA	1 mA

DIELECTRIC STRENGTH: 250 VDC
CONTACT RESISTANCE: ≤100 mΩ
INSULATION RESISTANCE: 10^9 Ω
BOUNCE TIME: ≤ 3 ms

Environmental

	Silver	Gold
OPERATING TEMPERATURE:	-40˚C to 85˚C	-40˚C to 125˚C
STORAGE TEMPERATURE:	-55˚C to 85˚C	-55˚C to 125˚C

Process

Infared reflow soldering in accordance with IEC 61760-1

How To Order

Our easy build-a-switch concept allows you to mix and match options to create the switch you need. To order, select desired option from each category and place it in the appropriate box.

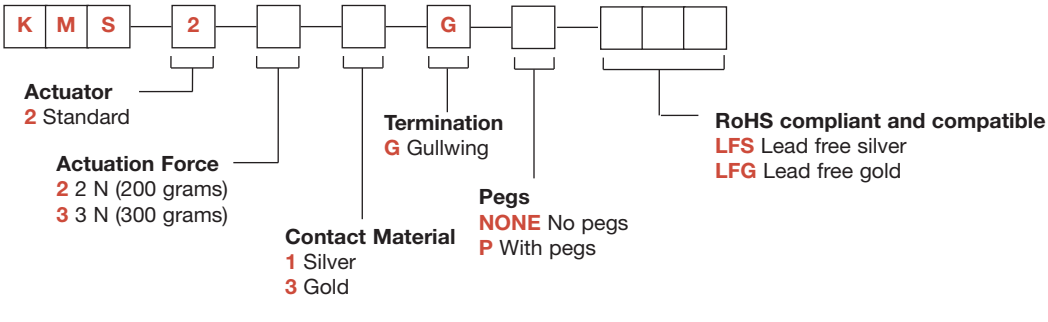

KMS Series
Microminiature SMT Side Actuated

KMS

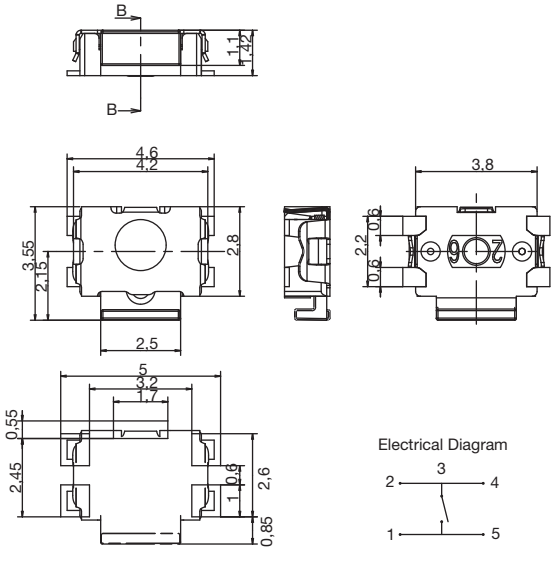

KMS WITH PEGS

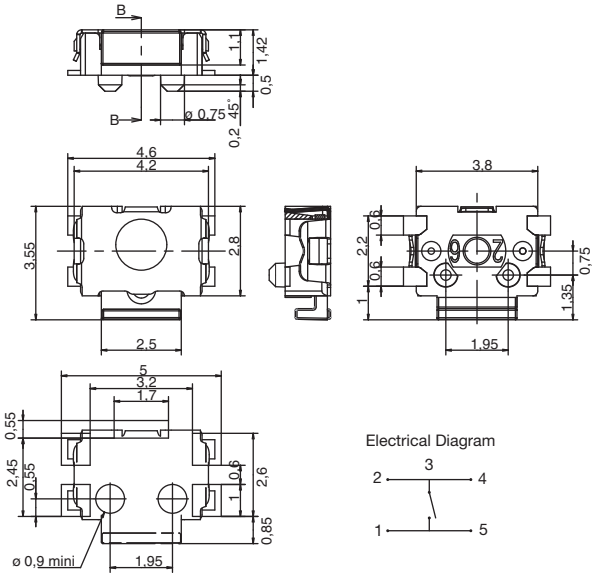

TAPE & REEL

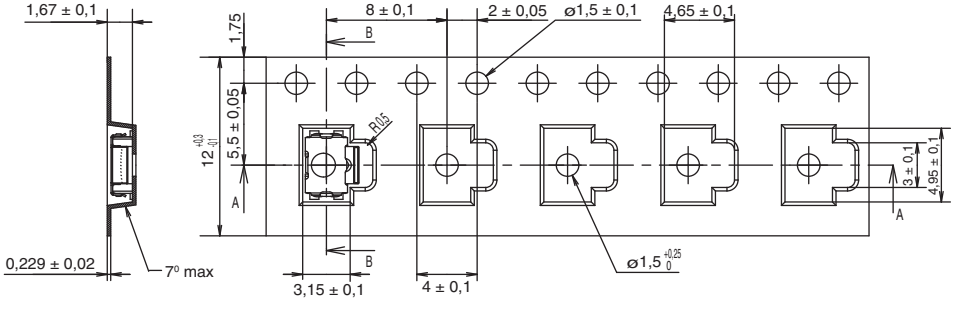

WITH PEGS

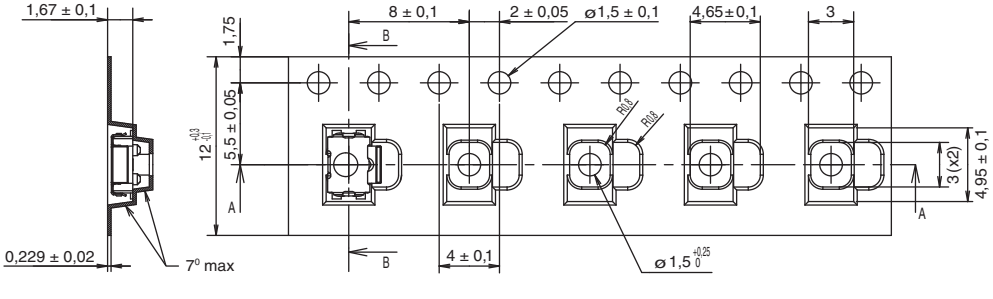

DIRECTION OF FEED

First Angle Projection

Dimensions are shown: mm
Specifications and dimensions subject to change

PTS 525 Series
Microminiature Tact Switch for SMT

Features/Benefits

- ***0.8 & 1.5 mm actuator height***
- ***Ruggedized package in a compact size***
- ***High number of cycles***

Typical Applications

- ***Consumer products***
- ***Instrumentation***
- ***Remote controls***

Specification

FUNCTION: Momentary action
CONTACT ARRANGEMENT: 1 make contact = SPST, N.O.

Electrical

MAXIMUM VOLTAGE:	15 VDC
MAXIMUM CURRENT DC:	20 mA
DIELECTRIC STRENGTH:	250 VA C (1mn)
CONTACT RESISTANCE:	≤ 100 mΩ
INSULATION RESISTANCE:	≥ 100 MΩ
BOUNCE TIME:	≤ 10 ms

Environmental

OPERATING TEMPERATURE: -20˚C to 70˚C

Process

SOLDERING: This component is suited to the following methods:
Infrared Reflow Soldering in accordance with IEC61760-1

Packaging

Switches in reels of:
5,000 pieces in 0.8 mm height
4,000 pieces in 1.5 mm height
Dimensions of reels according to EIA 481B
External diameter 330 mm

NOTE: Specifications listed above are for switches with standard options.
For information on specific and custom switches, consult Customer Service Center.

How To Order

Please see chart below for full part numbers.

Part Number	Height (mm)	Leads Shape	Ground Pin	Force	Travel (mm)	Operating Life
PTS525 SM08 SMTR 2 LFS	0.8	G	No	160 gf ± 50 gf	0.25 ± 0.2	1,000,000
PTS525 SK08 SMTR 2 LFS	0.8	G	No	260 gf ± 50 gf	0.25 ± 0.2	200,000
PTS525 SM15 SMTR 2 LFS	1.5	G	No	160 gf ± 50 gf	0.25 ± 0.2	1,000,000
PTS525 SK15 SMTR 2 LFS	1.5	G	No	260 gf ± 50 gf	0.25 ± 0.2	500,000
PTS525 SMG15 SMTR 2 LFS	1.5	G	Yes	160 gf ± 50 gf	0.25 ± 0.2	1,000,000
PTS525 SKG15 SMTR 2 LFS	1.5	G	Yes	260 gf ± 50 gf	0.25 ± 0.2	500,000
PTS525 SMG15J SMTR 2 LFS	1.5	J	Yes	160 gf ± 50 gf	0.25 ± 0.2	1,000,000
PTS525 SKG15J SMTR 2 LFS	1.5	J	Yes	260 gf ± 50 gf	0.25 ± 0.2	500,000

First Angle Projection

Dimensions are shown: mm
Specifications and dimensions subject to change

PTS 525 Series
Microminiature Tact Switch for SMT

PTS525 SM08 SMTR2 LFS
PTS525 SK08 SMTR2 LFS

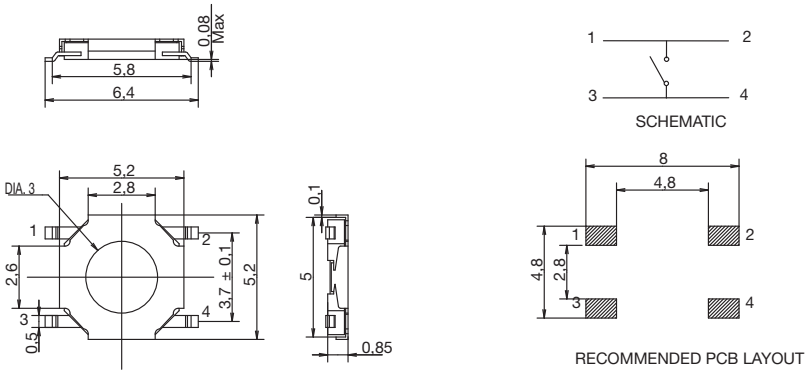

PTS525 SM15 SMTR2 LFS
PTS525 SK15 SMTR2 LFS

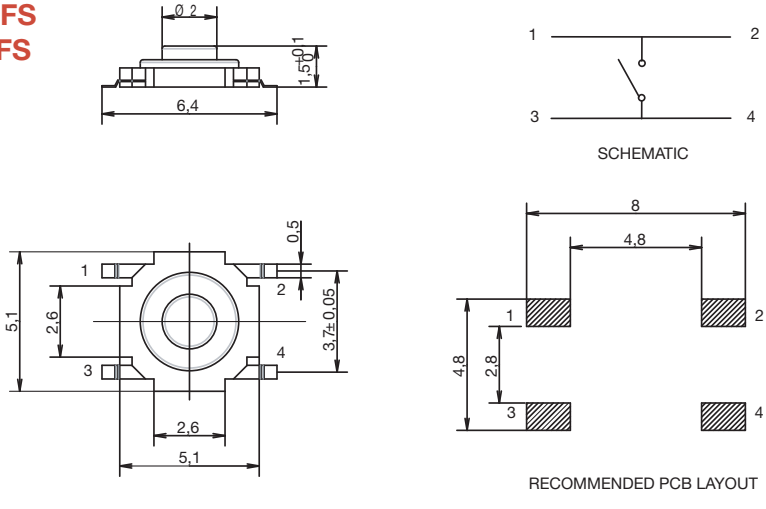

PTS525 SMG15 SMTR2 LFS
PTS525 SKG15 SMTR2 LFS

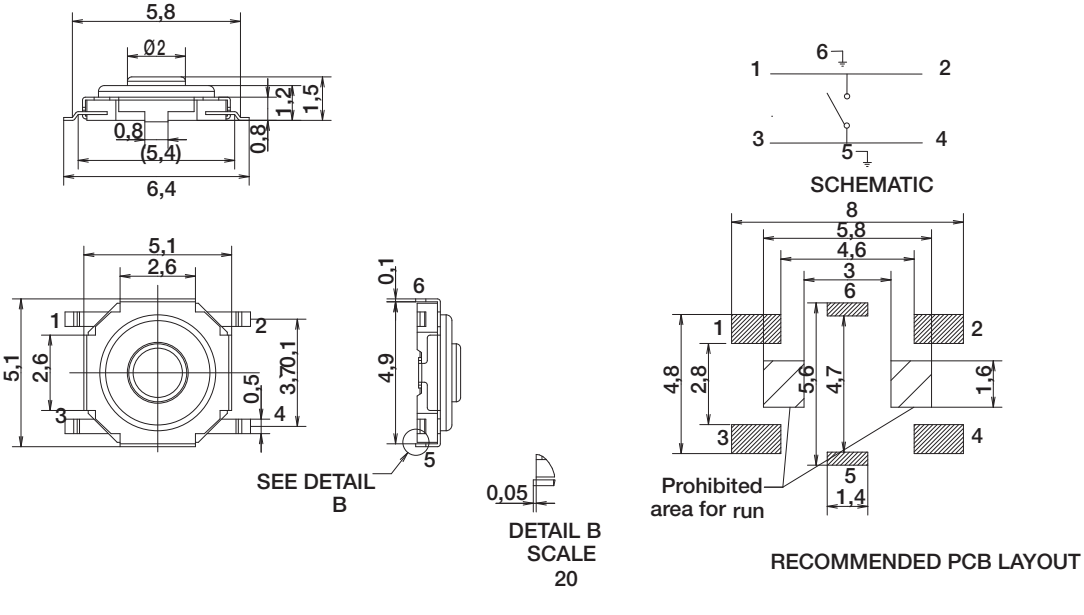

Dimensions are shown: mm
Specifications and dimensions subject to change

PTS525 SMG15J SMTR2 LFS
PTS525 SKG15J SMTR2 LFS

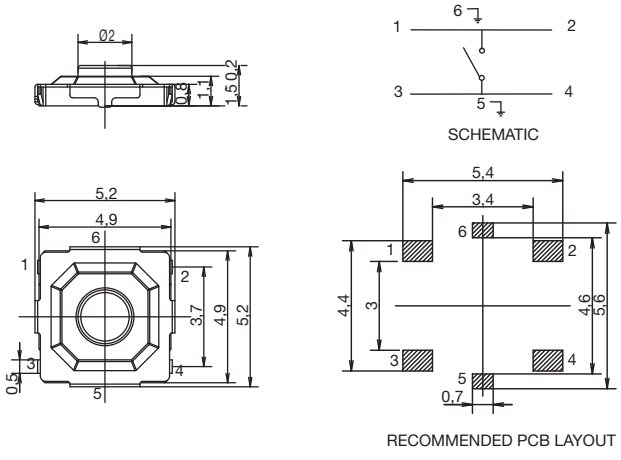

TAPE & REEL

0.8 mm height
5,000 pieces per reel

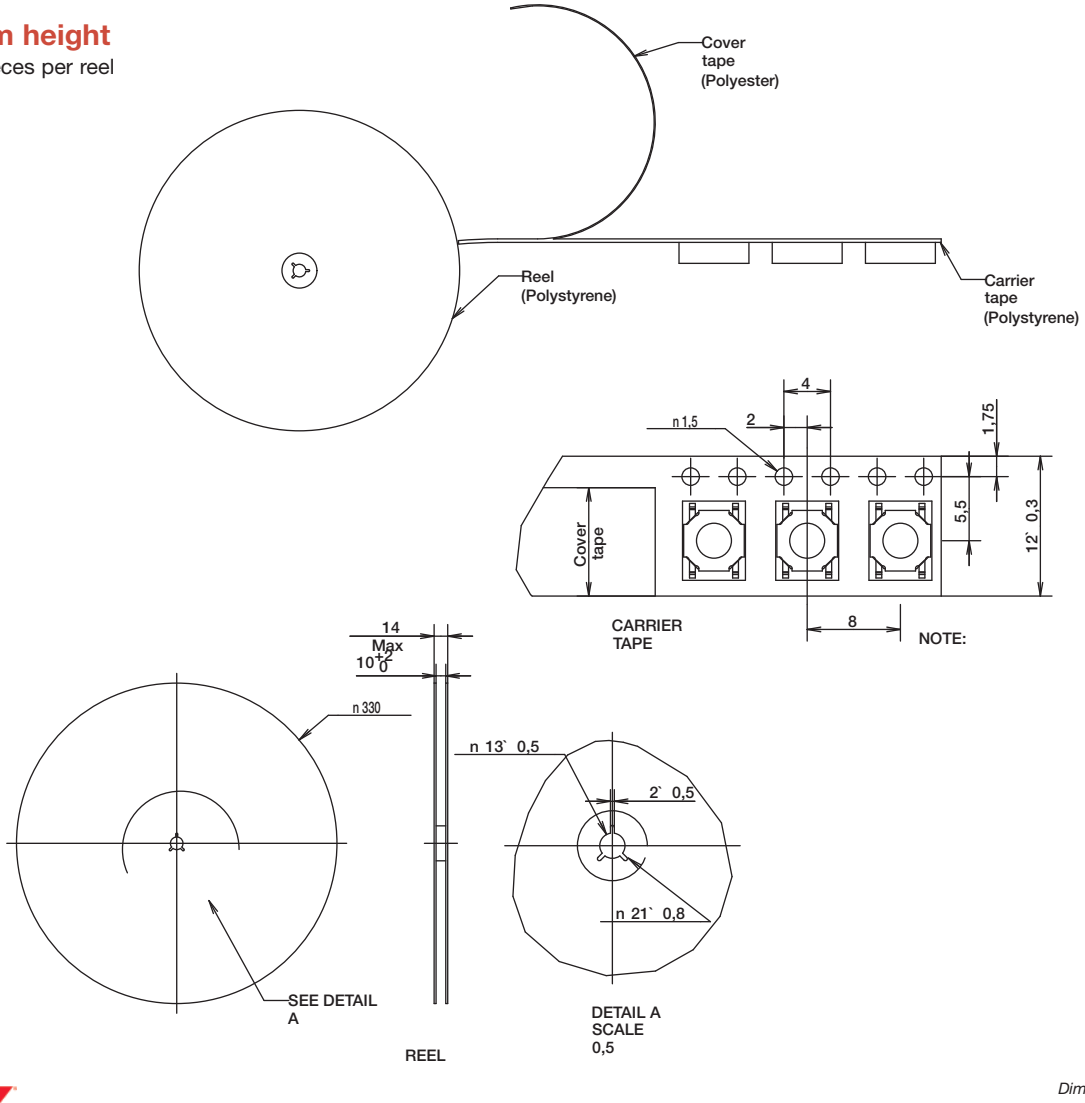

TAPE & REEL

1.5 mm height

4,000 pieces per reel

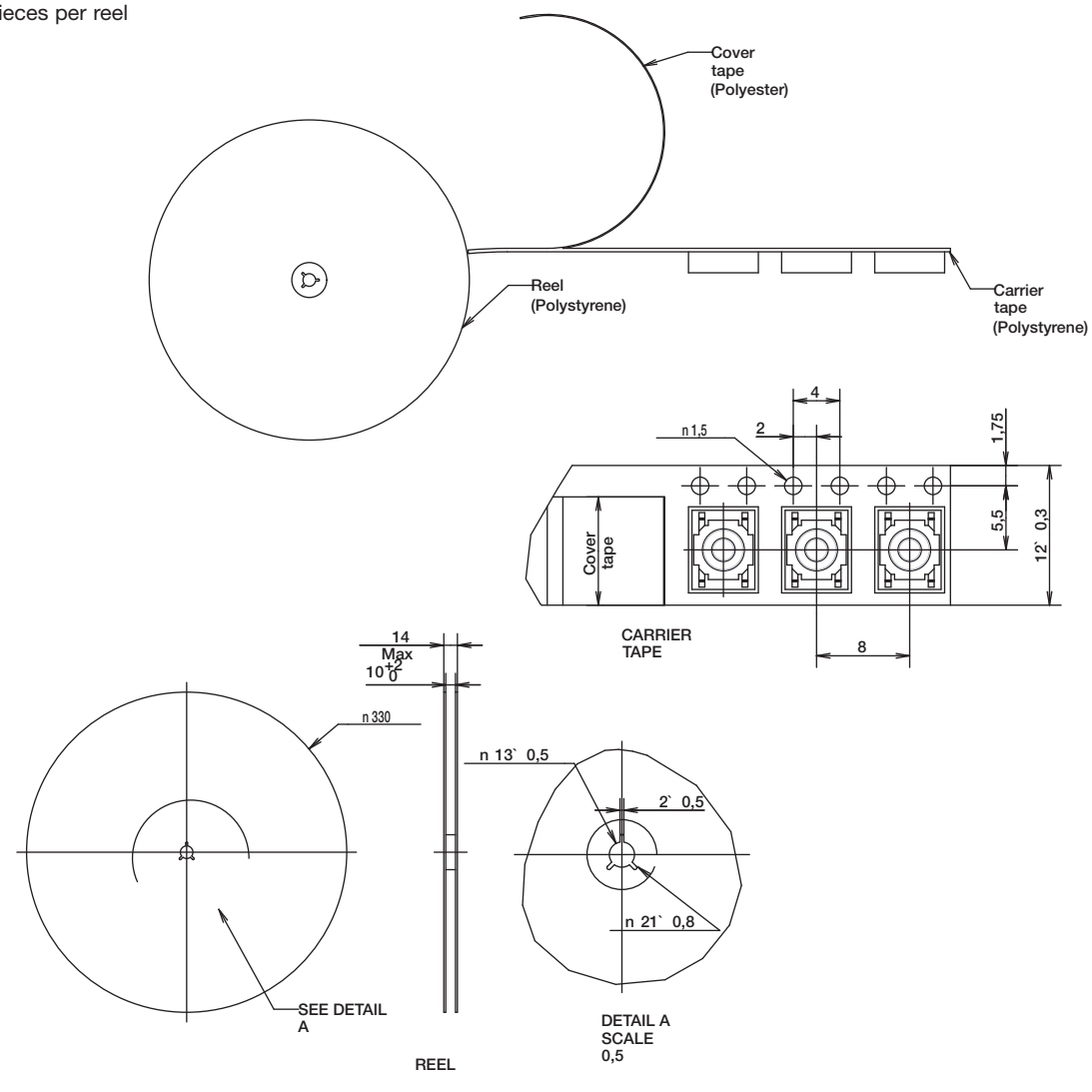

First Angle Projection

Dimensions are shown: mm
Specifications and dimensions subject to change

PTS 530 Series
Ultra Low Profile SMT Top Actuated

Features/Benefits

- ***4.5 x 4.5 mm footprint***
- ***0.55 mm thickness***
- ***High number of cycles***
- ***Symbol line identification***

Typical Applications

- ***MP3 accessories***
- ***Bluetooth headset***
- ***Remote controls***
- ***Garage door opener***

Specifications

FUNCTION: momentary action
CONTACT ARRANGEMENT: 1 make contact = SPST N.O.
TERMINALS: Gullwing for SMT
TRAVEL: 0.2mm - 0.1 /+ 0.15mm

Part Number	Operating Force (gf)	Operating Life (operations)
PTS530 GN055 SMTR LFS	100 ± 30	1,000,000
PTS530 GM055 SMTR LFS	160 ± 30	1,000,000
PTS530 GH055 SMTR LFS	200 ± 30	200,000
PTS530 GK055 SMTR LFS	260 ± 30	200,000
PTS530 GG065 SMTR LFS	400 ± 70	300,000
PTS530 GS065 SMTR LFS	600 - 50/+100	150,000

Electrical

MAXIMUM VOLTAGE: 12 VDC
MAXIMUM CURRENT DC: 50 mA
DIELECTRIC STRENGTH: 250 VA C (1mn)
CONTACT RESISTANCE: ≤ 100 mΩ
INSULATION RESISTANCE: ≥ 100 MΩ
BOUNCE TIME: ≤ 10 ms

Environmental

OPERATING TEMPERATURE: -40˚C to 85˚C

Process

SOLDERING: This component is suited to the following methods:
Infrared Reflow Soldering in accordance with IEC61760-1

Packaging

Switches in reels of 7,000 pieces.
Dimensions of reels according to EIA 481B
External diameter 330 mm

NOTE: Specifications listed above are for switches with standard options.
For information on specific and custom switches, consult Customer Service Center.

How To Order

Our easy build-a-switch concept allows you to mix and match options to create the switch you need. To order, select desired option from each category and place it in the appropriate box.

For any part number different from those listed above, please consult your local representative.

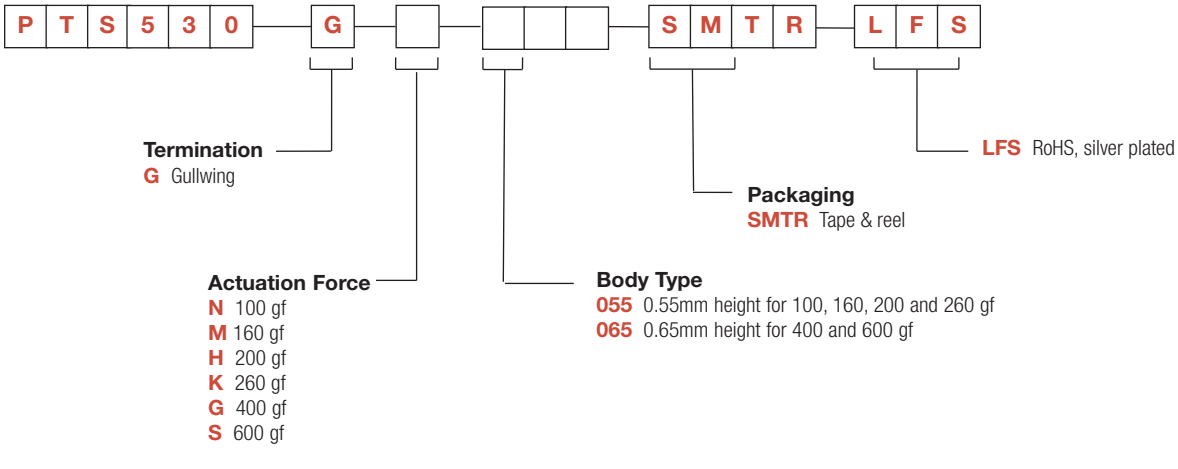

PTS 530 Series
Ultra Low Profile SMT Top Actuated

TERMINATION

G GULLWING

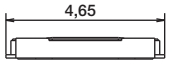

BODY TYPE / ACTUATION FORCE

055 0,55 MM HEIGHT

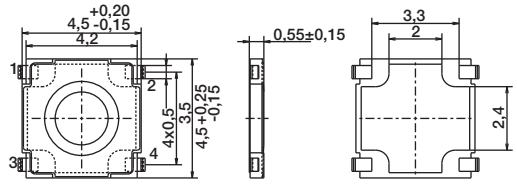

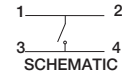

SCHEMATIC

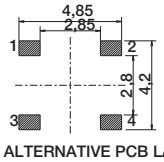

ALTERNATIVE PCB LAYOUT

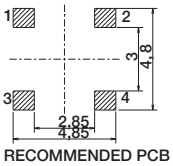

RECOMMENDED PCB LAYOUT

065 0,65 MM HEIGHT

PART NUMBER	HEIGHT $^{+0.1}_{-0.05}$
PTS 530 GS 065 SMTR LFS	0.72
PTS 530 GG 065 SMTR LFS	0.68

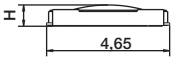

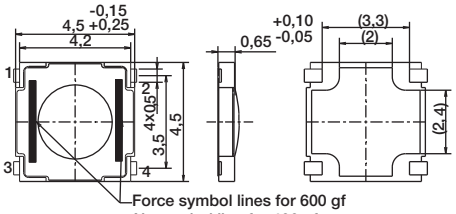

Force symbol lines for 600 gf
No symbol line for 400 gf

Restriction in operation

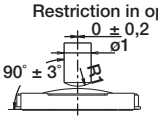

Actuation force identification lines:

N: 100 gf	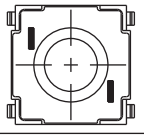
M: 160 gf	No Lines
H: 200 gf	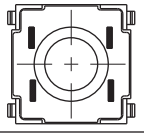
K: 260 gf	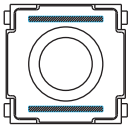

G: 400 gf	No Lines
S: 600 gf	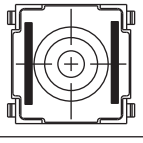

TAPE & REEL

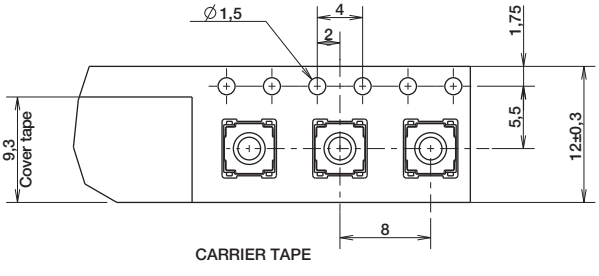

CARRIER TAPE

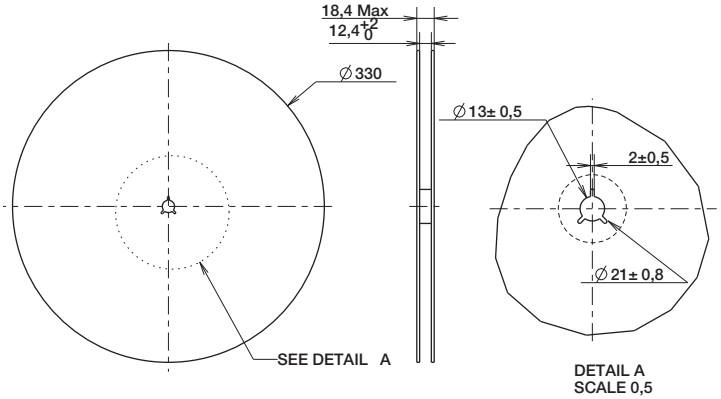

DETAIL A
SCALE 0,5

REEL

Dimensions are shown: mm
Specifications and dimensions subject to change

PTS 540 Series
Ultra Low Profile SMT Top Actuated

Features/Benefits

- ***3.7 x 3.7 mm footprint***
- ***0.35 mm thickness***
- ***High number of cycles***

Typical Applications

- ***MP3 accessories***
- ***Bluetooth headset***
- ***Remote controls***

Specifications

FUNCTION: momentary action
CONTACT ARRANGEMENT: 1 make contact = SPST N.O.
TERMINALS: J type for SMT
TRAVEL: 0.15 mm ± 0.1 mm

Mechanical

Part Number	Operating Force (gf)	Operating Life (operations)
PTS540 JM035 SMTR LFS	160 ± 50	500,000
PTS540 JK035 SMTR LFS	230 ± 50	300,000

Packaging

Switches in reels of 10,000 pieces.
Dimensions of reels according to EIA 481B
External diameter 330 mm

Electrical

MAXIMUM VOLTAGE:	12 VDC
MAXIMUM CURRENT DC:	50 mA
DIELECTRIC STRENGTH:	250 VA C (1mn)
CONTACT RESISTANCE:	≤ 100 mΩ
INSULATION RESISTANCE:	≥ 100 MΩ
BOUNCE TIME:	≤ 10 ms

Environmental

OPERATING TEMPERATURE: -30˚C to 85˚C

Process

SOLDERING: This component is suited to the following methods:
Infrared Reflow Soldering in accordance with IEC61760-1

NOTE: Specifications listed above are for switches with standard options.
For information on specific and custom switches, consult Customer Service Center.

How To Order

Our easy build-a-switch concept allows you to mix and match options to create the switch you need. To order, select desired option from each category and place it in the appropriate box.

For any part number different from those listed above, please consult your local representative.

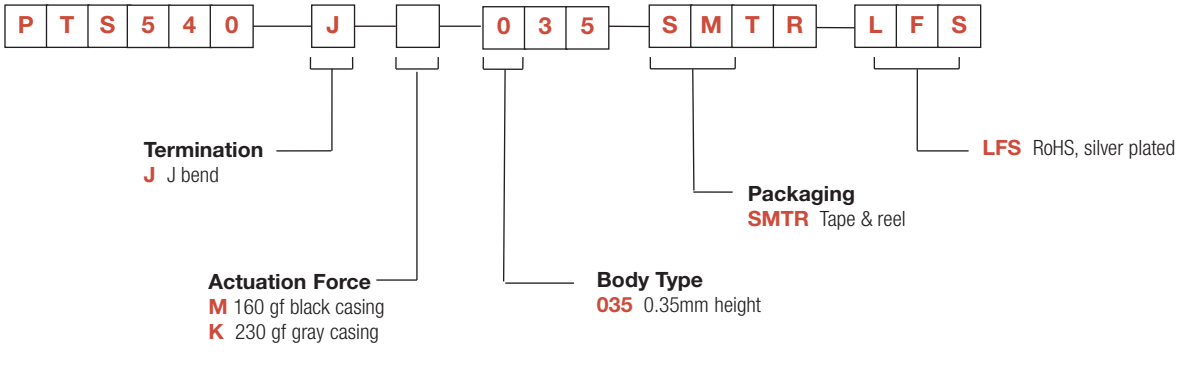

PTS 540 Series
Ultra Low Profile SMT Top Actuated

PTS 540

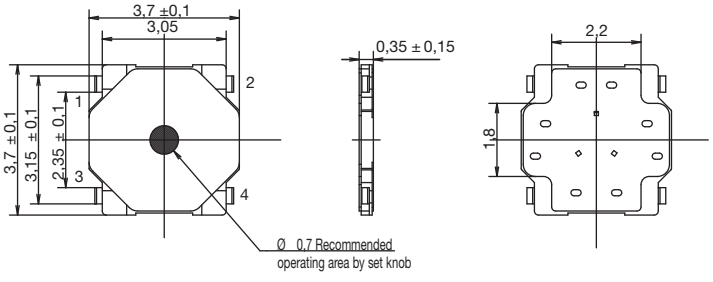

RECOMMENDED PCB

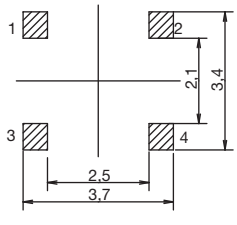

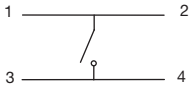

SCHEMATIC

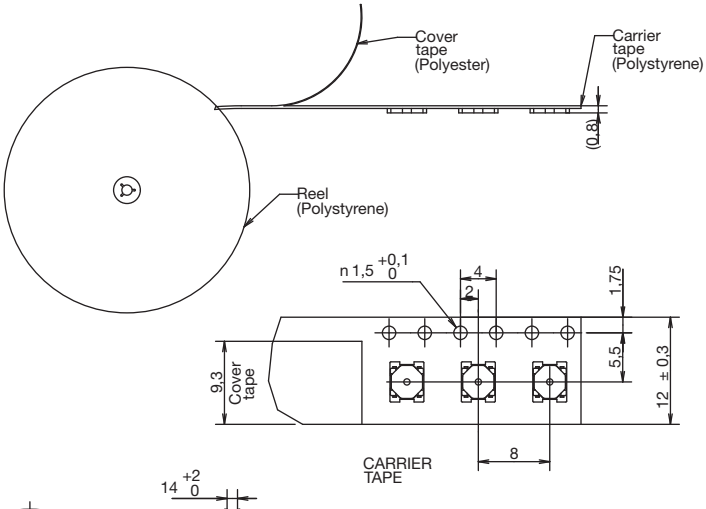

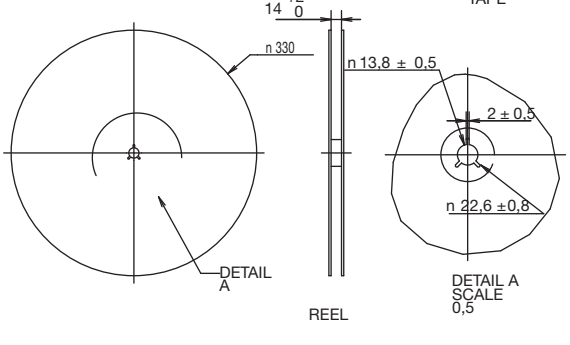

Dimensions are shown: mm
Specifications and dimensions subject to change

PTS 810 Series
Microminiature SMT Top Actuated

Features/Benefits

- ***4.2 x 3.2 mm footprint***
- ***2.5 mm thickness***
- ***High number of cycles***
- ***Color coded actuators***

Typical Applications

- ***Control panels***
- ***Nomad devices***
- ***Remote controls***
- ***Keyless entry system***

Specifications

FUNCTION: momentary action
CONTACT ARRANGEMENT: 1 make contact = SPST N.O.
TERMINALS: J type for SMT
TRAVEL: 160 & 260 gf: 0.15mm ± 0.1mm
400 & 600 gf: 0.20mm ± 0.1mm

	Operating Force (gf)	Operating Life (operations)
PTS810 SJM 250 SMTR LFS	160 ± 50	150,000
PTS810 SJK 250 SMTR LFS	260 ± 70	50,000
PTS810 SJG 250 SMTR LFS	400 ± 100	100,000
PTS810 SJS 250 SMTR LFS	600 ± 150	150,000

Packaging

Switches in reels of 2,900 pieces.
Dimensions of reels according to EIA 481B
External diameter 330 mm

Electrical

MAXIMUM VOLTAGE: 16 VDC
MAXIMUM CURRENT DC: 50 mA
DIELECTRIC STRENGTH: 250 VA C (1mn)
CONTACT RESISTANCE: ≤ 500 mΩ
INSULATION RESISTANCE: ≥ 100 MΩ
BOUNCE TIME: ≤ 10 ms

Environmental

OPERATING TEMPERATURE: -40˚C to 85˚C

Process

SOLDERING: This component is suited to the following methods:
Infrared Reflow Soldering in accordance with IEC61760-1

NOTE: Specifications listed above are for switches with standard options.
For information on specific and custom switches, consult Customer Service Center.

How To Order

Our easy build-a-switch concept allows you to mix and match options to create the switch you need. To order, select desired option from each category and place it in the appropriate box.

For any part number different from those listed above, please consult your local representative.

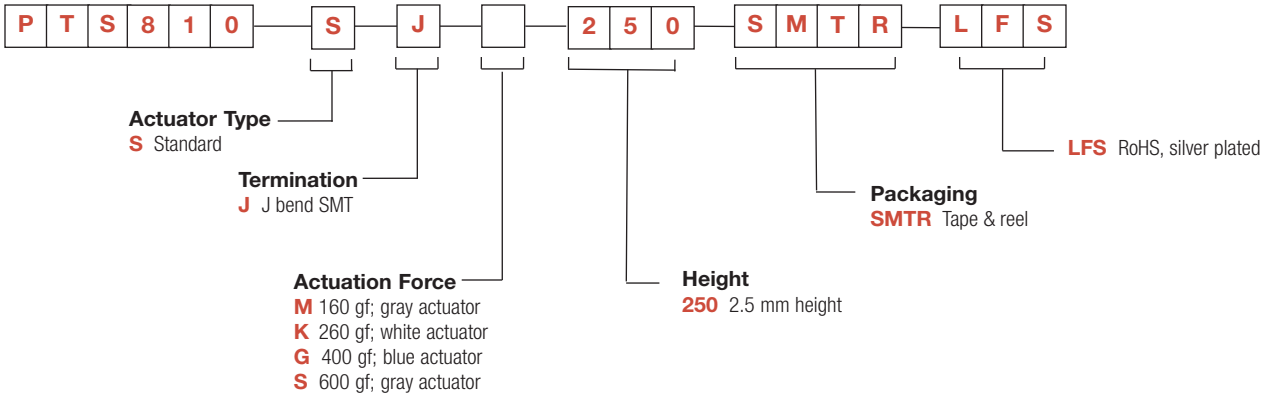

PTS 810 Series
Microminiature SMT Top Actuated

PTS810

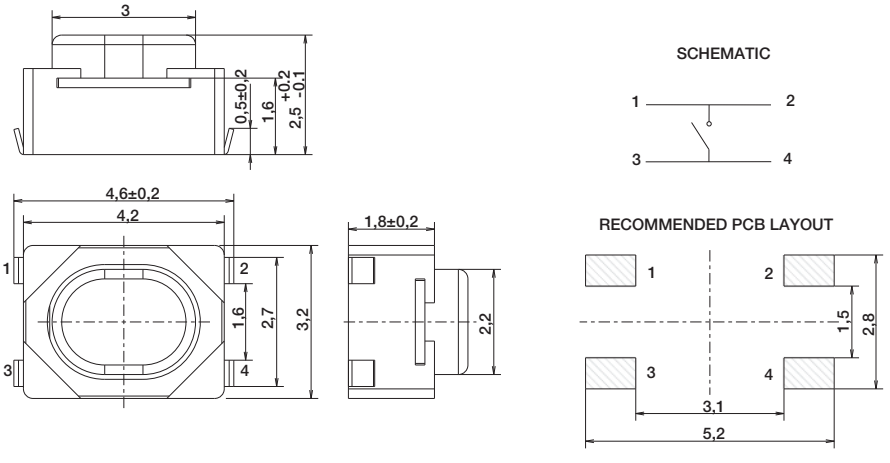

TAPE & REEL

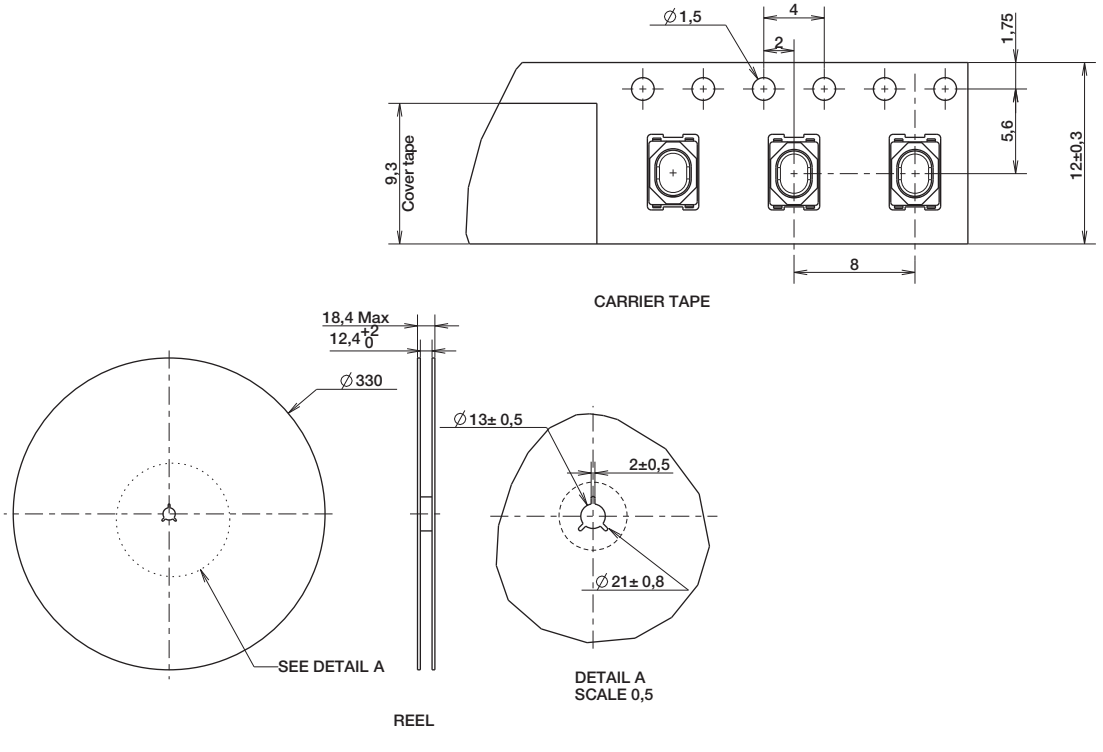

PTS 820 Series
Microminiature SMT Top Actuated

Features/Benefits

- ***3.9 x 2.9 mm footprint***
- ***Three different heights***
- ***High number of cycles***
- ***Reduced footprint***

Typical Applications

- ***Control panels***
- ***Nomad devices***
- ***Remote controls***
- ***Keyless entry system***

Specifications

FUNCTION: momentary action
CONTACT ARRANGEMENT: 1 make contact = SPST N.O.
TERMINALS: J type for SMT
TRAVEL: 0.2mm + 0.1mm / -0.05 mm

	Operating Force (gf)	Life Cycles	Height mm	Pegs
PTS820 J25M SMTR LFS	160 ± 50	200,000	2.5	No
PTS820 J25K SMTR LFS	250 ± 50	100,000	2.5	No
PTS820 J25MP SMTR LFS	160 ± 50	200,000	2.5	Yes
PTS820 J25KP SMTR LFS	250 ± 50	100,000	2.5	Yes
PTS820 J20M SMTR LFS	160 ± 50	200,000	2.0	No
PTS820 J20K SMTR LFS	250 ± 50	100,000	2.0	No
PTS820 J20MP SMTR LFS	160 ± 50	200,000	2.0	Yes
PTS820 J20KP SMTR LFS	250 ± 50	100,000	2.0	Yes
PTS820 J15M SMTR LFS	160 ± 50	200,000	1.5	No
PTS820 J15K SMTR LFS	250 ± 50	100,000	1.5	No
PTS820 J15MP SMTR LFS	160 ± 50	200,000	1.5	Yes
PTS820 J15KP SMTR LFS	250 ± 50	100,000	1.5	Yes

Packaging

Switches in reels of 2,500 pieces for 1.5 and 2.0 mm height
Switches in reels of 2,300 pieces for 2.5 mm height
Dimensions of reels according to EIA 481B
External diameter 330 mm

Electrical

MAXIMUM VOLTAGE:	12 VDC
MAXIMUM CURRENT DC:	50 mA
DIELECTRIC STRENGTH:	100 VA C (1mn)
CONTACT RESISTANCE:	≤ 100 mΩ
INSULATION RESISTANCE:	≥ 100 MΩ
BOUNCE TIME:	≤ 10 ms

Environmental

OPERATING TEMPERATURE: -40˚C to 85˚C

Process

SOLDERING: This component is suited to the following methods:
Infrared Reflow Soldering in accordance with IEC61760-1

NOTE: Specifications listed above are for switches with standard options.
For information on specific and custom switches, consult Customer Service Center.

How To Order

Our easy build-a-switch concept allows you to mix and match options to create the switch you need. To order, select desired option from each category and place it in the appropriate box.

For any part number different from those listed above, please consult your local representative.

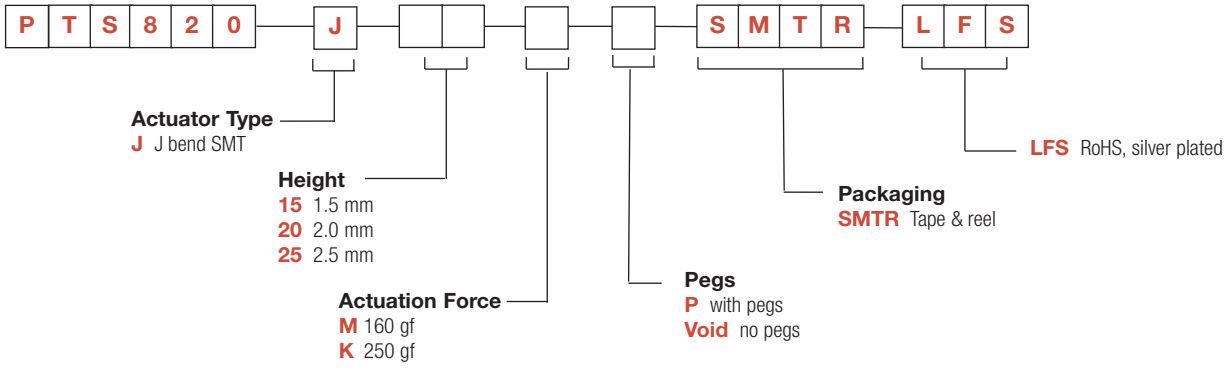

PTS 820 Series
Microminiature SMT Top Actuated

2.5 & 2.0 mm height (H) - version shown here with pegs

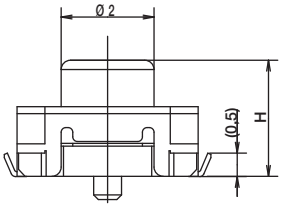

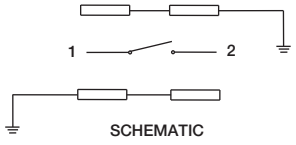

SCHEMATIC

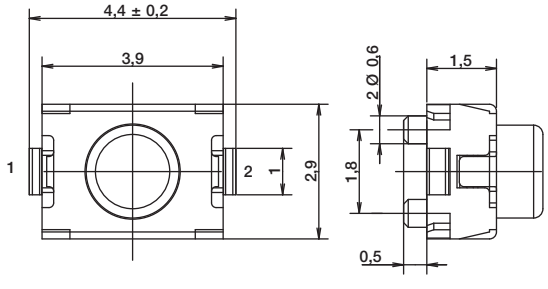

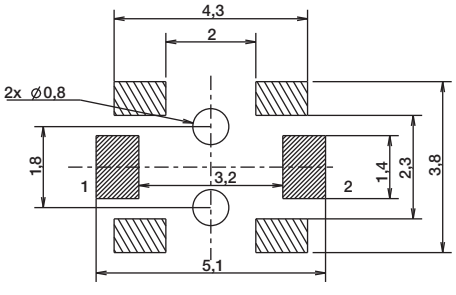

RECOMMENDED PCB LAYOUT

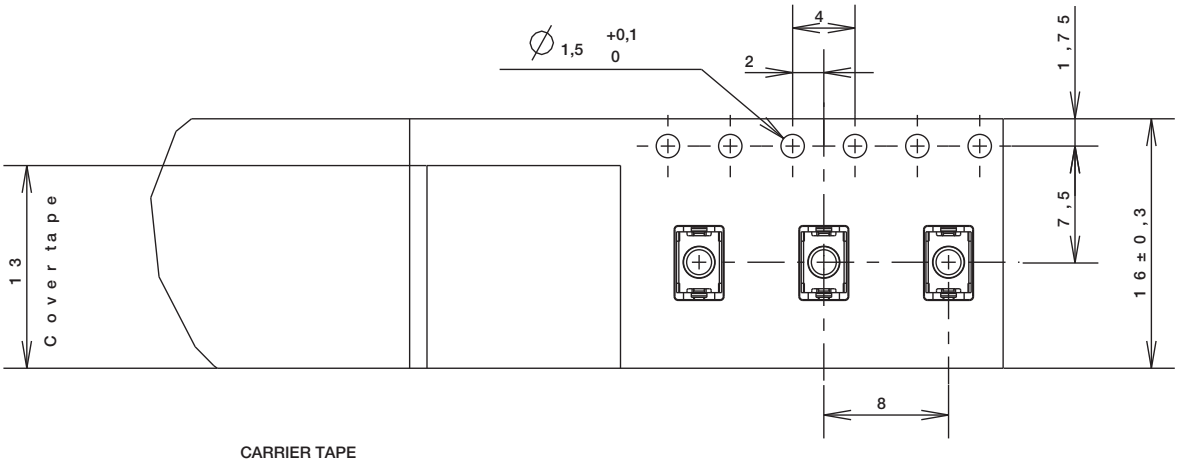

CARRIER TAPE

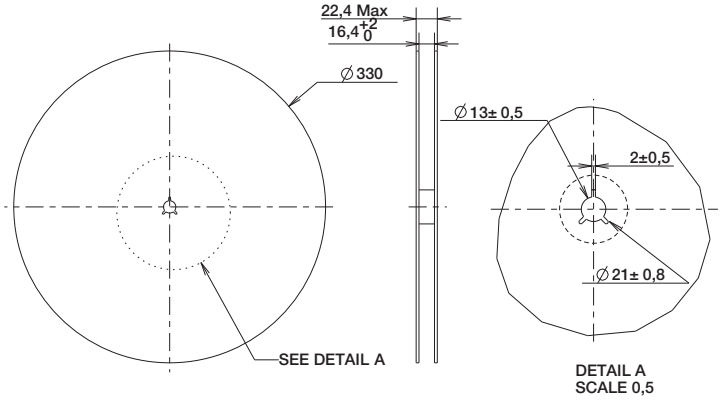

DETAIL A
SCALE 0,5

REEL

1.5 mm height (H) - version shown here with pegs

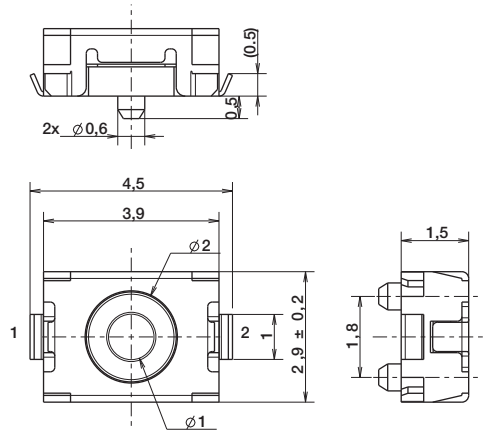

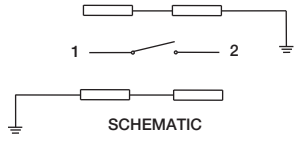

SCHEMATIC

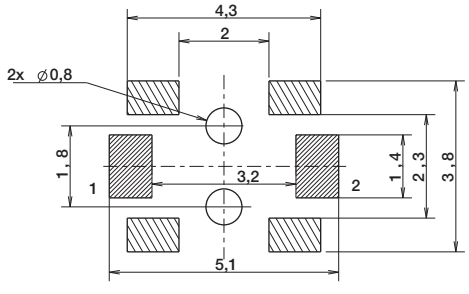

RECOMMENDED PCB LAYOUT

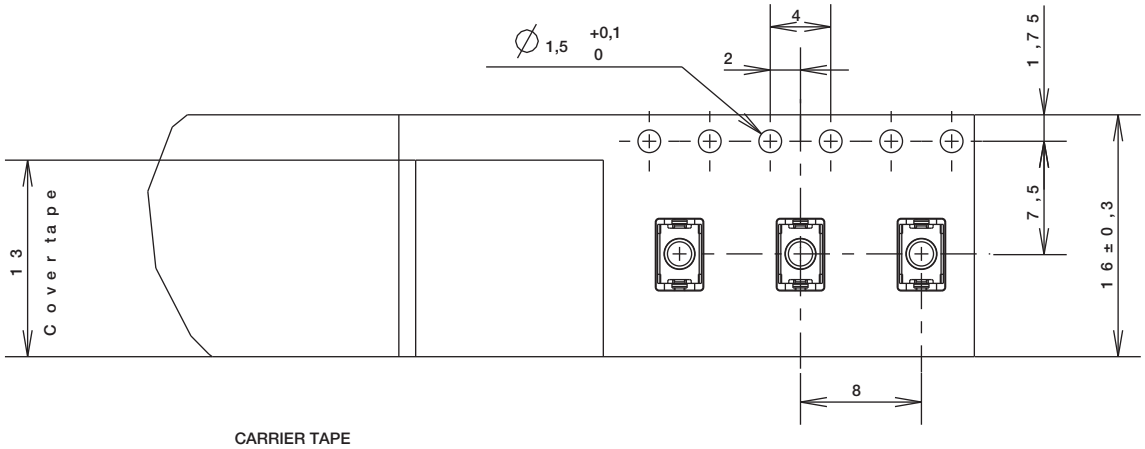

CARRIER TAPE

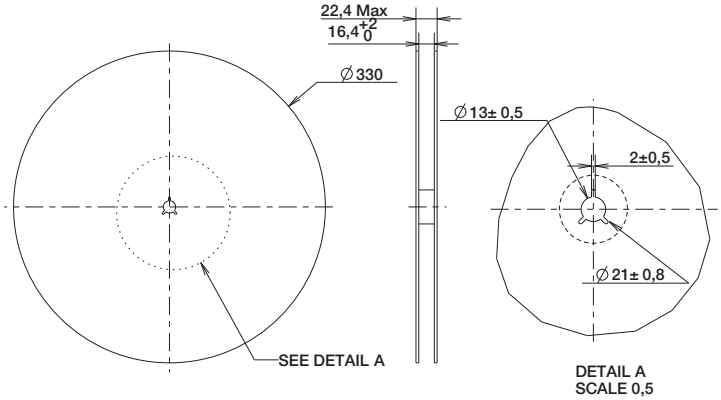

DETAIL A
SCALE 0,5

REEL

PTS 830 Series
Microminiature SMT Top Actuated

Features/Benefits

- ***3.5 x 2.6 mm footprint***
- ***High number of cycles***
- ***Optional ground pin***

Typical Applications

- ***Wearable electronics***
- ***Nomad devices***
- ***Remote controls***
- ***Keyless entry system***

Specifications

FUNCTION: momentary action
CONTACT ARRANGEMENT: 1 make contact = SPST N.O.
TERMINALS: G type for SMT
TRAVEL: 0.15 mm + 0.1 mm

	Operating Force (gf)	Life Cycles	Ground Pin
PTS830 GM140 SMTR LFS	160 ± 50	500,000	No
PTS830 GG140 SMTR LFS	450 ± 80	200,000	No
PTS830 GM140G SMTR LFS	160 ± 50	500,000	Yes
PTS830 GG140G SMTR LFS	450 ± 80	200,000	Yes

Packaging

Switches in reels of 9,500 pieces
Dimensions of reels according to EIA 481B
External diameter 330 mm

Electrical

MAXIMUM VOLTAGE:	12 VDC
MAXIMUM CURRENT DC:	50 mA
DIELECTRIC STRENGTH:	100 VA C (1mn)
CONTACT RESISTANCE:	≤ 100 mΩ
INSULATION RESISTANCE:	≥ 100 MΩ
BOUNCE TIME:	≤ 10 ms

Environmental

OPERATING TEMPERATURE: -40˚C to 85˚C

Process

SOLDERING: This component is suited to the following methods:
Infrared Reflow Soldering in accordance with IEC61760-1

NOTE: Specifications listed above are for switches with standard options.
For information on specific and custom switches, consult Customer Service Center.

How To Order

Our easy build-a-switch concept allows you to mix and match options to create the switch you need. To order, select desired option from each category and place it in the appropriate box.

For any part number different from those listed above, please consult your local representative.

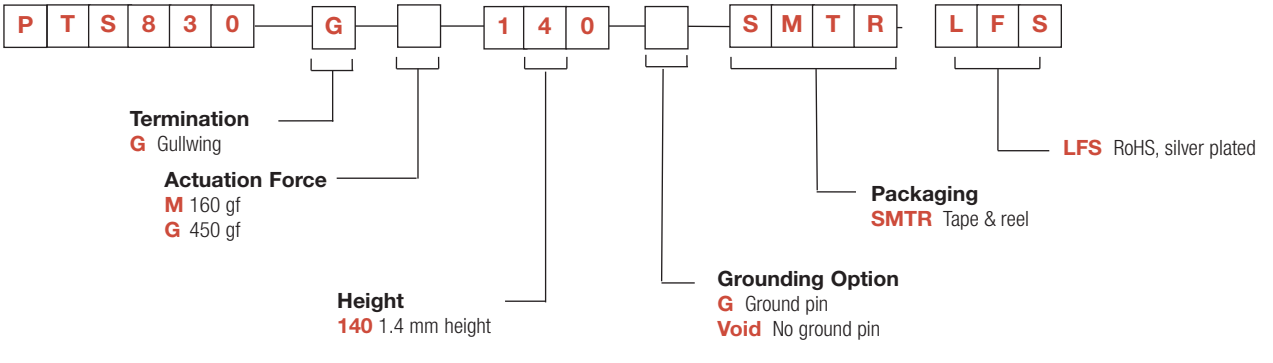

PTS830 GX 140 SMTR LFS

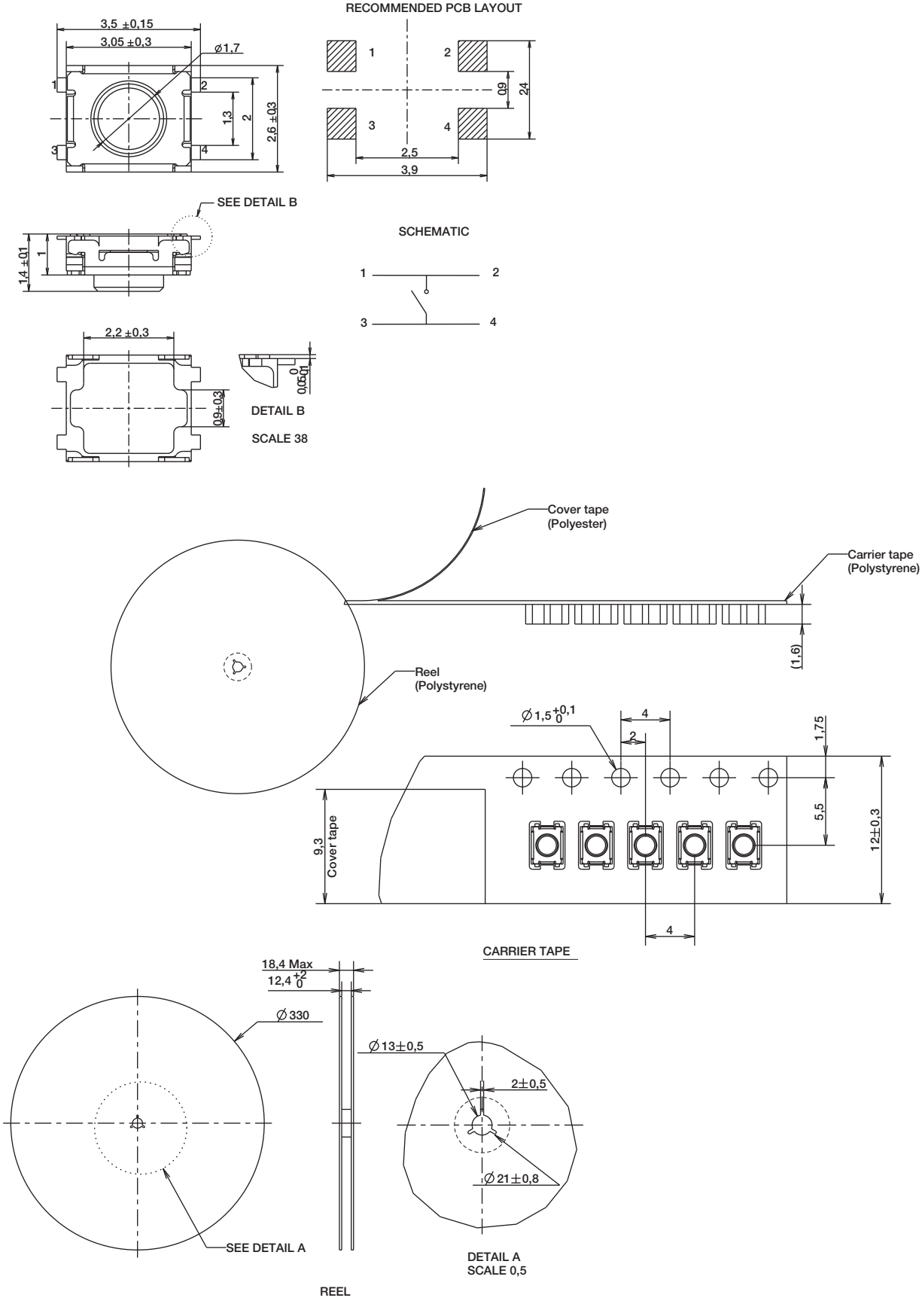

PTS 830 Series
Microminiature SMT Top Actuated

PTS830 GX 140 G SMTR LFS

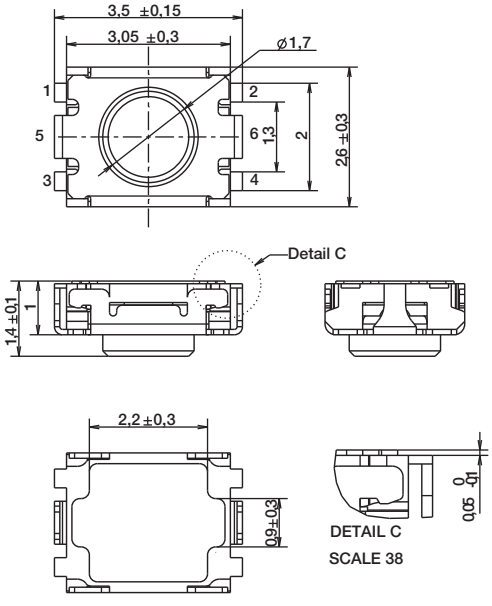

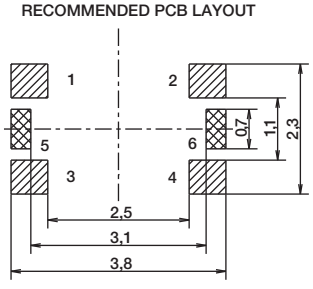

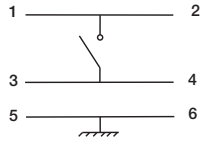

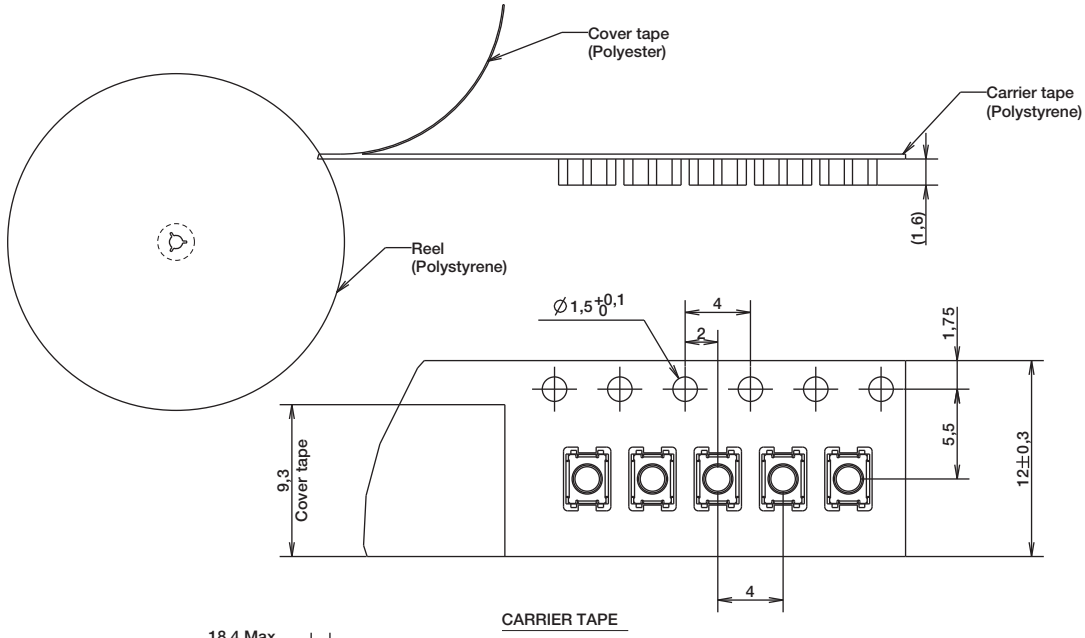

CARRIER TAPE

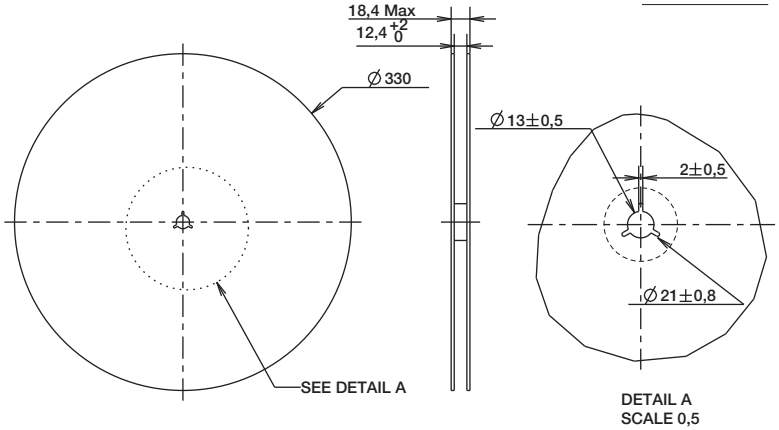

DETAIL A
SCALE 0,5

REEL

Dimensions are shown: mm
Specifications and dimensions subject to change

PTS 840 Series
Microminiature SMT Side Actuated

Features/Benefits

- *3.5 x 3.55 mm footprint*
- *Front PIP leads option for strong shear resistance*
- *ESD pin option*
- *Reduced footprint*

Typical Applications

- *Nomad devices*
- *Remote controls*
- *Personal health diagnostics*
- *Consumer electronics*

Specifications

FUNCTION: momentary action
CONTACT ARRANGEMENT: 1 make contact = SPST N.O.
TERMINALS: G and front PIP types for SMT
TRAVEL: 0.2mm + 0.2mm / -0.1 mm
LIFE: 100,000 cycles

Type	Operating Force (gf)	SMT Leads	Pegs
Without ground pin			
PTS840 GM SMTR LFS	160 -40/+70	G leads	No
PTS840 GK SMTR LFS	220 -70/+80	G leads	No
PTS840 PM SMTR LFS	160 -40/+70	P leads	No
PTS840 PK SMTR LFS	220 -70/+80	P leads	No
PTS840 GMP SMTR LFS	160 -40/+70	G leads	Yes
PTS840 GKP SMTR LFS	220 -70/+80	G leads	Yes
With ground pin			
PTS840 ESDGM SMTR LFS	160 -40/+70	G leads	No
PTS840 ESDGK SMTR LFS	220 -70/+80	G leads	No
PTS840 ESDPM SMTR LFS	160 -40/+70	P leads	No
PTS840 ESDPK SMTR LFS	220 -70/+80	P leads	No
PTS840 ESDGMP SMTR LFS	160 -40/+70	G leads	Yes
PTS840 ESDGKP SMTR LFS	220 -70/+80	G leads	Yes

Electrical

MAXIMUM VOLTAGE:	12 VDC
MAXIMUM CURRENT DC:	50 mA
DIELECTRIC STRENGTH:	250 VA C (1mn)
CONTACT RESISTANCE:	≤ 500 mΩ
INSULATION RESISTANCE:	≥ 100 MΩ
BOUNCE TIME:	≤ 10 ms

Environmental

OPERATING TEMPERATURE: -40˚C to 85˚C

Process

SOLDERING: This component is suited to the following methods:
Infrared Reflow Soldering in accordance with IEC61760-1

Packaging

In reels of 3,500 pieces
Dimensions of reels according to EIA 481B
External diameter 330 mm

NOTE: Specifications listed above are for switches with standard options.
For information on specific and custom switches, consult Customer Service Center.

How To Order

Our easy build-a-switch concept allows you to mix and match options to create the switch you need. To order, select desired option from each category and place it in the appropriate box.

For any part number different from those listed above, please consult your local representative.

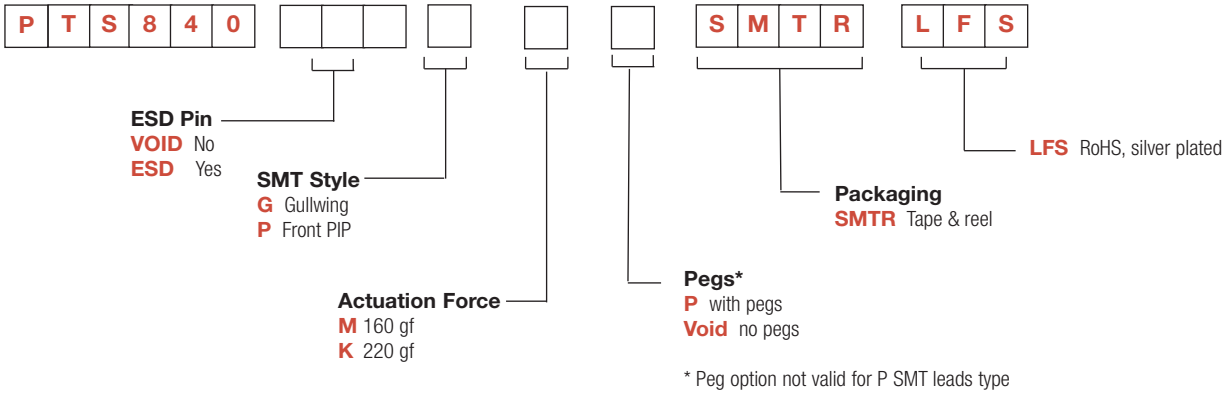

Design Recommendations

- "P" leads are recommended for applications where shear resistance is of importance
- When a precise alignment between application button and the switch is requested, version with pegs are the right choice to limit the possible floating of the switch during solderability.

Dimensions are shown: mm
Specifications and dimensions subject to change

Standard G SMT Leads with ESD and Peg options

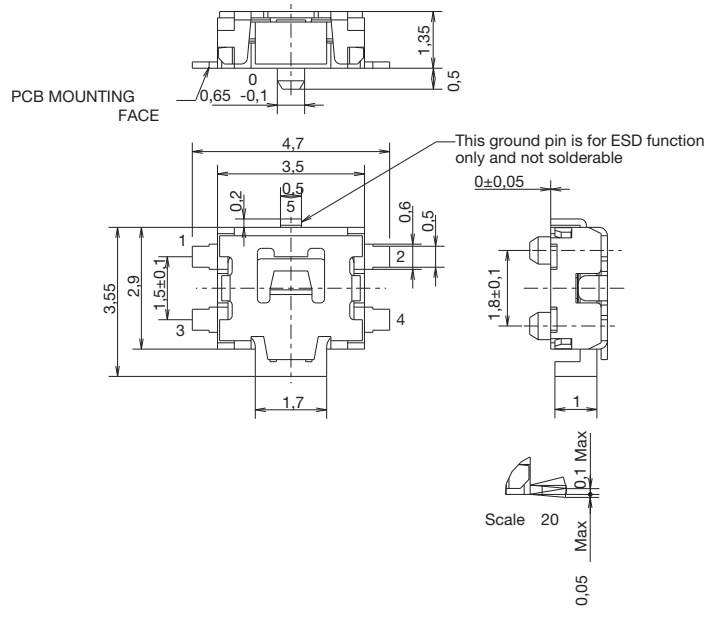

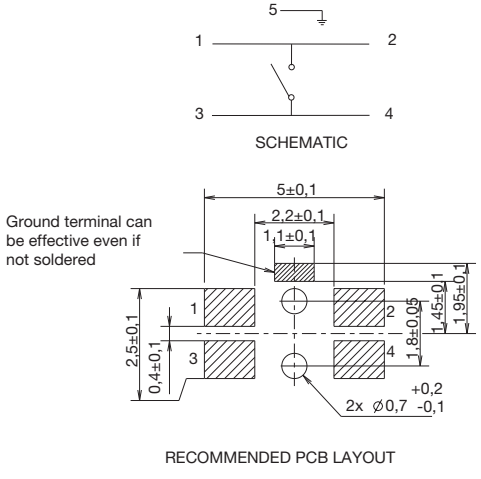

P SMT Leads with ESD option

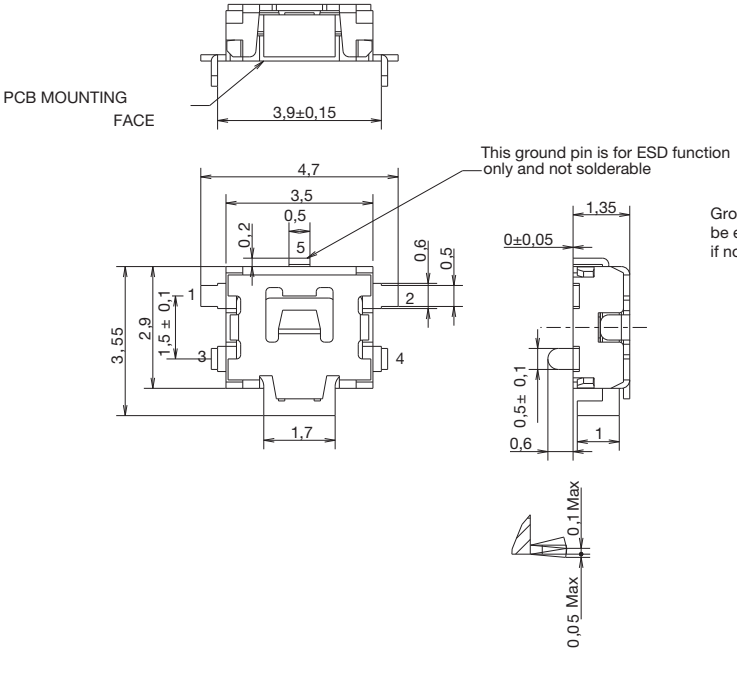

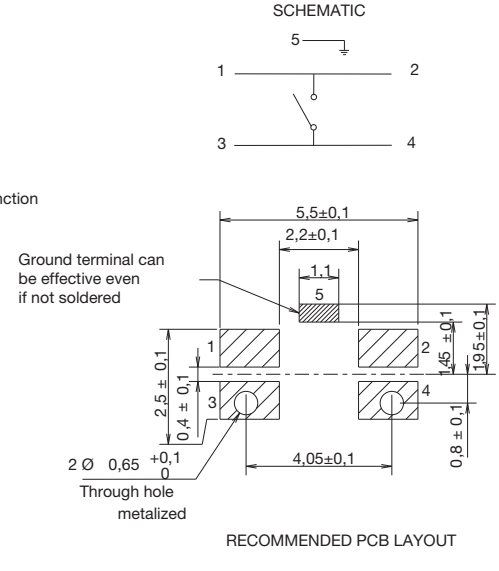

PTS 840 Series
Microminiature SMT Side Actuated

TAPE & REEL

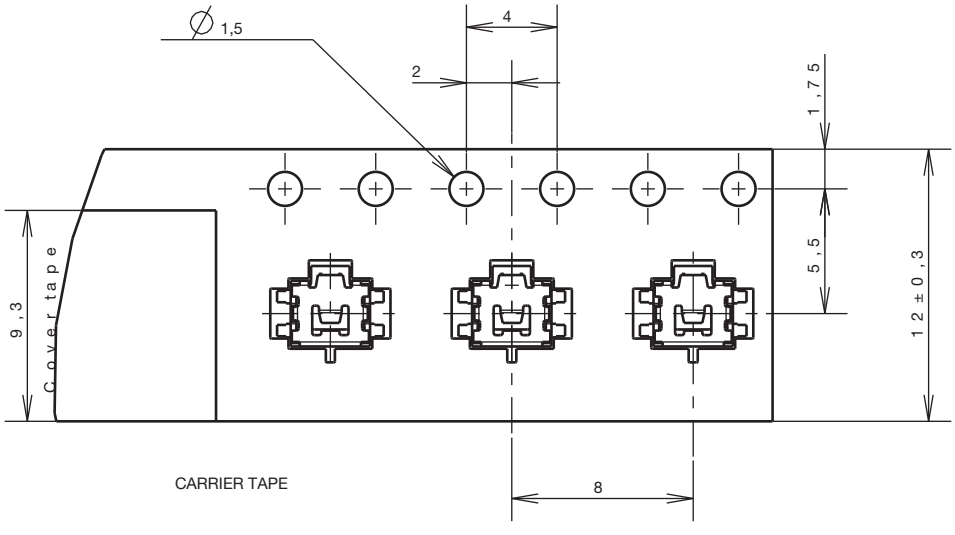

CARRIER TAPE

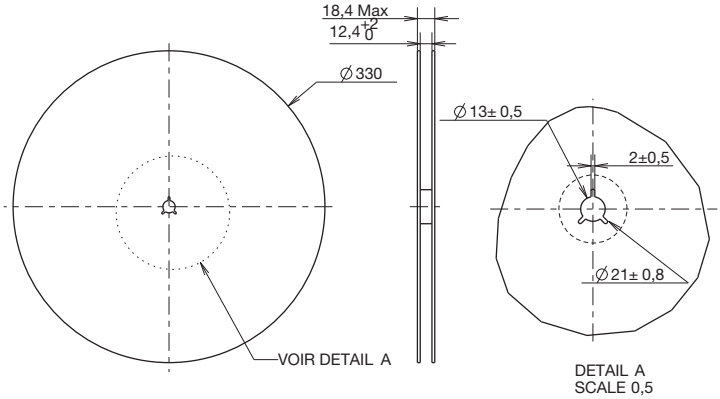

DETAIL A
SCALE 0,5

REEL

KSR Series
Subminiature Tact Switch for SMT

Features/Benefits

- ***4 actuation forces***
- ***G terminations***
- ***N.O. and N.C.***
- ***Detect type available***
- ***Rubber actuator***
- ***IP50 sealed***
- ***RoHS compliant and compatible***

Typical Applications

- ***Automotive***
- ***Medical equipment***
- ***Industrial electronics***
- ***Smart meters***

Specification

FUNCTION: momentary action
CONTACT ARRANGEMENT: Normally Open
TERMINALS: Gullwing type for SMT

Mechanical

Type	Operating force Newtons (grams)	Operating life (operations)	Travel (mm)
KSR211G LFS / KSR213G LFG	1,5 < 1,85 (185) < 2,2	100,000	0,25 ± 0,15
KSR221G LFS / KSR223G LFG	1,9 < 2,25 (225) < 2,6	100,000	0,3 ± 0,15
KSR231G LFS /KSR233G LFG	2,25 < 3,00 (300)< 3,75	100,000	0,35 ± 0,15
KSR251G LFS / KSR253G LFG	3,4 < 4,50 (450) < 5,6	100,000	0,5 ± 0,15
KSR221G NC LFS	1,5 < 2,25 (225) < 3	30,000	0,3 ± 0,15
KSR223G NC LFG	1,5 < 2 (200) < 2,5	30,000	0,3 ± 0,15

Overload: 20 Newtons
Detect switch versions are available. Please see Detect chapter KSR2D/M series.

Packaging

Switches are delivered on continuous tape, in reels of 2,500 pieces.

Electrical

	Silver	Gold
MAXIMUM POWER:	1 VA	0.2 VA
MAXIMUM VOLTAGE:	32 VDC	32 VDC
MINIMUM VOLTAGE:	20 mV	20 mV
MAXIMUM CURRENT DC:	50 mA	10 mA
MINIMUM CURRENT DC:	1 mA	1 mA

CONTACT RESISTANCE: ≤ 100 mΩ
INSULATION RESISTANCE: (100 V): 1G Ω (between terminals)
BOUNCE TIME: 1 ms max.

Environmental

	Silver	Gold
OPERATING TEMPERATURE:	-40˚C to 85˚C	-40˚C to 125˚C
STORAGE TEMPERATURE:	-55˚C to 85˚C	-55˚C to 125˚C

Process

SOLDERING: Compatible with lead free reflow soldering process.

NOTE: Specifications listed above are for switches with standard options.
For information on specific and custom switches, consult Customer Service Center.

How To Order

Our easy build-a-switch concept allows you to mix and match options to create the switch you need. To order, select desired option from each category and place it in the appropriate box.

However, please note that all the combinations of these options are not feasible.
For any part number different from those listed above, please consult your local representative.

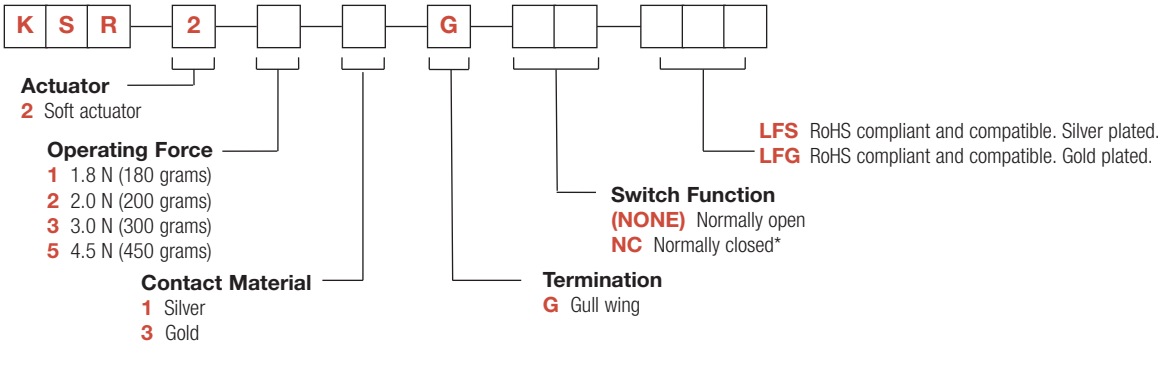

*Available on KSR223G only.

Dimensions are shown: mm
Specifications and dimensions subject to change

KSR

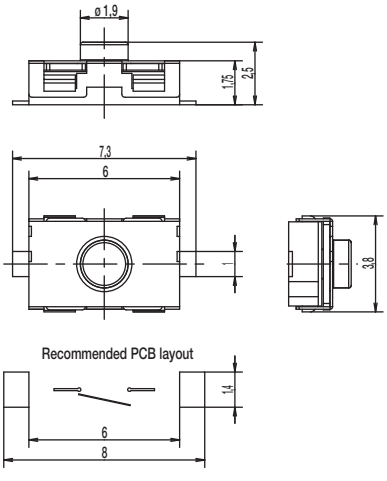

TAPE & REEL

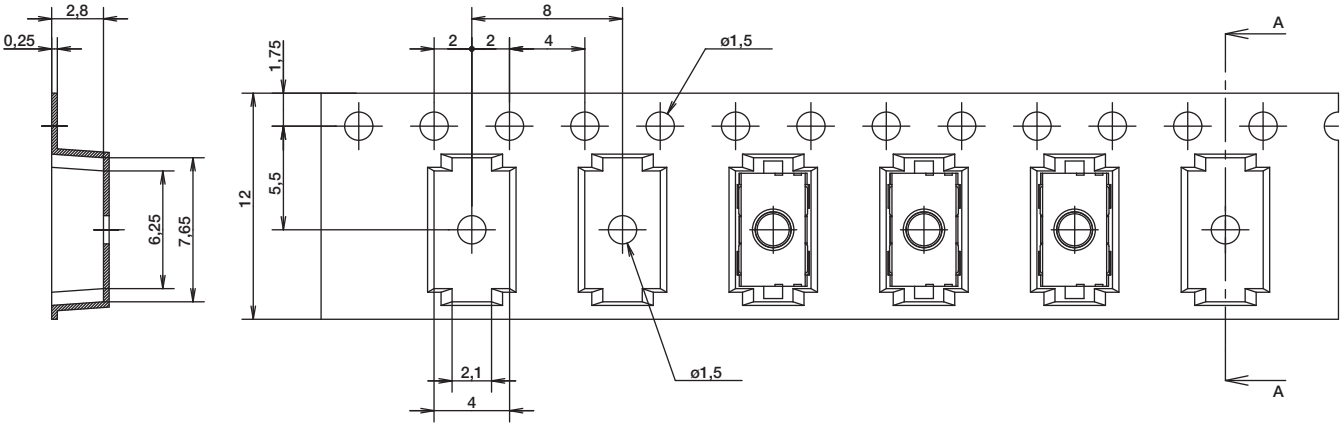

DIRECTION OF FEED

First Angle Projection

Dimensions are shown: mm
Specifications and dimensions subject to change

KSR Long Life-200,000 cycles-Gold and Silver Series Subminiature Tact Switch for SMT

Features/Benefits

- ***4 actuation forces***
- ***G terminations***
- ***N.O.***
- ***Detect type available***
- ***Rubber actuator***
- ***IP50 sealed***
- ***RoHS compliant and compatible***

Typical Applications

- ***Automotive***
- ***Medical equipment***
- ***Industrial electronics***

Specification

FUNCTION: momentary action
CONTACT ARRANGEMENT: Normally Open
TERMINALS: Gullwing type for SMT

Mechanical

Type	Operating force(Fa) Newtons (grams)	Operating life (operations)	Travel (mm)
Silver versions			
KSR212G LFS	1,5 < 1,85 (185) < 2,2	200,000	0,25 ± 0,15
KSR222G LFS	1,9 < 2,25 (225) < 2,6	200,000	0,3 ± 0,15
KSR232G LFS	2,25 < 3,00 (300)< 3,75	200,000	0,35 ± 0,15
KSR252G LFS	3,4 < 4,50 (450) < 5,6	200,000	0,5 ± 0,15
Gold versions			
KSR214G LFS	1,5 < 1,85 (185) < 2,2	200,000	0,25 ± 0,15
KSR224G LFS	1,9 < 2,25 (225) < 2,6	200,000	0,3 ± 0,15
KSR234G LFS	2,25 < 3,00 (300)< 3,75	200,000	0,35 ± 0,15
KSR254G LFS	3,4 < 4,50 (450) < 5,6	200,000	0,5 ± 0,15

OVERLOAD: 20 Newtons

Packaging

Switches are delivered on continuous tape, in reels of 2,500 pieces.

Electrical

	Silver	Gold
MAXIMUM POWER:	1 VA	0.2 VA
MAXIMUM VOLTAGE:	32 V dc	32 V dc
MINIMUM VOLTAGE:	20 m Vdc	20 m Vdc
MAXIMUM CURRENT DC:	50 mA	10 mA
MINIMUM CURRENT DC:	1 mA	1 mA

CONTACT RESISTANCE: ≤ 100 m Ω
INSULATION RESISTANCE (100 V): 1 G Ω (between terminals)
BOUNCE TIME: 1 ms max

Environmental

	Silver	Gold
OPERATING TEMPERATURE:	-40˚C to 85˚C	-40˚C to 125˚C
STORAGE TEMPERATURE:	-55˚C to 85˚C	-55˚C to 125˚C

Process

SOLDERING: Compatible with lead free reflow soldering process.

NOTE: Specifications listed above are for switches with standard options.
For information on specific and custom switches, consult Customer Service Center.

How To Order

Our easy build-a-switch concept allows you to mix and match options to create the switch you need. To order, select desired option from each category and place it in the appropriate box.

However, please note that all the combinations of these options are not feasible.
For any part number different from those listed above, please consult your local representative.

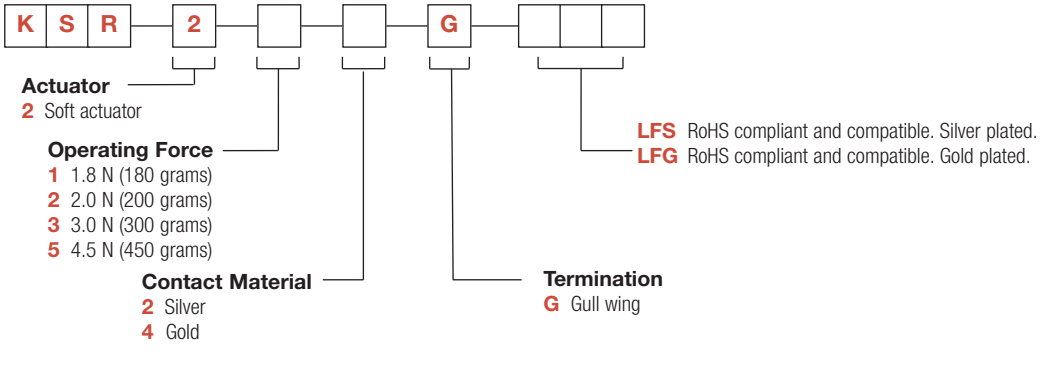

Dimensions are shown: mm
Specifications and dimensions subject to change

KSR Long Life-200,000 cycles-Gold and Silver Series Subminiature Tact Switch for SMT

KSR

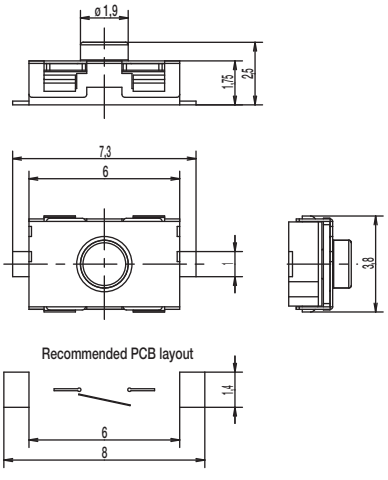

TAPE & REEL

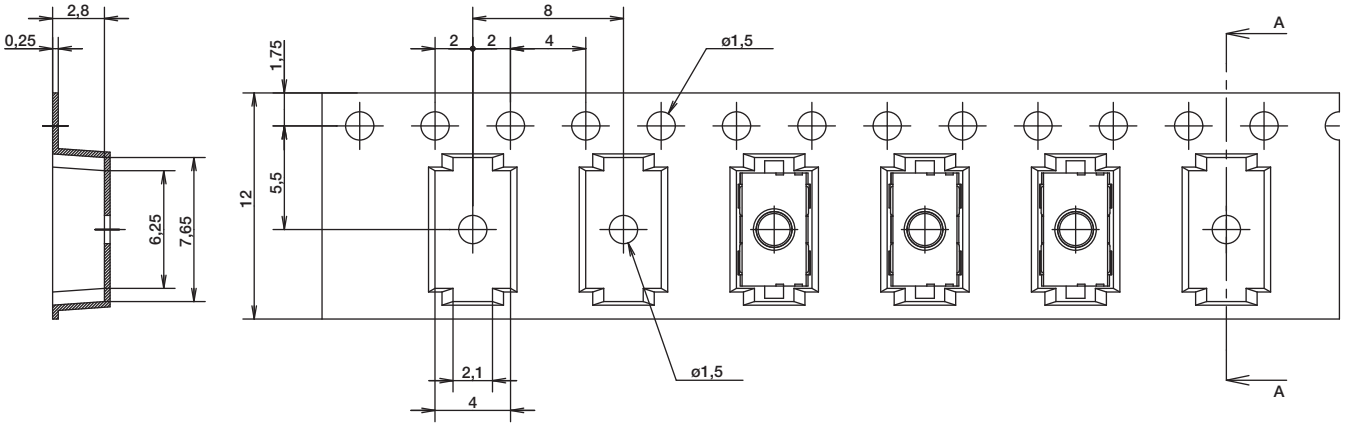

DIRECTION OF FEED

First Angle Projection

Dimensions are shown: mm
Specifications and dimensions subject to change

Features/Benefits

- *Low profile of 1.7 mm*
- *Excellent tactile feel*
- *High shear force*
- *Range of actuation forces*
- *Large flat top*
- *RoHS compliant and compatible*

Typical Applications

- *Cellular phone*
- *Industrial electronics*
- *Health diagnostic electronics*

Specification

FUNCTION: momentary action
CONTACT ARRANGEMENT: N.O.
TERMINALS: Gullwing
IP40 sealed

Mechanical

OVERLOAD: 20N
TACTILE FEELING: 2 and 4N: 25% min.
2.5N: 30% min.

Type	Operating force Newtons (grams)	Operating life (operations)	Travel (mm)
KSS221G	2.0 (200) ± 0.5	100,000	0,3 ± 0,15
KSS231G	2.5 (250) ± 0.5	100,000	0,3 ± 0,10
KSS241G	4.0 (400) ± 1.0	100,000	0,3 ± 0,15

NOTE: Specifications listed above are for switches with standard options.
For information on specific and custom switches, consult Customer Service Center.

Electrical

	Silver	Gold
MAXIMUM POWER:	1 VA	0.2 VA
MAXIMUM VOLTAGE:	32 VDC	32 VDC
MAXIMUM CURRENT:	50 mA	10 mA
MINIMUM CURRENT:	1 mA	1 mA

DIELECTRIC STRENGTH: ≥ 250 VDC
CONTACT RESISTANCE: < 100 mΩ
INSULATION RESISTANCE (100 VDC): ≥ 10^9 Ω
BOUNCE TIME: < 3 ms

Environmental

	Silver	Gold
OPERATING TEMPERATURE:	-40°C to 85°C	-40°C to 125°C
STORAGE TEMPERATURE:	-55°C to 85°C	-55°C to 125°C

Process

Infared reflow soldering in accordance with IEC 61760-1

Packaging

Tape and reels in reels of 3,000 pieces.
External diameter 330mm ± 2mm.

How To Order

Our easy build-a-switch concept allows you to mix and match options to create the switch you need. To order, select desired option from each category and place it in the appropriate box.

However, please note that all the combinations of these options are not feasible.
For any part number different from those listed above, please consult your local representative.

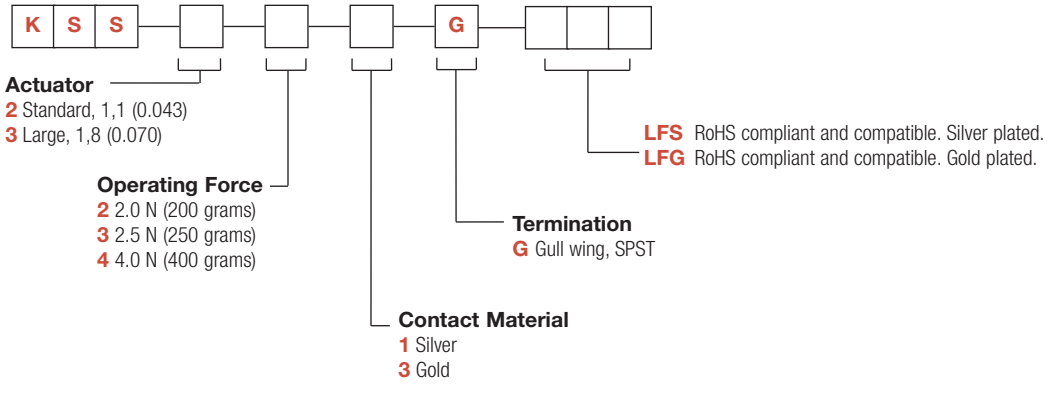

KSS Series
Subminiature SMT Side Actuated

KSS

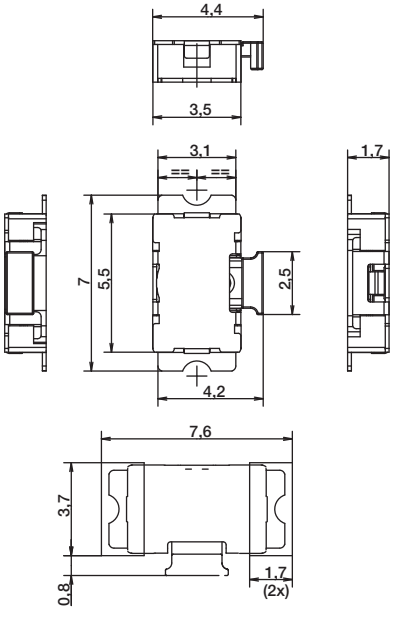

ACTUATOR

2 STANDARD, 1,1 (0.043)

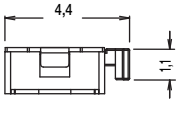

3 LARGE, 1,8 (0.070)

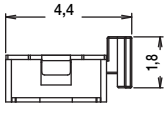

TAPE & REEL

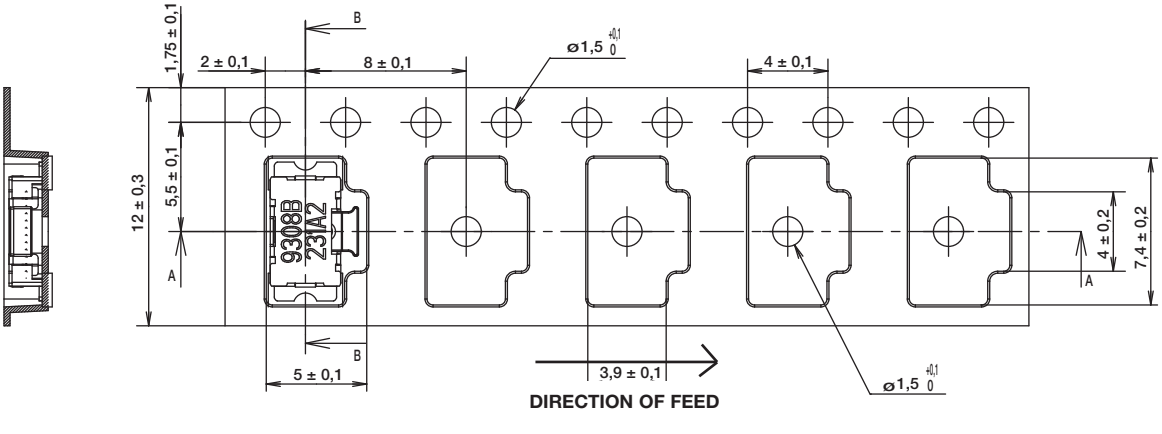

First Angle Projection

Dimensions are shown: mm
Specifications and dimensions subject to change

KSC Series
Sealed Tact Switch for SMT

Features/Benefits

- ***Positive tactile feeling***
- ***J or G terminations***
- ***Various heights***
- ***IP67***

Typical Applications

- ***Automotive***
- ***Cellular phones***
- ***Industrial electronics***
- ***Network infrastructure and IT***
- ***Elevator***

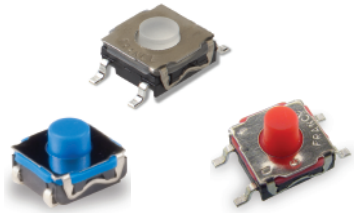

Specification

FUNCTION: Momentary action
CONTACT ARRANGEMENT: 1 make contact = SPST, N.O.
TERMINALS: J bend & Gullwing type for SMT
SEALING: IP67 except KSC5 (IP50)

Liability Limitation

This datasheet does not provide enough information for applications that require a certain level of quality or safety such as automotive, medical systems, or safety equipement. Please contact customer service for the contractual specification package.

Environmental

	Silver	Gold
OPERATING TEMPERATURE:	-40˚C to 85˚C	-40˚C to 125˚C
STORAGE TEMPERATURE:	-55˚C to 85˚C	-55˚C to 125˚C

Process

SOLDERING: Depending on the application, this component is suited to the following methods:
– Terminals being silver or gold plated over a nickel barrier, the use of slightly activated flux is suitable.
– Soldering on double wave machine for vertical versions: soldering time ≤ 5 sec.
– Cleaning according to typical washing processes.
– Infrared Reflow Soldering in accordance with IEC 61760-1.

Electrical

	Silver	Gold
MAXIMUM POWER:	1 VA	0.2 VA
MAXIMUM VOLTAGE:	32 VDC	32 VDC
MINIMUM VOLTAGE:	20 mV	20 mV
MAXIMUM CURRENT:	50 mA	10 mA
MINIMUM CURRENT:	1 mA*	0.1 mA

DIELECTRIC STRENGTH (50 Hz, 1 min.): ≥ 250 Vrms
CONTACT RESISTANCE: ≤ 100mΩ
INSULATION RESISTANCE (100 V): ≥ 10M Ω
BOUNCE TIME: ≤ 1 ms
* Ultra low current with 10 µA - 1 VDC version are available upon request for KSC2 and KSC4

Packaging

Tape and Reel (see series for quantity information)

NOTE: Specifications listed above are for switches with standard options.

KSC Product Range

KSC1	KSC2	KSC3	KSC4	KSC5	KSC6	KSC7	KSC8	KSC9	KSC10
Without actuator	Soft actuator	Hard actuator	Soft actuator	Hard actuator	Hard actuator	Soft actuator	Hard actuator	Hard actuator	Soft actuator
H = 2.5 mm	H = 3.5 mm	H = 3.5 mm	H = 5.2 mm	H = 5.6 mm	H = 7.7 mm	H = 4.3 mm	H = 4.9 mm	H = 7.7 mm compatible with button	H = 4.9 mm
IP67	IP67	IP67	IP67	IP50	IP67	IP67	IP67	IP67	IP67

Note: KSC Series is subject to variants. Please contact customer service for other options.

KSC Series
Sealed Tact Switch for SMT

J J BEND

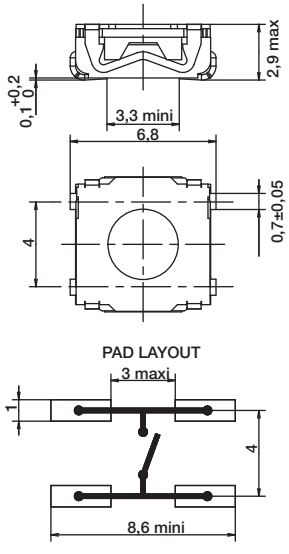

G GULLWING

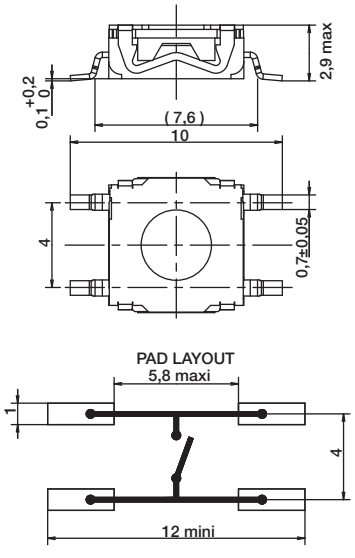

12 MM

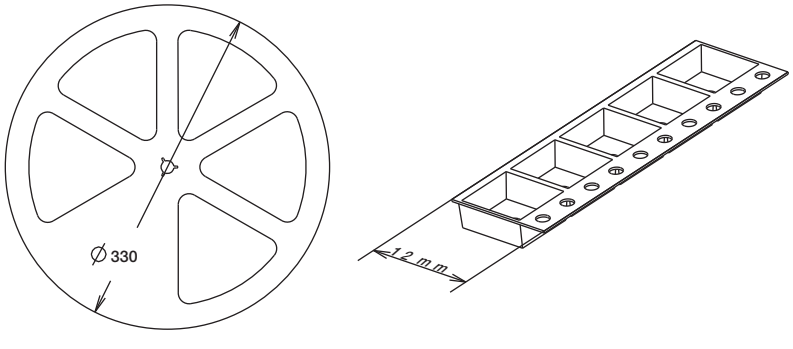

16 MM

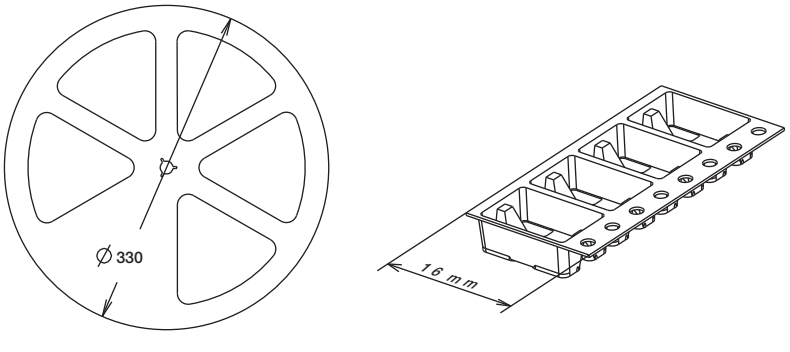

12 mm	Pieces	16 mm	Pieces
KSC1J	2,000	KSC1G	2,000
KSC2J	2,000	KSC2G	2,000
KSC3J	2,000	KSC3G	2,000
		KSC4J & G	1,000
		KSC5J & G	1,000
		KSC6J & G	750
		KSC7J & G	1,000
		KSC8J & G	1,000
		KSC9J & G	750
		KSC10J & G	1,000

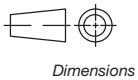

Dimensions are shown: mm
Specifications and dimensions subject to change

KSC1 without actuator 2,5 mm high

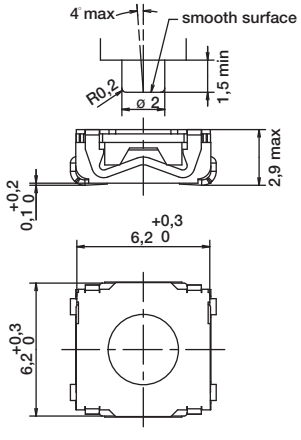

Type	Operating force FA (Newtons)	Operating life (operations)	Travel (mm)
KSC121	1.8 ± 0.65	200,000	0.3 ± 0.15
KSC141	3 ± 0.75	200,000	0.3 ± 0.15
KSC151	5.5 ± 1.4	100,000	0.35 ± 0.15

Packaging

Switches delivered on continuous tape & reels of 2,000 pieces
Dimensions according to EIA RS-481/ IEC 60286-3 standard
External diameter 330 ± 2 mm

How To Order

Our easy build-a-switch concept allows you to mix and match options to create the switch you need. To order, select desired option from each category and place it in the appropriate box.

However, please note that all the combinations of these options are not feasible.
For any part number different from those listed above, please consult your local representative.

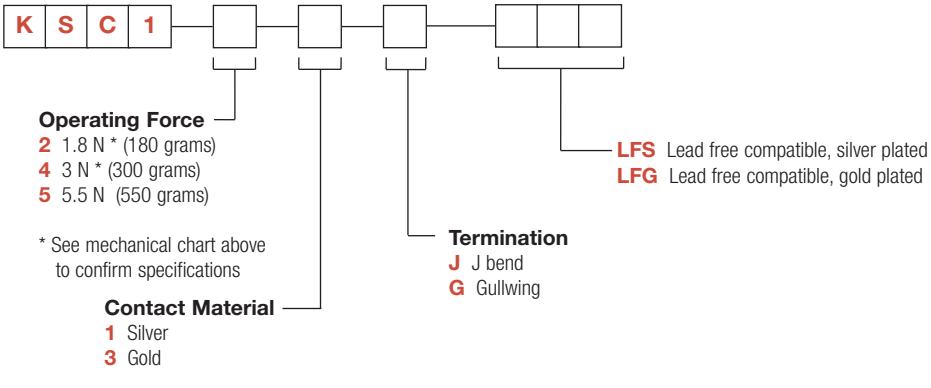

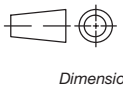
First Angle Projection

Dimensions are shown: mm
Specifications and dimensions subject to change

KSC2 Series
Sealed Tact Switch for SMT

KSC2 soft actuator 3,5 mm high

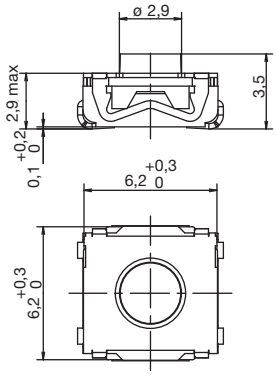

Type	Operating force FA (Newtons)	Operating life (operations)	Travel (mm)
KSC201	1.6 ± 0.6	5,000,000	0.3 ± 0.2
KSC221	2 ± 0.5	500,000	0.35 + 0.3/- 0.1
KSC222	2 ± 0.5	1,000,000	0.35 ± 0.15
KSC241	3.5 ± 0.9	300,000	0.5 ± 0.2
KSC251	5.55 ± 1.45	300,000	0.5 ± 0.2
KSC231 SPD	3.5 ± 0.9	300,000	0.5 ± 0.2
KSC241 SPD	3.55 ± 0.9	300,000	0.5 ± 0.2
KSC251 SPD	6.2 ± 1.55	100,000	0.6 ± 0.2

Packaging

Switches delivered on continuous tape & reels of 2,000 pieces
Dimensions according to EIA RS-481/ IEC 60286-3 standard
External diameter 330 ± 2 mm

How To Order

Our easy build-a-switch concept allows you to mix and match options to create the switch you need. To order, select desired option from each category and place it in the appropriate box.

However, please note that all the combinations of these options are not feasible.
For any part number different from those listed above, please consult your local representative.

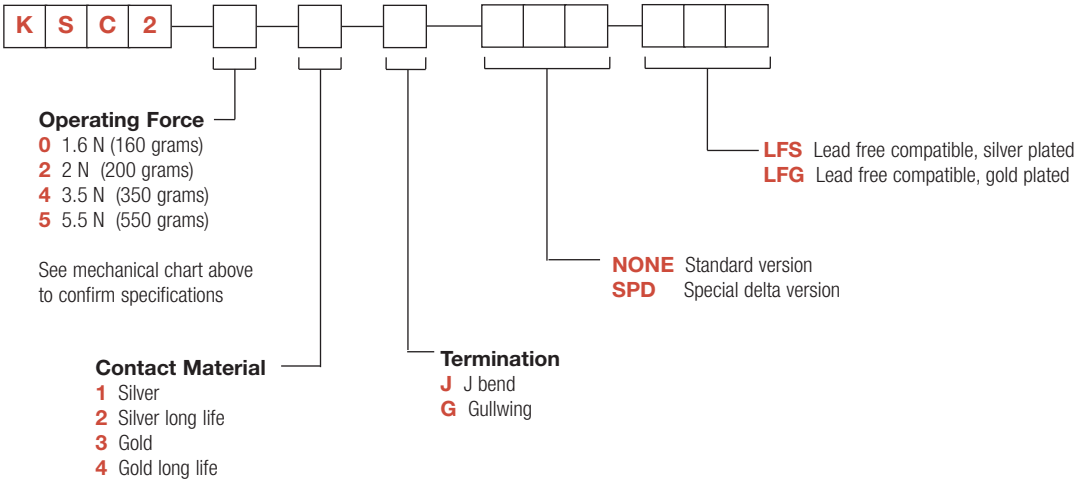

First Angle Projection

Dimensions are shown: mm
Specifications and dimensions subject to change

KSC3 hard actuator 3,5 mm high

Type	Operating force FA (Newtons)	Operating life (operations)	Travel (mm)
KSC321	2 ± 0.4	300,000	0.2 + 0.3/- 0
KSC341	3 ± 0.75	300,000	0.2 + 0.3/- 0
KSC351	5 ± 1	100,000	0.25 + 0.3/- 0

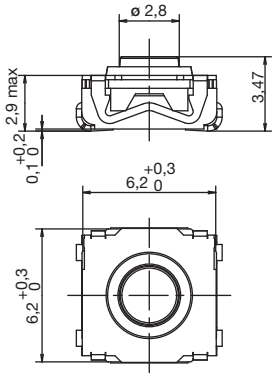

Packaging

Switches delivered on continuous tape & reels of 2,000 pieces
Dimensions according to EIA RS-481/ IEC 60286-3 standard
External diameter 330 ± 2 mm

How To Order

Our easy build-a-switch concept allows you to mix and match options to create the switch you need. To order, select desired option from each category and place it in the appropriate box.

However, please note that all the combinations of these options are not feasible.
For any part number different from those listed above, please consult your local representative.

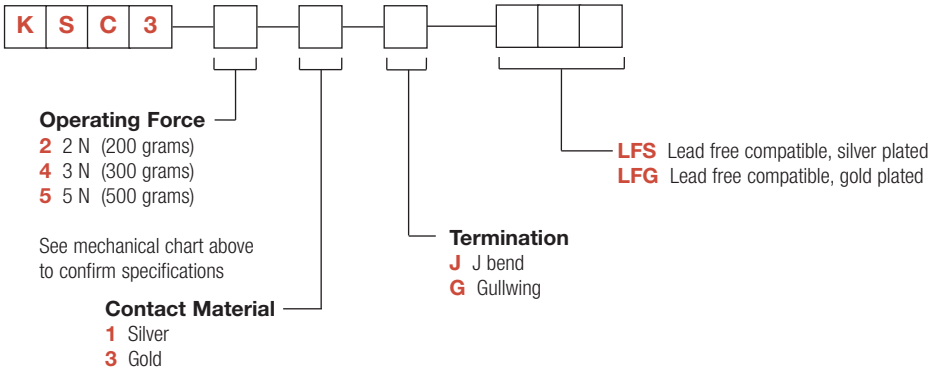

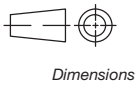

Dimensions are shown: mm
Specifications and dimensions subject to change

KSC4 Series
Sealed Tact Switch for SMT

KSC4 soft actuator 5,2 mm high

Type	Operating force FA (Newtons)	Operating life (operations)	Travel (mm)
KSC401 50SH	1.45 ± 0.55	5,000,000	0.5 ± 0.25
KSC411 70SH	1.4 ± 0.35	1,000,000	0.35 ± 0.20
KSC421 70SH	1.7 ± 0.45	300,000	0.5 ± 0.25
KSC422 70SH	1.7 ± 0.45	1,000,000	0.5 ± 0.25
KSC441 70SH	4 ± 1	300,000	0.75 ± 0.25
KSC442 70SH	4 ± 1	1,000,000	0.75 ± 0.25
KSC451 70SH	4.25 ± 0.75	300,000	0.8 ± 0.2
KSC441 SPD	3.5 ± 0.9	300,000	0.7 ± 0.2
KSC441 ST1	3.4 ± 1	300,000	0.7 ± 0.25
KSC441 ST2	3.4 ± 1	300,000	0.35 ± 0.20
KSC461 ST1	6.25 ± 1.75	100,000	1 ± 0.3
KSC461 ST2	6.25 ± 1.75	300,000	0.5 ± 0.2

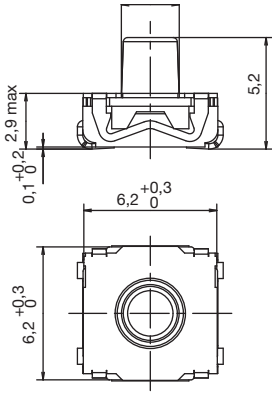

Packaging

Switches delivered on continuous tape & reels of 1,000 pieces
Dimensions according to EIA RS-481/ IEC 60286-3 standard
External diameter 330 ± 2 mm

How To Order

Our easy build-a-switch concept allows you to mix and match options to create the switch you need. To order, select desired option from each category and place it in the appropriate box.

However, please note that all the combinations of these options are not feasible.
For any part number different from those listed above, please consult your local representative.

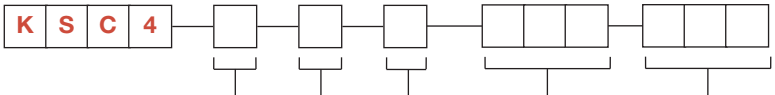

Operating Force
0 1.45 N (145 grams)
1 1.4N (140 grams)
2 1.7 N (170 grams)
4 4 N (400 grams)
5 4.25 N (425 grams)
6 6.25 N (625 grams)
See mechanical chart above to confirm specifications

Contact Material
1 Silver
2 Silver long life
3 Gold
4 Gold long life

Termination
J J bend
G Gullwing

50SH 50 shore **
70SH 70 shore ***
SPD Special delta version
ST1 High click
ST2 Low click

LFS Lead free compatible, silver plated
LFG Lead free compatible, gold plated

** applies to KSC401J50SH only
*** applies to KSC411J70SH, KSC421J70SH and KSC441J70SH

First Angle Projection

Dimensions are shown: mm
Specifications and dimensions subject to change

KSC5 hard actuator 5,6 mm high

Type	Operating force axial FA N (grams)	Operating force lateral FL N (grams) ±30%	Travel to make axial (mm)	Travel to make lateral (mm)	Life expectancy cycles, axial	Life expectancy cycles, lateral
KSC521	2 ± 0.5	1.2 - 2.6	0.25 ± 0.15	0.5 ± 0.25	100,000	10,000
KSC541	3 ± 0.75	1.8 - 3.8	0.25 ± 0.15	0.5 ± 0.25	100,000	10,000

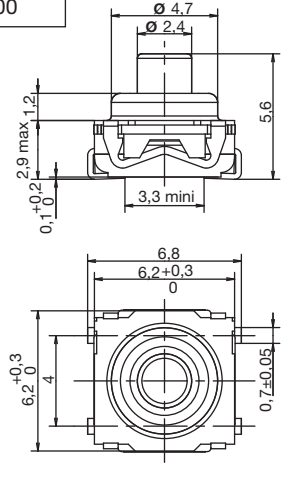

Packaging

Switches delivered on continuous tape & reels of 1,000 pieces, dimensions according to EIA RS-481/ IEC 60286-3 standard
External diameter 330 ± 2 mm

How To Order

Our easy build-a-switch concept allows you to mix and match options to create the switch you need. To order, select desired option from each category and place it in the appropriate box.

However, please note that all the combinations of these options are not feasible.
For any part number different from those listed above, please consult your local representative.

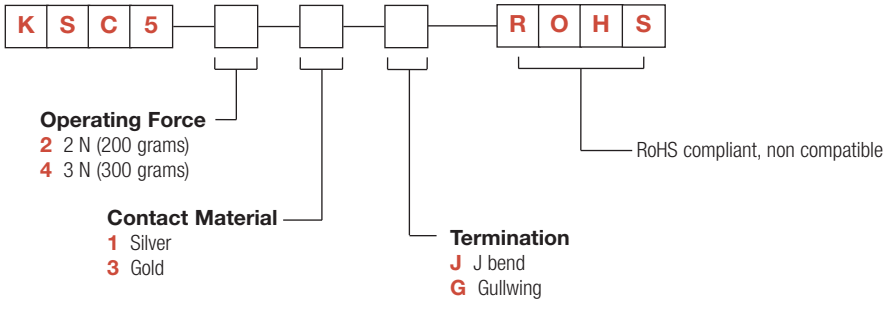

First Angle Projection

Dimensions are shown: mm
Specifications and dimensions subject to change

KSC6 Series
Sealed Tact Switch for SMT

KSC6 hard actuator 7,7 mm high

Type	Operating force FA (Newtons)	Operating life (operations)	Travel (mm)
KSC621	1.7 ± 0.5	300,000	0.4 ± 0.2
KSC631	2.55 ± 0.65	300,000	0.4 ± 0.2
KSC641	3.4 ± 0.85	300,000	0.4 ± 0.2

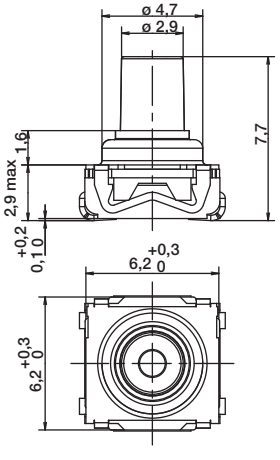

Packaging

Switches delivered on continuous tape & reels of 750 pieces
Dimensions according to EIA RS-481/ IEC 60286-3 standard
External diameter 330 ± 2 mm

How To Order

Our easy build-a-switch concept allows you to mix and match options to create the switch you need. To order, select desired option from each category and place it in the appropriate box.

However, please note that all the combinations of these options are not feasible.
For any part number different from those listed above, please consult your local representative.

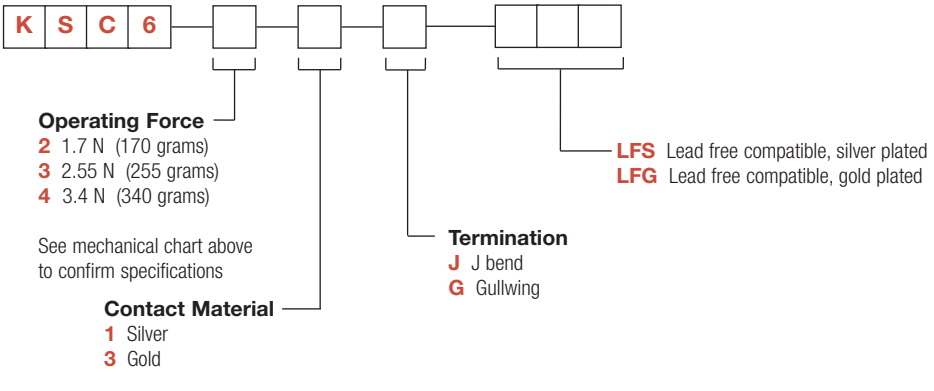

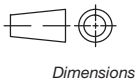

Dimensions are shown: mm
Specifications and dimensions subject to change

KSC7 soft actuator 4,3 mm high

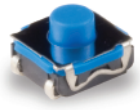

Type	Operating force FA (Newtons)	Operating life (operations)	Travel (mm)
KSC701	1.6 ± 0.6	5,000,000	0.3 ± 0.2
KSC721	2.25 ± 0.55	300,000	0.3 ± 0.15
KSC741	3.9 ± 1	300,000	0.4 ± 0.2

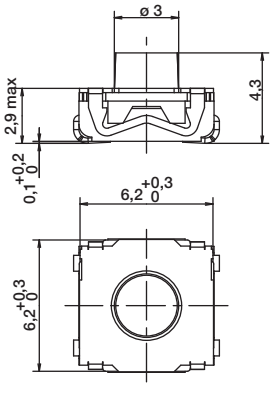

Packaging

Switches delivered on continuous tape & reels of 1,000 pieces
Dimensions according to EIA RS-481/ IEC 60286-3 standard
External diameter 330 ± 2 mm

How To Order

Our easy build-a-switch concept allows you to mix and match options to create the switch you need. To order, select desired option from each category and place it in the appropriate box.

However, please note that all the combinations of these options are not feasible.
For any part number different from those listed above, please consult your local representative.

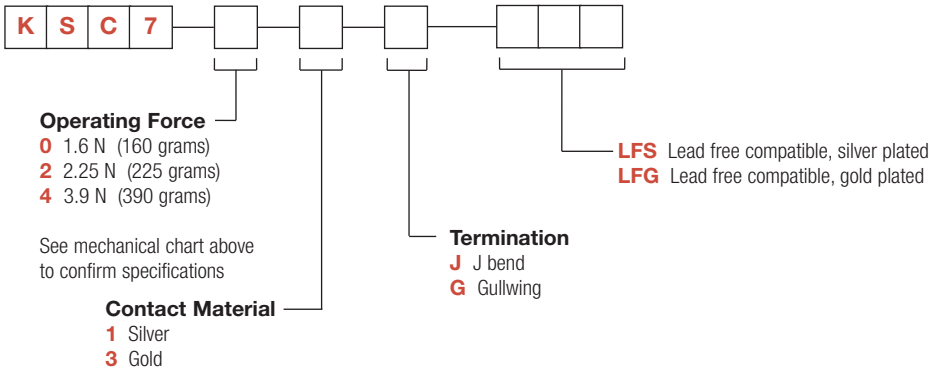

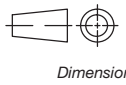

Dimensions are shown: mm
Specifications and dimensions subject to change

KSC8 Series
Sealed Tact Switch for SMT

KSC8 hard actuator 4,9 mm high

Type	Operating force FA (Newtons)	Operating life (operations)	Travel (mm)
KSC821	3.15 ± 0.75	300,000	0.65 ± 0.2
KSC821 OL	1.7 ± 0.5	300,000	0.4 ± 0.2
KSC831 OL	2.55 ± 0.65	300,000	0.4 ± 0.2
KSC841 OL	3.4 ± 0.85	300,000	0.4 ± 0.2

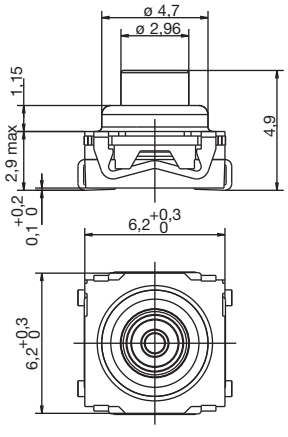

Packaging

Switches delivered on continuous tape & reels of 1,000 pieces
Dimensions according to EIA RS-481/ IEC 60286-3 standard
External diameter 330 ± 2 mm

How To Order

Our easy build-a-switch concept allows you to mix and match options to create the switch you need. To order, select desired option from each category and place it in the appropriate box.

However, please note that all the combinations of these options are not feasible.
For any part number different from those listed above, please consult your local representative.

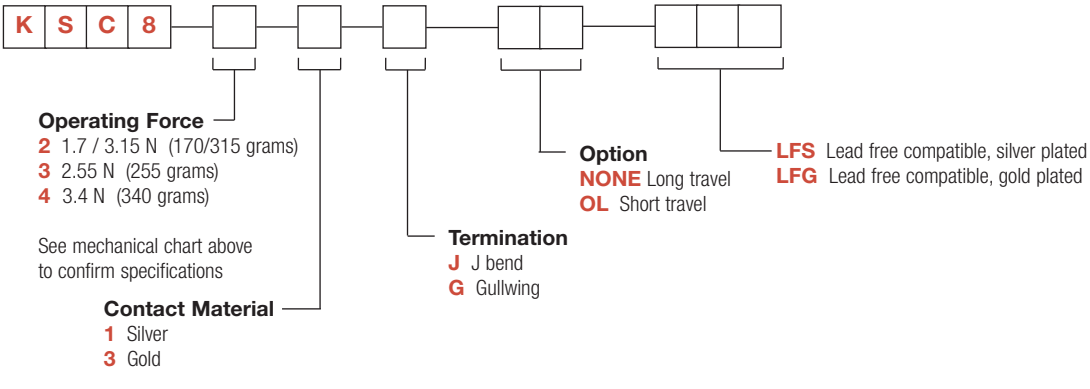

Dimensions are shown: mm
Specifications and dimensions subject to change

KSC9 hard actuator 7,7 mm high

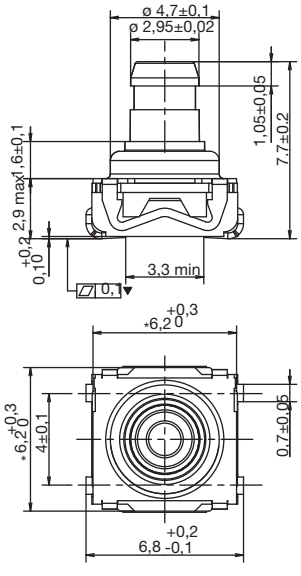

Type	Operating force FA (Newtons)	Operating life (operations)	Travel (mm)
KSC921	1.7 ± 0.5	300,000	0.4 ± 0.2
KSC931	2.25 ± 0.65	300,000	0.4 ± 0.2
KSC941	3.4 ± 0.85	300,000	0.4 ± 0.2

Packaging

Switches delivered on continuous tape & reels of 750 pieces
Dimensions according to EIA RS-481/ IEC 60286-3 standard
External diameter 330 ± 2 mm

How To Order

Our easy build-a-switch concept allows you to mix and match options to create the switch you need. To order, select desired option from each category and place it in the appropriate box.
For any part number different from those listed above, please consult your local representative.

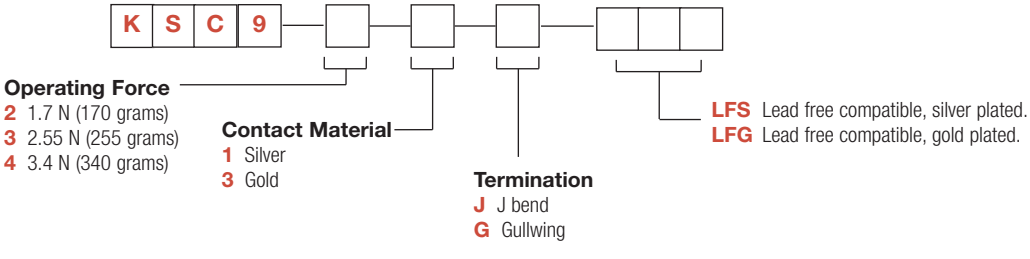

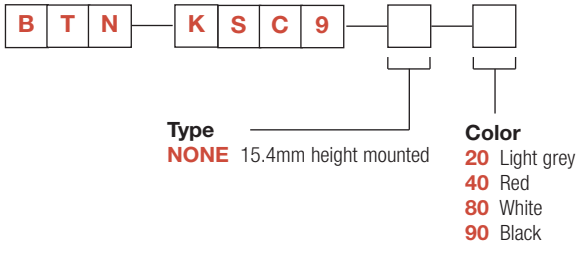

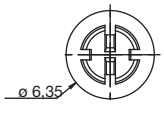

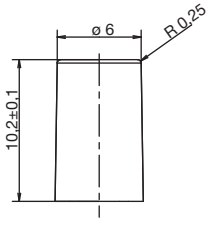

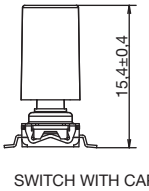

SWITCH WITH CAP

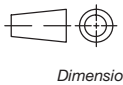

First Angle Projection

Dimensions are shown: mm
Specifications and dimensions subject to change

KSC10 Series
Sealed Tact Switches for SMT

KSC10 soft actuator 4,9 mm high

Type	Operating force FA (Newtons)	Operating life (operations)	Travel (mm)
KSC1001	1.45 ± 0.55	5,000,000	0.45 ± 0.25

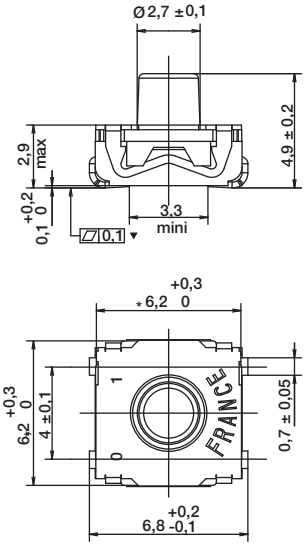

Packaging

Switches delivered on continuous tape & reels of 1,000 pieces
Dimensions according to EIA RS-481/ IEC 60286-3 standard
External diameter 330 ± 2 mm

How To Order

Our easy build-a-switch concept allows you to mix and match options to create the switch you need. To order, select desired option from each category and place it in the appropriate box.

However, please note that all the combinations of these options are not feasible.
For any part number different from those listed above, please consult your local representative.

K S C 10 — 0 — 1 — [ ] — L F S

Operating Force
0 1.45 N (145 grams)

See mechanical chart above to confirm specifications

Contact Material
1 Silver

Termination
J J bend
G Gullwing

LFS Lead free compatible, silver plated

Note: KSC10 offered with yellow actuator as standard, hardness 55 Shore

First Angle Projection

Dimensions are shown: mm
Specifications and dimensions subject to change

KSC4V2 Series
Side Actuated Sealed Tact Switch

Features/Benefits

- ***Full SMD side actuated***
- ***Haptic adaptability***
- ***Pin in paste terminations***
- ***Tape & reel***
- ***IP67***

Typical Applications

- ***Automotive***
- ***Industrial electronics***
- ***Network equipment***
- ***Telecommunications***

Specification

FUNCTION: momentary action
CONTACT ARRANGEMENT: 1 make contact = SPST, N.O.
TERMINALS:
2 pin in paste signal terminals
3 SMD ground terminals

Mechanical

Type	Force (N)	Operating Life (operations)	Travel (mm)
KSC441V2SPDLFS	3.5 ± 1.0	300,000	0.7 ± 0.2
KSC421V270SHLFS	1.55 ± 0.45	300,000	0.5 ± 0.2

NOTE: Basic version is based on KSC441V2 SPDELTA LFS.
Other configurations of haptics are available upon demand.

MISUSE OVERLOAD: 40N with back support
SHEAR FORCE:10N without back support

Electrical

	Silver	Gold
MAXIMUM POWER:	1 VA	0.2 VA
MAXIMUM VOLTAGE:	32 VDC	32 VDC
MINIMUM VOLTAGE:	20 mV	20 mV
MAXIMUM CURRENT:	50 mA	10 mA
MINIMUM CURRENT:	1 mA	0.1 mA

DIELECTRIC STRENGTH (50 Hz, 1 min.): ≥ 250 Vrms
CONTACT RESISTANCE: ≤ 100 mΩ
INSULATION RESISTANCE (100 V, initial stage): > 10^9 Ω
BOUNCE TIME: < 1 ms

Environmental

	Silver	Gold
OPERATING TEMPERATURE:	-40˚C to 85˚C	-40˚C to 125˚C
STORAGE TEMPERATURE:	-55˚C to 85˚C	-55˚C to 125˚C

Process

SOLDERING: Depending on the application, this component is suited to the following methods:

– Cleaning according to typical washing processes.
– Infrared Reflow Soldering in accordance with IEC 61760-1.

TERMINALS: pin in paste, silver or gold plated
TOP PLATE: tin plated
MSL level: 1
Vacuum pick head mandatory

Packaging

In reels of 500 pieces.
Dimensions of reels according to EIA RS481 or IEC 2863.
External diameter 330 mm ± 2 mm.

NOTE: This product is designed and manufactured for general electronic devices. For systems where reliability and safety are required, please contact your sales representative to secure product integration and function to secure usage.

How To Order

Our easy build-a-switch concept allows you to mix and match options to create the switch you need. To order, select desired option from each category and place it in the appropriate box.
For any part number different from those listed above, please consult your local representative.

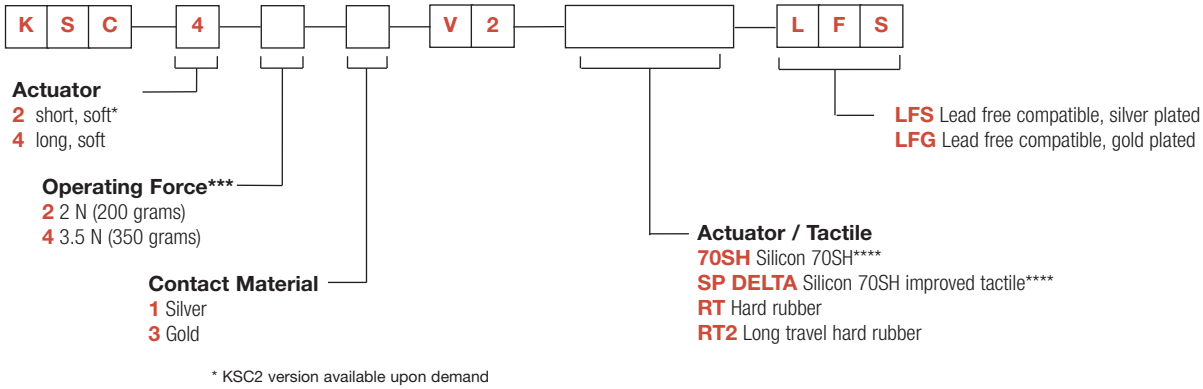

* KSC2 version available upon demand
*** Force available upon demand (variant version)
**** Available for KSC4 only

Dimensions are shown: mm
Specifications and dimensions subject to change

KSC4V2 Series
Side Actuated Sealed Tact Switch

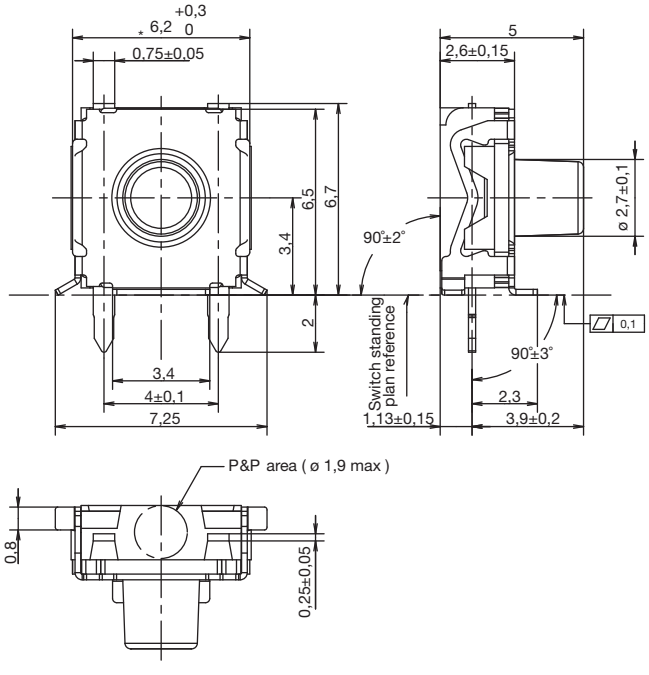

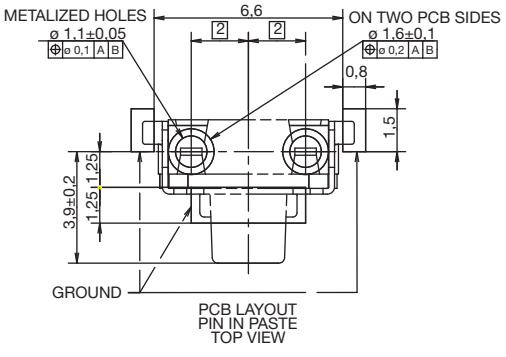

TAPE AND REEL

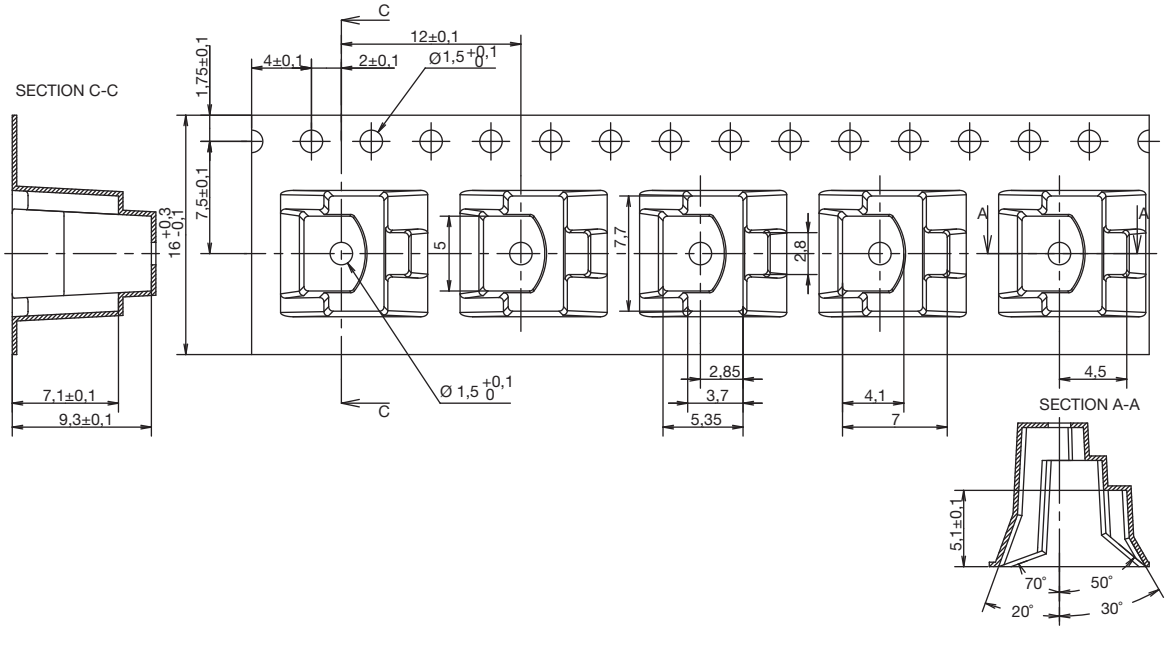

INTEGRATION

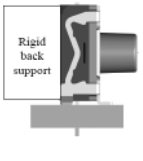

First Angle Projection

Dimensions are shown: mm
Specifications and dimensions subject to change

Features/Benefits

- *Low profile*
- *Cost efficient*
- *J or G terminations*
- *Tape and reel*
- *IP67*

Typical Applications

- *Smart meters*
- *Home appliances*
- *Consumer electronics*
- *Industrial electronics*
- *Telecommunications*

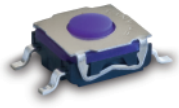

Specification

FUNCTION: momentary action
CONTACT ARRANGEMENT: 1 make contact = SPST, N.O.
TERMINALS: J bend & Gullwing type for SMT

Mechanical

Type	Operating Force FA (Newtons) Min. Max.	Operating Life Operations	Travel (mm)
KSEM31JLFS	1,6 ± 0,6	300,000	0,3 + 0,1/-0,2
KSEM31GLFS	1,6 ± 0,6	300,000	0,3 + 0,1/-0,2
KSEK43JLFS	2,25 ± 0,75	300,000	0,3 ± 0,2
KSEK43GLFS	2,25 ± 0,75	300,000	0,3 ± 0,2

NOTE: For cost effectiveness the tactile feeling is not specified and can change along production. If your application requires a defined tactile effect, please consider KSC series for your application.

Packaging

In reels of 2,000 pieces
Dimensions of reels according to EIA RS481 or IEC 2863.
External diameter 330 mm ± 2 mm.

Electrical

MAXIMUM POWER: 1 VA
MINIMUM/MAXIMUM VOLTAGE: 20 mV / 32 VDC
MINIMUM/MAXIMUM CURRENT: 1 mA /50 mA
DIELECTRIC STRENGTH: (50 Hz, 1 min.): ≥ 250 V
CONTACT RESISTANCE: ≤ 100 mΩ
INSULATION RESISTANCE: (100 V): ≥ 10^9 Ω
BOUNCE TIME: ≤ 1 ms

Environmental

OPERATING TEMPERATURE: -40˚C to 85˚C
STORAGE TEMPERATURE: -55˚C to 85˚C

Process

SOLDERING: Depending on the application, this component is suited to the following methods:
– Cleaning according to typical washing processes.
– Infrared Reflow Soldering in accordance with IEC 61760-1.

NOTE:
Specifications listed above are for switches with standard options. KSE series is not subject to adaptation and/or modification for specific use. If you require additional features, please refer to the KSC series. KSE is not recommended for applications requiring high level of performance such as aerospace, automotive and some industrial applications.

How To Order

Our easy build-a-switch concept allows you to mix and match options to create the switch you need. To order, select desired option from each category and place it in the appropriate box.

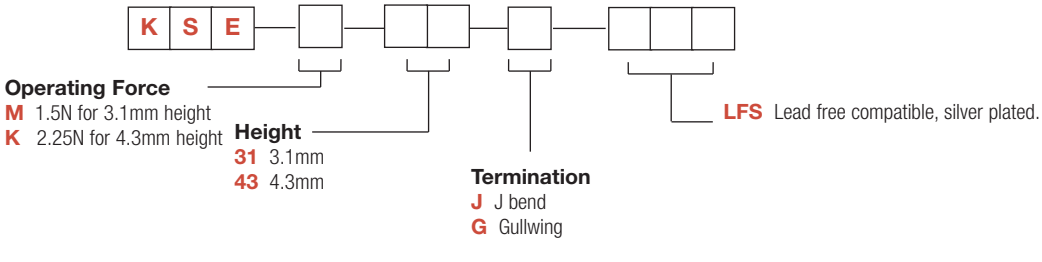

KSE Series
Low Profile Tact Switch

HEIGHT

31 3.1 MM HEIGHT

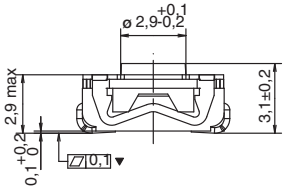

43 4.3 MM HEIGHT

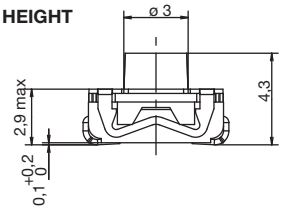

TERMINATION

G GULLWING

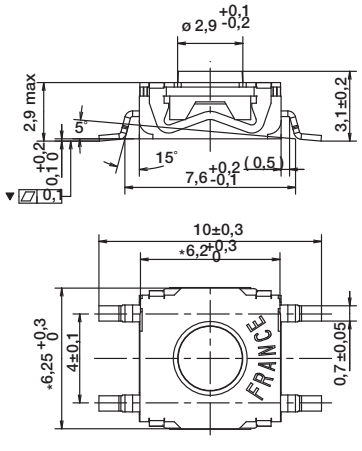

PAD LAYOUT

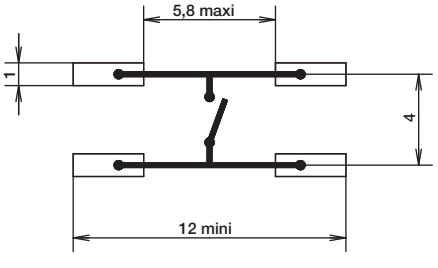

J J BEND

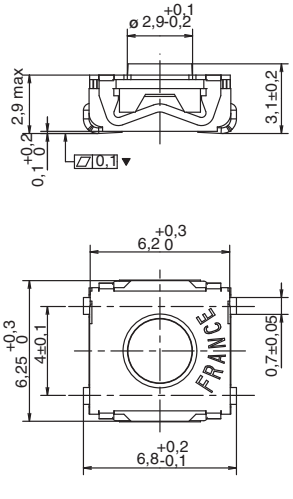

PAD LAYOUT

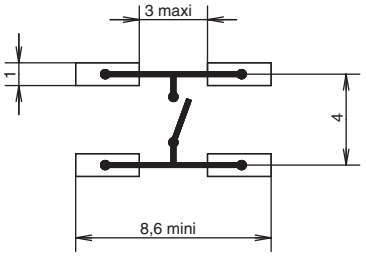

TAPE & REEL

12 mm height

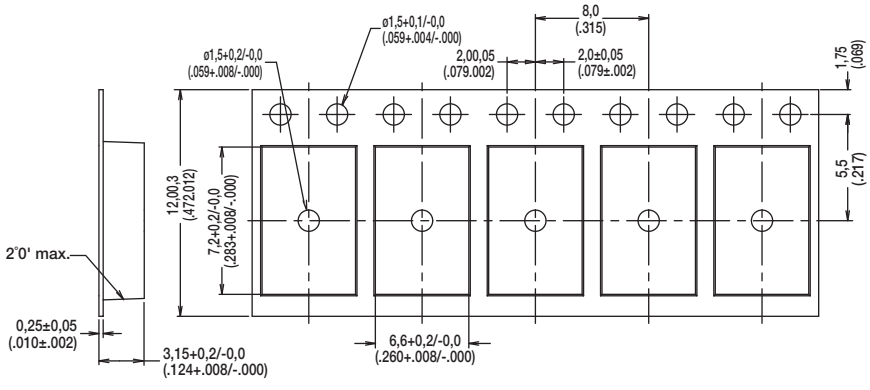

16 mm height

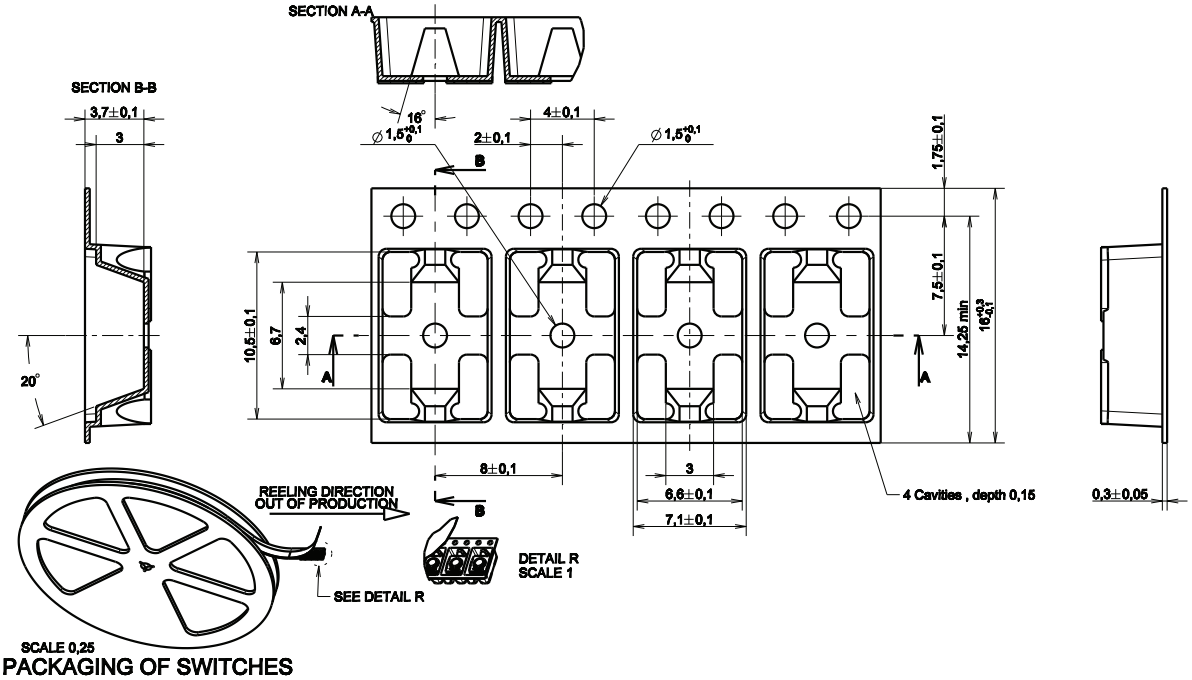

PACKAGING OF SWITCHES

KT Series
Full SMT Top & Side Actuated Sealed Tact Switch

Features/Benefits

- ***Full SMT side-actuated tact switch***
- ***SMT top-actuated tact switch with G or J terminations***
- ***High shear force with extended bracket***
- ***Easy to pick & place with top plate tab***
- ***Rubber or hard plastic actuator***
- ***Press fit or snap fit caps***
- ***RoHS compliant and compatible***

Typical Applications

- ***Telecommunications***
- ***Computer products***
- ***Instrumentation***
- ***Power supply***

Specification

CONTACT ARRANGEMENT: SPST, N.O.
TERMINALS: SMT termination

Electrical

CONTACT RATING: 1.0 VA max. @ 32 V AC or DC max.
ELECTRICAL & MECHANICAL LIFE: 100,000 make-and-break cycles at full load.
DIELECTRIC STRENGTH: 250 Vrms min. @ sea level.
CONTACT RESISTANCE: Below 50 mΩ typ. initial @ 2-4 V DC, 100 mA.
INSULATION RESISTANCE: 10^9 Ω min.

Environmental

OPERATING TEMPERATURES: Ag version: -40˚C to 90˚C
Au version: -40˚C to 125˚C

Process

SOLDERABILITY: Per MIL-STD-202F method 208D, or EIA RS-186E method 9 (1 hour steam aging).
DEGREE OF PROTECTION: IP57; protection against harmful dust deposits, full-scale voltage protection.

Packaging

Switches supplied in anti-static tape and reels per EIA 481-2. Tape and cover strip are conductive for use near statically sensitive components.

NOTE: Specifications listed above are for switches with standard options.
For information on specific and custom switches, consult Customer Service Center.

How To Order

Our easy build-a-switch concept allows you to mix and match options to create the switch you need. To order, select desired option from each category and place it in the appropriate box.

However, please note that all the combinations of these options are not feasible.
For any part number different from those listed above, please consult your local representative.

SWITCH

K T 1 1 — [ ][ ] — [ ][ ][ ][ ] — 3 — [ ] — [ ][ ][ ]

Actuator
B0* Soft, flush
B1* Soft, 0,64 mm
B2* Soft, 2,24 mm
P2** Hard, 2,36 mm
P3** Hard, 1,12 mm
P4** Hard, 3,96 mm
S1*** ø0,1" for Press Fit Caps
S2*** ø0,14" for Snap Fit Caps (with anti-rotation)

Orientation and Mounting Style
SM Top Gullwing
JM Top J Bend ****

SAM Right angle
SA1M Right angle with front solder pad
SA2M Right angle with front solder pad and pick & place tab
SA3M Right angle with pick & place tab

3

Contact Plating
4 Silver
5 Gold

Contact Plating
LFS RoHS compliant and compatible. Silver plated
LFG RoHS compliant and compatible. Gold plated

* B0, B1 & B2 available with A, A1 & A3 mounting bracket only.
** P2, P3, P4 actuators suitable with A1 & A2 mounting bracket only.
*** S1 & S2 available with A1 & A2 mounting bracket only.
**** JM available with B0, B1, B2, P2, P3, P4 without mounting bracket.

BUTTON

To order buttons in bulk

B T N — K T 1 1 — [ ][ ] — [ ][ ]

Button Style
02 Press fit
03 Snap fit, high temperature

Button Color
90 Black
80 Ivory (natural)
40 Red

Dimensions are shown: mm
Specifications and dimensions subject to change

SERIES

KT11

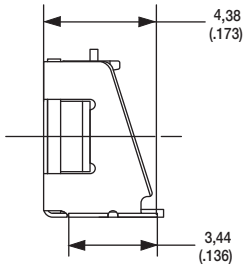

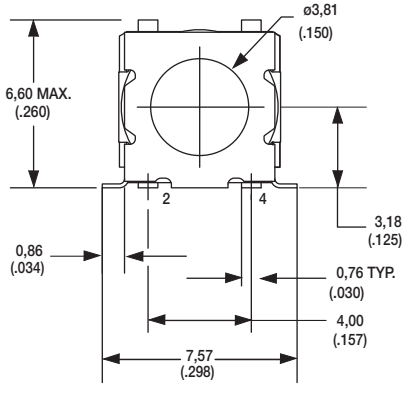

ACTUATOR

B0 SOFT, FLUSH*

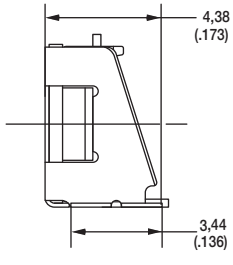

B1 SOFT, 0,64 mm*

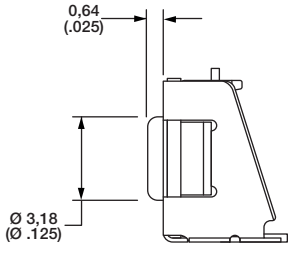

B2 SOFT, 2,24 mm*

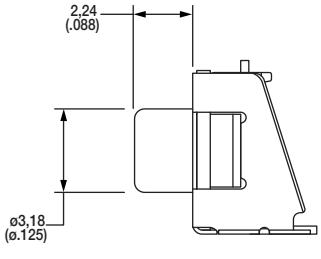

P2 HARD, 2,36 mm

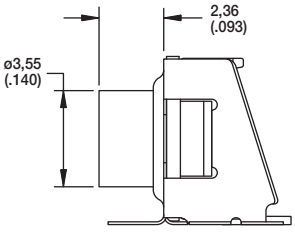

P3 HARD, 1,12 mm

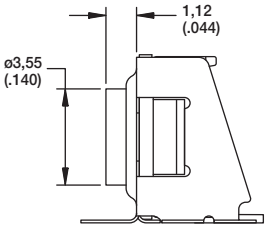

P4 HARD, 3,96 mm**

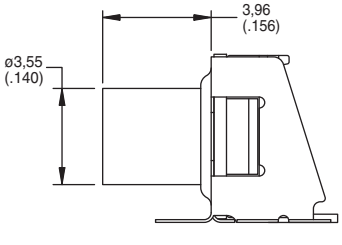

S1 Ø0,1" FOR PRESS FIT CAPS***

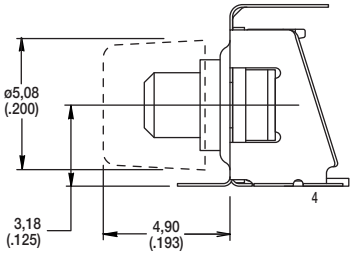

S2 Ø0,14" FOR SNAP FIT CAPS***

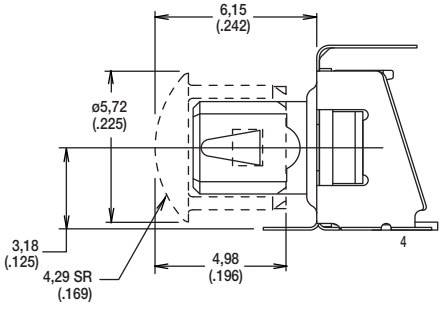

* B0, B1 & B2 available with A, A1 & A3 mounting bracket only.
** P2, P3, P4 actuators suitable with A1 & A2 mounting bracket only.
*** S1 & S2 available with A1 & A2 mounting bracket only.
**** JM available with B0, B1, B2, P2, P3, P4 without mounting bracket.

First Angle Projection

Dimensions are shown: mm
Specifications and dimensions subject to change

KT Series
Full SMT Top & Side Actuated Sealed Tact Switch

ORIENTATION & MOUNTING STYLE

SM TOP GULLWING

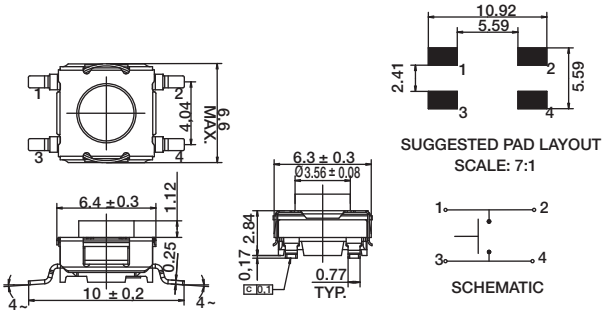

JM TOP J BEND

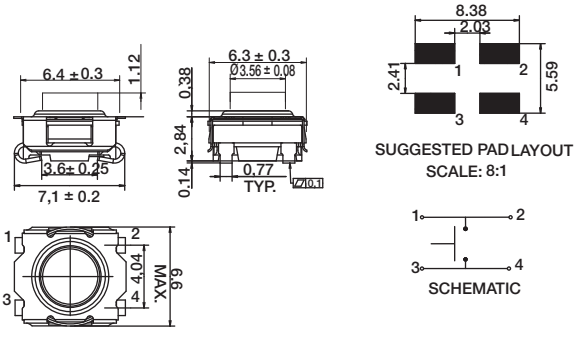

SAM RIGHT ANGLE

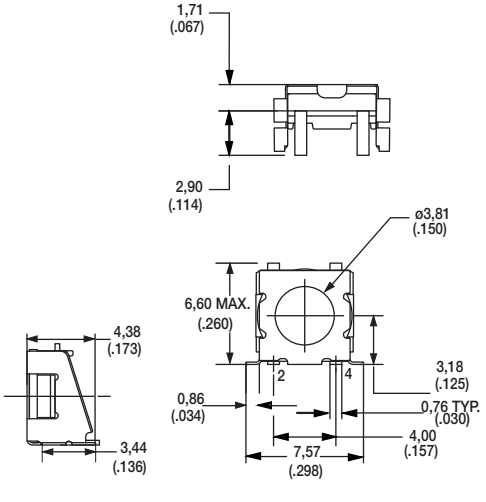

SA1M RIGHT ANGLE WITH FRONT SOLDER PAD

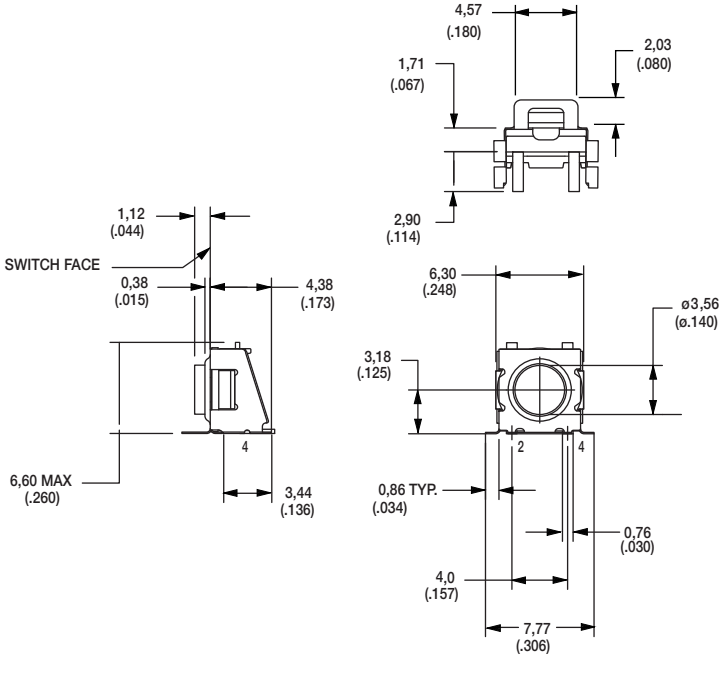

First Angle Projection

Dimensions are shown: mm
Specifications and dimensions subject to change

SA2M RIGHT ANGLE WITH FRONT SOLDER PAD AND PICK & PLACE TAB

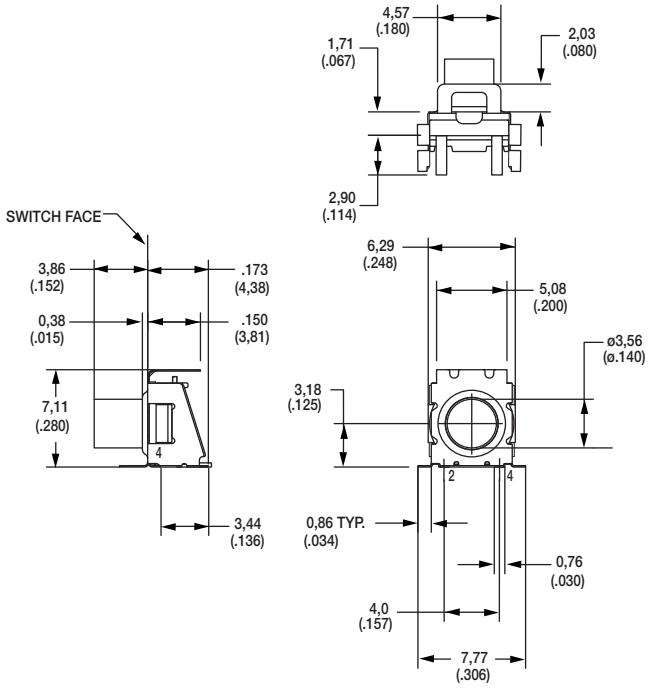

SA3M RIGHT ANGLE WITH PICK & PLACE TAB

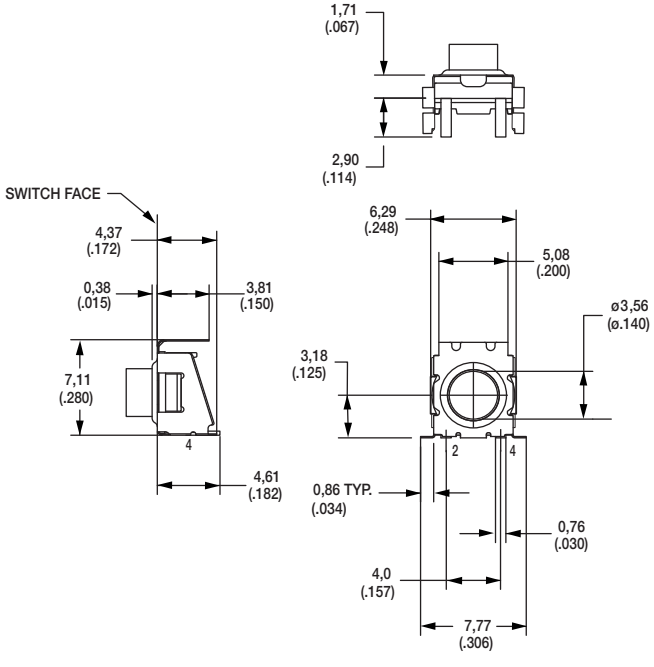

PAD LAYOUT
SA1M & SA2M MOUNTING BRACKET

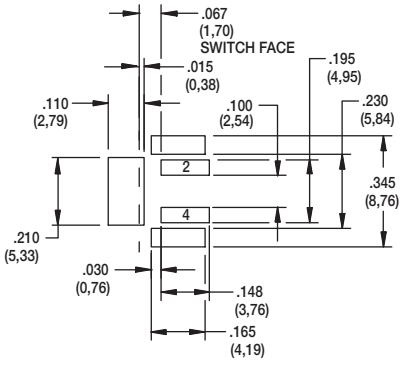

PAD LAYOUT
SAM & SA3M MOUNTING BRACKET

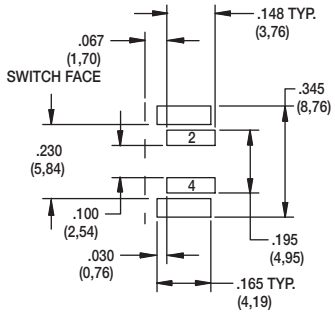

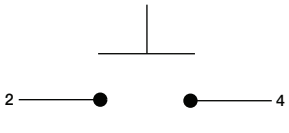

SCHEMATIC

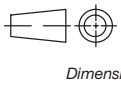

First Angle Projection

Dimensions are shown: mm
Specifications and dimensions subject to change

BUTTON

BUTTON

To order buttons in bulk

02 PRESS FIT

PART NUMBER	Internal Part Number	Button Color
BTN KT11 02 80	5081 01000	Ivory (Natural)
BTN KT11 02 90	5081 02000	Black
BTN KT11 02 40	5081 03000	Red

Materials: Nylon
Finish: Gloss

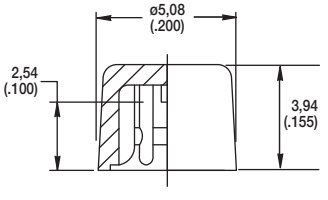

03 SNAP FIT, HIGH TEMPERATURE

PART NUMBER	Internal Part Number	Button Color
BTN KT11 03 80	685B 01000	Ivory (Natural)
BTN KT11 03 90	685B 02000	Black

Materials: Nylon
Finish: Gloss

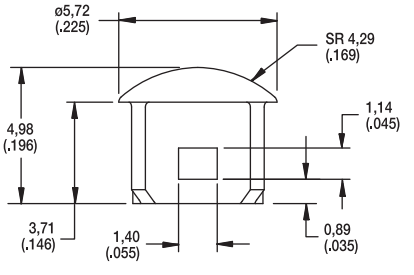

Features

- *High bright LED's*
- *Gold plated dome contact offering superior contact reliability in time*
- *Excellent ergonomics: sharp tactile feel and audible click*
- *Reduced space usage on board "2 in 1"*
- *40 N overload*
- *Tape and reel*
- *RoHS compliant and compatible*

Typical Applications

- *Application requiring illumination*
- *Server, storage*
- *Network infrastructure*
- *Telecom*
- *Medical*

Specification

FUNCTION: momentary action
CONTACT ARRANGEMENT: Normally Open
TERMINALS: SMT with positioning pegs;
SMT without positioning pegs is available, contact Customer Service

Mechanical

Type	Operating force FA[1] Newtons (grams)	Operating life (operations)	Travel (total travel) mm(mm)
K5AT WH 43GP	4.0 (400)	100,000	0,5 (0.8)

[1] Tolerances of operating force FA is ± 25%.

Packaging

Standard: 900 pcs per reel; Reel diameter 380 mm
Reduced: 180 pcs per reel; Reel diameter 180 mm

Electrical

POWER MIN/MAX: 0.02VA / 1.0VA
VOLTAGE MIN/MAX: 20mVdc – 32 Vdc
CURRENT MIN/MAX: 0.1mA – 100mA
CONTACT RESISTANCE: <100m Ω
INSULATION RESISTANCE: >1G Ω initial, >10M Ω after damp heat
BOUNCE TIME: <10ms

Environmental

OPERATING TEMPERATURE: -40˚C to 125˚C
STORAGE TEMPERATURE: -55˚C to 125˚C
RELATIVE HUMIDITY: 90 to 96% according to NF EN 60068-2-30
PROTECTION: dust protection and flux tight (IP 40)
OVERLOAD: 40N min

Process

SOLDERING: Compatible with the lead free soldering profile.
No washing

Materials

CONTACTS: Au over Ni
SOLDERING: Au over Ni
HOUSING: Thermoplastic UL94 V0

How To Order

Our easy build-a-switch concept allows you to mix and match options to create the switch you need. To order, select desired option from each category and and place it in the appropriate box.

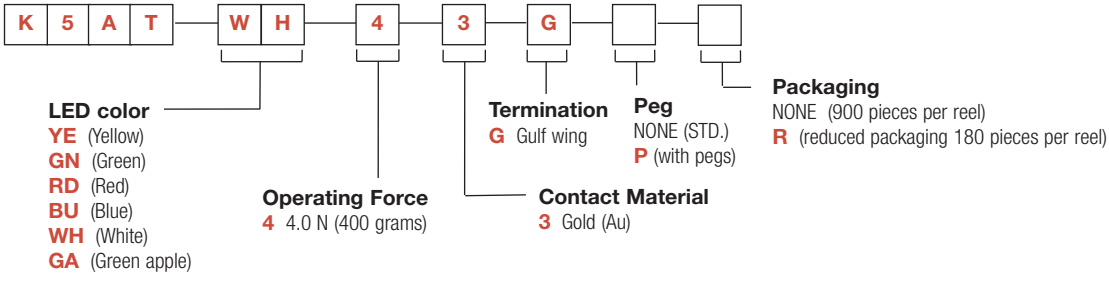

K5AT
Illuminated SMT Tact Switch

K5AT

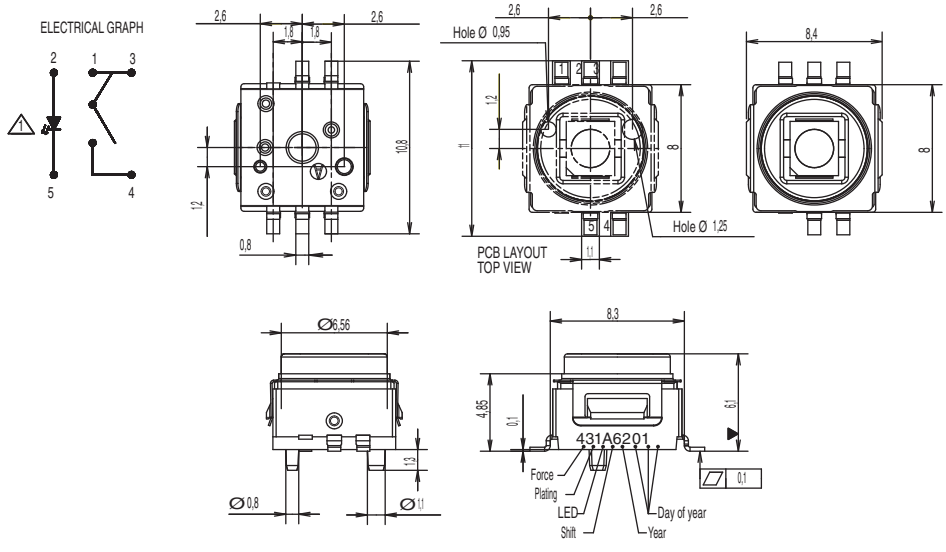

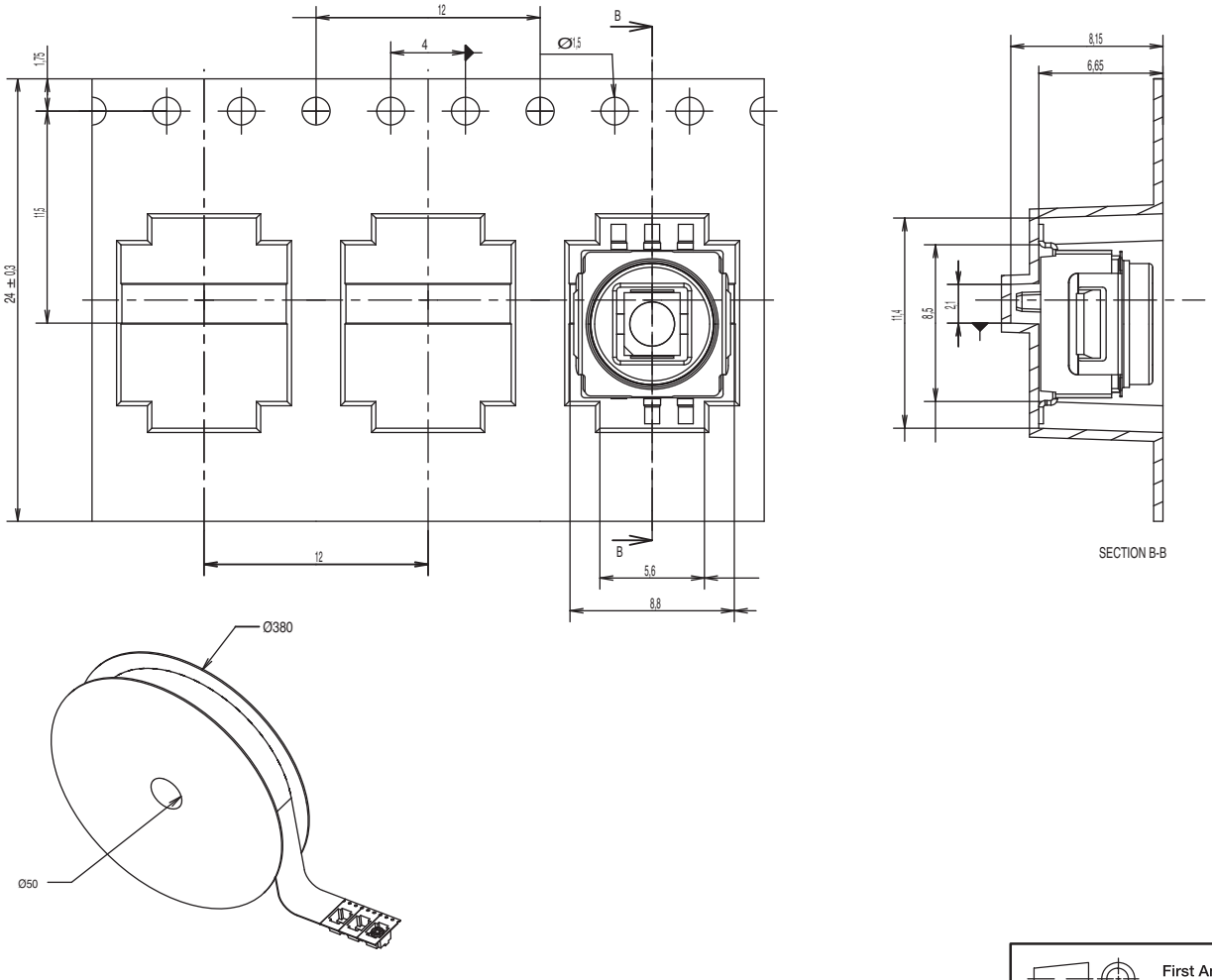

First Angle Projection

Dimensions are shown: mm
Specifications and dimensions subject to change

Lighted SMT Tact Switch with Rugged LED Mounting Process

Features

- *LED assembly without soldering*
- *Various LED options*
- *No light perturbation*
- *Sound haptic*
- *Various climatic classes*

Typical Applications

- *Automotive*
- *Network equipment*
- *Telecommunications*
- *Medical equipment*
- *Industrial controls*

Specification

FUNCTION: momentary action
CONTACT ARRANGEMENT: 1 make control = SPST, N.O.
TERMINALS: Gullwing type for SMT, peg as option, 2 terminals for LED

Mechanical

Type	Actuation Force (N)	Operating Life (operations)	Total Travel (mm)
K8xx41G LFS	4.0	300,000	0.45±0.15

Tolerances on actuation force is ± 0.25%.
SEALING LEVEL: IP40

Illumination Colors

White, blue, pure green, orange, super red
LED technical information available on product specification.
For any extra color, please contact your sales representative.

Packaging

In reels of 900 pieces under sealed foil.
Dimensions of reels according to EIA RS481 or IEC 2863.
External diameter 380 mm.

Electrical

	Silver	Gold
MAXIMUM POWER:	1.0 VA	0.2 VA
MAXIMUM VOLTAGE:	32 VDC	32 VDC
MINIMUM VOLTAGE:	20 mV	20 mV
MAXIMUM CURRENT:	50 mA	10 mA
MINIMUM CURRENT:	1 mA	0.1 mA

DIELECTRIC STRENGTH: (50 Hz, 1 min.) ≥ 250 Vrms
CONTACT RESISTANCE: < 100mΩ
INSULATION RESISTANCE: (100 V, inital stage) > $10^9\Omega$
BOUNCE TIME: < 10 ms

Environmental

OPERATING TEMPERATURE: -40˚C to +85˚C (Silver)
-40˚C to +125˚C (Gold)

STORAGE TEMPERATURE: -55˚C to +85˚C (Silver)
-40˚C to +125˚C (Gold)

Process

SOLDERING: Compatible with the lead free soldering profile.
No washing
MSL level: 5

NOTE:
The specifications show in the datasheet are for reference only and are not valid for design-in work. Please contact your sales representative to request drawings and product specifications.

For systems where reliability and safety are required, please contact your sales representative to secure product integration and function to secure usage.

How To Order

Our easy build-a-switch concept allows you to mix and match options to create the switch you need. To order, select desired option from each category and and place it in the appropriate box.

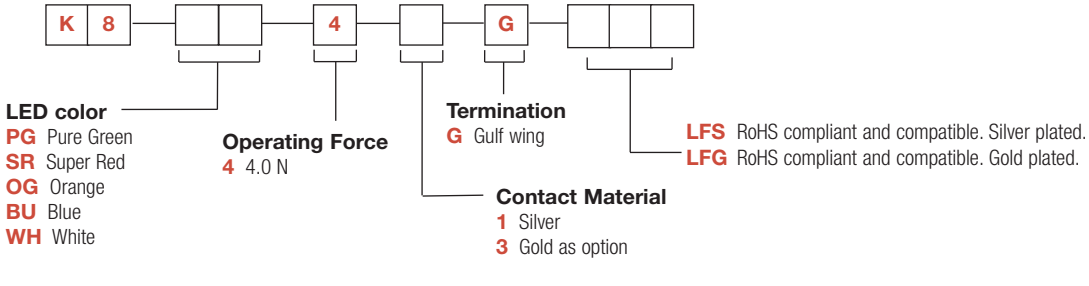

K8
Lighted SMT Tact Switch with Rugged LED Mounting Process

PART NUMBER	REF LED	EMITTED COLOR	LUMINOUS INTENSITY (mcd) If = 20 mA		CHROMATICITY COORDINATES OR PEAK WAVE LENGTH (typ) If = 20 mA		FORWARD VOLTAGE V If = 20 MA	
			min	typ	X	Y	min	max
K8WH41G	LW T67C-S2U1-5K8L	WHITE	224	560	0,33	0,33	3	4.1
K8BU41G	LB T67C-P2R1-35	BLUE	56	140	465 nm		3	4.1
K8PG41G	LP T676-L1M2-25	PURE GREEN	11.2	28	562 nm		1.8	2. 4
K8SR41G	LP T676-Q1R2-1	SUPER RED	71	180	645 nm		1.8	2.3
K8OG41G	LO T676-R1S2-24	ORANGE	112	280	610 nm		1.85	2.35

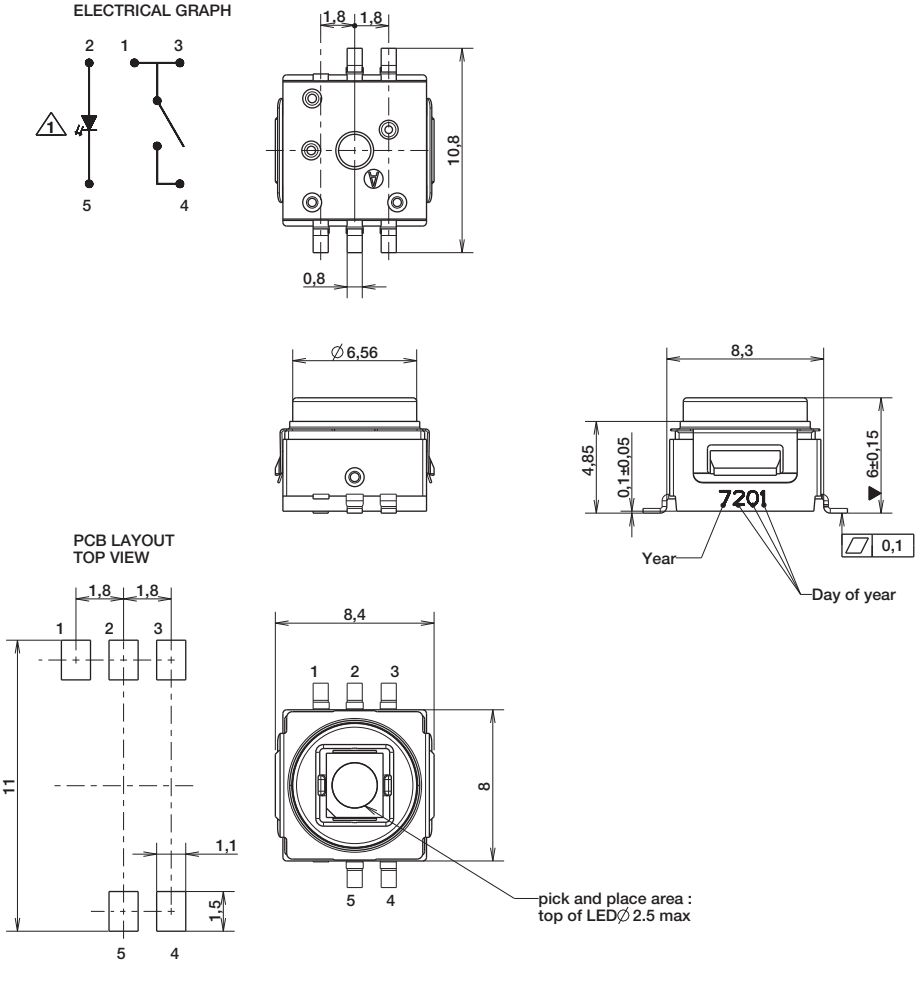

First Angle Projection

Dimensions are shown: mm
Specifications and dimensions subject to change

TAPE & REEL

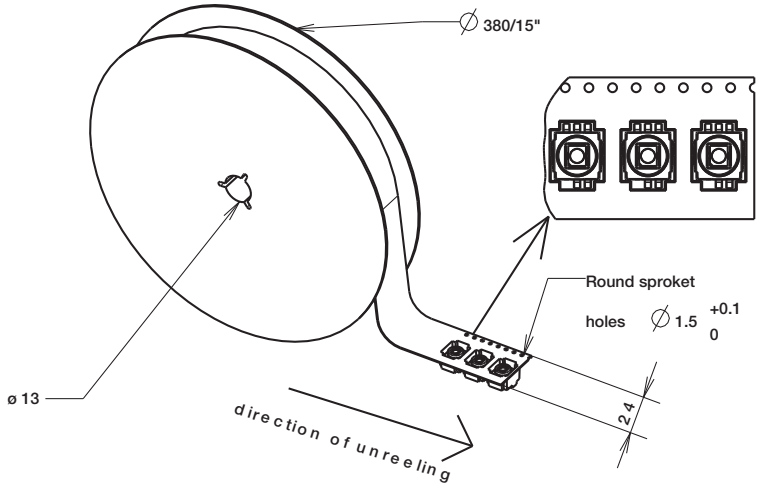
∅ 380/15"
Round sproket
holes ∅ 1.5 +0.1 0
ø 13
direction of unreeling
2.4

K5V
Illuminated Tact Switch

Features

- *Gold plated dome contact SPST/SPDT*
- *Excellent ergonomics*
- *High bright leds*
- *Reduced space usage on board*
- *40 N overload*
- *Tape and reel*
- *RoHS compliant and compatible*

Typical Applications

- *When backlighting and switch are required to be a "2 in 1" component*
- *The dome contact secures a superior contact reliability in time*
- *The ergonomics of K5V provides a long travel, a sharp tactile feel and an audible click*
- *Server, storage, automotive, network infrastructure, medical*

Specification

FUNCTION: momentary action
CONTACT ARRANGEMENT: Normally Open + Normally Closed
TERMINALS:
THT: Through hole terminals with positioning pegs
SMT: Surface mount terminals with positioning pegs
PM: Panel mount solder terminals with wire hole

Mechanical

Version	Operating force FA[1] Newtons (grams)	Operating life (operations)	Travel (total travel) mm(mm)
THT, SMT, PM	4.0 (400)	25,000	1.2 (2.4)

[1] Tolerances of operating force FA is ± 25%.

Packaging

THT:
60 pieces per tray; 1800 pieces per box
SMT:
330 pieces per reel (reel ø 360mm); 1320 pieces per box
PM:
60 pieces per tray; 2100 pieces per box

Electrical

POWER MIN/MAX: 0.02VA / 1.0VA
VOLTAGE MIN/MAX: 20mVdc – 32 Vdc
CURRENT MIN/MAX: 0.1mA – 100mA
CONTACT RESISTANCE: <150m Ω
INSULATION RESISTANCE: >1G Ω initial, >10M Ω after damp heat
BOUNCE TIME: <5ms

Environmental

OPERATING TEMPERATURE: -40˚C to 85˚C
STORAGE TEMPERATURE: -50˚C to 85˚C
RELATIVE HUMIDITY: 90 to 96% according to NF EN 60068-2-30
PROTECTION: dust protection and flux tight
OVERLOAD: 40N min

Process

SMT
Soldering: Compatible with the lead free soldering profile
No washing
THT
Soldering: Compatible with the lead free soldering profile
No washing
PM
Soldering: Low wattage soldering iron (25-50 watts max).
Solder time 3 seconds max. No washing

Materials

LEAD FREE
CONTACTS: Au over Ni
SOLDERING: Au over Ni
HOUSING: Thermoplastic UL94 V0

How To Order

Our easy build-a-switch concept allows you to mix and match options to create the switch you need. To order, select desired option from each category and and place it in the appropriate box.

K 5 V [ ] [ ][ ] 4 3 [ ] [ ][ ]

Actuator
1 without snap-in, clear (THT and PM version only)
2 with snap-ins, clear for light pipe extension (THT and PM version only)
4 without snap-in, light grey (SMT version only)
5 with snap-ins, light grey for light pipe extension (SMT version only)

Actuator color/LED color
BA Translucid/Blue-Amber
GN Translucid/Green
BU Translucid/Blue
RD Translucid/Red
RG Translucid/Red-Green
WH Translucid/White
WL Translucid/White (low luminosity)
YE Translucid/Yellow
YG Translucid/Yellow-Green
CL Transparent/No LED
90 Black Actuator/No LED

Operating Force
4 4.0 N (400 grams)

Contact Material
3 Gold (Au)

Termination
G Surface mount
P Panel mount
T Through-hole 3.5mm
S Through-hole 2.1mm

Option
NONE No option
P3 Terminal 3 is cut
P4 Terminal 4 is cut
P13 Terminal 1 & 3 is cut
P14 Terminal 1 & 4 is cut

Dimensions are shown: mm
Specifications and dimensions subject to change

K5V SMT

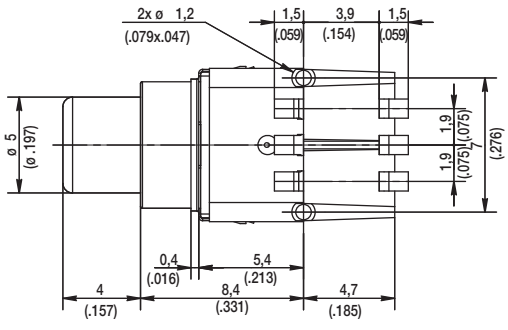

ELECTRICAL DIAGRAM

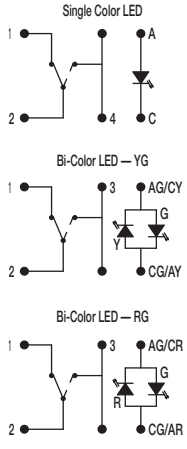

RECOMMENDED PCB LAYOUT (WITH HOLES)

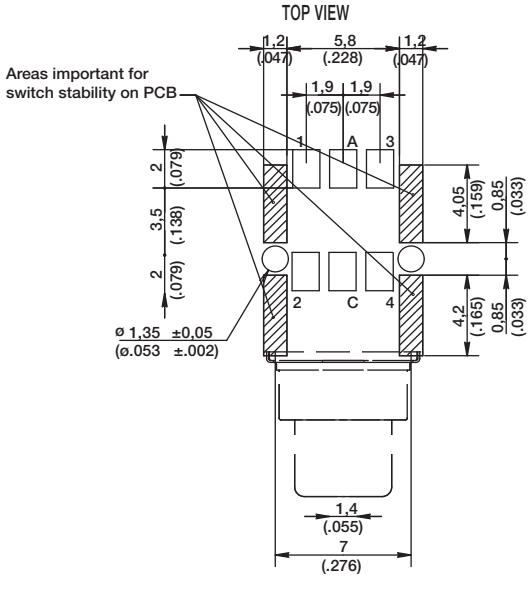

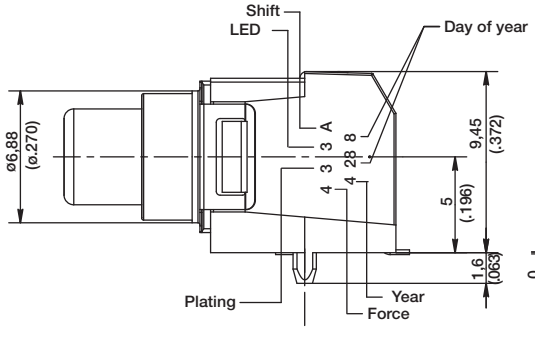

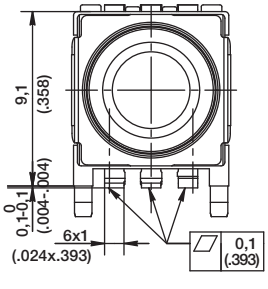

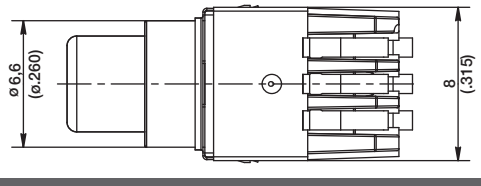

TAPE & REEL

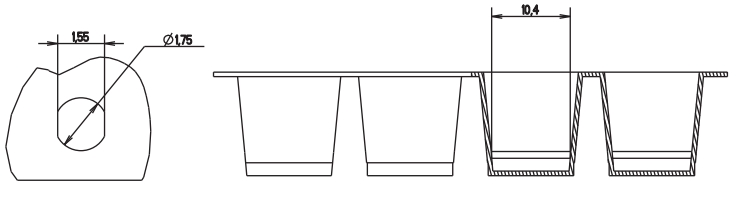

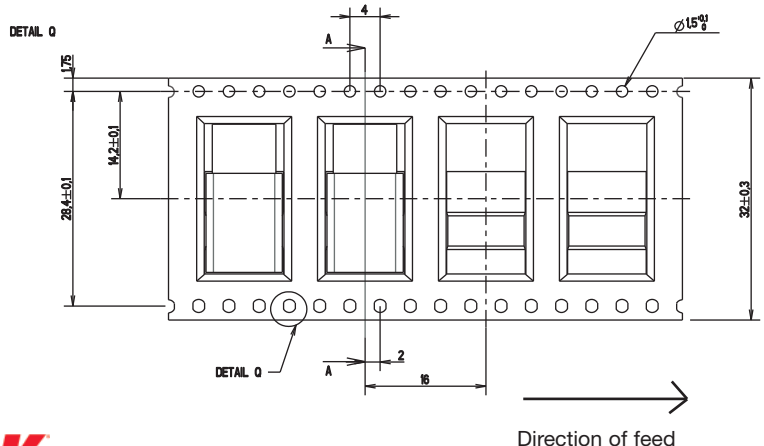

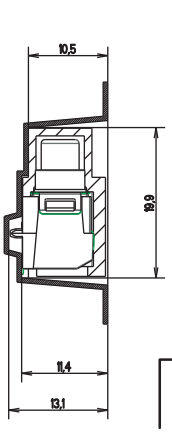

Direction of feed

First Angle Projection

Dimensions are shown: mm
Specifications and dimensions subject to change

K5V
Illuminated Tact Switch

K5V THT

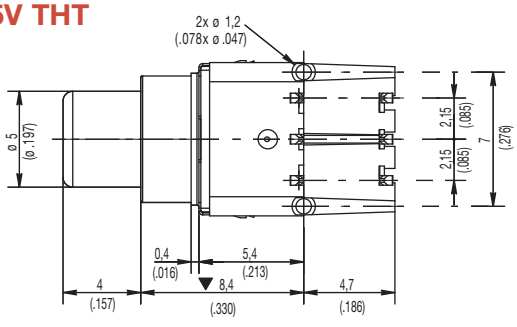

ELECTRICAL DIAGRAM

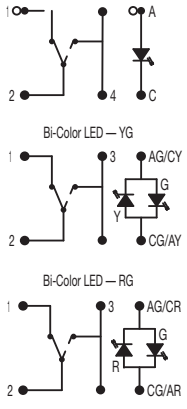

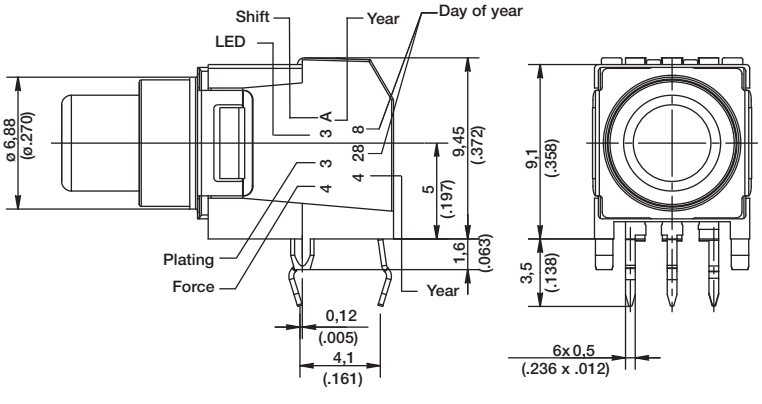

RECOMMENDED PCB LAYOUT (WITH HOLES)

TOP VIEW

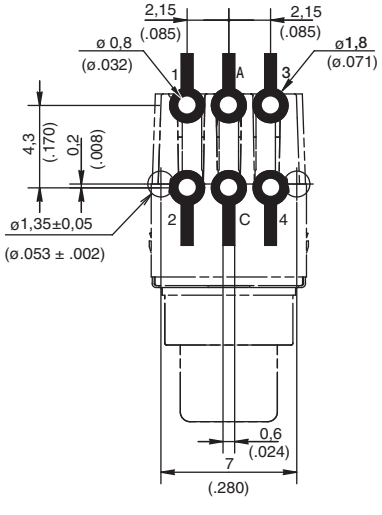

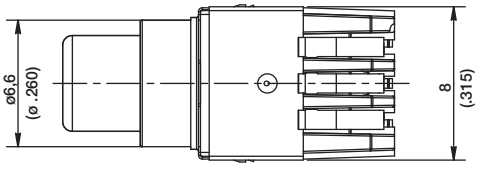

TRAY

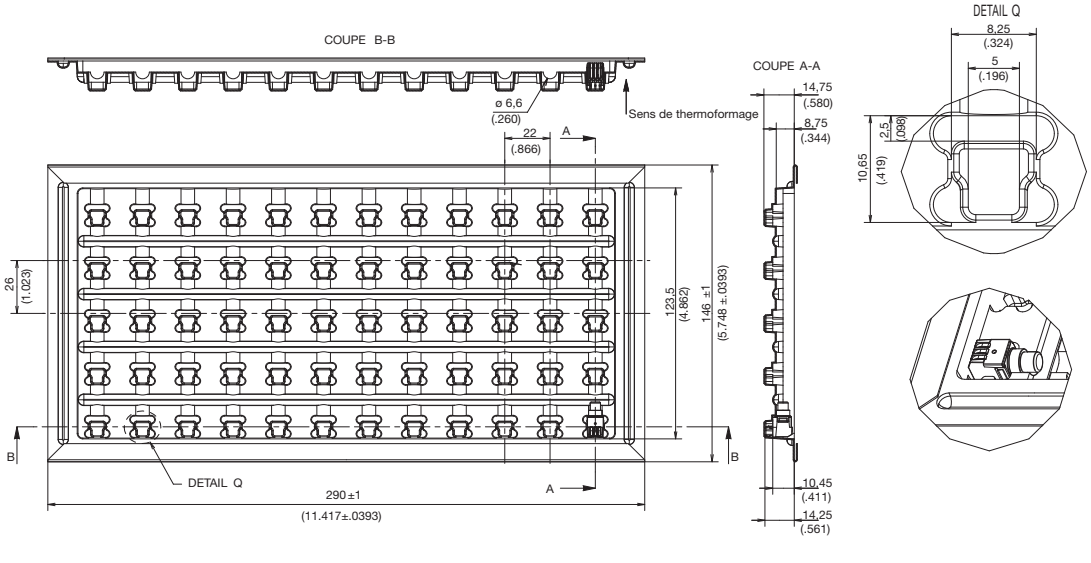

K5V PM

ELECTRICAL DIAGRAM

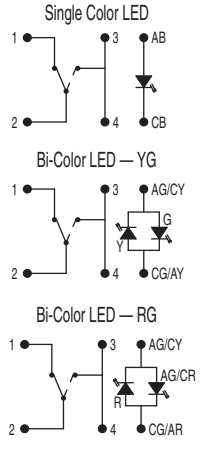

TERMINAL REFERENCES

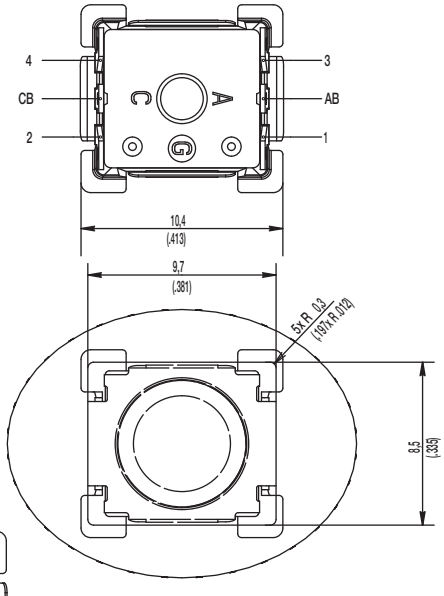

PRODUCT IDENTIFICATION AND DATE CODES

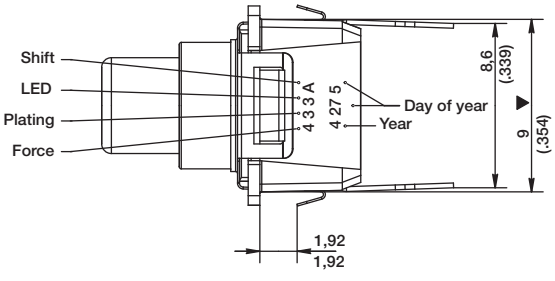

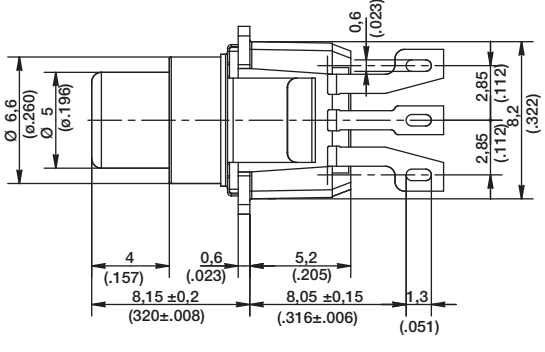

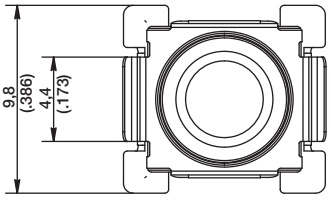

TRAY

SUITABLE FOR PANEL THICKNESS OF 1.8MM MAX

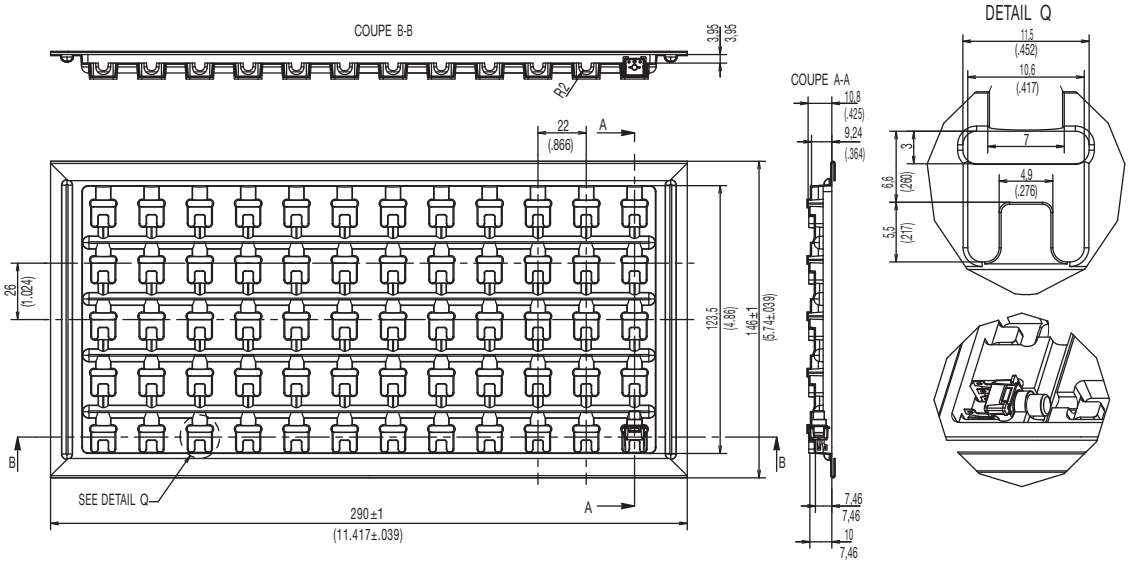

KSF & KSFI Series
Soft Actuated Tact Switch

Features/Benefits

- ***Soft actuated switch***
- ***Sealed front end***
- ***Top and side actuated***

Typical Applications

- ***Low profile keyboards***
- ***Automotive interfaces***
- ***Industrial control***

Specification

FUNCTION: momentary action
CONTACT ARRANGEMENT: 1 make conact = SPST, N.O.
TERMINALS: THT pins

Mechanical

Type	Force (N)	Operating life (operations)	Travel (mm)
KSF0M211LFTR	1.5 ± 0.5	100,000	0.25 ± 0.1
KSF0M311LFTR	1.9 ± 0.5	100,000	0.25 ± 0.1
KSF0M411LFTR	3.0 ± 0.75	100,000	0.25 ± 0.1
KSF0M511LFTR	5.2 ± 1.0	100,000	0.25 ± 0.1
KSFI0V91170SH LFTR	3.4 ± 1.5	100,000	0.65 ± 0.25
KSF0M212 LFT	1.6 ± 0.4	300,000	0.25 ± 0.1
KSFI0M412 70SHLFT	3.2 ± 0.8	100,000	0.75 ± 0.25

Overload resistance: 40N, 1 time
Sealing: IP60 or IP67

NOTE: Other configurations of haptics and terminals are available upon demand. Please also refer to KSF and KSFI Mk2 catalogues pages for other options.

This product is designed and manufactured for general electronic devices. For systems where reliability and safety are required, please contact your sales representative to secure product integration and function to secure usage.

Electrical

	Silver	Gold
MAXIMUM POWER:	1 VA	0.2 VA
MAXIMUM VOLTAGE:	32 VDC	32 VDC
MINIMUM VOLTAGE:	20 mV	20 mV
MAXIMUM CURRENT:	50 mA	10 mA
MINIMUM CURRENT:	1 mA	1 mA

DIELECTRIC STRENGTH (50 Hz, 1 min.): > 250 Vrms
CONTACT RESISTANCE: < 100 m Ω
INSULATION RESISTANCE (100 V, initial stage): > 10^9 Ω
BOUNCE TIME: < 1 ms

Environmental

	Silver	Gold
OPERATING TEMPERATURE:	-40˚C to 85˚C	-40˚C to 125˚C
STORAGE TEMPERATURE:	-55˚C to 85˚C	-40˚C to 125˚C

Process

SOLDERING

Packaging

In boxes of 250 pieces (V type) or 500 pieces (M type).

How To Order

Our easy build-a-switch concept allows you to mix and match options to create the switch you need. To order, select desired option from each category and place it in the appropriate box.

However, please note that all the combinations of these options are not feasible.
For any part number different from those listed above, please consult your local representative.

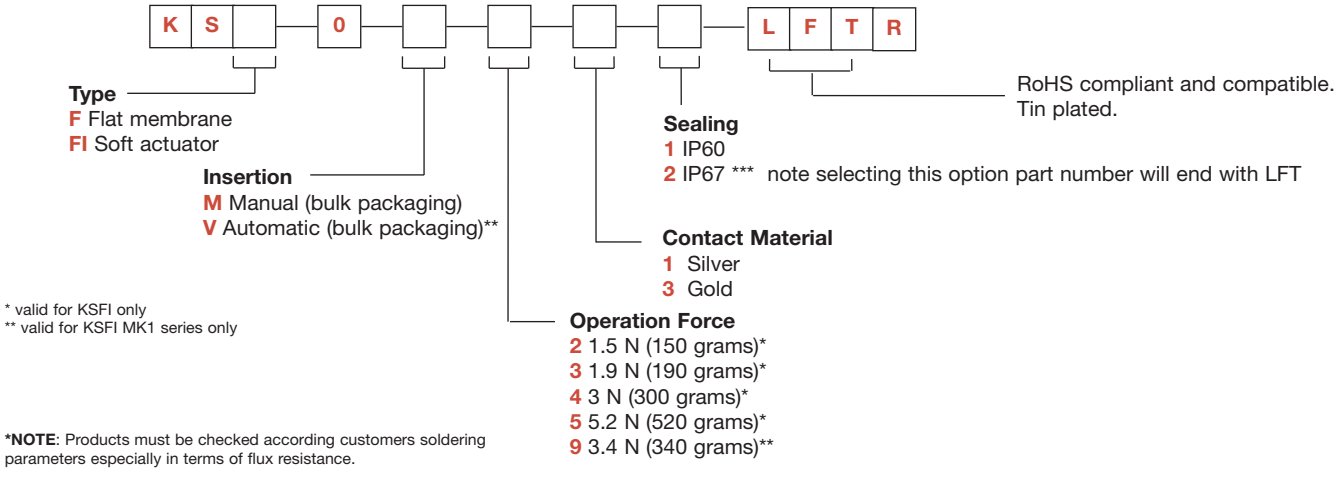

* valid for KSFI only
** valid for KSFI MK1 series only

***NOTE**: Products must be checked according customers soldering parameters especially in terms of flux resistance.

KSF

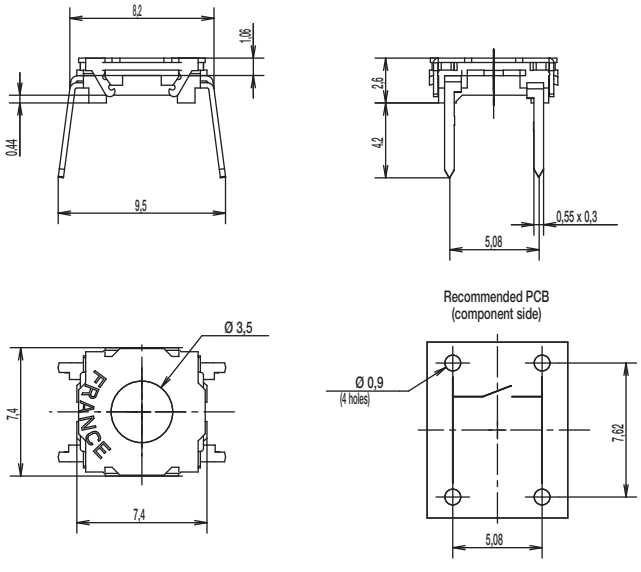

KSFI 0V

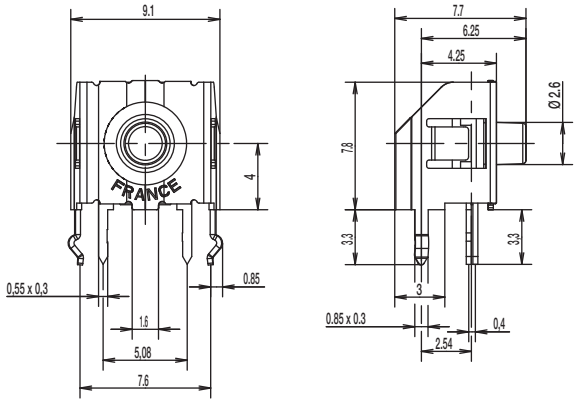

First Angle Projection

Dimensions are shown: mm
Specifications and dimensions subject to change

KSA & KSL Series
Sealed Tact Switch

Features/Benefits

- *Designed for automatic or manual insertion*
- *Cambered terminals to ensure self retention*
- *Top or side actuated*
- *Large choice of caps*
- *RoHS compliant and compatible*

Typical Applications

- *Automotive*
- *Industrial*
- *Telecommunication networks*

Specification

CONTACT ARRANGEMENT: SPST, N.O.
DOUBLE OVERMOLDING ON TERMINAL
SEALING: IP60
TERMINALS: PC pins, ground pin optional

Mechanical

Type	Actuation force N	Operating life (operations)	Travel to make
KSA0M211	1,4 ± 0,4	100,000	0,5 ± 0,2
KSA0M311	1,4 ± 0,4	1,000,000	0,5 ± 0,2
KSA0M411	3 ± 0,75	100,000	0,6 ± 0,2
KSA0M511	5 ± 1,5	100,000	0,7 ± 0,2
KSA0M911	3 ± 0,75	500,000	0,6 ± 0,2
KSL0M211	1,4 ± 0,4	100,000	0,5 ± 0,2
KSL0M311	1,4 ± 0,4	1,000,000	0,5 ± 0,2
KSL0M411	3 ± 0,75	100,000	0,6 ± 0,2
KSL0M511	5 ± 1,5	100,000	0,7 ± 0,2
KSL0M911	3 ± 0,75	500,000	0,6 ± 0,2

NOTE: Other versions in terms of force, termination length and corrosion protection available. Please contact your sales representative.
This data sheet does not provide enough information for applications which require a certain level of quality or safety such as automotive, medical systems, safety equipment. Please contact your sales representative to get contractual specification package.

Electrical

	Silver	Gold
MAXIMUM POWER:	1 VA	0.2 VA
MAXIMUM VOLTAGE:	32 VDC	32 VDC
MINIMUM VOLTAGE:	20 mV	20 mV
MAXIMUM CURRENT:	50 mA	10 mA
MINIMUM CURRENT:	1 mA	1 mA

DIELECTRIC STRENGTH: 250 Vrms
CONTACT RESISTANCE: ≤ 100m Ω
INSULATION RESISTANCE (100 V): ≥ 10^9 Ω
BOUNCE TIME: ≤ 1 ms

Environmental

	Silver	Gold
OPERATING TEMPERATURE:	-40˚C to 85˚C	-40˚C to 125˚C
STORAGE TEMPERATURE:	-40˚C to 85˚C	-55˚C to 125˚C

Process

Wave soldering compatible with lead free soldering profile.

Packaging

Can be delivered in tubes of 65 pieces for automatic insertion or in boxes of 500 pieces for manual insertion (250 pieces for KSL, KSLV, KSAV).

How To Order

Our easy build-a-switch concept allows you to mix and match options to create the switch you need. To order, select desired option from each category and place it in the appropriate box.

However, please note that all the combinations of these options are not feasible.
For any part number different from those listed above, please consult your local representative.

SWITCH K S [ ] [ ] [ ] [ ] [ ] 1 L F T R

Actuator Type
A Short hard plastic
L Long hard plastic

Ground Terminal
0 Without
1 With*

Insertion
M Manual (bulk packaging)
A Automatic (tube packaging)
V Vertical (bulk packaging)*

Contact Material
1 Silver contacts
3 Gold contacts

Operation Force
2 1.3 N (130 grams), 100,000 operations
3 1.3 N (130 grams), 1,000,000 operations
4 3 N (300 grams), 100,000 operations
5 5 N (500 grams), 100,000 operations
9 3 N (300 grams), 500,000 operations

RoHS compliant and compatible. Tin plated.

***Note:** "1" Ground terminal not compatible with "V" insertion

BUTTONS Buttons must be ordered separately and will be supplied in bulk.

B T N K 0 [ ] [ ] [ ]

Button Style
K01 10 mm square snap-on
K02 ø8 mm round snap-on
K03 8,5 x 3,8 mm single floating
K04 18,5 x 3,8 mm double floating
K05 5 mm square
K06 10 x 2,5 mm snap-on handle
K07 5 mm square
K08 9,9 x 5 mm rectangular
K09 ø6,2 mm round

Button Color
10 Dark gray
20 Light gray
30 Yellow
40 Red
50 Green
60 Blue
70 Gray-blue
80 Ivory
90 Black

***NOTE**: Please note that all buttons are not RoHS compliant. Please check the compliance with your C&K sales representative.

Dimensions are shown: mm
Specifications and dimensions subject to change

ACTUATOR TYPE

KSA & KSL

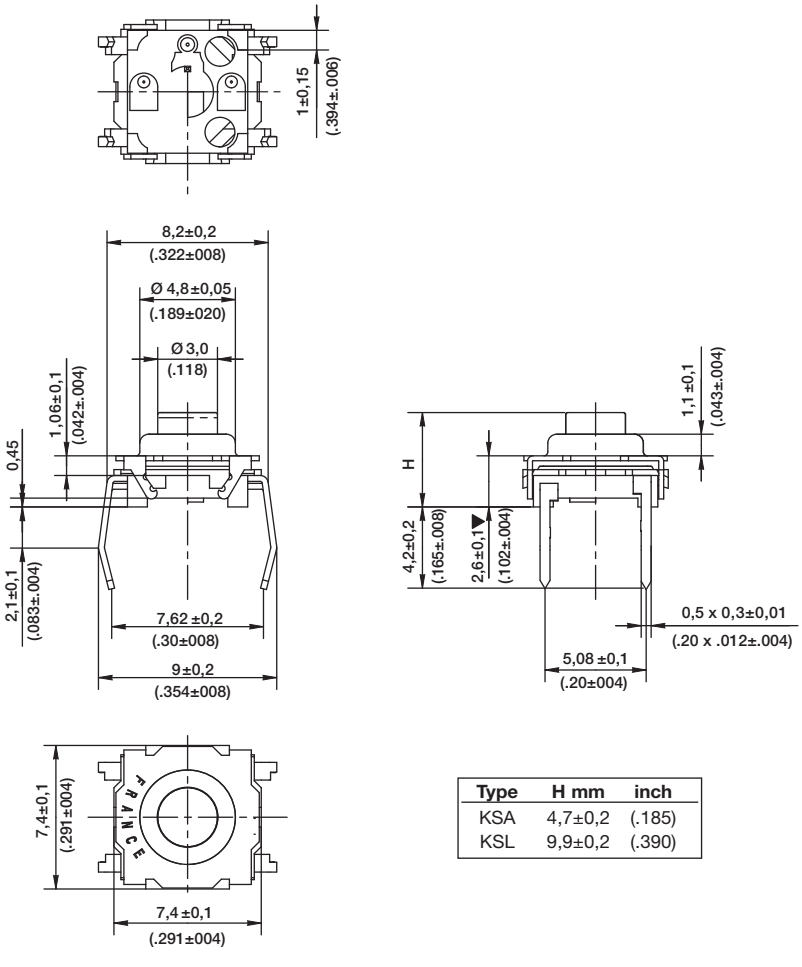

Type	H mm	inch
KSA	4,7±0,2	(.185)
KSL	9,9±0,2	(.390)

GROUND TERMINAL

0 WITHOUT

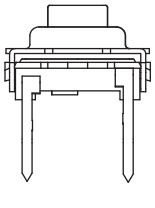

1* WITH

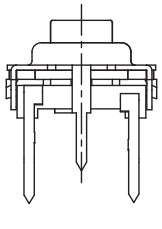

*Not compatible with "V" insertion

First Angle Projection

Dimensions are shown: mm
Specifications and dimensions subject to change

KSA & KSL Series
Sealed Tact Switch

INSERTION

M MANUAL (BULK PACKAGING)

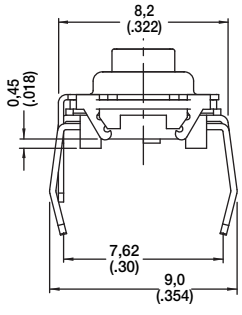

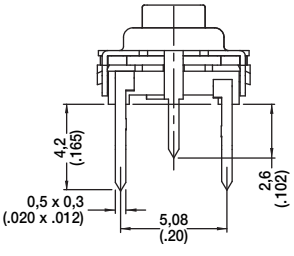

PCB LAYOUT

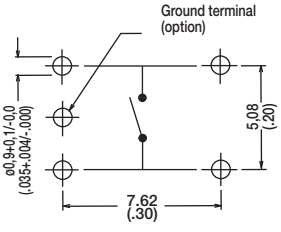

A AUTOMATIC (TUBE PACKAGING, 65 PIECES PER TUBE)

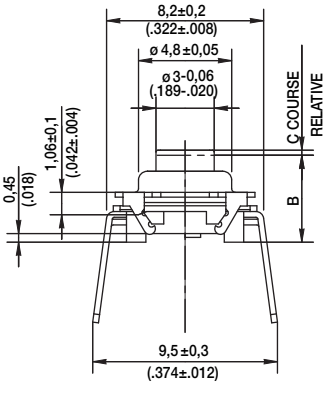

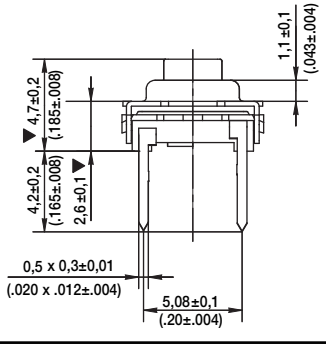

PCB LAYOUT

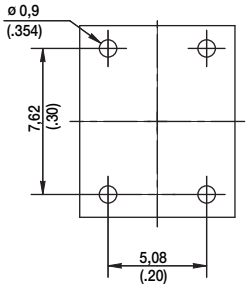

V VERTICAL

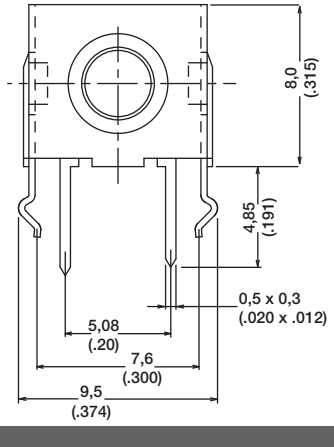

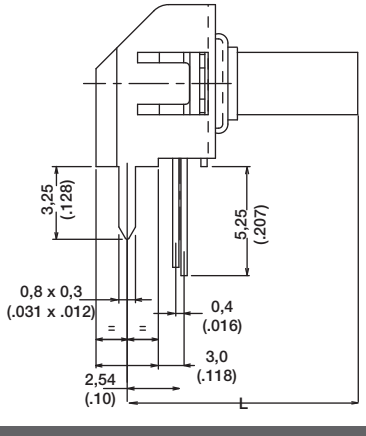

PCB LAYOUT

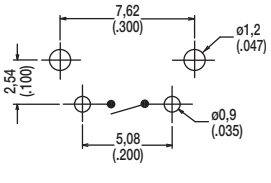

DIMENSION L

Type	L mm	inch
KSA0V	5,8	.228
KSL0V	11,1	.437

OPERATING FORCE

OPTION CODE	OPERATING FORCE
2	1.3 N (130 grams) 100,000 operations
3	1.3 N (130 grams) 1,000,000 operations
4	3.0 N (300 grams) 100,000 operations
5	5.0 N (500 grams) 100,000 operations
9	3.0 N (300 grams) 500,000 operations

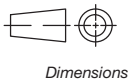
First Angle Projection

Dimensions are shown: mm
Specifications and dimensions subject to change

CONTACT MATERIAL

OPTION CODE	CONTACT MATERIAL
1	Silver contacts
3	Gold contacts

SEALING

OPTION CODE	SEALING
1	Sealing level IP60

BUTTONS

Buttons must be ordered separately and will be supplied in bulk.

BUTTON TYPE	KSA	KSL	KSAV	KSLV
K01	X			
K02	X			
K03	X	X	X	X
K04	X	X	X	X
K05		X		X
K06	X			
K07		X		X
K08		X		X
K09		X		X

K01

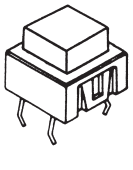

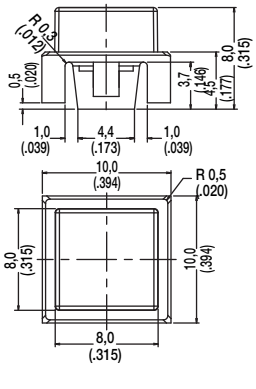

K02

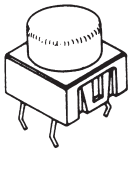

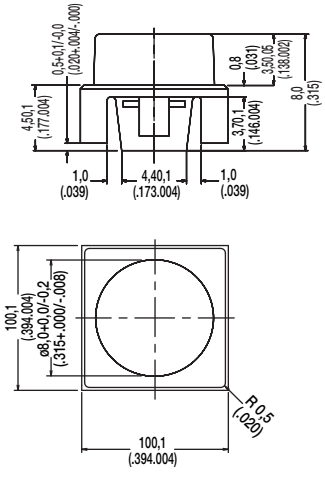

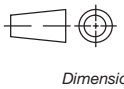
First Angle Projection

Dimensions are shown: mm
Specifications and dimensions subject to change

KSA & KSL Series
Sealed Tact Switch

K03

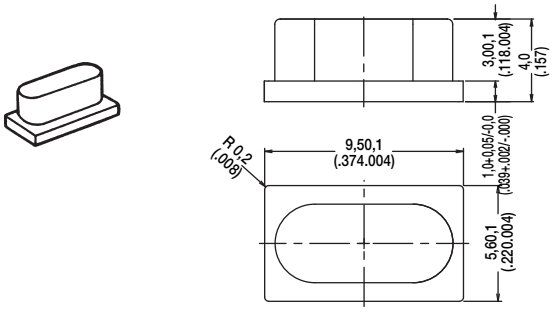

K04

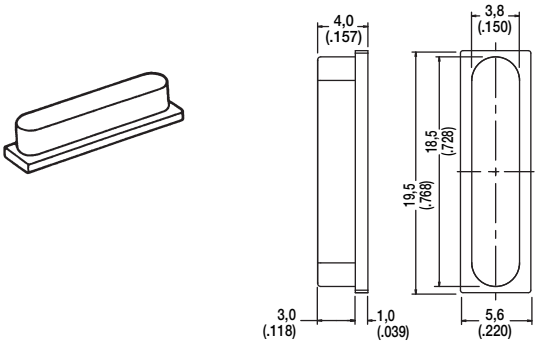

K05

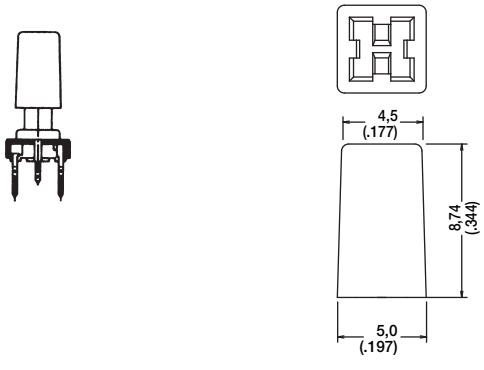

K06

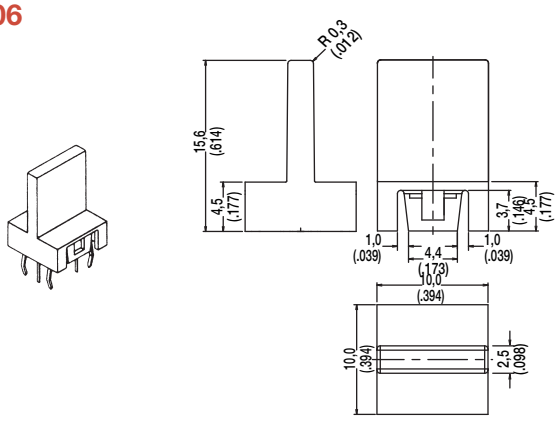

K07

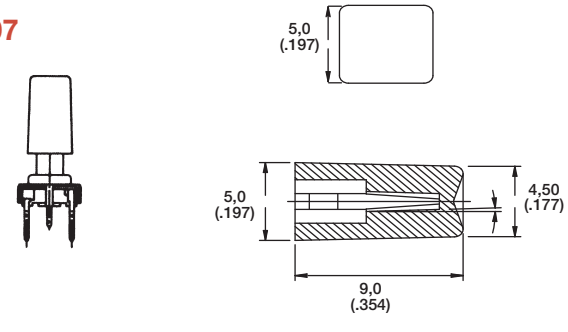

K08

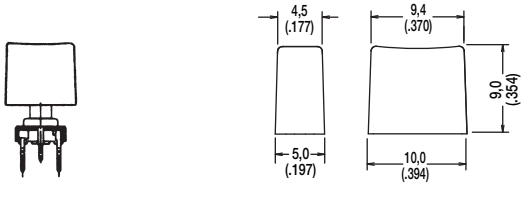

K09

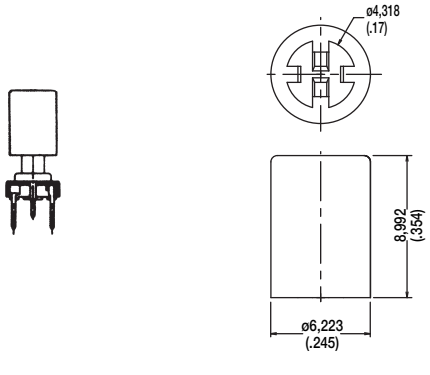

First Angle Projection

Dimensions are shown: mm
Specifications and dimensions subject to change

KSA & KSL MKII Series
High Performance Sealed Tact Switch

Features/Benefits

- ***Highest tact switch sealing performance***
- ***Improved sealing through a modification of the crimping technique and to a double overmolding of the terminal***
- ***Totally sealed***
- ***Up to 1M operations***
- ***RoHS compliant and compatible***

Typical Applications

- ***Automotive***
- ***Industrial***
- ***Telecommunication networks***
- ***Household appliances***
- ***Heating control systems***

Specification

CONTACT ARRANGEMENT: SPST, N.O.
TERMINALS: PC pins
SEALING: IP65
Double overmold on terminals

Mechanical

Type	Actuation force N (grams)	Operating life (operations)	Travel to make
KSA0M212	1,3 ± 0,3	100,000	0,5 ± 0,15
KSA0M312	1,3 ± 0,3	1,000,000	0,5 ± 0,15
KSA0M412	3,25 ± 0,5	100,000	0,6 ± 0,25
KSA0M512	5 ± 1,25	100,000	0,7 ± 0,25

Packaging

Delivered in boxes of 500 pieces (250 pieces for KSL)

NOTE: Specifications listed above are for switches with standard options.
For information on specific and custom switches, consult Customer Service Center.

Other versions in terms of force, termination length and corrosion protection available.
Please contact your sales representative.

This data sheet does not provide enough information for applications which require a certain level of quality or safety such as automotive, medical systems, safety equipment.
Please contact your sales representative to get contractual specification package.

Electrical

	Silver	Gold
MAXIMUM POWER:	1 VA	0.2 VA
MAXIMUM VOLTAGE:	32 VDC	32 VDC
MINIMUM VOLTAGE:	20 mV	20 mV
MAXIMUM CURRENT:	50 mA	10 mA
MINIMUM CURRENT:	1 mA	1 mA

DIELECTRIC STRENGTH: ≥ 250 Vrms
CONTACT RESISTANCE: ≤ 100m Ω
INSULATION RESISTANCE (100 V): ≥ 10^9 Ω
BOUNCE TIME: ≤ 1 ms

Environmental

	Silver	Gold
OPERATING TEMPERATURE:	–40˚C to 85˚C	–40˚C to 125˚C
STORAGE TEMPERATURE:	–40˚C to 85˚C	–55˚C to 125˚C

Process

Wave soldering compatible with lead free soldering profile.

How To Order

Our easy build-a-switch concept allows you to mix and match options to create the switch you need. To order, select desired option from each category and place it in the appropriate box.

However, please note that all the combinations of these options are not feasible.
For any part number different from those listed above, please consult your local represenative.

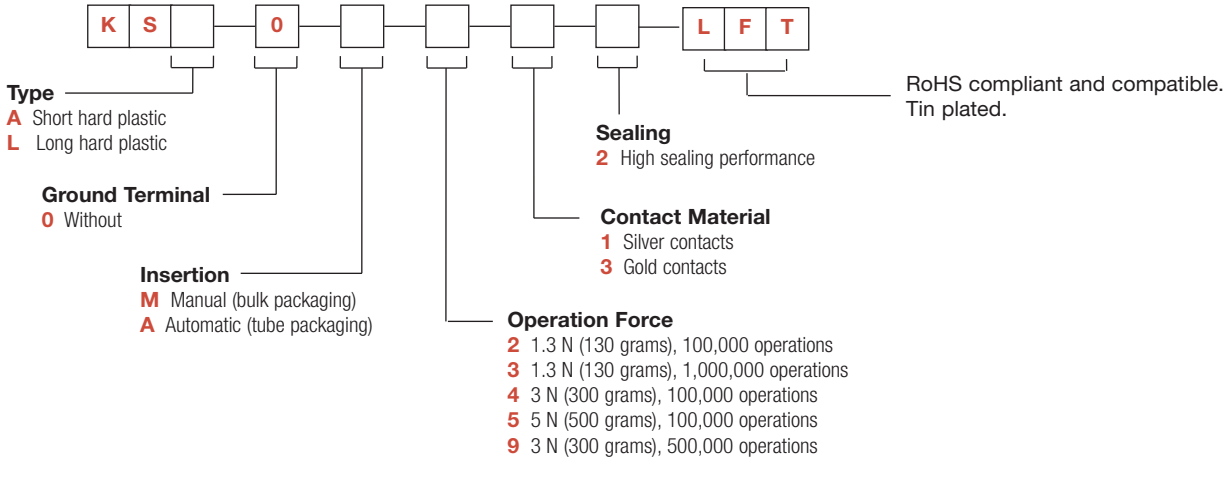

Dimensions are shown: mm
Specifications and dimensions subject to change

KSA & KSL MKII Series
High Performance Sealed Tact Switch

TYPE ☐☐☐ ▪ ▪ ▪ ▪ ▪

KSA & KSL MANUAL INSERTION

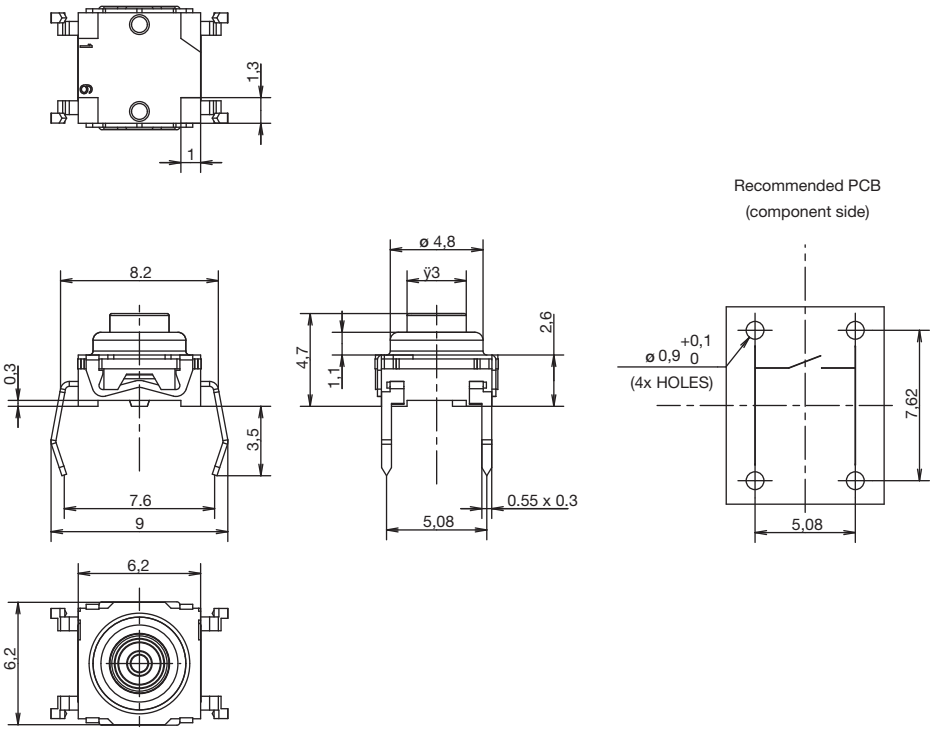

KSA & KSL AUTOMATIC INSERTION

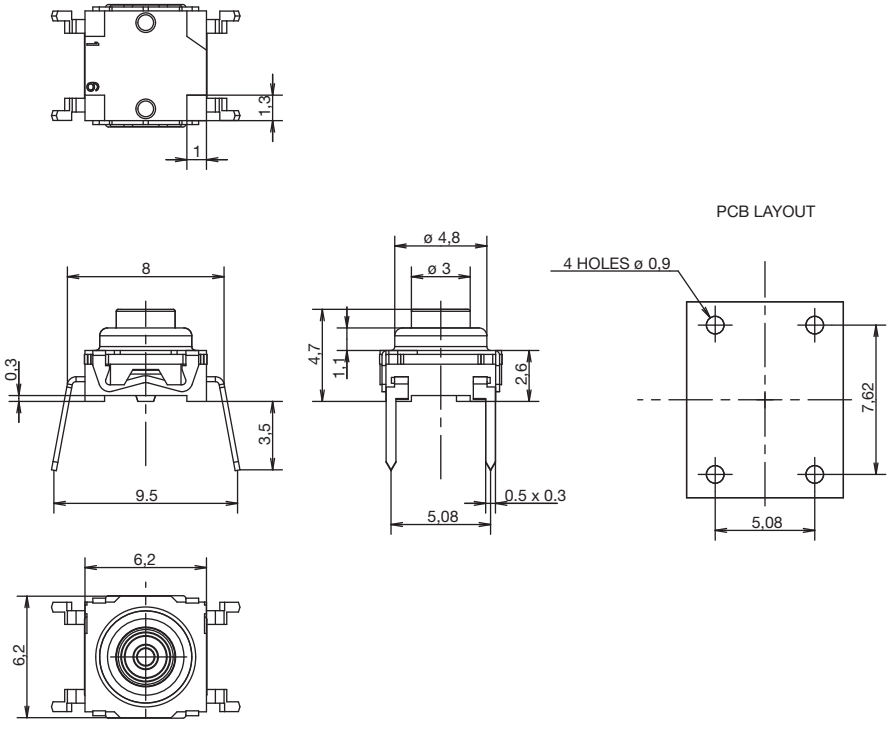

First Angle Projection

Dimensions are shown: mm
Specifications and dimensions subject to change

Features/Benefits

- *Spherical actuator allows actuation force off center ± 30° with regard to vertical*
- *RoHS compliant and compatible*
- *Designed for mechanisms*
- *Compliant side actuation*

Typical Applications

- *Automotive*
- *Cranes, off road, railway*
- *Factory automation*
- *Security systems*

Specification

FUNCTION: Momentary action
CONTACT ARRANGEMENT: 1 make contact = SPST, N.O.
DISTANCE BETWEEN BUTTON CENTERS (min.): 7.62 (0.300)
TERMINALS: PC pins
SEALING: IP60

Mechanical

Type	Actuation force N (grams)	Operating life (operations) axial	Operating life (operations) radial	Travel to make (mm)
KSJ0M21160SH	2 ± 0,5	100,000	30,000	0,6 ± 0,3
KSJ0M41180SH	3,0 ± 0,8	100,000	30,000	0,55 ± 0,25
KSJ0M21180SH	2 ± 0,5	100,000	30,000	0,35 ± 0,2
KSJ0M91180SH	3,9 ± 0,8	100,000	30,000	0,7 ± 0,25

Electrical

	Silver	Gold
MAXIMUM POWER:	1 VA	0.2 VA
MAXIMUM VOLTAGE:	32 VDC	32 VDC
MINIMUM VOLTAGE:	20 mV	20 mV
MAXIMUM CURRENT:	50 mA	10 mA
MINIMUM CURRENT:	1 mA	1 mA

DIELECTRIC STRENGTH (50 Hz, 1 min.): ≥ 250 Vrms
CONTACT RESISTANCE: ≤100m Ω
INSULATION RESISTANCE (100V): ≥ 10^9 ohms
BOUNCE TIME: ≤ 1 ms

Environmental

	Silver	Gold
OPERATING TEMPERATURE:	-40°C to 85°C	-40°C to 125°C
STORAGE TEMPERATURE:	-40°C to 85°C	-55°C to 125°C

Packaging

Delivered in boxes of 250 pieces.

Process

Wave soldering, compatible with lead free soldering profile.

NOTE: Specifications listed above are for switches with standard options.
For information on specific and custom switches, consult Customer Service Center.

This data sheet does not provide enough information for applications which require a certain level of quality or safety such as automotive, medical systems, safety equipment. Please contact your sales representative to get contractual specification package.

* Please contact your C&K represenative for any question regarding the product intergration.

How To Order

Our easy build-a-switch concept allows you to mix and match options to create the switch you need. To order, select desired option from each category and place it in the appropriate box.

However, please note that all the combinations of these options are not feasible.
For any part number different from those listed in the table above, please consult your local represenative.

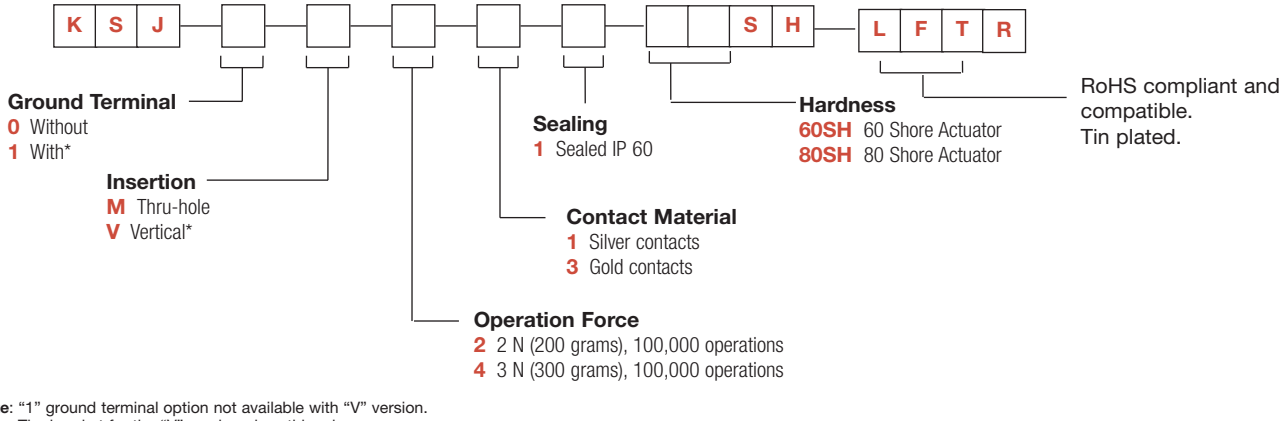

***Note**: "1" ground terminal option not available with "V" version.
The bracket for the "V" version plays this role.

KSJ Series
Spherical Actuator Tact Switches

KSJ

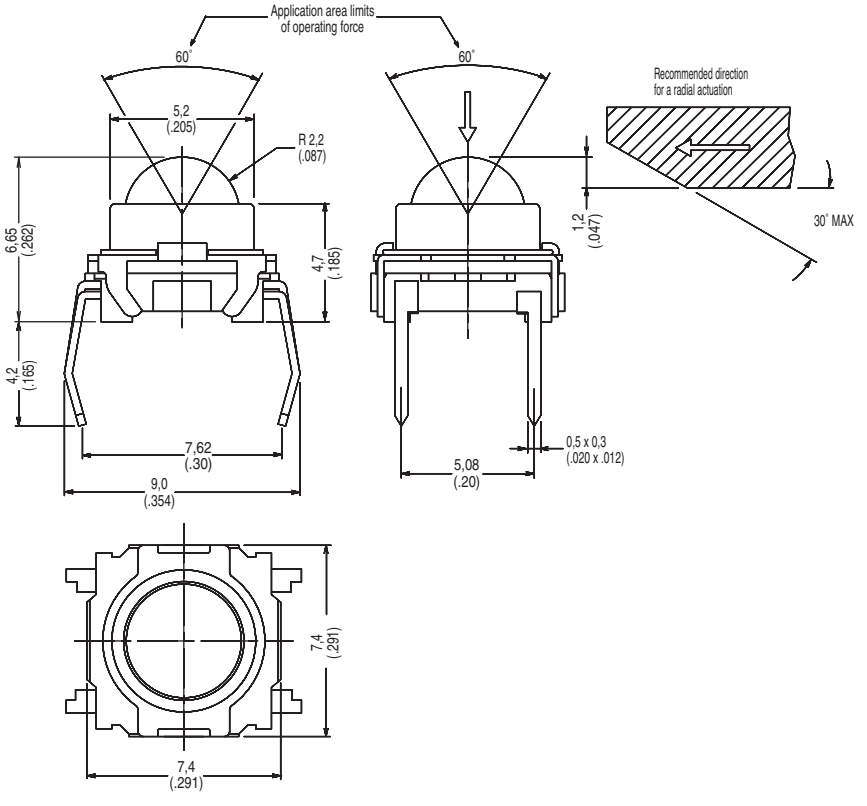

KSJ0M211

INSERTION

M THRU-HOLE

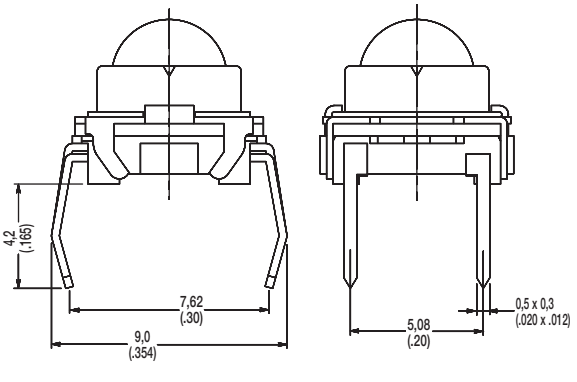

PCB LAYOUT

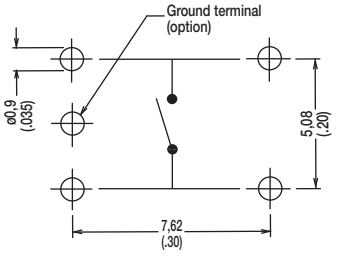

V VERTICAL

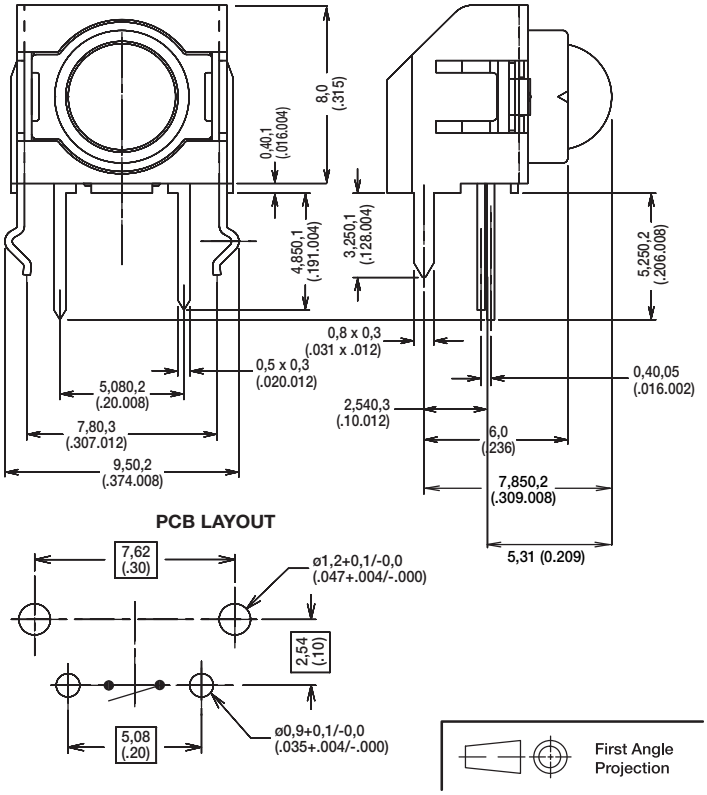

PCB LAYOUT

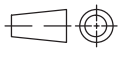

First Angle Projection

Dimensions are shown: mm
Specifications and dimensions subject to change

Features/Benefits

- *Compact size 6 x 3.5 mm*
- *Variety of switch heights*
- *Choice of actuation force*
- *RoHS compliant and compatible*

Typical Applications

- *Consumer products*
- *Instrumentation*
- *Computer products*
- *Industrial*

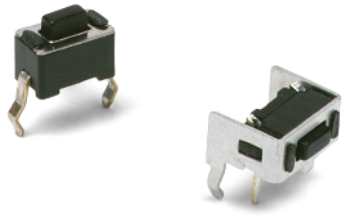

Specification

FUNCTION: Momentary action
CONTACT ARRANGEMENT: SPST, N.O.
TERMINALS: PC pins

Mechanical

ACTUATION FORCE: PTS635L models: 130 grams.
PTS635H models: 200 grams.
LIFE EXPECTANCY: 20,000 operations.

Electrical

CONTACT RATING: 50 mA @ 12 V DC.
DIELECTRIC STRENGTH: 250 V AC min.
CONTACT RESISTANCE: 100 mΩ max. initial.
INSULATION RESISTANCE: 10^{11}Ω min.

Environmental

OPERATING TEMPERATURE: -40˚C to 60˚C

NOTE: Specifications listed above are for switches with standard options.
For information on specific and custom switches, consult Customer Service Center.

Process

SOLDERING: Preheating to 100˚C for 45 sec. max. Keep flux flush with top surface of PCB; do not apply to component side of PCB and area where terminals are located. Soldering to 255˚C for 5 sec. max. Clean by brushing on solder surface. Do not clean switch with solvents.

Materials

BASE: 6/6 nylon or glass filled polyester (PBT) (UL 94V-0).
ACTUATOR: 6/6 nylon or polyacetal (UL 94HB).
COVER PLATE: PTS635S and PTS635V models: Tin plated stainless steel
DOME CONTACTS: Phosphor bronze, silver clad.
STATIONARY CONTACTS: Brass, silver plated.
TERMINALS: Brass, silver plated. Insert molded.

Packaging

Bulk packaging.

Tape & reel for:
PTS635Sx43SMTR, 1700 pcs per reel

How To Order

Our easy build-a-switch concept allows you to mix and match options to create the switch you need. To order, select desired option from each category and place it in the appropriate box.

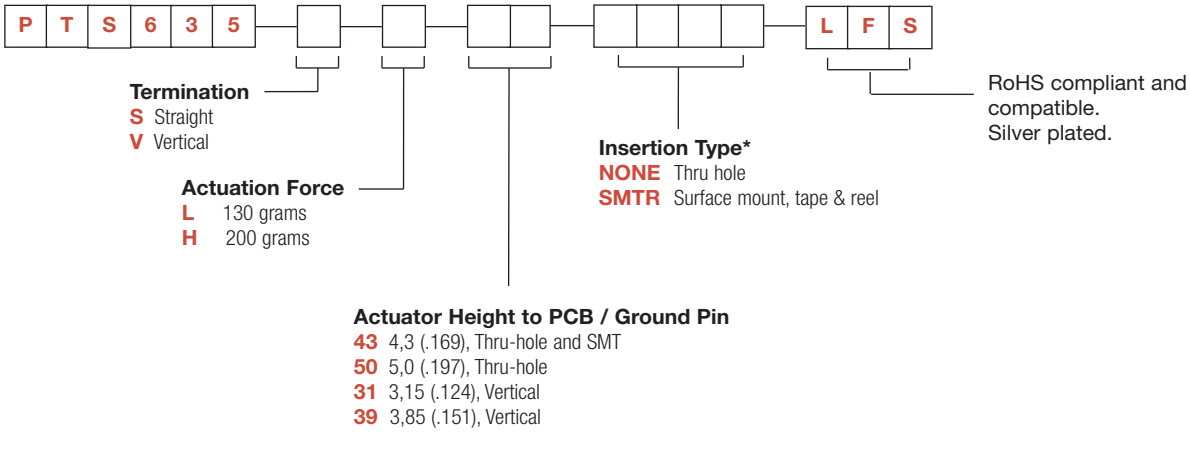

* SMTR only available with PTS635 43 Actuator Height options.

PTS635 Series
3,5 mm Tact Switches

SERIES

PTS635

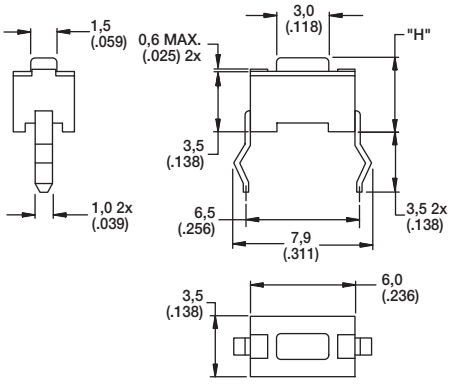

For "H" dimension please refer to chart on next page

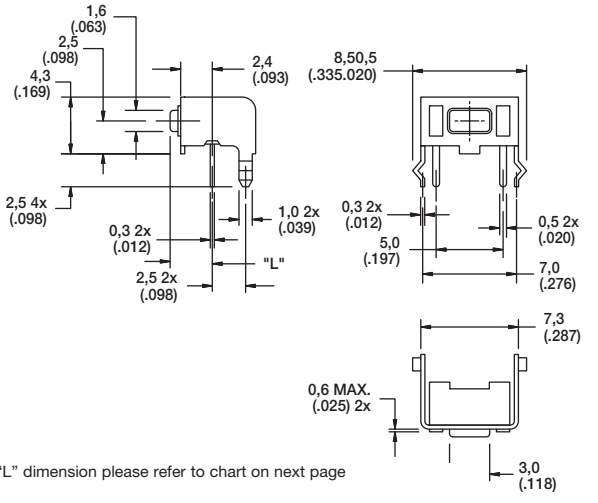

For "L" dimension please refer to chart on next page

TERMINATION

S STRAIGHT

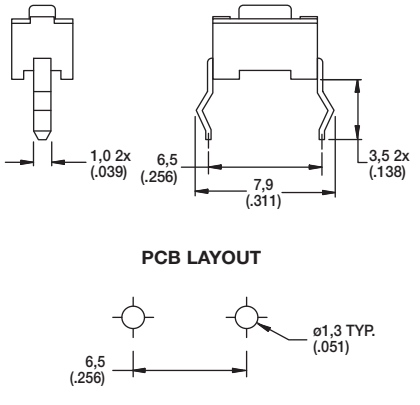

V VERTICAL

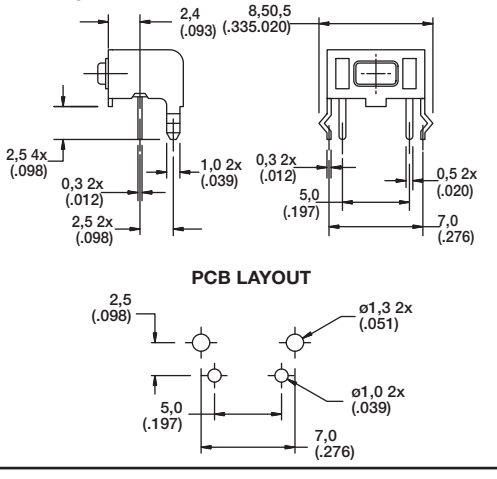

SMT 43

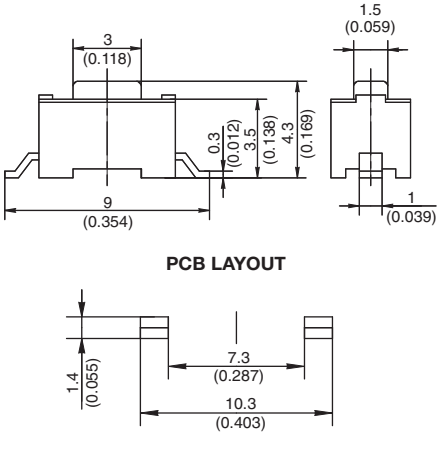

First Angle Projection

Dimensions are shown: mm
Specifications and dimensions subject to change

ACTUATION FORCE

OPTION CODE	FORCE
L	130 grams
H	200 grams

ACTUATOR HEIGHT

OPTION CODE	HEIGHT "H" or LENGTH "L"	TERMINATION	SCHEMATIC
43	4,3 (.169)	Thru-hole & SMT	1 2
50	5,0 (.197)	Thru-hole	
31	3,15 (.124)	Vertical	1 2 3 4
39	3,85 (.151)	Vertical	

INSERTION TYPE

SMTR 43

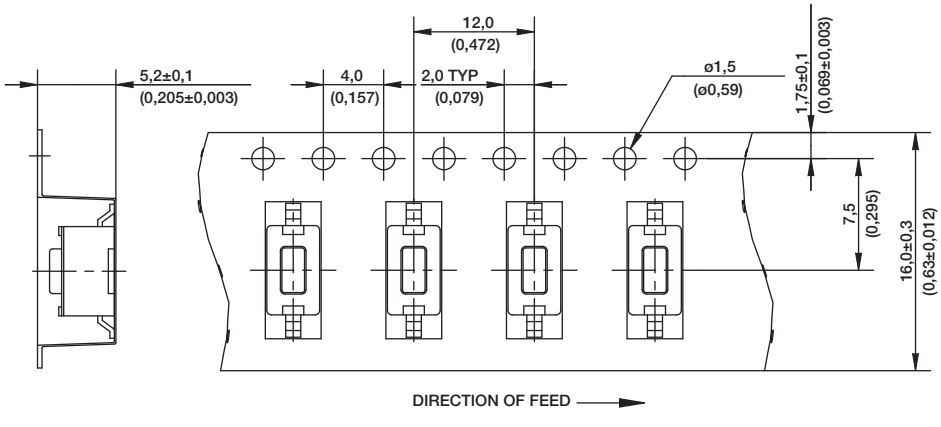

First Angle Projection

Dimensions are shown: mm
Specifications and dimensions subject to change

PTS641 Series
SMT Top Actuated Switches

Features/Benefits

- ***6.3 x 6.3 mm footprint***
- ***Multiple heights***
- ***Ground pin option***

Typical Applications

- ***Metering***
- ***White goods***
- ***Home and garden equipment***

Specification

FUNCTION: Momentary action
CONTACT ARRANGEMENT: 1 make contact = SPST N.O.
TERMINALS: G type for SMT

Mechanical

TRAVEL:
0.20 mm ±0.15 mm for 160 &250 gf
0.30 mm ±0.15 mm for 320 gf
OPERATING LIFE: 100,000 cycles
OPERATION FORCE:
160 gf ±50 gf blue actuator
250 gf ±50 gf red actuator
320 gf ±80 gf black actuator

Packaging

Switches in reels of 1,500 pieces.
Dimensions of reels according to EIA 481B
External diameter 330 mm

Electrical

MAXIMUM VOLTAGE: 12 VDC
MAXIMUM CURRENT DC: 50 mA
DIELECTRIC STRENGTH: 250 VA C (1mn)
CONTACT RESISTANCE: 100 m Ω
INSULATION RESISTANCE: ≥ 100 M Ω
BOUNCE TIME: < 5 ms

Environmental

OPERATING TEMPERATURE: -20˚C to 85˚C

Process

SOLDERING: This component is suited to the following methods:
Infrared Reflow Soldering in accordance with IEC61760-1

NOTE: Specifications listed above are for switches with standard options.
For information on specific and custom switches, consult Customer Service Center.

How To Order

Our easy build-a-switch concept allows you to mix and match options to create the switch you need. To order, select desired option from each category and and place it in the appropriate box.

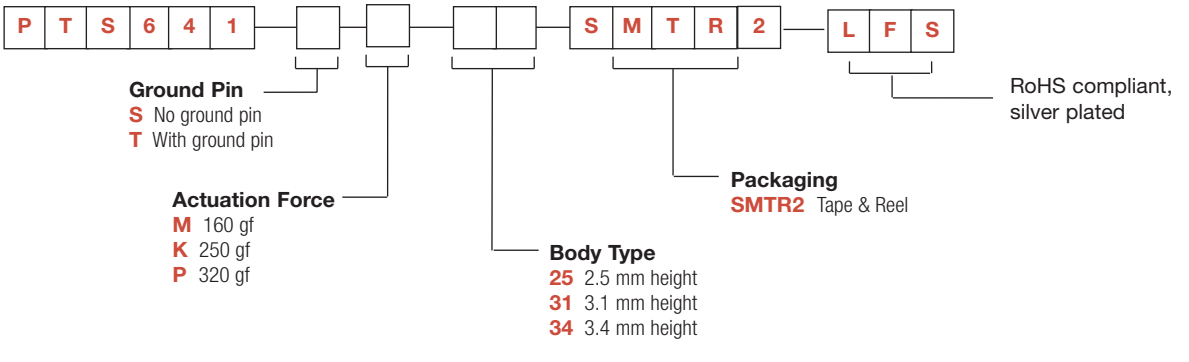

PTS641 Series
SMT Top Actuated Switches

NO GROUND PIN H = 2.5, 3.1, or 3.4 mm

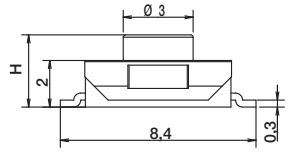

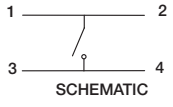

SCHEMATIC

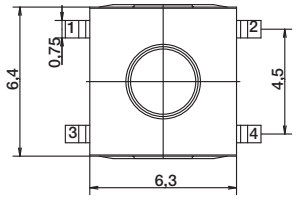

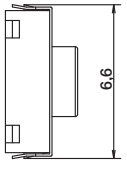

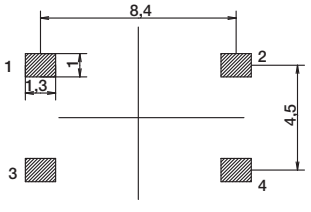

RECOMMENDED PCB LAYOUT

GROUND PIN H = 2.5, 3.1, or 3.4 mm

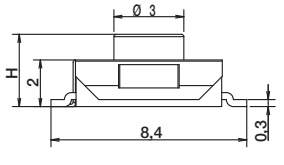

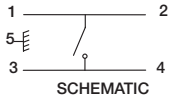

SCHEMATIC

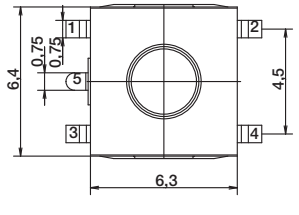

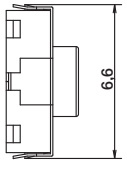

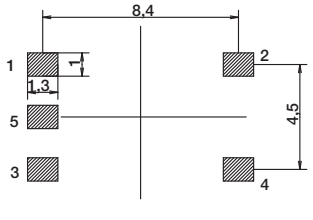

RECOMMENDED PCB LAYOUT

PTS645 Series
6 mm Tact Switches

Features/Benefits

- ***Compact size 6 x 6 mm***
- ***Variety of actuator lengths***
- ***Choice of actuation force***
- ***RoHS compliant and compatible***

Typical Applications

- ***Consumer products***
- ***Instrumentation***
- ***Computer products***
- ***Industrial***

Specification

FUNCTION: Momentary action
CONTACT ARRANGEMENT: SPST, N.O.
TERMINALS: PC pins

Mechanical

ACTUATION FORCE: 130 grams, 160 grams, 200 grams, 260 grams
LIFE EXPECTANCY: 100,000 operations.

Electrical

CONTACT RATING: 50 mA @ 12 V DC.
DIELECTRIC STRENGTH: 250 V AC min.
CONTACT RESISTANCE: 100 mΩ max. initial.
INSULATION RESISTANCE: 10^{11} Ω min.

Environmental

OPERATING TEMPERATURE: -20˚C to 60˚C

Process

SOLDERING: Preheating to 100˚C for 45 sec. max. Keep flux flush with top surface of PCB; do not apply to component side of PCB and area where terminals are located. Soldering to 255˚C for 5 sec. max. Clean by brushing on solder surface. Do not clean switch with solvents.

Packaging

Bulk packaging.

Tape & reel for the SMT type:
Reels of 1,000 pieces for 4,3 and 5,0 mm height
Reels of 700 pieces for 7,0 mm height
Reels of 500 pieces for 9,5 mm height
Reels of 400 pieces for 13,0 mm height

NOTE: Specifications listed above are for switches with standard options.
For information on specific and custom switches, consult Customer Service Center.

How To Order

Our easy build-a-switch concept allows you to mix and match options to create the switch you need. To order, select desired option from each category and and place it in the appropriate box.

P T S 6 4 5 [ ] [ ] [ ] [ ][ ] [ ][ ][ ][ ] L F S

Termination
S Straight
T Straight with ESD pin
V Vertical

Actuator Shape
NONE Round actuator, All versions
J Square actuator, 2.4 mm side
THT versions only (No ESD pin - not available with Termination "T" style

Actuation Force
L 130 grams
M 160 grams
H 200 grams
K 260 grams

Insertion Type
2 Thru hole
SMTR92* Surface mount, tape & reel

RoHS compliant and compatible.
Silver plated.

Switch height from PCB for S and T only
(H dimension see actuator height drawings)
43 4,3 (.169), thru-hole and SMT
50 5,0 (.197), thru-hole and SMT
70 7,0 (.275), thru-hole and SMT
73 7,3 (.287), thru-hole, square actuator 2.4 mm side only
95 9,5 (.374), thru-hole and SMT
13 13,0 (.512) SMT only

Switch length from front leads for V only
(H dimension see actuator height drawings)
31 3,15 (.124), vertical
39 3,85 (.151), vertical
58 5,85 (.230), vertical
61 6,15 (.242), vertical, square actuator 2.4 mm side only
83 8,35 (.329), vertical

*Only the straight type termination without ESD pin is available in SMT type.

Dimensions are shown: mm
Specifications and dimensions subject to change

PTS645 Series
6 mm Tact Switches

TERMINATION

S STRAIGHT

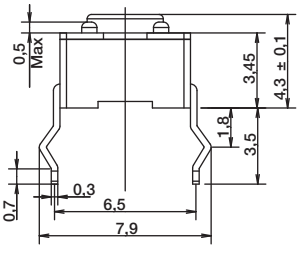

SCHEMATIC

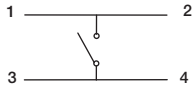

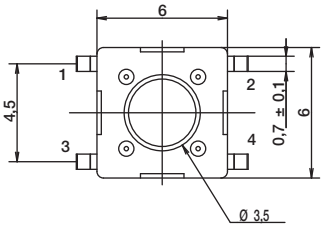

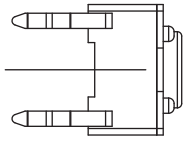

PCB LAYOUT

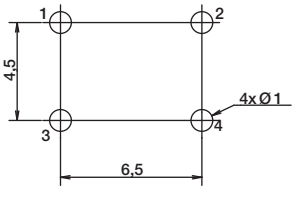

T STRAIGHT WITH ESD PIN

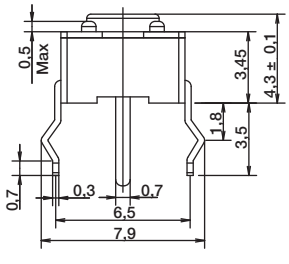

SCHEMATIC

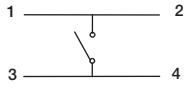

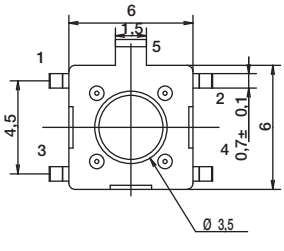

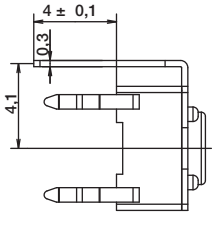

PCB LAYOUT

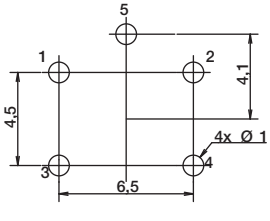

V VERTICAL

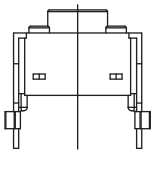

SCHEMATIC

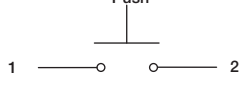

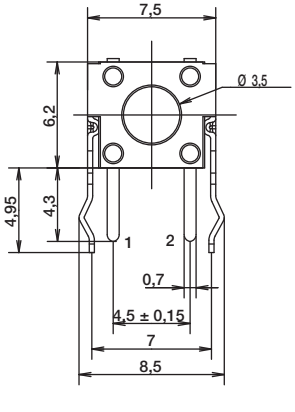

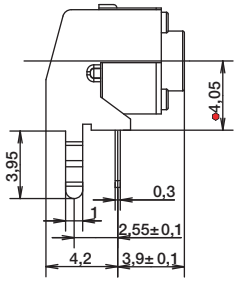

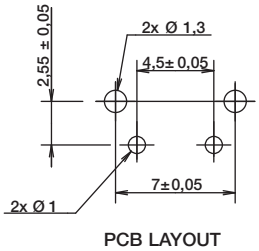

PCB LAYOUT

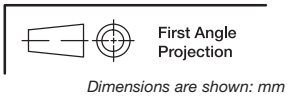

Dimensions are shown: mm
Specifications and dimensions subject to change

PTS645 Series
6 mm Tact Switches

TERMINATION

SMT

FOR 4.3, 5.0, 7.0, 9.5 MM HEIGHT

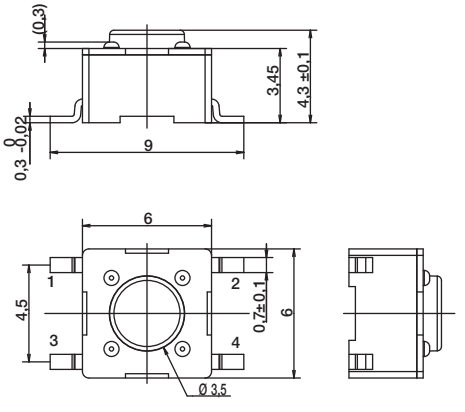

13.0 MM HEIGHT ONLY

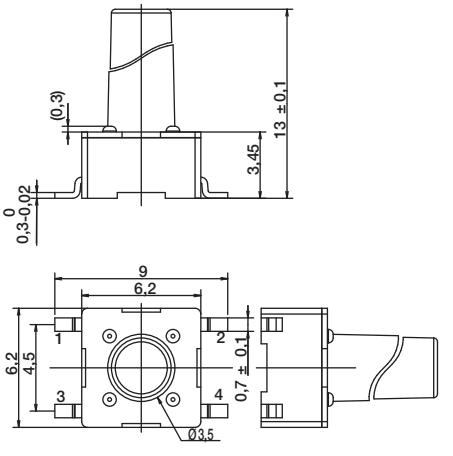

SCHEMATIC

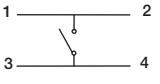

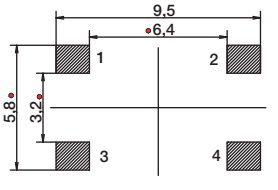

PCB LAYOUT

ACTUATOR SHAPE

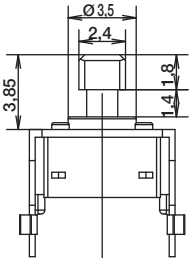

SCHEMATIC

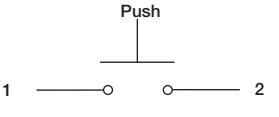

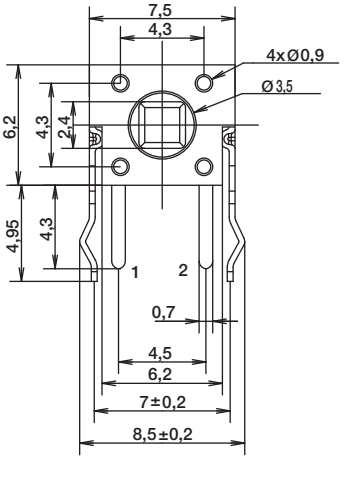

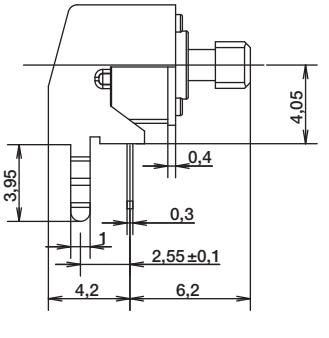

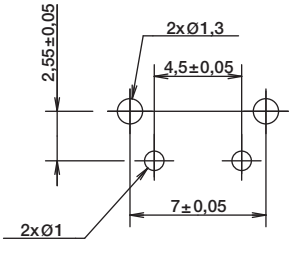

RECOMMENDED PCB LAYOUT

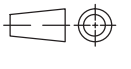

First Angle Projection

Dimensions are shown: mm
Specifications and dimensions subject to change

ACTUATOR SHAPE

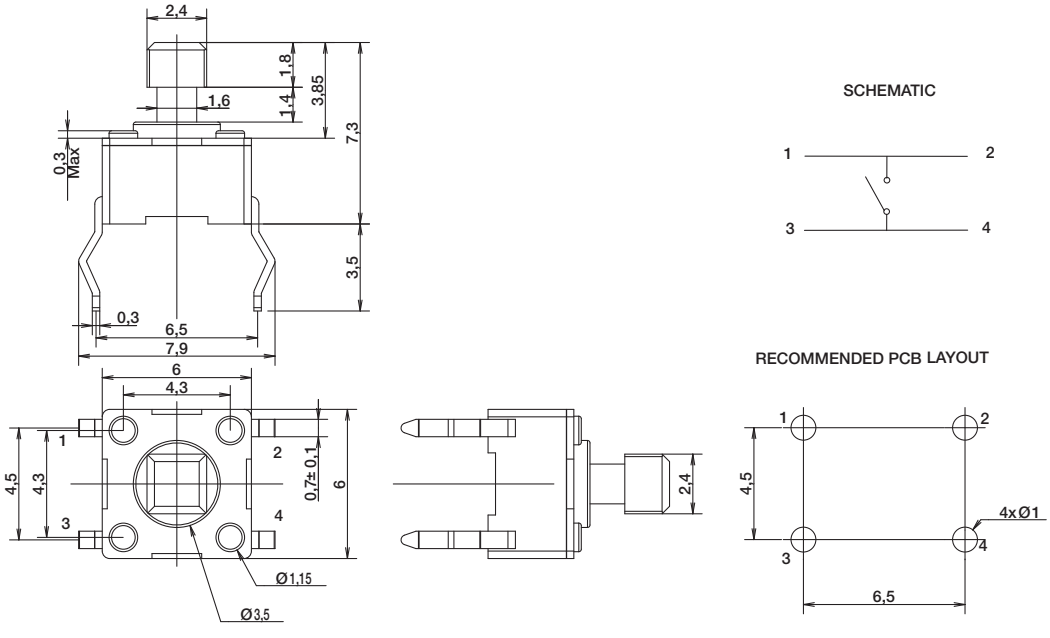

ACTUATION FORCE

OPTION CODE	FORCE
L	130 grams Black
M	160 grams Blue
H	200 grams Gray
K	260 grams Red

ACTUATOR HEIGHT

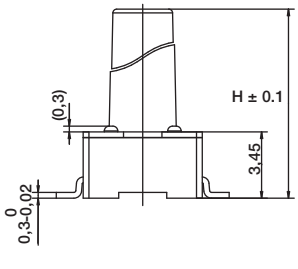

Switch height from PCB for S and T only

OPTION CODE	DIMENSION H	TERMINATION	SCHEMATIC Without EMC pin	SCHEMATIC With EMC pin
43	4,3 (.169)	Thru-hole and SMT		
50	5,0 (.197)	Thru-hole and SMT		
70	7,0 (.275)	Thru-hole and SMT		
95	9,5 (.374)	Thru-hole and SMT		
13	13,0 (.512)	SMT		

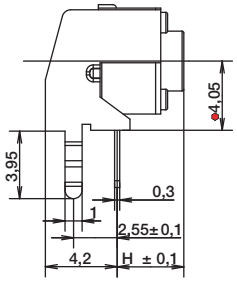

Switch length from front leads for V only

OPTION CODE	DIMENSION H	TERMINATION	SCHEMATIC Without EMC pin	SCHEMATIC With EMC pin
31	3,15 (.124)	Vertical		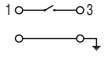
39	3,85 (.151)	Vertical		
58	5,85 (.230)	Vertical		
83	8,35 (.329)	Vertical		

TAPE & REEL

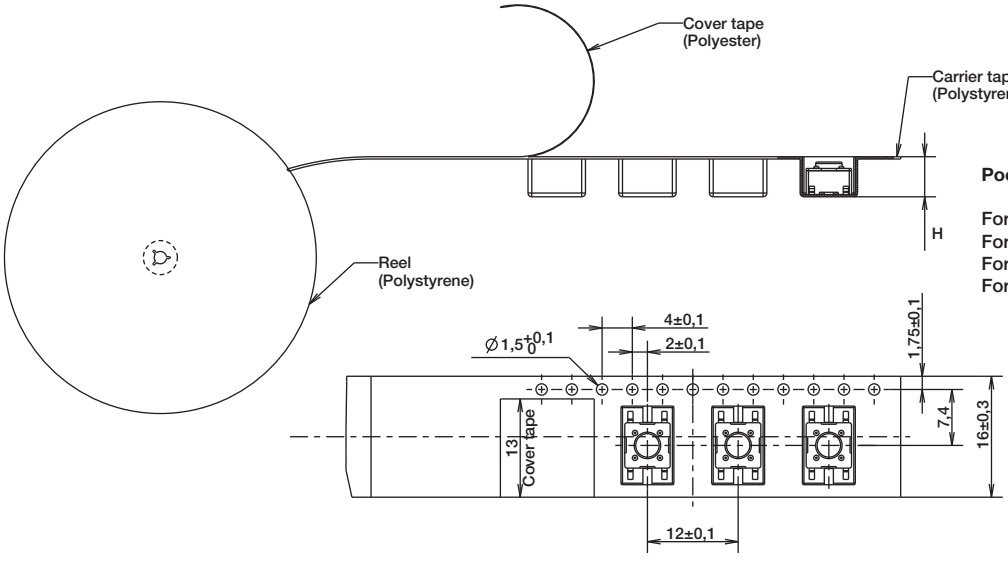

Pocket Height

For 4.3 and 5.0 mm: Height 5.3 mm
For 7.0 mm: Height 7.3 mm
For 9.5 mm: Height 10.3 mm
For 13.0 mm: Height 13.3 mm

PTS645 V SMT Series
6 mm SMT Side Actuated Tact Switch

Features/Benefits

- ***Full SMT processing***
- ***Strong PCB soldering pads***
- ***Compact 6 x 6 mm design***

Typical Applications

- ***Consumer Products***
- ***Set Top and Access Boxes***
- ***Instrumentation***
- ***Home and Garden Equipment***

Specification

FUNCTION: Momentary action
CONTACT ARRANGEMENT: 1 make contact = SPST, N.O.
TERMINALS: G type for SMT
TRAVEL: 0.25 mm +0.2/-0.1 mm
OPERATING LIFE: 100,000 cycles

Mechanical

Part Number	Operating Force (gf)	Actuator Color
PTS645 VN13 SMTR92 LFS	100 ± 30	Dark grey
PTS645 VM13 SMTR92 LFS	160 ± 50	Yellow green

Electrical

MAXIMUM VOLTAGE: 12 V DC
MAXIMUM CURRENT: 50 mA
DIELECTRIC STRENGTH: 100 V AC (1mn)
CONTACT RESISTANCE: ≤ 100 mΩ
INSULATION RESISTANCE: ≥ 100 MΩ
BOUNCE TIME: ≤ 10 ms

Environmental

OPERATING TEMPERATURE: -20˚C to 70˚C
STORAGE TEMPERATURE: -30˚C to 80˚C

Process

SOLDERING: This component is suited to the following methods:
Infrared Reflow Soldering in accordance with IEC61760-1

Recommended solder paste thickness is ≥ 15µm

Packaging

In reels of 650 pieces
Dimensions of reels according to EIA 481B
External diameter 330 mm

NOTE: Specifications listed above are for switches with standard options.
For information on specific and custom switches, consult Customer Service Center.

How To Order

Our easy build-a-switch concept allows you to mix and match options to create the switch you need. To order, select desired option from each category and and place it in the appropriate box.

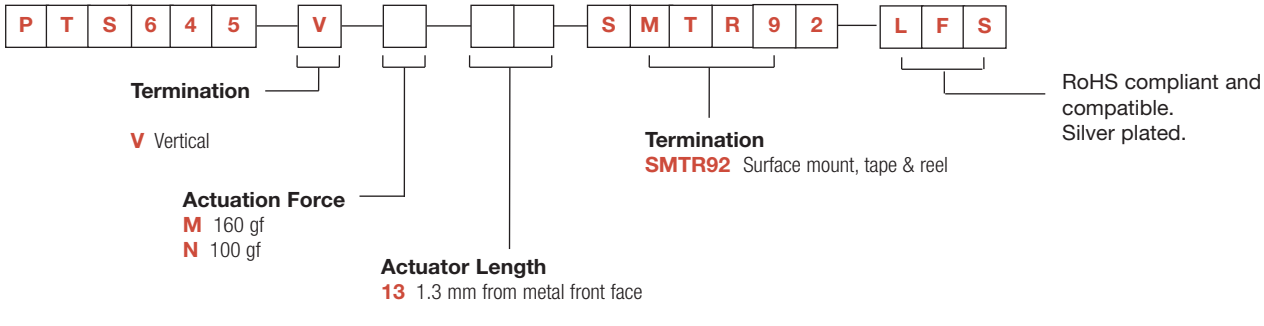

PTS645 V SMT Series
6 mm SMT Side Actuated Tact Switch

RECOMMENDED PCB LAYOUT

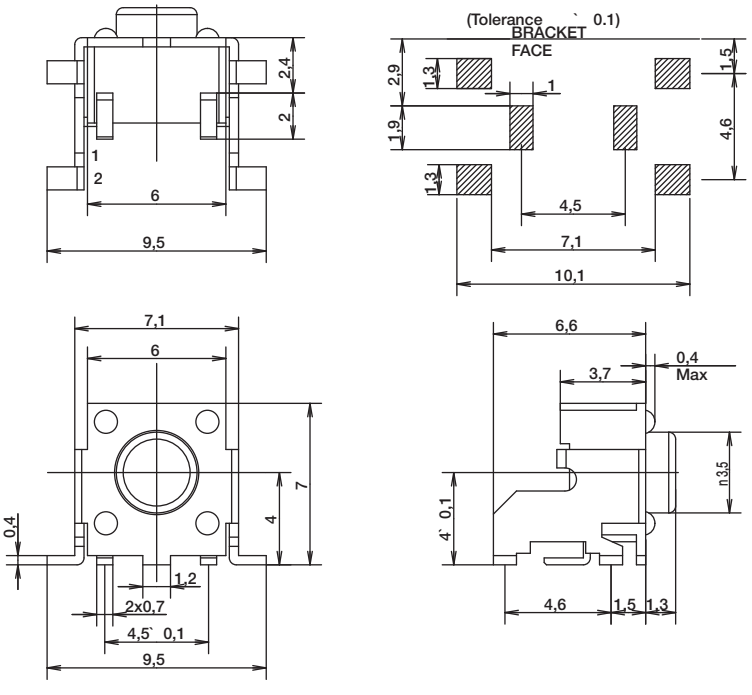

SCHEMATIC

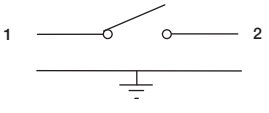

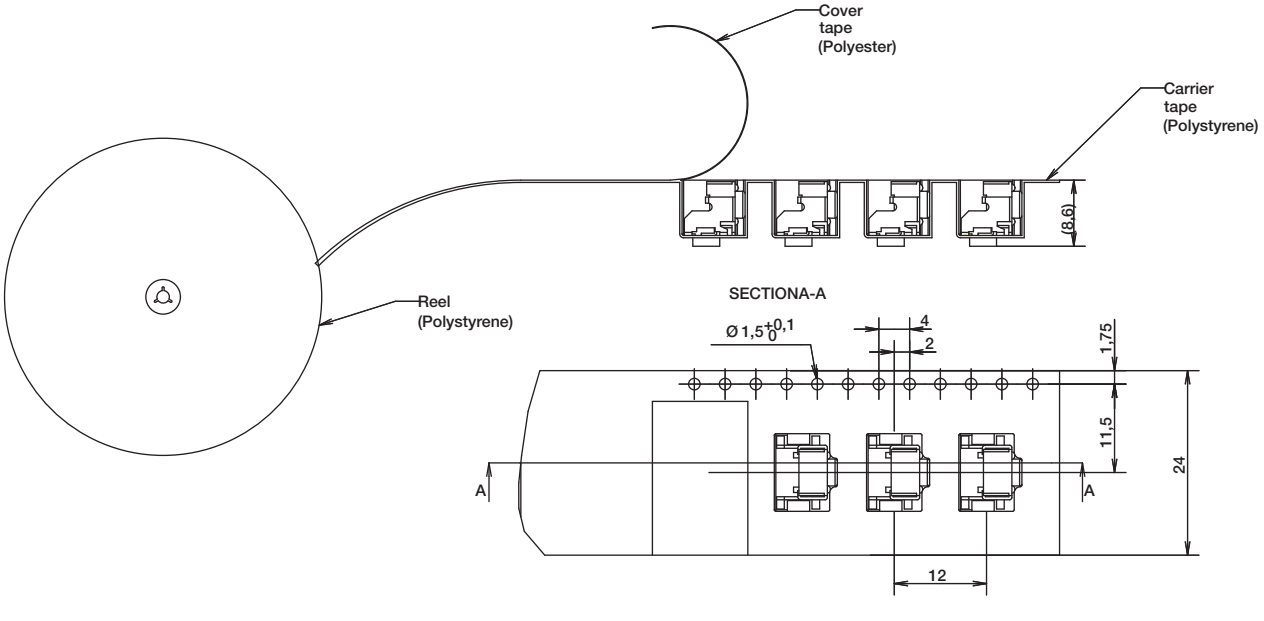

PTS125 Series
12 mm Tact Switches

Features/Benefits

- ***THT and SMT terminations***
- ***Various heights***
- ***Snap fit actuator option***

Typical Applications

- ***Consumer products***
- ***Instrumentation***
- ***Computer products***
- ***Industrial***

Specification

FUNCTION: Momentary action
CONTACT ARRANGEMENT: 1 make contact SPST, N.O.
TERMINALS: PC pins for THT and G type for SMT
TRAVEL: 0.30 mm ± 0.15 mm

Mechanical

OPERATING LIFE: 200,000 cycles
OPERATING FORCE: 180 gf ± 50
250 gf ± 50

Electrical

MAX VOLTAGE: 12 VDC
MAX CURRENT: 50 mA
DIELECTRIC STRENGTH: 250 V AC (1mn)
CONTACT RESISTANCE: <100 mΩ
INSULATION RESISTANCE: >100MΩ
BOUNCE TIME: < 5 ms

NOTE: Specifications listed above are for switches with standard options.
For information on specific and custom switches, consult Customer Service Center.

Environmental

OPERATING TEMPERATURE: -20˚C to 70˚C

Process

SOLDERING: This component is suited to the following methods:
Infrared reflow soldering in accordance with IEC 61760-1 for SMT version
Wave soldering compatible with lead free soldering profile

Packaging

Soldering Style	Height	Packaging	Parts per Packaging
THT	All heights	Plastic bag	500
SMT	4.3 mm	tape & reel	900
SMT	4.3 mm with pegs	tape & reel	600
SMT	7.3 mm	tape & reel	500
SMT	7.3 mm with pegs	tape & reel	500
SMT	8.5 mm	tape & reel	500
SMT	8.5 mm with pegs	tape & reel	400
SMT	12 mm	tape & reel	250

Dimensions of reels according to EIA 481B. External diameter 330 mm.

How To Order

Our easy build-a-switch concept allows you to mix and match options to create the switch you need. To order, select desired option from each category and and place it in the appropriate box.

P T S 1 2 5 — S — [ ] — [ ] — [ ][ ] — [ ] — [ ] — -2 — L F S

Style
S Straight, top actuated

Actuator Shape
NONE Round
J Snap fit 73 height only

Actuator Force
M 180 grams
K 250 grams

Switch Height
43 4.3 mm round actuator
73 7.3 mm sqaure snap fit actuator
85 8.5 mm round actuator
12 12.0 mm round actuator with ribs

Other heights with the round actuator are available upon request. Different minimum order quantities than the stand may apply.

Pegs Option
NONE no pegs
P with pegs - only for SMT version in round and square snap fit actuator (not for 12 switch height)

Termination & Packaging
NONE THT in bags
SMTR SMT in tape & reel

RoHS, silver plated

Dimensions are shown: mm
Specifications and dimensions subject to change

PTS125 Series
12 mm Tact Switches

THT VERSION WITH ROUND ACTUATOR H= 4.3 & 8.5 MM (other height upon request)

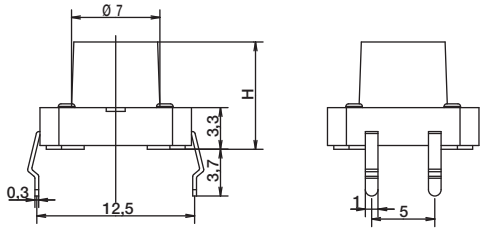

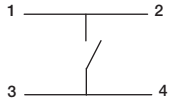

SCHEMATIC

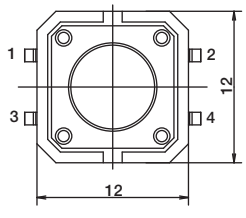

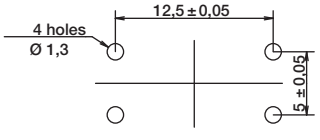

RECOMMENDED PCB LAYOUT

SMT VERSION WITH ROUND ACTUATOR AND PEGS H= 4.3 & 8.5 MM (other height upon request)

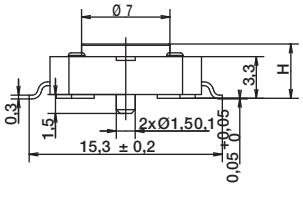

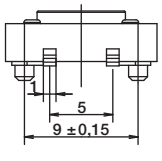

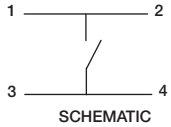

SCHEMATIC

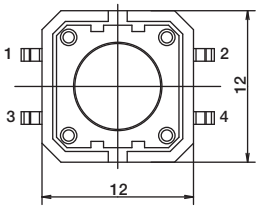

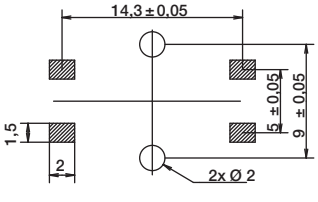

RECOMMENDED PCB LAYOUT

First Angle Projection

Dimensions are shown: mm
Specifications and dimensions subject to change

THT VERSION WITH SQUARE SNAP FIT ACTUATOR H= 7.3 MM

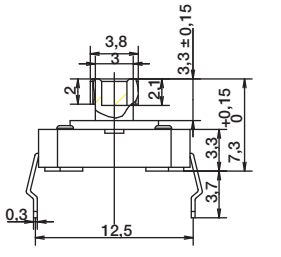

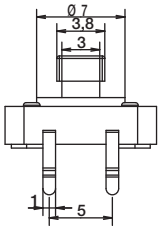

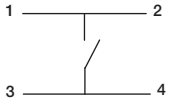

SCHEMATIC

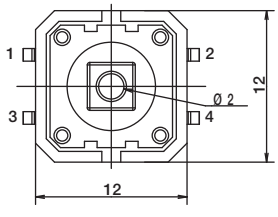

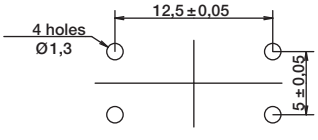

RECOMMENDED PCB LAYOUT

SMT VERSION WITH SQUARE SNAP FIT ACTUATOR AND PEGS H= 7.3 MM

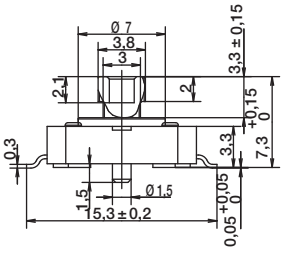

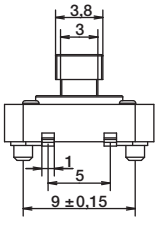

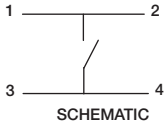

SCHEMATIC

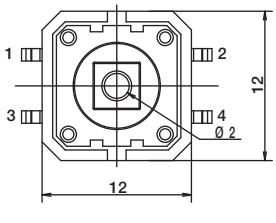

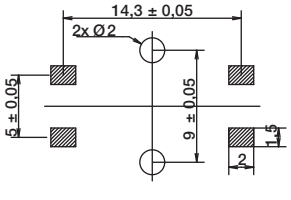

RECOMMENDED PCB LAYOUT

First Angle Projection

Dimensions are shown: mm
Specifications and dimensions subject to change

PTS125 Series
12 mm Tact Switches

THT VERSION WITH ROUND RIBBED ACTUATOR H= 12.0 MM

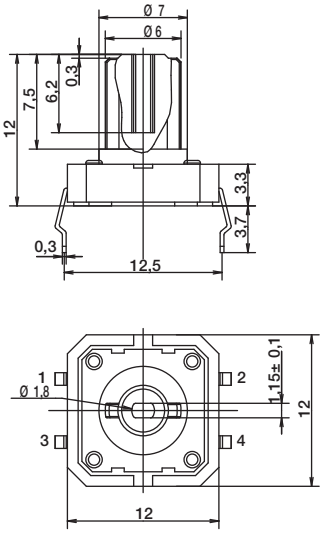

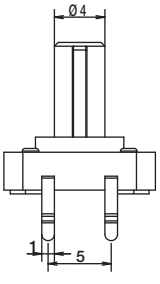

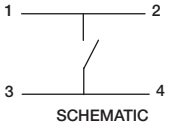

SCHEMATIC

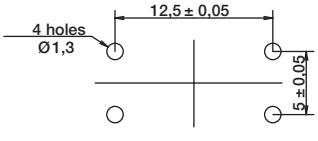

RECOMMENDED PCB LAYOUT

SMT VERSION WITH ROUND RIBBED ACTUATOR H= 12.0 MM

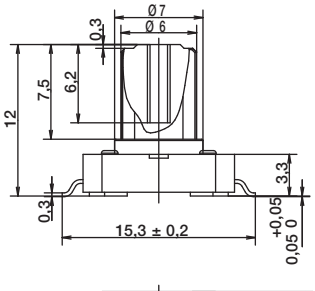

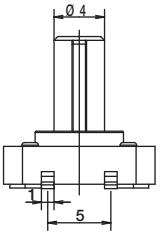

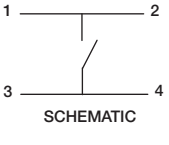

SCHEMATIC

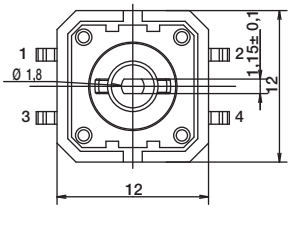

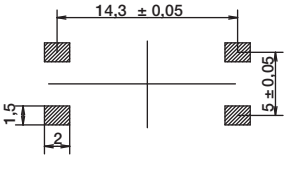

RECOMMENDED PCB LAYOUT

First Angle Projection

Dimensions are shown: mm
Specifications and dimensions subject to change

Features/Benefits

- *Vertical and right angle SMT models*
- *Vertical and right angle thru-hole models*
- *Multiple caps and legends*
- *Several LED colors and bi-color options*
- *RoHS compliant /compatible*

Typical Applications

- *Consumer electronics*
- *Server/storage*
- *Medical devices*
- *Test/Measurement/Instrumentation*
- *Audio/Video*
- *Computers/Peripherals*
- *Security*

NEW Right Angle SMT

Specification

FUNCTION: N.O. momentary action
TERMINALS: SMT & Thru-hole

Mechanical

OPERATING FORCE: 160 ± 50gf for V1; V2; V3; R1; R2 models
220 ± 50 gf for R3 model
OPERATING LIFE: 50,000 cycles (250m Ω max)
RECOMMENDED OPERATING STROKE: 0.25mm ± 0.1mm

Electrical

RATING: 50mA @ 12VDC
CONTACT RESISTANCE: <100m Ω (initial)
DIELECTRIC WITHSTANDING VOLTAGE:
>250VAC (50-60 Hz) between terminals - 1 min.Ω
INSULATION RESISTANCE: >100M Ω
BOUNCE TIME: <10ms

Packaging

Thru-hole: 200 pieces per tray
SMT: tape & reel (see V2 or V3 mounting style drawings)

Environmental

OPERATING TEMPERATURE: -25˚C to +70˚C
STORAGE TEMPERATURE: -25˚C to +80˚C

Process

SOLDERABILITY: Thru-hole - wave compatible
SMT - convection or IR reflow compatible

Materials

CONTACTS/TERMINALS:	Base metal; brass Plating; Ag
DOME:	Base metal: Phosphor bronze Plating; Ag

BASE: PA
ACTUATOR: PA
COVER: PA

Caps

Caps are ordered separately and shipped bulk. Thru-hole versions available with caps assembled under custom part number. Contact customer service for details.

How To Order

Our easy build-a-switch concept allows you to mix and match options to create the switch you need. To order, select desired option from each category and place it in the appropriate box.

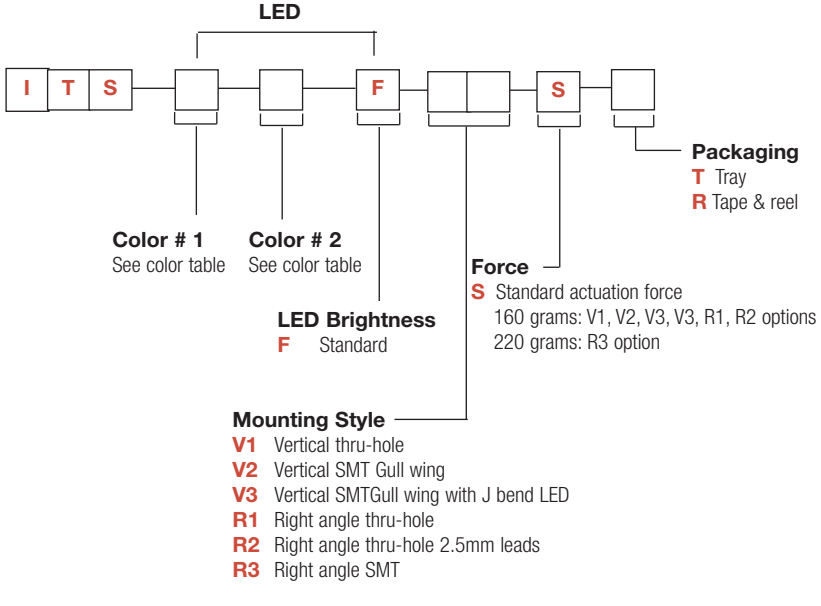

LED Color

00	No light
10	Red
12	Red/Yellow
13	Red/Green
14	Red/Blue
20	Yellow
21	Yellow/Red
23	Yellow/Green
30	Green
31	Green/Red
32	Green/Yellow
40	Blue
41	Blue/Red
50	White
60	True green

* Other colors available by request

Dimensions are shown: mm
Specifications and dimensions subject to change

ITS Series
Illuminated Tact Switch

LED COLOR / BRIGHTNESS

LED Characteristic	units	Standard LED Color Options					
		Red (1)	Yellow (2)	Green (3)	Blue (4)	White (5)	True Green (6)
Recommended Operating	mA @ 5VDC	20mA	20mA	20mA	20mA	20mA	20mA
Forward Current	mA	30 mA	30 mA	30 mA	30 mA	30 mA	30 mA
Peak Pulsing Current (1/8 duty @ 1kHz)	mA	125 mA	125 mA	125 mA	125 mA	125 mA	125 mA
Power Dissipation	mW	75 mW	75 mW	75 mW	108 mW	108 mW	108 mW
Forward Voltage @ 20mA	Volts	2.5 Volts Max.	2.5 Volts Max.	2.5 Volts Max.	3.6 Volts Max.	3.6 Volts Max.	3.6 Volts Max.
Dominant Wavelength @ 20mA	nm	637nm (Typical)	590nm (Typical)	570nm (Typical)	465nm (Typical)	CIE Coordinates X= 0.25 ˜ 0.33 Y= 0.24 ˜ 0.34	522nm (Typical)
Wavelength at Peak Emission @ 20mA	nm	645nm (Typical)	590nm (Typical)	573nm (Typical)	460nm (Typical)		515nm (Typical)
Spectral Half Bandwidth @ 20mA	nm	20nm (Typical)	20nm (Typical)	17nm (Typical)	25nm (Typical)		33nm (Typical)
Luminous Intensity @ 20mA	mcd	50mcd Minimum	125mcd Minimum	40mcd Minimum	100mcd Minimum	250mcd Minimum	500mcd Minimum
Viewing Angle at 50% LV (@10mA)	degrees	150˚ Typical	120˚ Typical	120˚ Typical	120˚ Typical	150˚ Typical	120˚ Typical

MOUNTING STYLES

V1 - Vertical Thru-hole

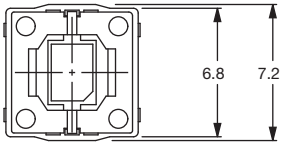

ELECTRICAL SCHEMATIC

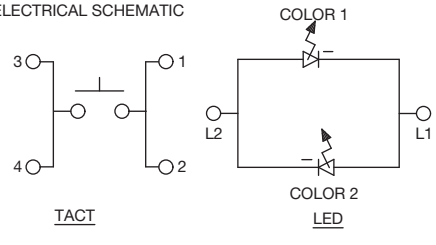

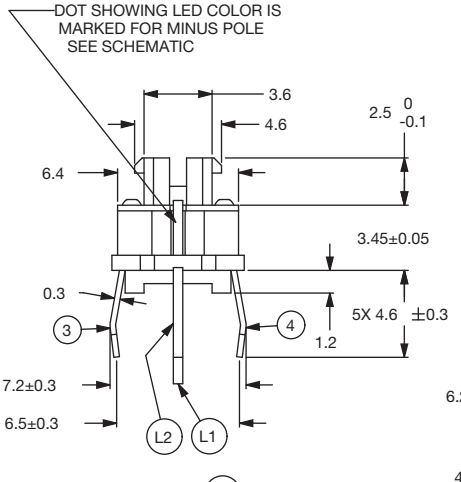

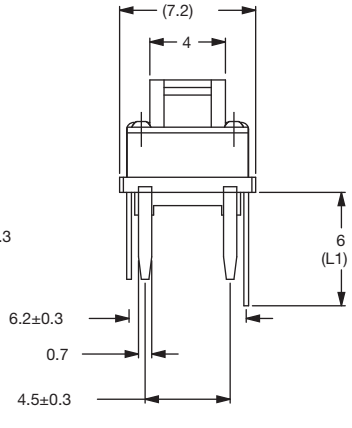

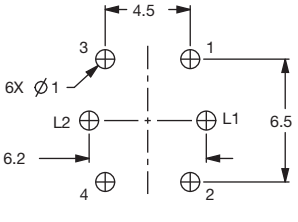

P.C.B. LAYOUT

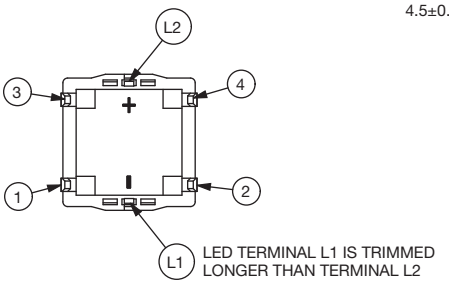

TRAY PACKAGING: 200 PIECES

Dimensions are shown: mm
Specifications and dimensions subject to change

MOUNTING STYLES

V2 - Vertical SMT; Gullwing

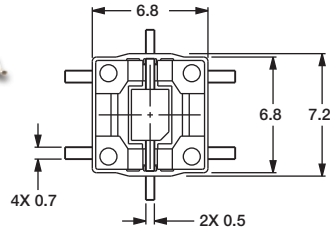

ELECTRICAL SCHEMATIC

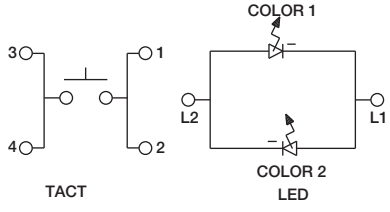

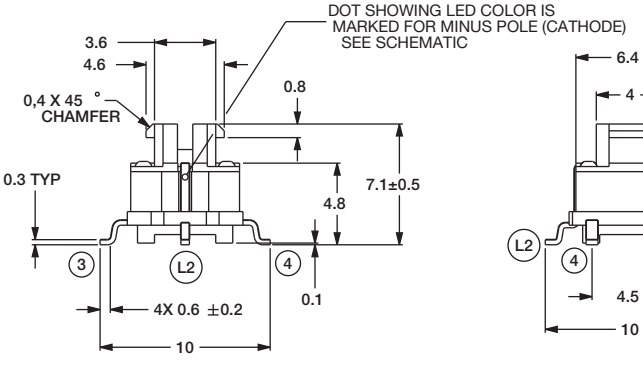

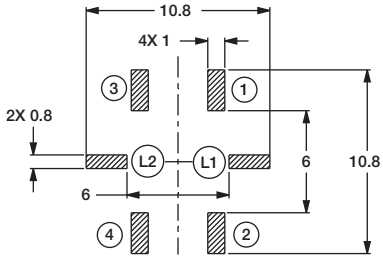

P.C.B .LAYOUT

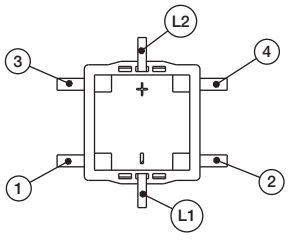

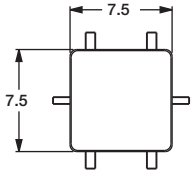

TAPE & REEL: 500 PIECES

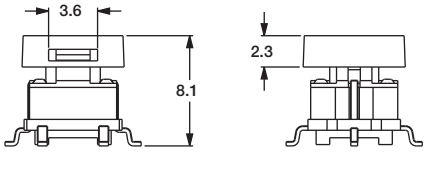

NOTES:
1. SWITCH WITH TEMPORARY PICK AND PLACE CAP.

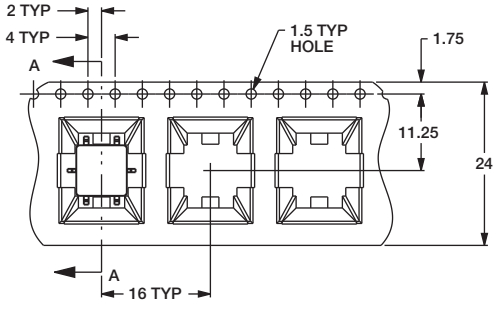

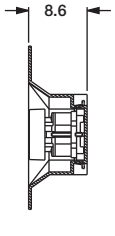

SECTION A-A

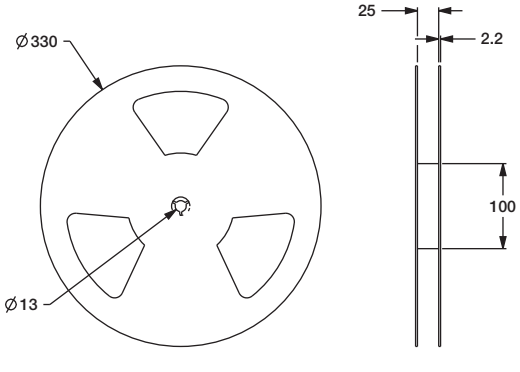

MOUNTING STYLES

V3 - Vertical SMT; Gull wing with J bend LED

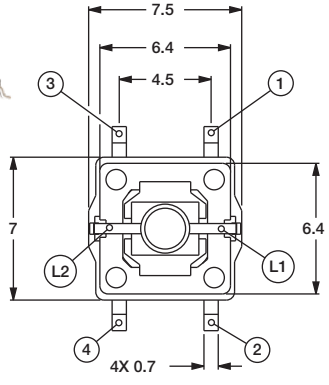

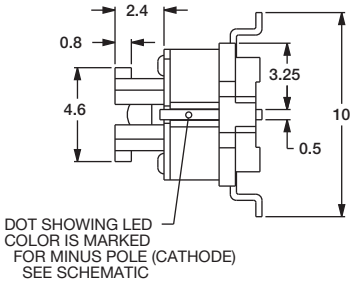

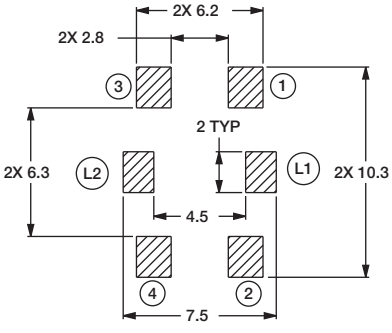

P.C.B. LAYOUT

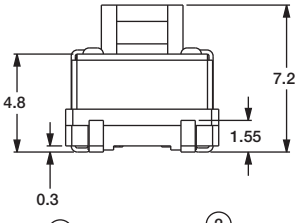

ELECTRICAL SCHEMATIC

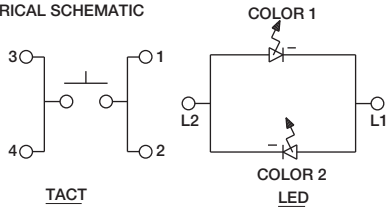

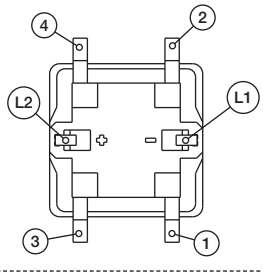

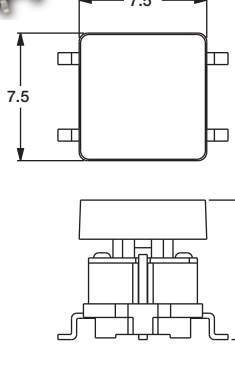

SCALE 3:1

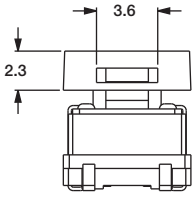

TAPE & REEL: 500 PIECES

NOTES:
1. SWITCH WITH TEMPORARY PICK AND PLACE CAP.

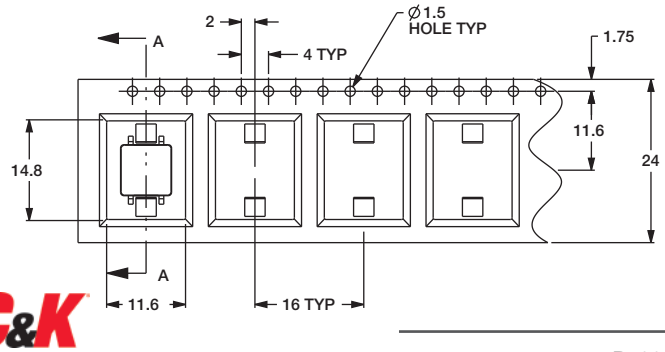

SECTION A-A

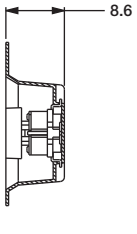

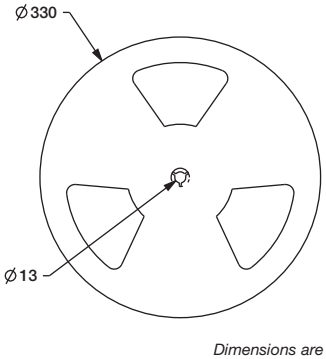

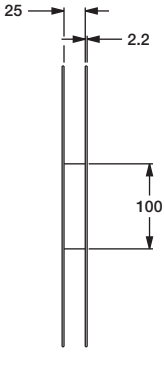

Dimensions are shown: mm
Specifications and dimensions subject to change

MOUNTING STYLES

R1 - Right Angle; Thru-hole

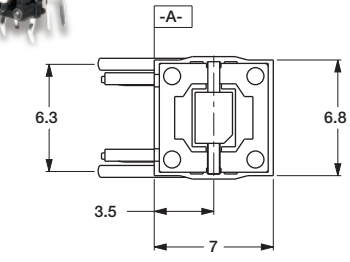

ELECTRICAL SCHEMATIC

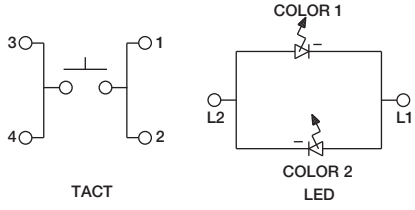

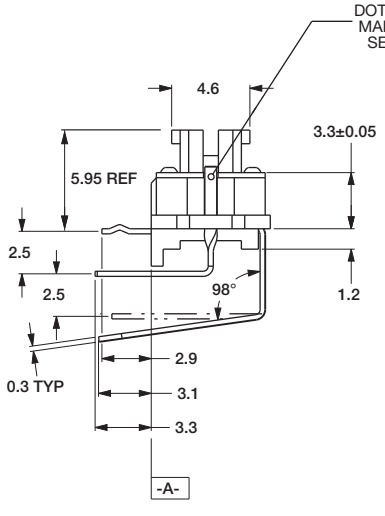

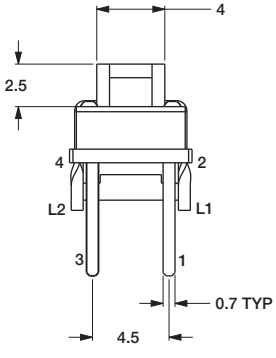

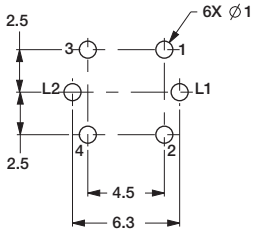

P.C.B. LAYOUT

TRAY PACKAGING: 200 PIECES

R2 - Right Angle; Thru-hole 2.5mm leads

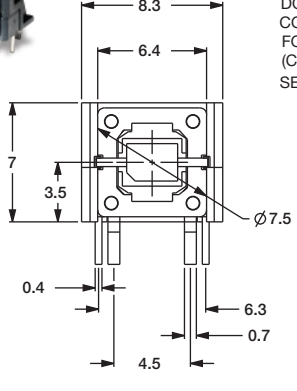

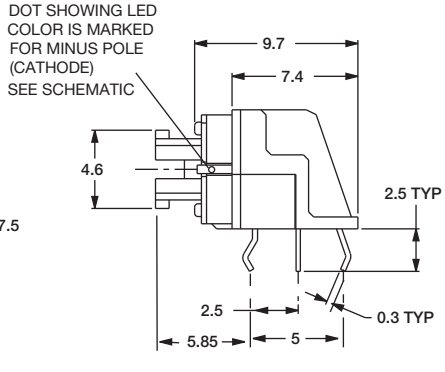

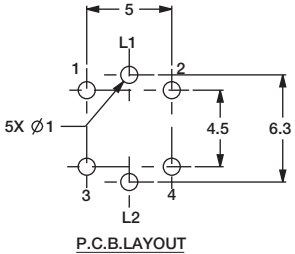

P.C.B.LAYOUT

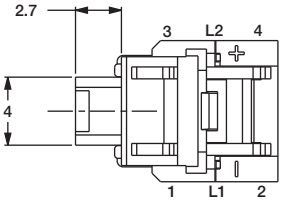

ELECTRICAL SCHEMATIC

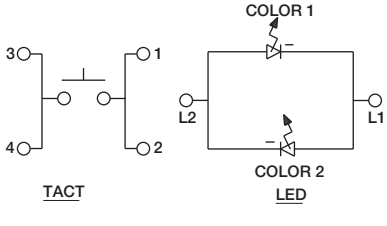

TRAY PACKAGING: 200 PIECES

MOUNTING STYLES

R3 - Right Angle, SMT

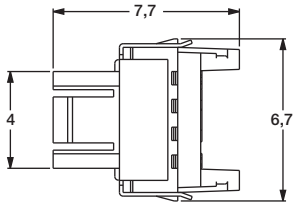

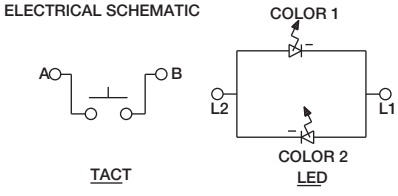

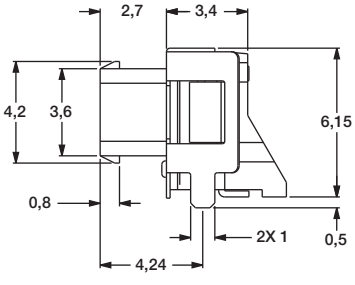

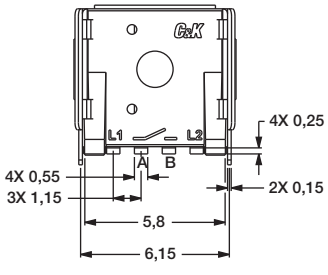

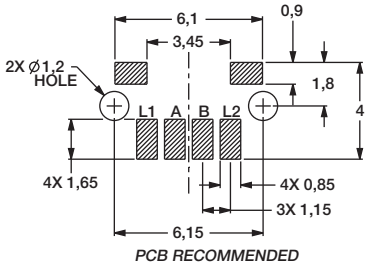

PCB RECOMMENDED

TAPE & REEL: 500 PIECES

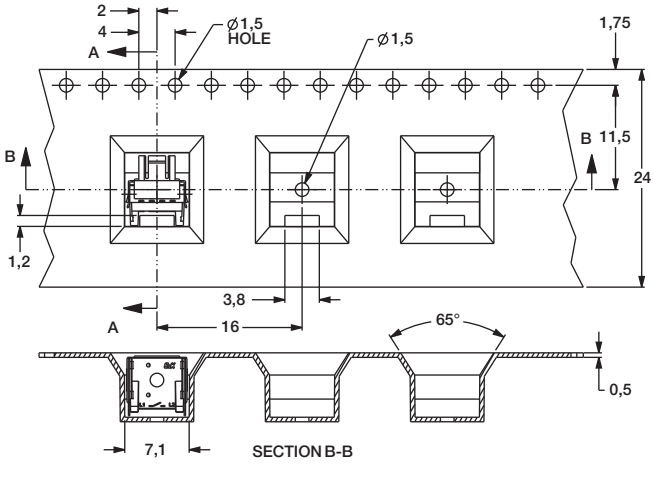

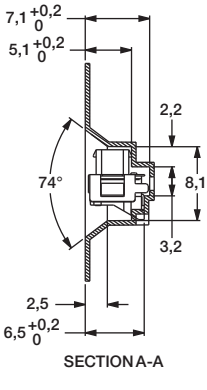

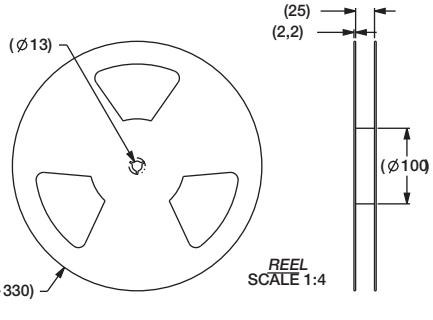

FORCE

OPTION CODE	FORCE
S	Standard 160 gf - V1, V2, V3, R1, R2 options 220 gf - R3 option

CAPS

Use the individual ordering code for each cap

399EA0000

Round cap, clear

3	9	9	E	A	0	0	0	0

Material
A Polycarbonate - Natural/Clear

Paint Color
0 No paint

Marking
00 No marking

Marking Color
0 No marking

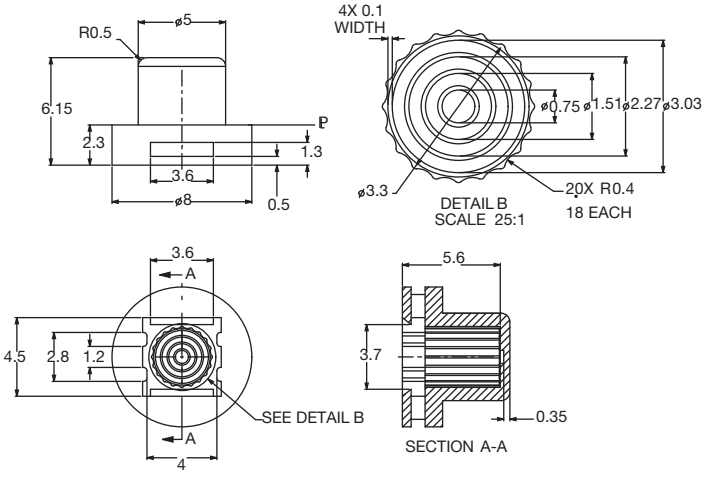

ITS Series
Illuminated Tact Switch

CAPS

400EA0000

Natural/clear

400EB0000

Translucent white, flat edge

400ECA01E

Matte silver paint laser etch, flat edge

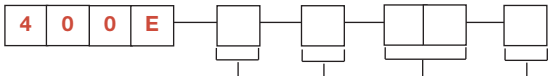

Material
- **A** Natural/Clear - polycarbonate
- **B** Translucent white - polycarbonate
- **C** Silver paint laser etch - polcarbonate

Paint Color
- **0** No paint
- **A** Matte silver

Laser Etch Marking
- **00** No marking
- **01** Power On/Off
- **04** Arrow right
- **05** Arrow left
- **06** Arrow up
- **07** Arrow down
- **09** Power
- **33** Arrow up (fill)
- **34** Arrow down (fill)
- **97** I/O

Marking Color
- **0** No marking
- **E** Laser etch (painted caps only)

ITSXXFR1ST &
400ECA01E cap

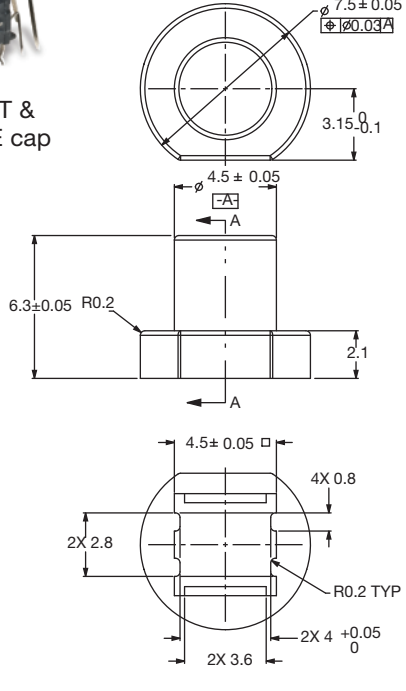

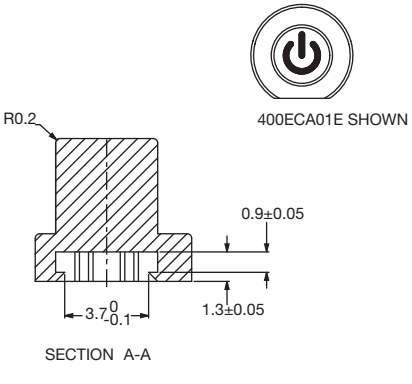

400E cap dimensions shown are "as molded" (no paint).

CAPS

401ECA06E

Matte silver paint, laser etch, tall oval

4	0	1	E						

Material
- **A** Natural/clear - polycarbonate
- **B** Translucent white - polycarbonate
- **C** Paint laser etch - polycarbonate

Paint Color
- **0** No paint
- **A** Matte silver

Laser Etch Marking
- **00** No marking
- **06** Arrow up
- **07** Arrow down
- **33** Arrow up (fill)
- **34** Arrow down (fill)

Marking Color
- **0** No marking
- **E** Laser etch (painted caps only)

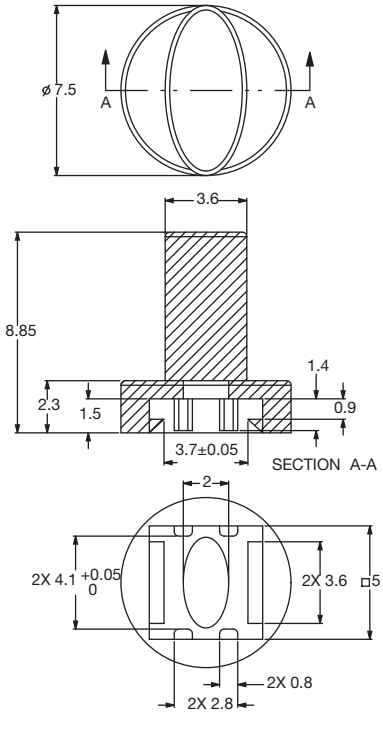

401E cap dimensions shown are "as molded" (no paint).

Navigation Switches
Product Selection Guide

Navigation		
Series	**TSW**	**CS**
Number of directions	3 7	4
Size on PCB L x W (mm)	ø 21 ø 34,4	40 x 40
Total Height (mm)	3,5 6,0	58
Actuation Force (N)	2,2 to 3,0 scanning and select, 0.5N cm rotation	4,9N
Contact Type	Silver	NA
Max. Voltage (VDC)	10	12
Max. Switching Power (A)	0.001	0.2
Life Cycles/ per way	1,000,000	10,000
Sealing	Not sealed	Not sealed
Page Number	C–3	C–6

TSW Series
3 or 7 Function Tact and Scroll Wheel

Features/Benefits

- ***Compact and slim***
- ***Multiple function in one component (rotary, select)***
- ***Easy installation***
- ***Through hole termination***
- ***Integrated decoration (B type)***

Typical Applications

- ***Remote controls***
- ***Desk phones***
- ***Keyboards***
- ***Printers***
- ***Entertainment systems***
- ***White goods***

Operation Characteristics

OPERATING FORCE: See chart below
24 detent - 12 pulses/360˚

Specifications

INITIAL CONTACT RESISTANCE: Max. 300mΩ
INSULATION RESISTANCE: Min. 100 MΩ (100 VDC)
RATING: 1mA 10 VDC
LIFE CYCLE: See chart below
OPERATING FREQUENCY:
Rotation - Max. 30 operations per minute
Push - Max. 120 operations per minute
Depression - Max. 300 gf

Environmental

OPERATING TEMPERATURE: 0˚C / 40˚C
STORAGE TEMPERATURE: -40˚C / 70˚C
VIBRATION RESISTANCE: 10 ~ 55 Hz, displacement 0.75mm (p-p)
SHOCK RESISTANCE: Destruction 1,000 m/s² (approx. 100G) max.
WAVE SOLDERING: Max. 260˚C for 5 seconds
HAND SOLDERING: Max. 260˚C for 5 seconds

Designation	Number of Circuits	Rotation Actuation Force	Push Actuation Force	Cycle Life Rotation (per direction)	Cycle Life Push
TSWA	3	Max. 60g - cm	220g ± 50g	1,000K cycles	1,000K cycles
TSWB	5	Max. 50g - cm	Max 300g	1,000K cycles	1,000K cycles

Part Number	Description	Tray	Box
TSWA-3N-C LFS	Base switch with jog and select, no decoration	80	160
TSWA-3N-CB11 LFS	Base switch with jog and select, white central button, white dial	65	130
TSWA-3N-CD23 LFS	Base switch with jog and select, black central button, grey dial	30	60
TSWB-3N-CB111 LFS	Central select with jog and 4 directions, white central button, dial & direction ring	30	60
TSWB-3N-CB222 LFS	Central select with jog and 4 directions, black central button, dial & direction ring	30	60

TSWA-3N-C LFS

Base switch with jog and select, no decoration

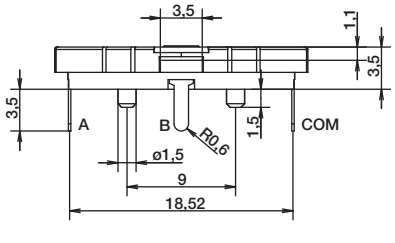

COVER DESIGN GUIDELINE

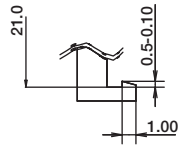

CONTACT CONFIGURATION

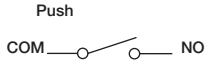

Rotation output waveform

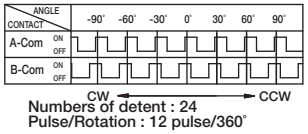

Numbers of detent : 24
Pulse/Rotation : 12 pulse/360˚

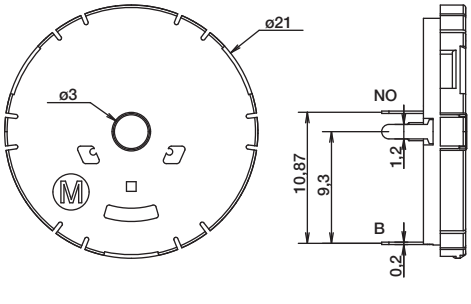

PCB LAYOUT / COMPONENT SIDE

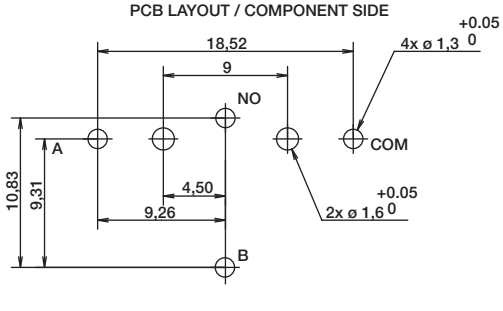

Dimensions are shown: mm
Specifications and dimensions subject to change

TSWA-3N-CB11 LFS

Base switch with jog and select, white central button, white dial

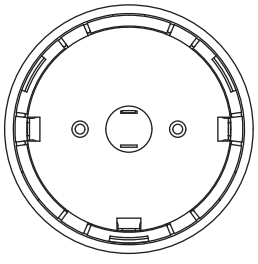

CONTACT CONFIGURATION

Push

Rotation output waveform

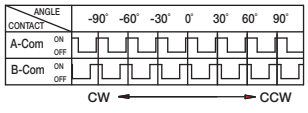

Numbers of detent : 24

Pulse/Rotation : 12 pulse/360˚

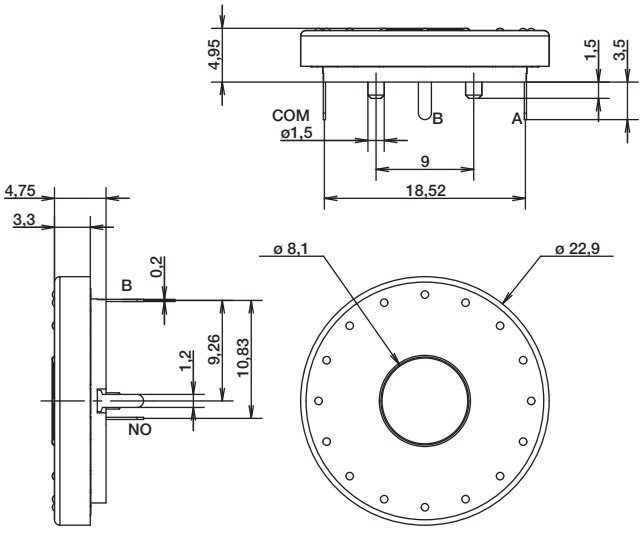

PCB LAYOUT / COMPONENT SIDE

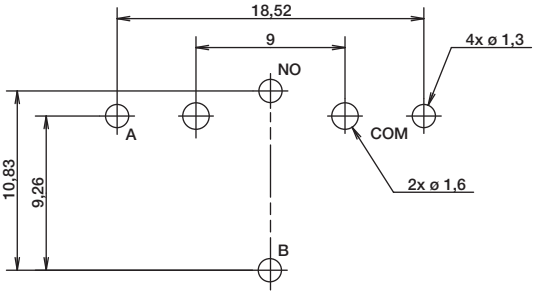

TSWA-3N-CD23 LFS

Base switch with jog and select, black central button, grey dial

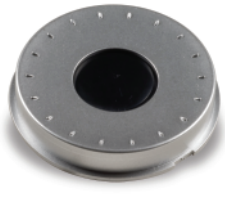

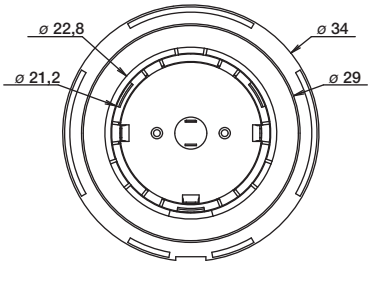

CONTACT CONFIGURATION

Push

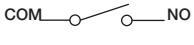

Rotation output waveform

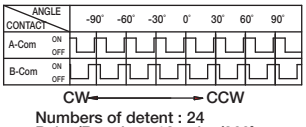

Numbers of detent : 24
Pulse/Rotation : 12 pulse/360˚

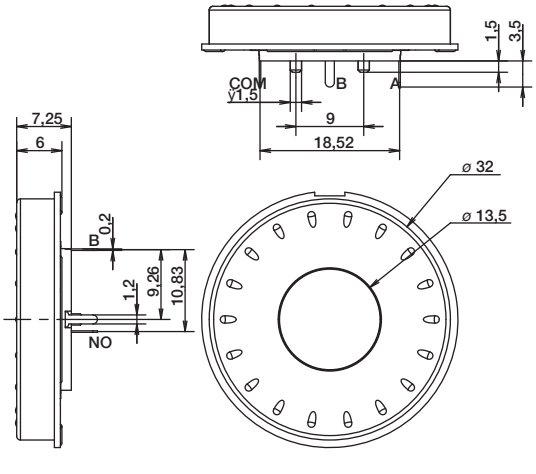

PCB LAYOUT / COMPONENT SIDE

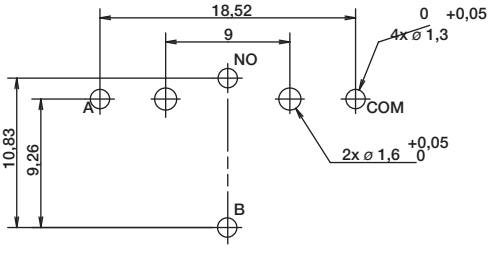

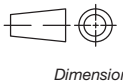

First Angle Projection

Dimensions are shown: mm
Specifications and dimensions subject to change

TSWB-3N-CB111 LFS Central select with jog and 4 directions, white central button, dial & direction ring

TSWB-3N-CB222 LFS Central select with jog and 4 directions, black central button, dial & direction ring

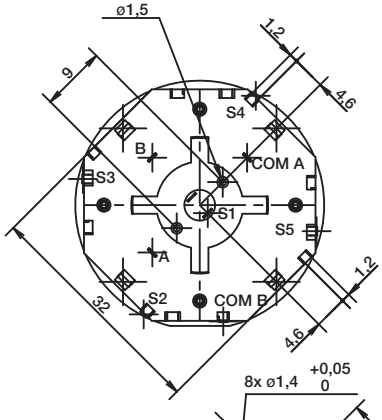

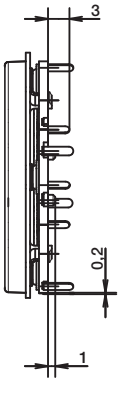

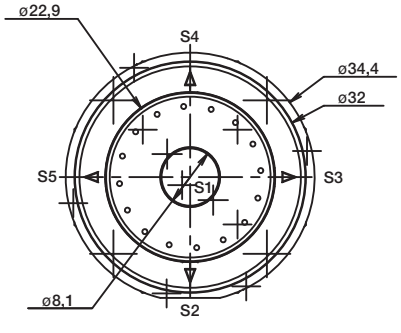

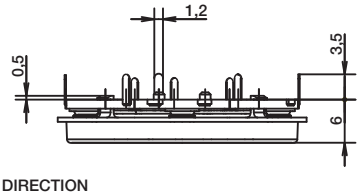

ELECTRICAL FUNCTION

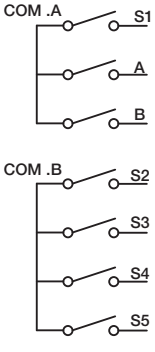

PCB LAYOUT
COMPONENT SIDE

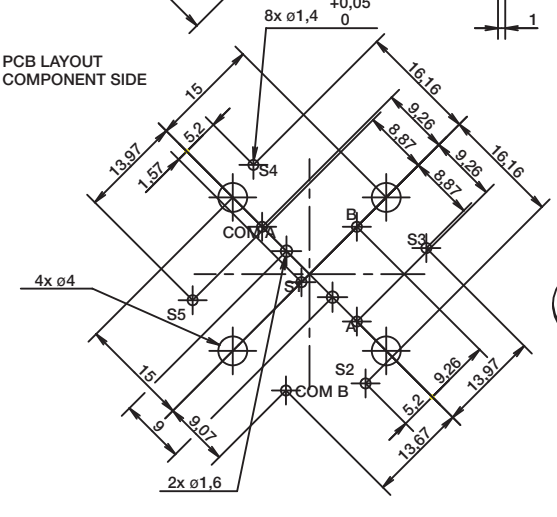

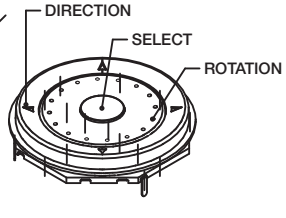

Rotational Output Waveform

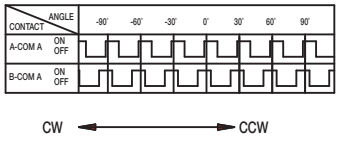

Numbers of detent : 24

Pulse/Rotation : 12 pulse/360°

First Angle Projection

Dimensions are shown: mm
Specifications and dimensions subject to change

CS-41001E Series
4-way Adjustable Direction Switch

Features/Benefits

- ***Designed for mirror control***
- ***Wire harness and connector easy to customize***
- ***4-way adjustable directions***

Typical Applications

- ***Automotive***
- ***Industrial***

Specifications

CONTACT RATING: 0.2 A @ 12 VDC
OPERATING LIFE: 10,000 cycles
INSULATION RESISTANCE: 10 M Ω min. @ 500 VDC
DIELECTRIC STRENGTH: 500 V AC
OPERATING TEMPERATURE: –40ºC to +90ºC
OPERATING FORCE: L- OFF, R-OFF; 200 ±100 gf
OFF-L, OFF-R; 400 ± 200 gf
4 Direction; 500 ± 200 gf

Materials

KNOB: ABS
COVER: ABS
TERMINAL: Brass, tin plated

NOTE: Specifications and materials listed above are for switches with standard options. For information on specific and custom switches, consult Customer Service Center.

PART NUMBER	PACKAGING
CS-41001-E	256 pieces

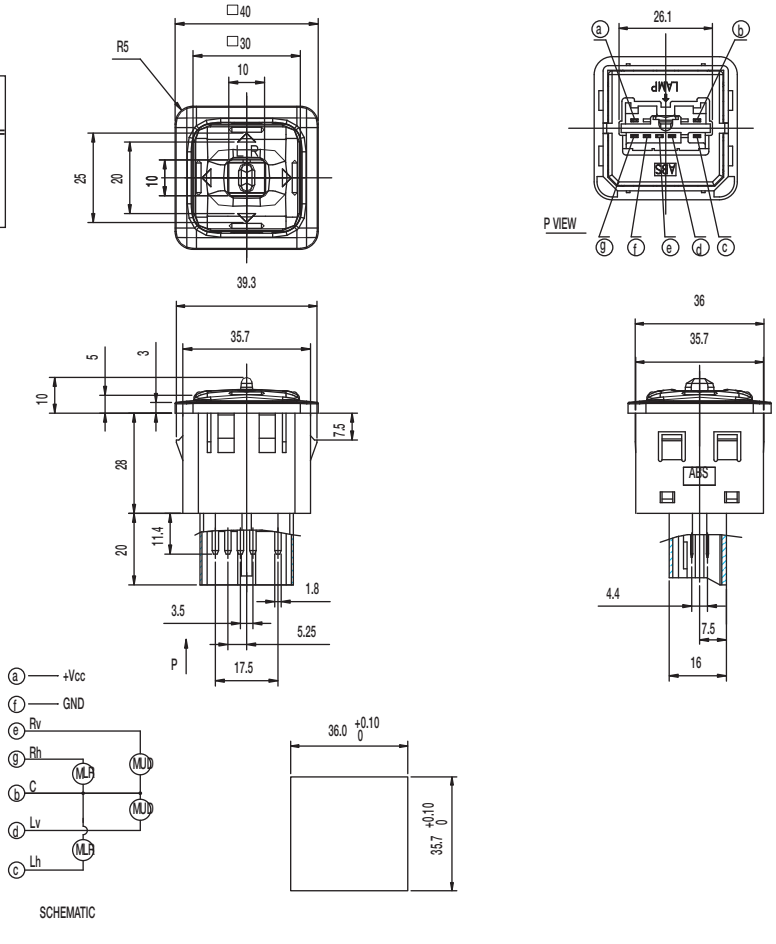

Key Switches
Product Selection Guide

Key Switches					
Series	**K6**	**K12S**	**K12**	**PVA**	**PVB**
Size (mm) L x W x H	7,4 x 10,9 x 8,4	12 x 11,6 x 9,1	12 x 12 x 11	9,2 x 10 x 13,5	PVB4: 9,4 x 9 x 12,5 PVB6: 9,85 x 8,6 x 12,5
Poles/Throws	SPST momentary	SPST / DPST momentary	SPST 2 x SPST momentary	DPST / DPDT momentary or push-on/push off	SPDT PVB4 DPDT PVB6
Maximum Load	30 V / 100 mA	30 V / 100 mA	30 V /100 mA	32 V / 100 mA	14 V / 100 mA or 200 mA
Operating Force	2 N; 3 N; 5 N	3 N; 5 N; 6 N 9 N; 4/8 N; 6/12 N	1,5 N; 2,5 N; 3,5 N; 5 N 3,5/7 N; 6/12 N	1,2 N; 1,7 N; 3,5 N	3 N
Travel (standard)	1,5 mm	1,5 mm	1 mm, 1,5 mm, 2 mm	Mom. 2,4 mm Push-push 2,4/1,5mm	Mom. 2,3 mm Push-push 2,3/1,5mm
Life Cycle	200,000	1,000,000	1,000,000	100,000	PVB4: 100,000 PVB6: 30,000
Sealed		IP40/IP67	K12C only		
Illumination	•	•	•		
Termination	SMT/ Thru-hole	SMT	Thru-hole	Thru-hole	SMT / Thru-hole
Page Number	D-3	D-6	D-9	D-15	D-18

Key Switches	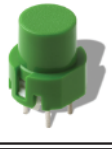	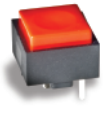			
Series	**D6**	**KS**	**Digitast**	**ED /EDM**	**KBD**
Size (mm) L x W x H	12 x 11,4 x 14,5	12,4 x 12,4 x 9,9	17,1x12,3 x 14,3	12,7 x 11,3 x 1,2	15,6 x 15,6 x 15
Poles/Throws	SPST momentary	SPST SPDT	SPDT momentary or push-on/push off	SPST momentary	SPST momentary
Maximum Load	32 V/100 mA*	50 V/25 mA	24 V / 10 mA	100 V/100 mA	12 VDC /10 mA
Operating Force	1,3 N 2,75 N		1,5 N	2,4 N to 6,5N	45gf / 55gf / 60gf 0,4N / 0,5N / 0,6N
Travel (standard)	1 mm 1.10 mm	0,71 mm	3 mm	0,3 mm	1,5 ~ 2 mm
Life Cycle	250,000	100,000	5,000,000	1,000,000	50,000,000
Sealed				•	•
Illumination			•		
Termination	Thru-hole	Thru-hole	Thru-hole	Thru-hole/SMT	Thru-hole
Page Number	D-23	D-26	D-29	D-32	D-34

* Maximum value are for voltage and current separately

Dimensions are shown: mm
Specifications and dimensions subject to change

Features/Benefits

- *Excellent tactile feel*
- *Wide variety of LED's, travel and actuation forces*
- *Designed for low-level switching*
- *Detector version available*
- *RoHS compliant*

Typical Applications

- *Automotive*
- *Industrial electronics*
- *Computers and network equipment*

Construction

FUNCTION: momentary action
CONTACT ARRANGEMENT: 1 make contact = SPST, N.O.
DISTANCE BETWEEN BUTTON CENTERS:
min. 7,5 and 11,8 (0.295 and 0.465)
TERMINALS: Snap-in pins, tinned
MOUNTING: Soldered by PC pins, locating pins
PC board thickness: 1,5 (0.0591)

Mechanical

TOTAL TRAVEL/SWITCHING TRAVEL: 1,5/0,9 (0.059/0.035)
PROTECTION CLASS: IP 40 according to DIN/IEC 529

1) Voltage rise: 300 V/s
2) According to DIN 41640; IEC 512-2
3) Higher values upon request

Packaging

THT: bulk in boxes of 500 pieces
SMT: bulk in boxes of 500 pieces
reels of 500 pieces (with LED) or 750 pieces (without LED)

Electrical

SWITCHING POWER MIN./MAX.: 0.02 mW / 3 W DC
SWITCHING VOLTAGE MIN./MAX.: 2 V DC / 30 V DC
SWITCHING CURRENT MIN./MAX.: 10 mA /100 mA DC
DIELECTRIC STRENGTH (50 Hz)[1) 2)]: ≥ 300 V
OPERATING LIFE: ≥ 2 x 10^5 operations [3)]
≥1 X 10^5 operations for SMT version
CONTACT RESISTANCE: Initial ≤ 50 mΩ
INSULATION RESISTANCE: ≥ 10^{10} Ω
BOUNCE TIME: ≤ 1 ms
Operating speed 100 mm/s (3.94/s)

Environmental

OPERATING TEMPERATURE: -40˚C to 85˚C.
STORAGE TEMPERATURE: -40˚C to 95˚C.

Process

SOLDERABILITY:
THT: wave soldering, compatible with lead free soldering profile
Hand soldering, 350˚C for 3s
SMT: not compatible with lead free reflow profile
245˚C for 5s

How To Order

Our easy build-a-switch concept allows you to mix and match options to create the switch you need. To order, select desired option from each category and place it in the appropriate box.

Note: Some of the configurations may not be available or could require some development.

K 6 [ ][ ] — [ ][ ] — 1.5 — [ ][ ] — [ ][ ][ ][ ][ ] — [ ][ ]

Series
K6B
K6BL with LED
K6S SMT (with metallic frame)
K6SL SMT with LED (with metallic frame)

LED*
NONE Models without LED
GN Green
YE Yellow
OG Orange
RD Red
WH White
BU Blue

Travel
1.5 1,5mm (0.059)

Operating Force
3N 3 N 300 grams
5N 5 N 500 grams
2N OD 2 N 200grams without snap-point

Standard LED Code
NONE Models without LED
LV306 Green
LV327 Yellow
LV315 Orange
LV352 Red
LV302 White
LV328 Blue

Frame Option
(for K6B and K6BL)
SD Metallic frame

* Additional LED colors available by request.

K6
Miniature Key Switches

SERIES

K6B WITHOUT LED
K6BL WITH LED

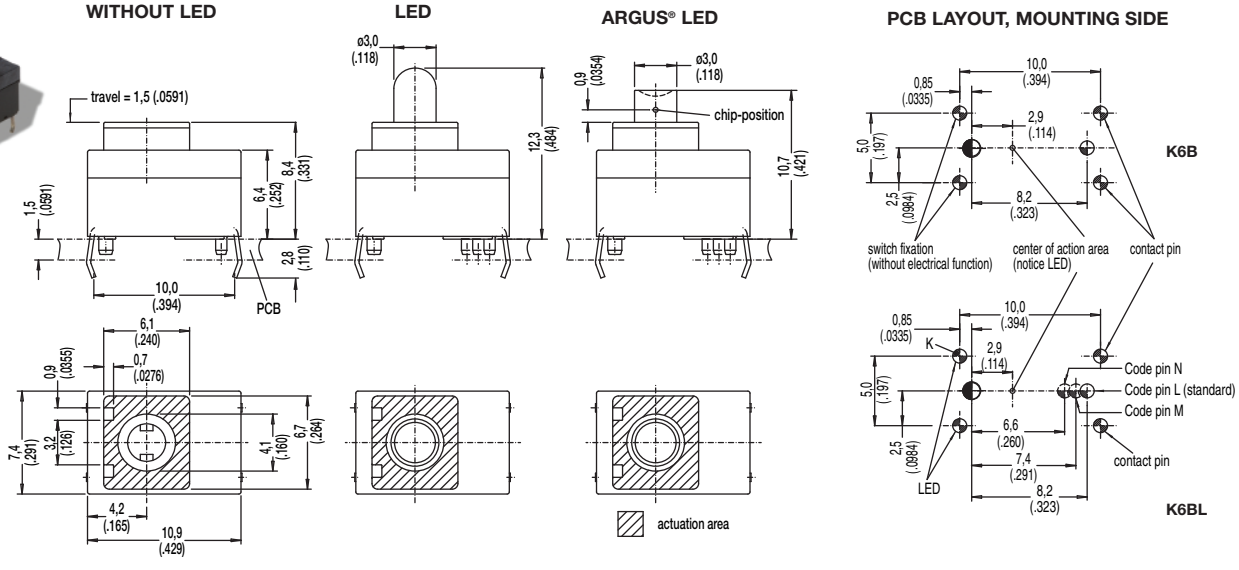

SCHEMATIC	
K6B	K6BL

Hole	Ø	Without LED	With LED	Description	Terminal Section	Surface
	1,2+0,1 (.0471+.00349)	1x	1x	center hole		
	0,9+0,1 (.0354+.00349)	1x	1x	code (L,M,N)		
	1,0+0,1 (.0354+.00349)		2x		0.6 x 0.3 (.0236 x .0118)	SnPb
		4x	2x	LED switch		

K6S WITHOUT LED
K6SL WITH LED

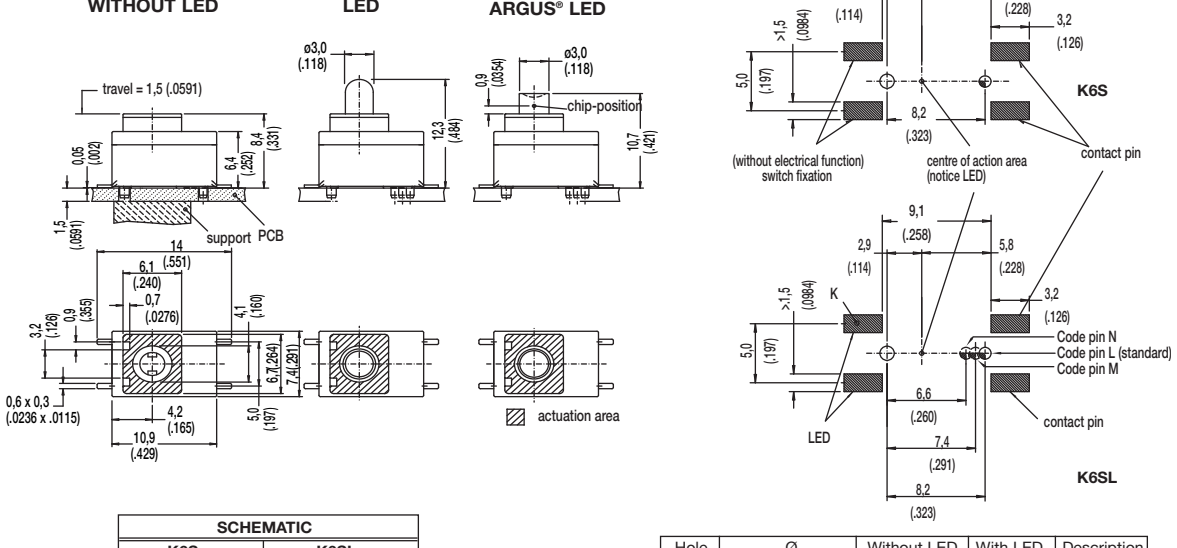

SCHEMATIC	
K6S	K6SL

Hole	Ø	Without LED	With LED	Description
	1,2+0,1 (.0471+.00349)	1x	1x	center hole
	0,9+0,1 (.0354+.00349)	1x	1x	code (L,M,N)

First Angle Projection

Dimensions are shown: mm
Specifications and dimensions subject to change

LED

OPTION CODE	COLOR
NONE	Models without LED
GN	Green
YE	Yellow
OG	Orange
RD	Red
WH	White
BU	Blue

STANDARD LED CODE	COLOR
NONE	Models without LED
LV306	Green
LV327	Yellow
LV315	Orange
LV352	Red
LV302	White
LV328	Blue

Additional LED colors available by request

TRAVEL

1.5 1.5 MM

OPERATING FORCE

OPTION CODE	OPERATING FORCE
3N	3 N, 300 g
5N	5 N, 500 g
2N OD	2 N, 200g without snap-point

FRAME OPTION

SD METALLIC FRAME (OPTION FOR K6B AND K6BL)

NOTE: K6S and K6SL are equiped with metallic frame (SD not specified)

First Angle Projection

Dimensions are shown: mm
Specifications and dimensions subject to change

K12S
High Performance SMT Key Switches

Features/Benefits

- ***Harsh environment applications - IP67***
- ***Compatible with SMT lead free soldering process***
- ***Illuminated***
- ***Excellent tactile feel***
- ***High reliability / long life***
- ***DPST and detect versions available***
- ***RoHS compliant***

Typical Applications

- ***Automotive***
- ***Off-road transportation***
- ***Motorcycles***
- ***Industrial***
- ***Medical***
- ***Network***
- ***Joysticks***

Construction:

FUNCTION: Momentary
CONTACT ARRANGEMENT: SPST or DPST
CONTACT TYPE: NO or NC
TERMINALS: SMT

Mechanical

TOTAL TRAVEL: 1,5 mm
OPERATING FORCE: 3N; 5N; 6N; 9N 4/8 N; 6/12 N
SEALING: IP40 or IP67

Packaging

Reels of 900 pieces

Electrical

SWITCHING POWER MIN./MAX.: 0.02mW/3 W DC
SWITCHING VOLTAGE MIN./MAX.: 2 V / 30 V DC
SWITCHING CURRENT MIN./MAX.: 10 mA /100 mA DC
DIELECTRIC STRENGTH: > 300 V RMS
OPERATING LIFE: > 10^6 operations (F<5N) / 10^5 operations (F≥5N)
CONTACT RESISTANCE: Initial < 100mΩ - After test < 250mΩ
INSULATION RESISTANCE: >10^9 Ω
BOUNCE TIME: < 10 ms

Environmental

OPERATING TEMPERATURE: -40˚C to 85˚C.
STORAGE TEMPERATURE: -40˚C to 95˚C.
RoHS compliant and Halogen free.

Process

SOLDERABILITY: Lead free soldering compatible.

How To Order

Our easy build-a-switch concept allows you to mix and match options to create the switch you need. To order, select desired option from each category and place it in the appropriate box.

K 1 2 S [ ] — [ ] — [ ][ ][ ] — 1 . 5 — [ ][ ][ ] N — [ ][ ] — L F T X

Sub-Series
- **A** IP40 with peg
- **B** IP67 with peg
- **C** IP40 without peg
- **D** IP67 without peg

Option
- **S** SPST version
- **L** LED version (SPST)
- **D** DPST version

LED Color
- **NONE** No LED
- **YE0** Yellow
- **RD0** Red
- **GN0** Green
- **OR0** Orange
- **WH0** White
- **AM0** Amber

Travel
- **1.5** 1.5 mm

Operating Force
- **3N** 3 N
- **5N** 5 N
- **6N** 6 N
- **9N** 9 N
- **4/8N** 4/8 N (double step actuation)
- **6/12N** 6/12 N (double step actuation)

Contact Arrangement
- **O** Normally open (SPST)
- **C** Normally closed (SPST)
- **OO** 2 Normally open (DPST)
- **CC** 2 Normally closed (DPST)
- **OC** 1 Normally open 1 Normally closed (DPST)

LFTX Lead free, RoHS terminals tin plated Translucent button

K12SA/K12SC IP40 with peg / IP40 without peg

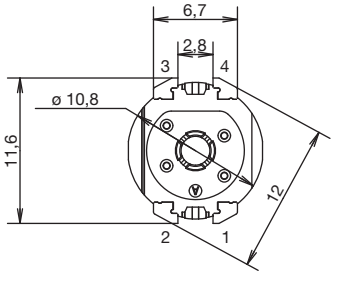

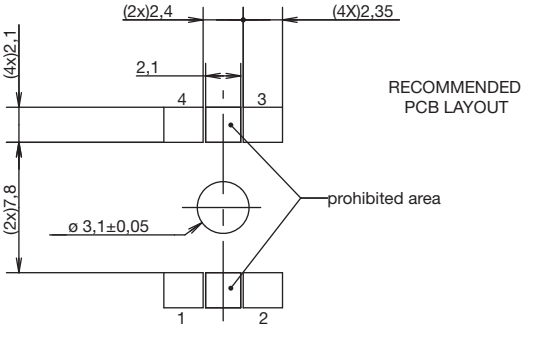

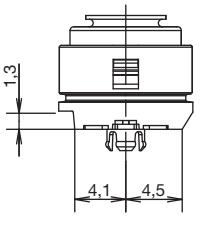

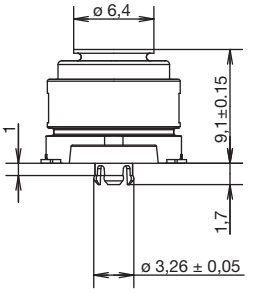

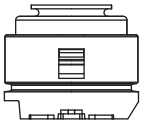

Without Peg

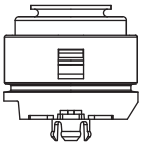

With Peg

K12SB / K12SD IP67 with peg / IP67 without peg

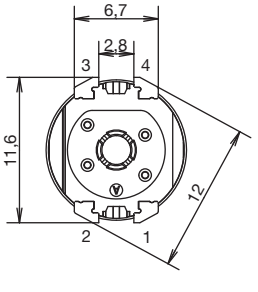

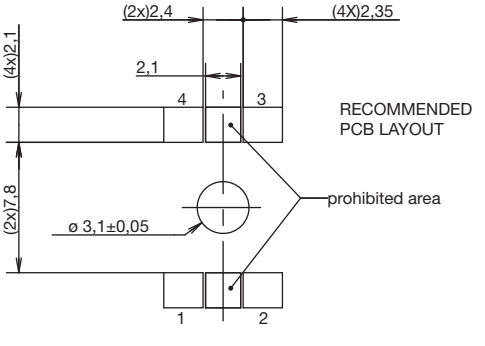

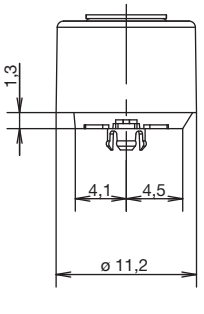

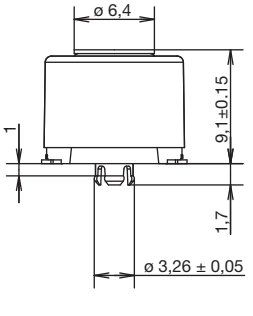

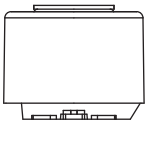

Without Peg

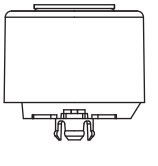

With Peg

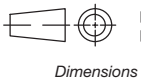

First Angle Projection

Dimensions are shown: mm
Specifications and dimensions subject to change

K12S
High Performance SMT Key Switches

OPTION

S SPST version

Single NO

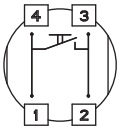

Single NC

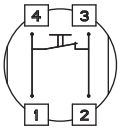

L LED version

Single NO + LED

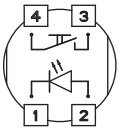

Single NC + LED

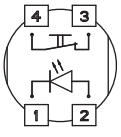

D DPST version

Double NO

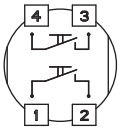

Double NC

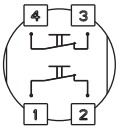

LED COLOR

OPTION CODE	LED COLOR
	No LED
YE0	Yellow
RD0	Red
GN0	Green
OR0	Orange
WH0	White
AM0	Amber

TRAVEL

1.5 1.5 mm

OPERATING FORCE

OPTION CODE	OPERATING FORCE
3N	3N
5N	5N
6N	6N
9N	9N
4/8N	4/8N (double step actuation)
6/12N	6/12N (double step actuation)

CONTACT ARRANGEMENT

O Normally open (SPST and LED versions)

C Normally closed (SPST and LED versions)

OO 2 Normally open (DPST version)

CC 2 Normally closed (DPST version)

OC(1) 1 Normally open/ 1 Normally closed (DPST)

(1) Please contact Technical support for this configuration using the "Ask a Specialist"option on the K12S product web page.

TAPE AND REEL

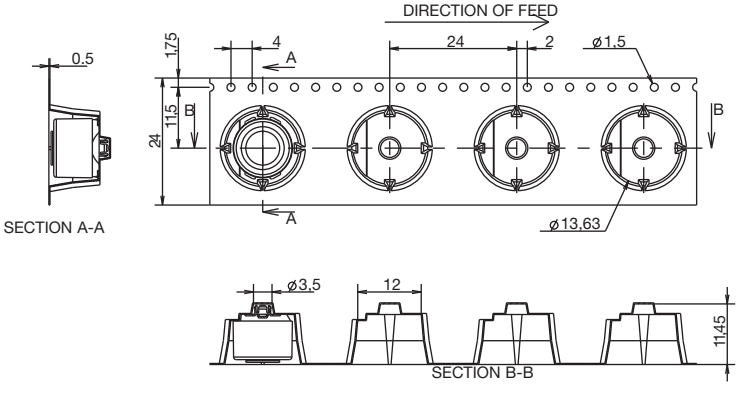

Dimensions are shown: mm
Specifications and dimensions subject to change

High Performance Key Switches

Features/Benefits

- *Excellent tactile feel*
- *Wide choice of LED colors, travel and actuator forces*
- *High reliability / long life*
- *Sealed version available*
- *Designed for low-level switching*
- *Double stroke version available*
- *Detector version available*

Typical Applications

- *Automotive*
- *Off-road transportation*
- *Industrial electronics*
- *Computers & network equipment*
- *Joysticks*

Construction:

FUNCTION: momentary
DISTANCE BETWEEN BUTTON CENTERS:
min. 11 (0.433) K12C = 13 (0.512)
TERMINALS: PC pins, tinned
MOUNTING: Locating pins; K12G and K12P additionally with snap-in housing

Mechanical

TOTAL TRAVEL: 1 mm, 1,5 mm, 2 mm
SWITCHING TRAVEL: 0,6 mm*
OPERATING FORCE: 1.5 N OD without snap-point as detector switch, 2.5 N, 3.5 N, 5 N, 3.5/7 N, 6/12 N. Additional operating force 7N, 9N and 20N, available on request.
PROTECTION CLASS: K12C IP 67 (dust tight, protected against the effects of immersion in water; other versions IP 40)

* Additional switching travel (with pre-travel) available by request.

Packaging

Bulk in boxes of 250 pieces (version C or GO) or 300 pieces (version A, AL, P or PL)

Electrical

SWITCHING POWER MIN./MAX.: 0.02mW/3 W
SWITCHING VOLTAGE MIN./MAX.: 2 V DC / 30 V DC
SWITCHING CURRENT MIN./MAX.: 10 mA /100 mA
DIELECTRIC STRENGTH (50 Hz, 1 min): ≥ 500 V
OPERATING LIFE with max. switching power: ≥ 10^6 operations
K12G & K12GO; operating life of second switch 5 x 10^4 operations, operating life K12C and version with more than 6N (7N, 9N 20N) please consult factory.
CONTACT RESISTANCE: Initial ≤ 50 mΩ
INSULATION RESISTANCE: ≥ 10^{10} Ω
BOUNCE TIME: ≤ 1 ms
Operating speed 100 mm/s (3.94/s)

Environmental

OPERATING TEMPERATURE: -40˚C to 85˚C.
STORAGE TEMPERATURE: -40˚C to 95˚C.

Process

SOLDERABILITY:
Wave soldering, compatible with lead free soldering profile
Hand soldering, 350˚C

How To Order

Our easy build-a-switch concept allows you to mix and match options to create the switch you need. To order, select desired option from each category and place it in the appropriate box.

Note: Some of the configurations may not be available or could require some development.

K | 1 | 2 | ☐☐ — ☐☐ — ☐☐ — ☐☐ — ☐☐ — ☐☐☐☐☐ — ☐☐

Series

K12A	No snap-in pegs
K12AL	No snap-in pegs with central LED
K12P	With snap-in pegs
K12PL	With central LED
K12C	Sealed contact with rubber cap (IP 67)
K12GO	Two-step switch

Cap Color

NONE	version with LED, version C
BK	Black cap – No LED
YE	Yellow cap - No LED
RD	Red cap – No LED
GY	Gray cap – No LED

LED Color

NONE	No LED
GN	Green
YE	Yellow
OG	Orange
RD	Red
WH	White
BU	Blue

Travel*

1	1 mm (0.039)
1.5	1.5 mm (0.059)
2	2 mm (0.079)

Operating Force***

1.5N OD	1.5 N without snap-point
2.5N	2.5 N
3.5N	3.5 N
5N	5 N
3.5/7N	3.5/7 N**
6/12N	6/12 N**

Standard LED Code

NONE	No LED
LV306	Green
LV327	Yellow
LV315	Orange
LV352	Red
LV302	White
LV328	Blue

Contact Arrangement

NONE	SPST NO (STD)
1R	SPST NC (Special request)

* K12C – 1mm MAX
K12 with LED – 1.5 mm MAX
** K12G & K12GO version only
*** Additional operating force: 7N, 9N available on request

Dimensions are shown: mm
Specifications and dimensions subject to change

K12
High Performance Key Switches

SERIES

K12A without snap in

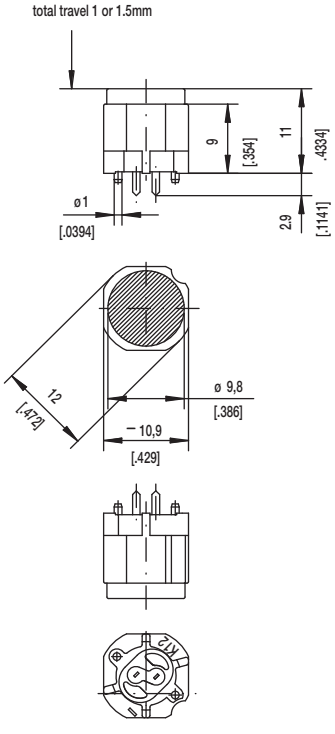

PCB LAYOUT, MOUNTING SIDE

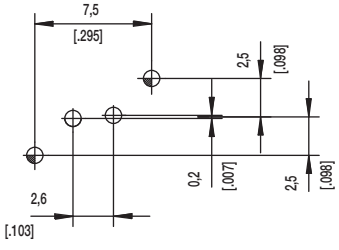

K12AL

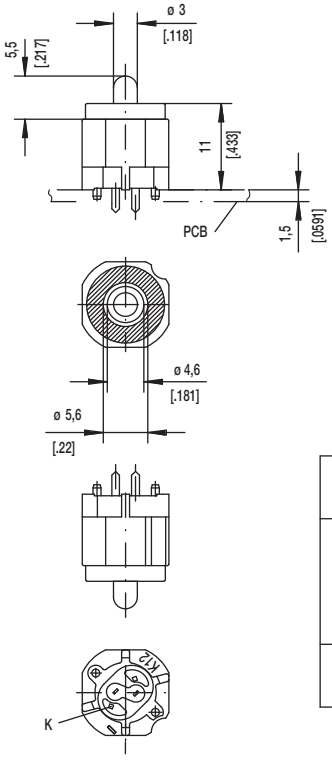

PCB LAYOUT, MOUNTING SIDE

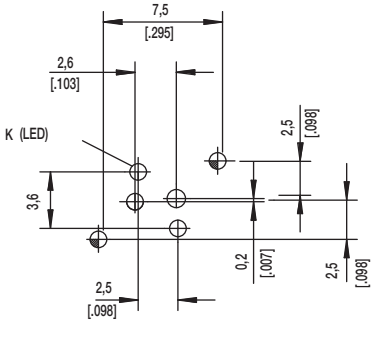

⊕	$1,1^{+0,05}$	2x	2x	center hole		
⊕	$0,9^{\pm 0,05}$		2x	LED	ø0,5 (.020)	Sn
		2x	2x	switch	0,7x0,2 (.028x.081)	Sn
Hole	ø	Without	with LED	Discription	Terminal Section	Surface

First Angle Projection

Dimensions are shown: mm
Specifications and dimensions subject to change

SERIES

K12P with snap in

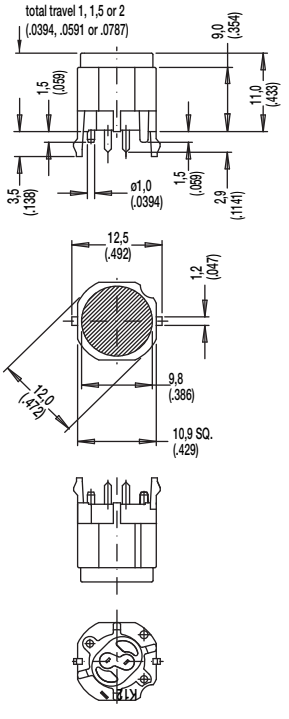

PCB LAYOUT, MOUNTING SIDE

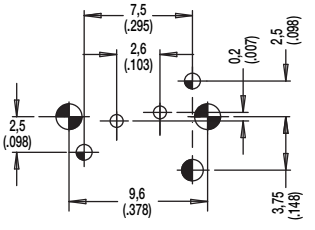

center of actuation area (notice LED)

Hole	Ø	Without LED	Description	Terminal Section	Surface
	1,7 (.069)	2x	snap-in		
	1,6 (.062)	1x	coding hole (L,M,N)		
	1,1 (.043)	2x	center hole		Sn
	0,9 (.035)	2x	switch	0.7 x 0.2 (.028 x .081)	Sn

K12PL

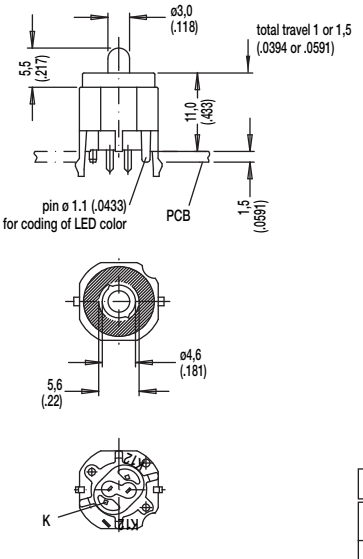

PCB LAYOUT, MOUNTING SIDE

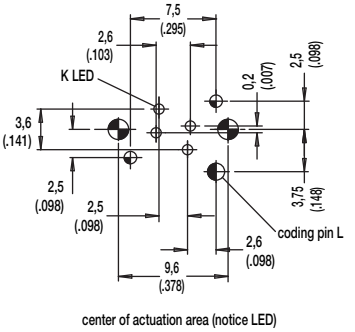

center of actuation area (notice LED)

Hole	Ø	Without LED	Description	Terminal Section	Surface
	1,7 (.069)	2x	snap-in		
	1,6 (.062)	1x	coding hole (L,M,N)		
	1,1 (.043)	2x	center hole		Sn
	0,9 (.035)	2x	LED	m0.5 (.020)	Sn
		2x	switch	0.7 x 0.2 (.028 x .081)	

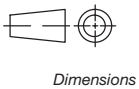

First Angle Projection

Dimensions are shown: mm
Specifications and dimensions subject to change

K12
High Performance Key Switches

SERIES

K12C SEALED CONTACT WITH RUBBER CAP (IP 67)

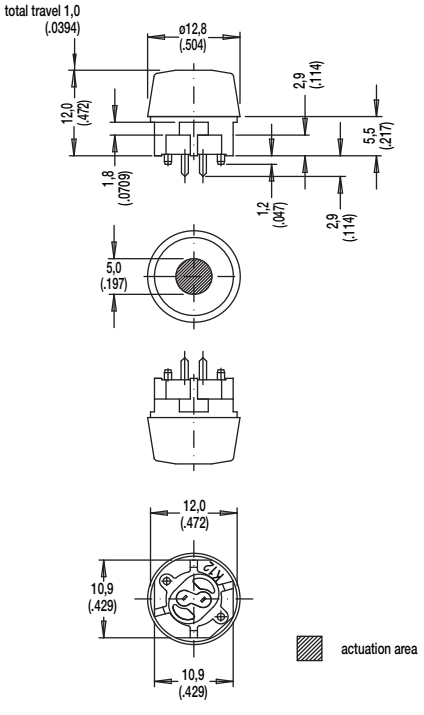

PCB LAYOUT, MOUNTING SIDE

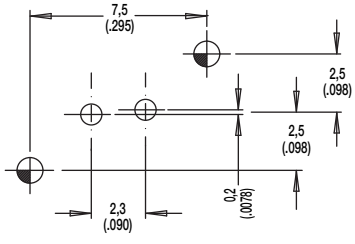

SCHEMATIC	
A	R

Hole	Ø	Without LED	Description	Terminal Section	Surface
	1,1 (.043)	2x	center hole		
	0,9 (.035)	2x	switch	0.7 x 0.2(.0275 x .0787)	Sn

First Angle Projection

Dimensions are shown: mm
Specifications and dimensions subject to change

SERIES

K12GO

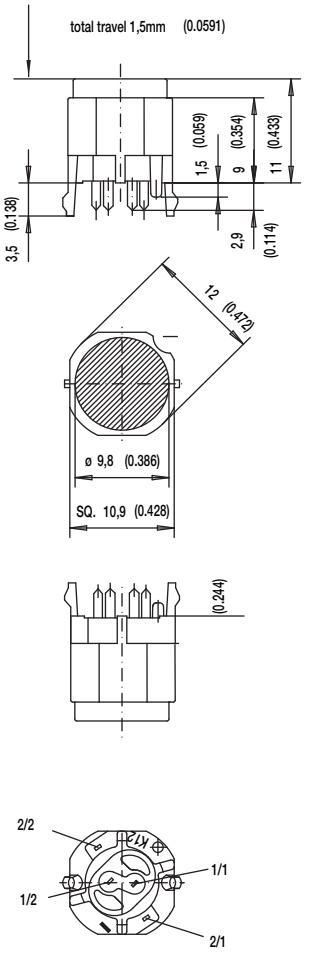

PCB LAYOUT, MOUNTING SIDE

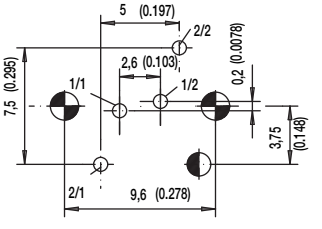

SCHEMATIC K12G

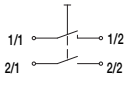

Hole	Ø	Without LED	Description	Terminal Section	Surface
	1,7 (.069)	2x	snap-in		
	1,6 (.062)	1x	code		
	0,9 (.035)		LED	m0.5 (.020)	Sn
		2x	switch 2	0.7 x 0.3 (.028 x .012)	Sn
		2x	switch 1	0.7 x 0.2 (.028 x .081)	Sn

First Angle Projection

Dimensions are shown: mm
Specifications and dimensions subject to change

CAP COLOR

OPTION CODE	COLOR
NONE	Version with LED
BK	Black - no LED
YE	Yellow - no LED
RD	Red - no LED
GY	Gray - no LED

LED COLOR

OPTION CODE	COLOR
NONE	Models without LED
GN	Green
YE	Yellow
OG	Orange
RD	Red
WH	White
BU	Blue

STANDARD LED CODE	COLOR
NONE	Models without LED
LV306	Green
LV327	Yellow
LV315	Orange
LV352	Red
LV302	White
LV328	Blue

TRAVEL

1 1 mm
1.5 1.5 mm
2 2 mm

OPERATING FORCE

OPTION CODE	OPERATING FORCE
1.5N OD	1.5 N,150g without snap-point
2.5N	2.5 N, 250g
3.5N	3.5 N, 350g
5N	5 N, 500g
3.5/7N	3.5/7 N, 350/700g
6/12N	6/12 N, 600-1200g

CONTACT ARRANGEMENT OPTION

1R SPST NC (SPECIAL REQUEST FOR NORMALLY CLOSED OPTION)

First Angle Projection

Dimensions are shown: mm
Specifications and dimensions subject to change

Features/Benefits

- *Compact design*
- *Short stroke to latch*
- *Wide variety of actuator heights*
- *Adapted for medium power applications*
- *RoHS compliant and compatible*

Typical Applications

- *Automotive (air conditioning, lighting)*
- *Industrial*
- *Control panel*

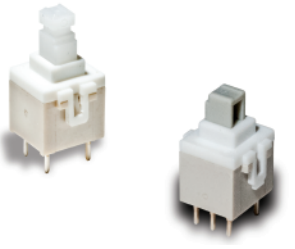

Construction

FUNCTION: Momentary, Push-Push
CONTACT ARRANGEMENT:
PVA1: 2 make contacts (DPST)
PVA2: 2 change over contacts (DPDT)
SWITCHING MODE: Non-shorting
TERMINALS: PC pins[1]

Mechanical

TOTAL TRAVEL / LATCHING TRAVEL:
OA: 2,4 mm
EE: 2,4 / 1,5 mm
ELECTRICAL TRAVEL: 0.8 mm (1.1 for PVA2 OA H5)
OPERATING FORCE: 1,2N; 1,7N; 3,5N

Process

SOLDERABILITY:
Wave soldering, compatible with lead free soldering profile
Hand soldering, 350˚C for 3 seconds

Note: Specifications listed above are for switches with standard options.
For information on specific and custom switches, please contact technical support using the "Ask a Specialist"option on the PVA product web page.√

Electrical

SWITCHING POWER MAX.: 3 W DC
SWITCHING VOLTAGE MAX.: 32 V DC
SWITCHING CURRENT MAX.: 100 mA DC*
DIELECTRIC STRENGTH (50 Hz / 1 min):
1000 V between open contacts, PVA2: 750 V
OPERATING LIFE:
OA (momentary): ≥ 1 x 10^5 operations
EE (push-push): ≥ 1 x 10^5 operations
CONTACT RESISTANCE: Initial ≤ 100 mΩΩ
INSULATION RESISTANCE: ≥ 10^{10} Ω
BOUNCE TIME: ≤ 3 ms

Environmental

OPERATING TEMPERATURE: -40˚C to 85˚C.[2]

1) "Snap-in" contacts on request, Version SNA with pins bent inside (standard)
2) With button +70˚C

How To Order

Our easy build-a-switch concept allows you to mix and match options to create the switch you need. To order, select desired option from each category and place it in the appropriate box. **Some of the configurations may not be available or could require some development.**

Switch

P V A [ ] – [ ][ ] – [ ][ ] – [ ][ ][ ] – [ ][ ][ ] – V 2

Series
PVA1 2 make-contacts (DPST)
PVA2 2 changeover contacts (DPDT)

Mechanical Function
OA Momentary
EE Push-push

Total Height
H1 17,5 mm
H2 23 mm
H3 20,5 mm
H4 15 mm
H5 13 mm (momentary & PVA2 only)

Operating Force
1.2N PVA1 only
1.7N PVA2 only
3.5N

Termination
NONE Standard terminals
SNA Snap-in terminals

Button

Buttons must be ordered separately.
Shipped in bulk.

[ ][ ] – [ ][ ]

Button
PE
PV

Button Color
RD Red
GR Green
BK Black
WH White

Dimensions are shown: mm
Specifications and dimensions subject to change

PVA
Short Stroke Key Switches

SERIES

PVA1 (DPST)

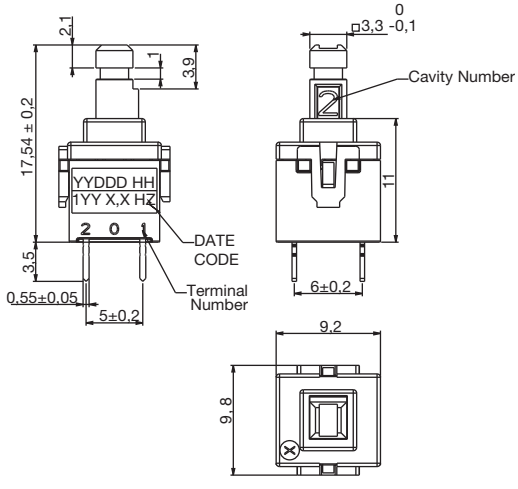

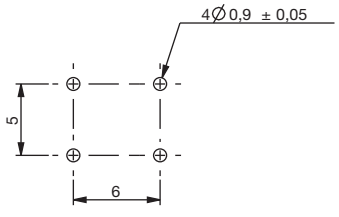

RECOMMENDED LAYOUT

PVA2 (DPDT)

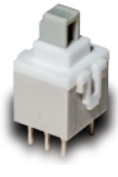

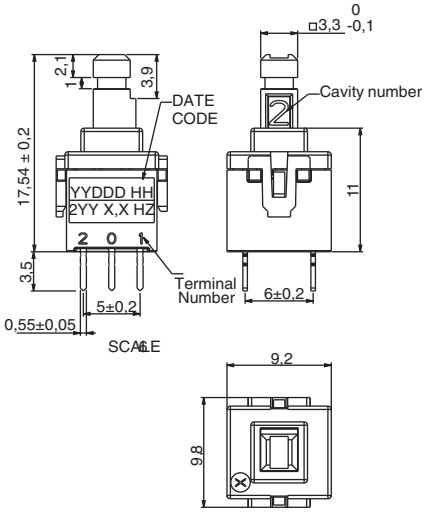

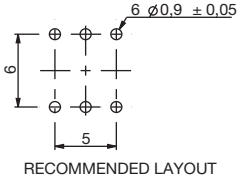

RECOMMENDED LAYOUT

MECHANICAL FUNCTION

OPTION CODE	FUNCTION
OA	Momentary
EE	Push-Push

OA

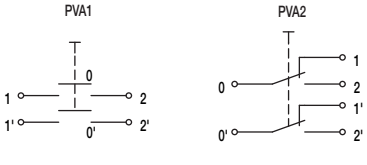

EE

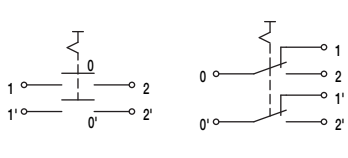

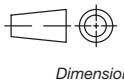

First Angle Projection

Dimensions are shown: mm
Specifications and dimensions subject to change

TOTAL HEIGHT

H1 17,5 MM

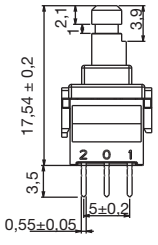

H2 23 MM

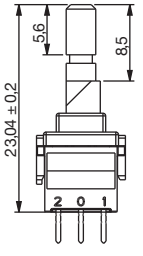

H3 20,5 MM

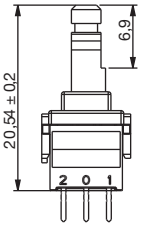

H4 15 MM

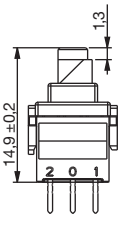

H5 13 MM
(MOMENTARY ONLY)

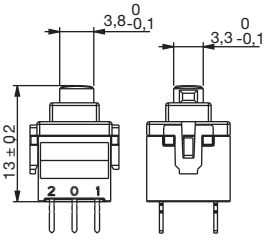

OPERATING FORCE

1.2N PVA1 ONLY
1.7N PVA2 ONLY
3.5N

TERMINATION

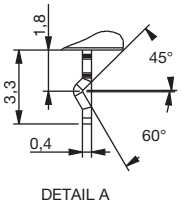

SNA with PVA1

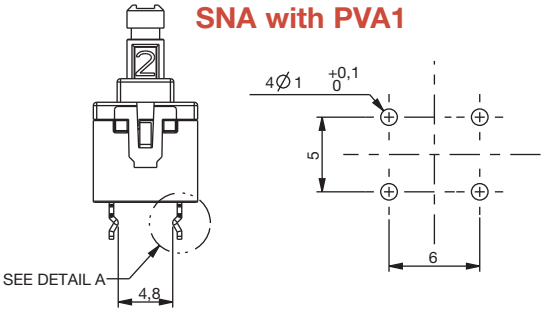

SNA with PVA2

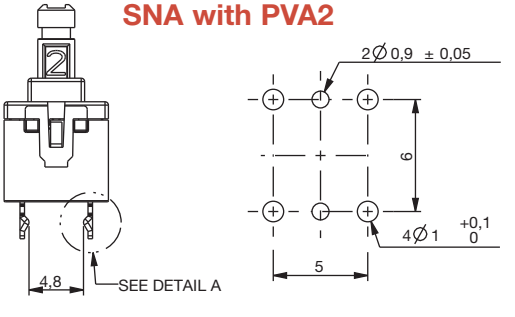

BUTTONS

BUTTONS MUST BE ORDERED SEPARATELY. SHIPPED IN BULK.

PE

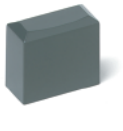

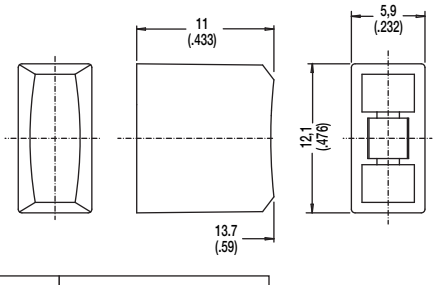

OPTION CODE	COLOR
RD	Red
GY	Gray
BK	Black
WH	White

PV

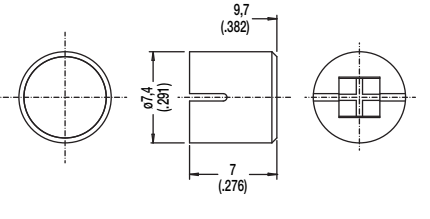

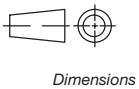
First Angle Projection

Dimensions are shown: mm
Specifications and dimensions subject to change

SPST Momentary Key Switches

Features/Benefits

- *Easy X, Y coding on single side PCB*
- *Positive tactile feedback*
- *High temperature*
- *Wide variety of colors & styles*
- *RoHS compliant and compatible*

Typical Applications

- *Video*
- *Electronic games*
- *Appliances*

Construction

FUNCTION: momentary
CONTACT ARRANGEMENT: 1 make contact (SPST), NO
DISTANCE BETWEEN BUTTON CENTERS, MIN.: 12,7 (0.500)
TERMINALS: PC pins

Electrical

SWITCHING POWER MAX.: 3 VA
SWITCHING VOLTAGE MAX.: 32 V DC
SWITCHING CURRENT MAX.: 100 mA DC
DIELECTRIC STRENGTH (50 Hz / 1 min): 250 V
OPERATING LIFE with max. switching power: ($2{,}5 \times 10^5$ operations)
CONTACT RESISTANCE: ≤100 mΩ
INSULATION RESISTANCE: $\geq 10^8\,\Omega$
BOUNCE TIME: ≤10 ms

Packaging

The D6 switches are delivered in boxes containing 10 trays with 250 pieces each: Total 2,500 pieces per box.
The D6 buttons are delivered in bulk with 2500 pieces per box.

Mechanical

SWITCHING TRAVEL:
Version F1: 0.2mm ≤ Te ≤ 1.0 mm
Version F2: 0.3mm ≤ Te ≤ 1.1 mm
OPERATING FORCE:
Version F1: 0.8N ≤ Fa ≤1.8N
Version F2: 2.0N ≤ Fa ≤ 3.5N

Environmental

OPERATING TEMPERATURE: -20˚C to 85˚C.

Process

SOLDERABILITY:

Wave soldering, compatible with lead free soldering profile
Hand soldering, 350˚C for 3 seconds

How To Order

Our easy build-a-switch concept allows you to mix and match options to create the switch you need. To order, select desired option from each category and place it in the appropriate box.

Switch

D6 [ ] — [ ][ ] — [ ][ ] — LFS

Series
D6C Square
D6R Round
D6L* Plunger
D6F** Flat

Switch Color
00 White
10 Gray
30 Yellow
40 Red
50 Green
60 Blue
90 Black

Force
F1 1.3N(STD)
F2 2.5N

RoHS compliant and compatible product.

*Available only in color 90 (black).
** Available only in color 90 (black) and 00 (white).

Button

Buttons can be ordered separately.
Shipped in bulk.

D6 button for use with D6C only.

B T N D 6 — [ ][ ] — F

Series
BTND6 Button

Button Color
00 White
10 Gray
30 Yellow
40 Red
50 Green
60 Blue
90 Black

Version F1 or F2.

First Angle Projection

Dimensions are shown: mm
Specifications and dimensions subject to change

D6
SPST Momentary Key Switches

SERIES

D6C

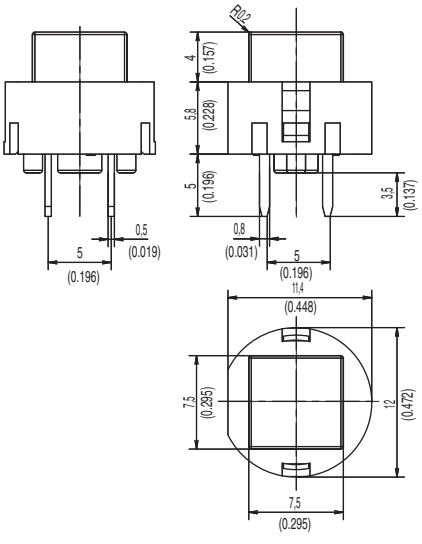

D6R

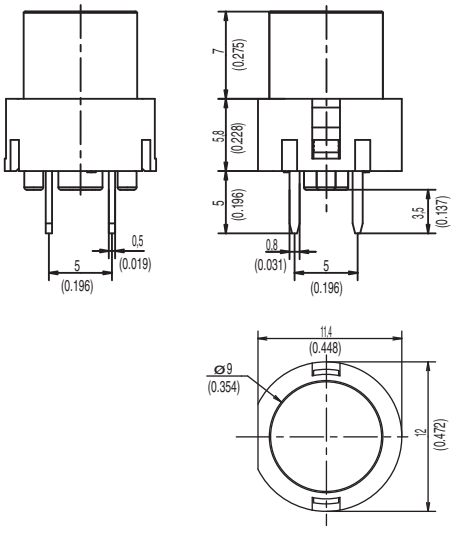

D6L ONLY AVAILABLE IN BLACK

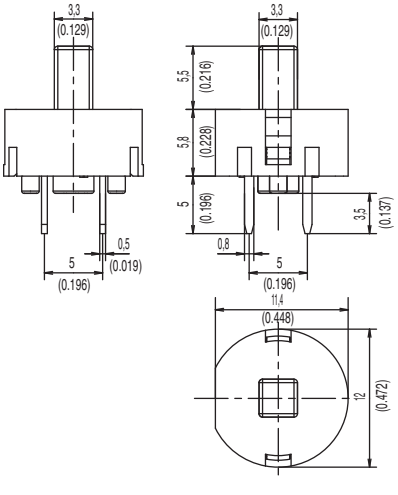

D6F

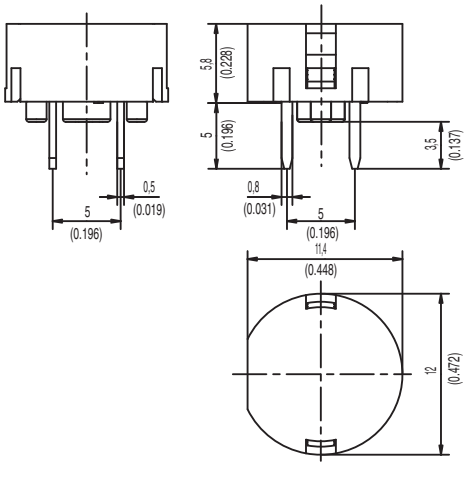

First Angle Projection

Dimensions are shown: mm
Specifications and dimensions subject to change

SWITCH COLORS

OPTION CODE	SWITCH COLOR
00	WHITE
10	GRAY
30	YELLOW
40	RED
50	GREEN
60	BLUE
90	BLACK

PCB LAYOUT

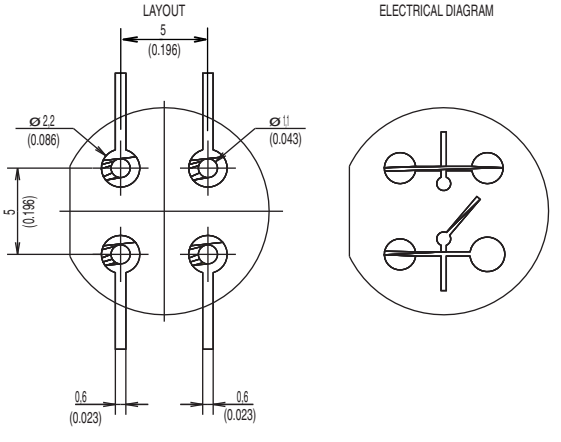

BUTTON AVAILABLE

BTND6 Buttons must be ordered separately. Shipped in bulk.

NOTE: Only compatible with D6C.

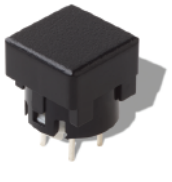

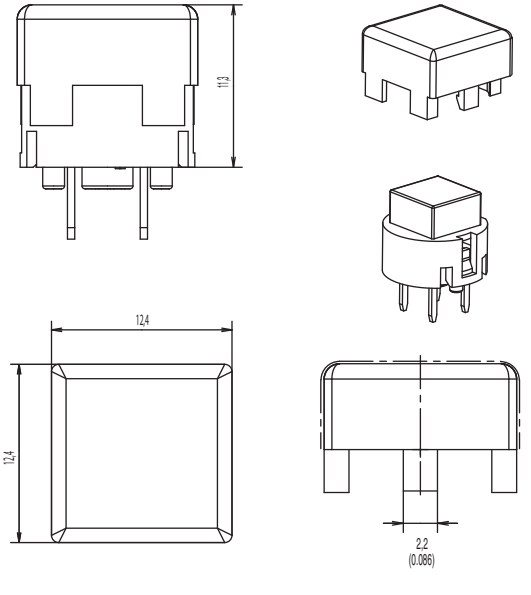

OPTION CODE	BUTTON COLOR
00	WHITE
10	GRAY
30	YELLOW
40	RED
50	GREEN
60	BLUE
90	BLACK

First Angle Projection

Dimensions are shown: mm
Specifications and dimensions subject to change

KS
Single Pole Key Switches

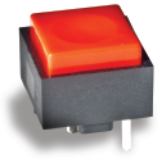

Features/Benefits

- ***Positive tactile feel***
- ***Variety of cap colors***
- ***SPST and SPDT configurations***
- ***RoHS compliant***

Typical Applications

- ***Telecommunications***
- ***Industrial***
- ***Instrumentation***

Specifications

CONTACT RATING: Q contact material: 25mA @ 50V AC .or DC max.
ELECTRICAL LIFE: 100,000 actuations.
CONTACT RESISTANCE: Below 100 mΩ initial @ 2-4 V DC, 100 mA
INSULATION RESISTANCE: 10^9 Ω min.
DIELECTRIC STRENGTH: 1,000 Vrms min. @ sea level.
OPERATING TEMPERATURE: -30˚C to 65˚C.
SOLDERABILITY: Per MIL-STD-202F method 208D, or EIA RS-186E method 9 (1 hour steam aging).

Note: Specifications and materials listed above are for switches with standard options. For information on specific and custom switches, consult Customer Service Center.

Materials

CASE: Glass filled nylon (UL 94V-0).
ACTUATOR: ABS, matte finish, black standard.
MOVABLE CONTACT: Q contact material: Stainless steel, silver plated.
STATIONARY CONTACTS AND TERMINALS: Q contact material: copper alloy, silver plated.
TERMINAL SEAL: Epoxy

How To Order

Our easy build-a-switch concept allows you to mix and match options to create the switch you need. To order, select desired option from each category and place it in the appropriate box.

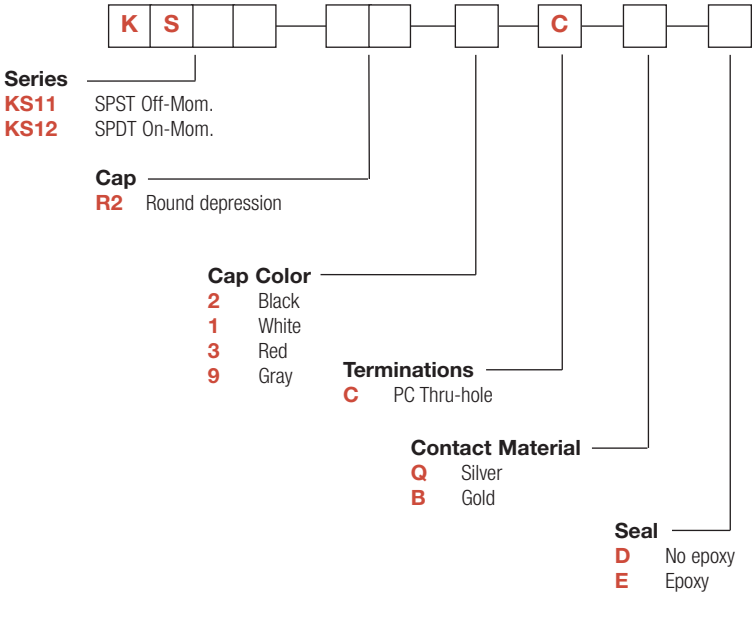

SERIES

KS11 / KS12

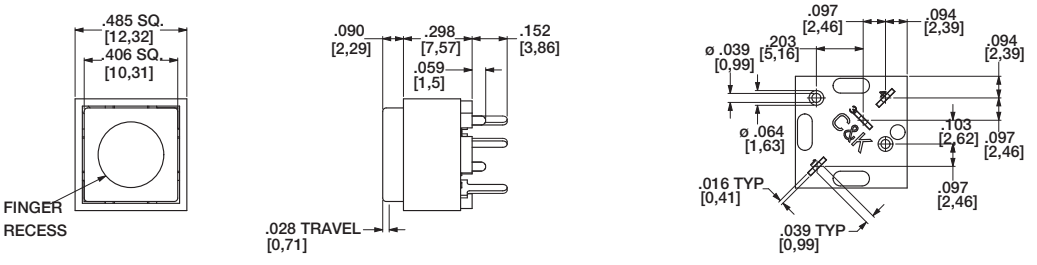

NO. POLES	MODEL NO.	SWITCH FUNCTION POS. 1	SWITCH FUNCTION POS. 2	CONNECTED TERMINALS POS. 1	CONNECTED TERMINALS POS. 2	SCHEMATIC
SP	KS11	OFF	MOM.	OPEN	1–3	SPST 1 3
	KS12	ON	MOM.	1–4	1–3	SPDT 1 (COMM) NC 4 3 NO

CAP

R2 CAP WITH ROUND DEPRESSION

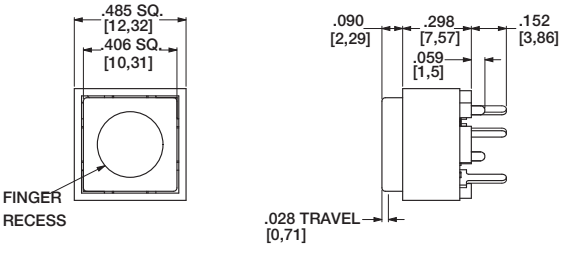

OPTION CODE	CAP COLOR
2	BLACK
1	WHITE
3	RED
9	GRAY

Third Angle Projection

Dimensions are shown: mm
Specifications and dimensions subject to change

KS
Single Pole Key Switches

TERMINATION

C PC THRU-HOLE

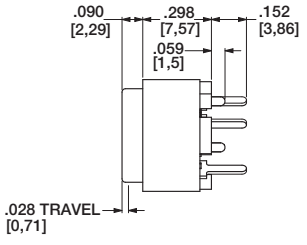

PC MOUNTING

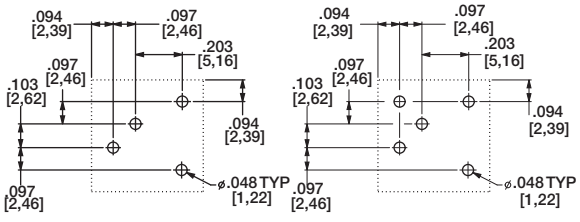

KS11 KS12

MULTIPLE SWITCH SPACING

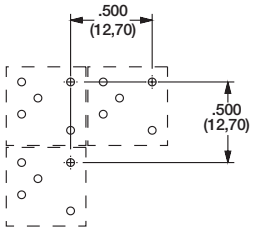

CONTACT MATERIAL

OPTION CODE	CONTACT MATERIAL	TERMINAL PLATING	RATINGS	
Q	SILVER[2]	SILVER[2]	POWER	25 mA MAX. @ 50 V AC OR DC MAX.
B	GOLD[1]	GOLD[1]	LOW LEVEL/DRY CIRCUIT	0.4 VA MAX. @ 20 V AC OR DC MAX.

1) MOVABLE CONTACT: Stainless steel, with gold plate over nickel plate.
STATIONARY CONTACTS & ALL TERMINALS: Copper alloy, with gold plate over nickel plate.

2) MOVABLE CONTACT: Stainless steel, silver plated.
STATIONARY CONTACTS & ALL TERMINALS: Copper alloy, silver plated.

NOTE: Any models supplied with Q or B contact material are RoHS compliant.

SEAL

D NO EPOXY SEAL

E EPOXY SEAL

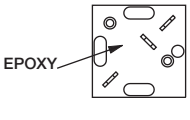

Third Angle Projection

Dimensions are shown: mm
Specifications and dimensions subject to change

Features/Benefits

- *High reliability/long life*
- *Designed for low level switching*
- *Ready to implement on PCB*
- *Latching function available*
- *Several button options*
- *RoHS compliant and compatible*

Typical Applications

- *Medical*
- *Instrumentation*
- *Industrial electronics*
- *Audio electronics*

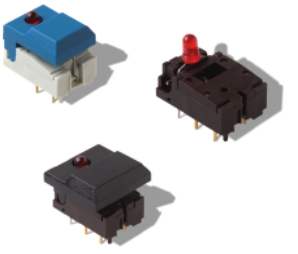

Construction

FUNCTION: momentary or push-push
CONTACT ARRANGEMENT: 1 change over contact SPDT, NO
MODE OF SWITCHING: Non-shorting
DISTANCE BETWEEN BUTTON CENTERS:
HORIZONTAL MINIMUM: 12,7 (0.500) or 17,78 (0.700)
VERTICAL MINIMUM: 17,78 (0.700)
TERMINALS: PC pins
MOUNTING: Soldering, centering pins

Mechanical

TOTAL TRAVEL: ≤ 3 (.0018)
SWITCHING TRAVEL: 1,5 (0.0591)
LATCHING TRAVEL: 1,8 (0.0709)
OPERATING FORCE: 1.5 +/- 0.5 N (150 +/- 50 grams)

Process

SOLDERABILITY:
Wave soldering, compatible with lead free soldering profile
Hand soldering, 350˚C for 3 seconds

Electrical

SWITCHING POWER MAX.: 240 mW DC
SWITCHING VOLTAGE MAX.: 24 V DC
SWITCHING CURRENT MAX.: 10 mA DC
CARRYING CURRENT AT 20˚C (push-push version): 100 mA
DIELECTRIC STRENGTH (50 Hz, 1 min): 500 V
OPERATING LIFE with or without max. switching power
Momentary: ≥ 5 x 10^6 operations
Push-push: ≥ 5 x 10^5 operations
CONTACT RESISTANCE: Initial ≤ 50 mΩ
After 5 x 10^6 operations: ≤ 100 mΩ
INSULATION RESISTANCE: ≥ 10^{10} Ω
CAPACITANCE at f= 10 kHz: ≤ 0.8pF
BOUNCE TIME: ≤ 2.5 ms
Operating speed 400 mm/s (15.75/s)

Environmental

OPERATING TEMPERATURE: -25˚C to 85˚C.

How To Order

Our easy build-a-switch concept allows you to mix and match options to create the switch you need. To order, select desired option from each category and place it in the appropriate box. **Some of the configurations may not be available or could require some development.**

Switch

[ ][ ][ ][ ] – [ ][ ] – [ ][ ] – [ ][ ] – [ ][ ][ ] – [ ][ ] – [A][U] – [ ][ ] – [ ][ ][ ]

Series
SER Narrow button
SET Wide button
SERU Switch body only (no button)

LED
NONE No LED
L 1 LED
2L 2 LED's

Button Color**
None (SERU)
BK Black
GY Gray
WH White
RD Red
BU Blue

1st LED Color***
NONE No LED
RD Red
YE Yellow
GN Green

LED Spacing*
NONE Narrow LED Spacing (TYP Europe)
7.62 Wide LED Spacing (TYP No. America)

2nd LED Color***
NONE No LED
RD Red
YE Yellow
GN Green

Contact Material
AU Gold

Function
EE Latching
OA Non-latching

Body Color
NONE White (STD)
BRN Brown

Reference
SER BK AU OA

Button

[ ][ ] – [K] – [ ][ ] – [ ][ ] – [ ][ ]

Reference
SRK BK

Button Style
SR Narrow
ST Wide

LED Holes
NONE No LED holes
L 1 LED hole
2L 2 LED holes

Button Color**
BK Black
GY Gray
WH White
RD Red
BU Blue

Latching
None For use with momentary switch
EE With "EE" staple for latching

* LED spacing only applies when 1 LED requested
** Additional button colors available by request
*** Additional LED colors available by request including Bi color configurations

Dimensions are shown: mm
Specifications and dimensions subject to change

DIGITAST
Microminiature SPDT, Key Switches

DESIGNATION

SER NARROW BUTTON

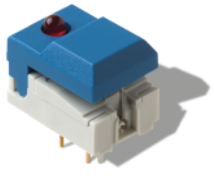

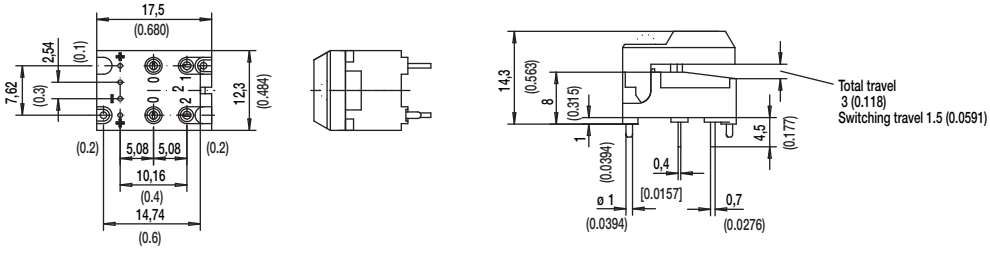

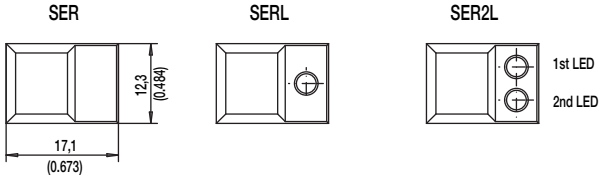

SET WIDE BUTTON

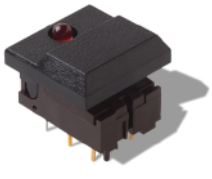

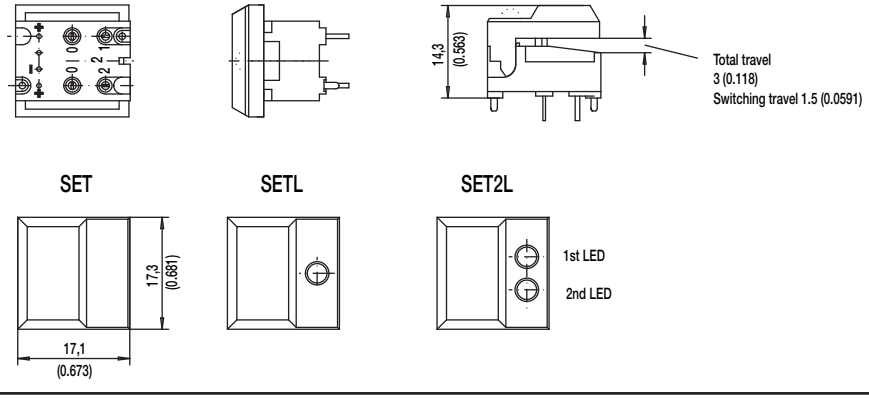

SERU NO BUTTON

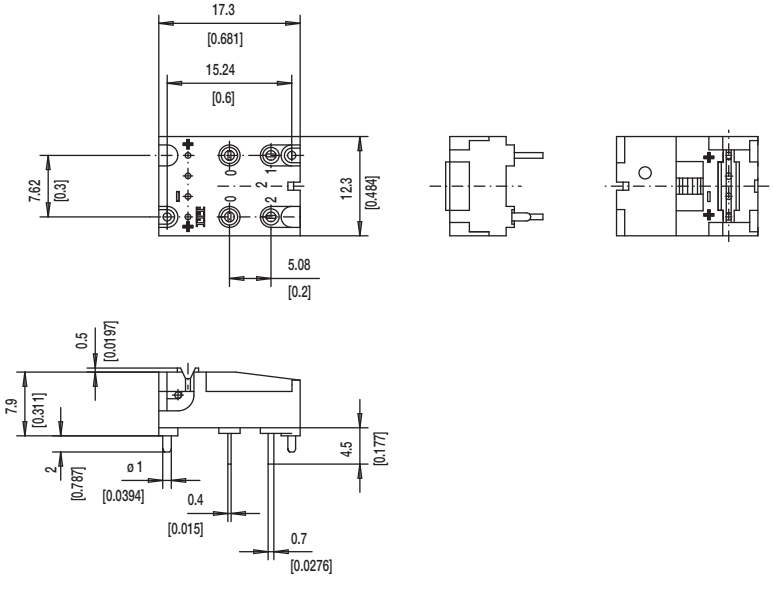

First Angle Projection

Dimensions are shown: mm
Specifications and dimensions subject to change

LED

NONE NO LED

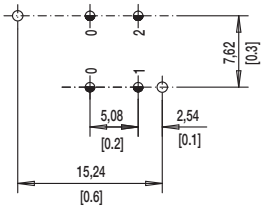

L 1 LEDs

7.62 mm Spacing (TYP No. America)

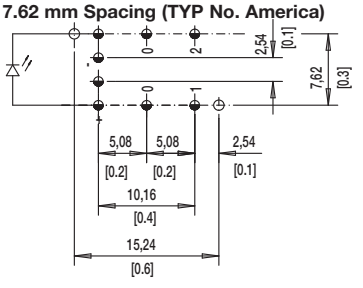

NARROW SPACING (TYP EUROPE)

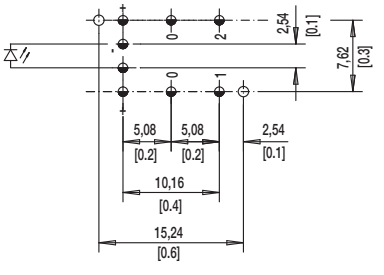

TOP VIEW OF PCB

2L 2 LEDs

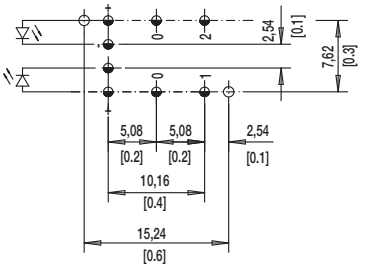

ø 1.0±0.1 (0.0394±0.00349)

ø 1.1±0.05 (0.0433±0.00197)

BUTTON COLOR

BK BLACK

GY GRAY

Other button colors available by request [red (RD), green (GN), white (WH), yellow (YE) , blue (BU) , orange (OG)].

LED COLOR

OPTION CODE	COLOR
NONE	Models without LED
RD	Red
GN	Green
YE	Yellow

CONTACT MATERIAL

OPTION CODE	MATERIAL
AU	Gold

FUNCTION

OPTION CODE	COLOR	SCHEMATIC
OA	Momentary	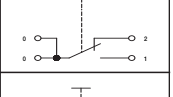
EE	Push-Push	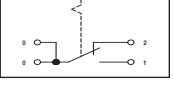

First Angle Projection

Dimensions are shown: mm
Specifications and dimensions subject to change

ED & EDM Domes

Features

- *Short travel*
- *Good tactile feedback*
- *Self cleaning*
- *3 actuation forces*
- *RoHS*

Typical Applications

- *Aircraft*
- *Instrument*
- *Panels*
- *Radio equipment*

Specification

ED: Disc element
EDM: Disc element and double dome
FUNCTION: Momentary action
CONTACT TYPE: Normally open - SPST
TERMINALS: Through hole PCB terminations or Tabs
OPERATING LIFE: 1,000,000

Packaging

Trays 50 pieces.

Electrical

	Silver	Gold
MAXIMUM POWER:	1.0 VA	0.2 VA
MAXIMUM VOLTAGE:	100 VDC	100 VDC
MINIMUM VOLTAGE:	20m VDC	20m VDC
MIN/MAX CURRENT:	1.0 mA - 100 mA	50µA - 50 mA
DIELECTRIC STRENGTH:	≥ 250 Vrms	
CONTACT RESISTANCE:	≤ 100 mΩ	
INSULATION RESISTANCE: (between terminals)	Initial measurement: ≥ 1 GΩ After damp heat: ≥ 10 MΩ	
BOUNCE TIME:	≤ 3 ms	

Environmental

	Silver	Gold
OPERATING TEMPERATURE:	-25˚C to 70˚C	-55˚C to 85˚C

Mechanical

Type	Operating force Newtons (grams)	Tactile Feeling (Δ%)	Return Force N	Travel (mm)
EDSAC LFS	2.4 (240) ± 25%	≥ 30%	≥ 0.4 N	0.3mm ± 0.15
EDSSC LFS	2.4 (240) ± 25%	≥ 30%	≥ 0.4 N	0.3mm ± 0.15
EDM450SAC LFS	4.5 (450) ± 25%	≥ 25%	≥ 1.0 N	0.5mm ± 0.25
EDM650SSC LFS	6.5 (650) ± 25%	≥ 25%	≥ 1.6 N	0.6mm ± 0.25

SIMULTANEITY: ≤ 0.05 mm

How To Order

Our easy build-a-switch concept allows you to mix and match options to create the switch you need. To order, select desired option from each category and place it in the appropriate box.

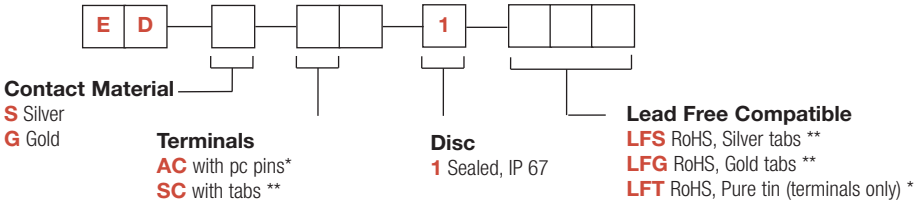

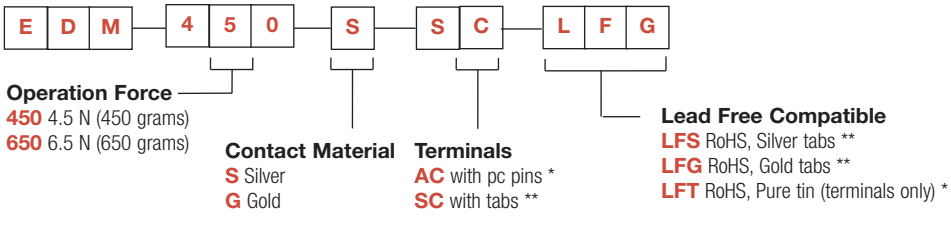

Note
* AC terminals only available with LFT
** SC terminals only available with LFS or LFG

First Angle Projection

Dimensions are shown: mm
Specifications and dimensions subject to change

ED

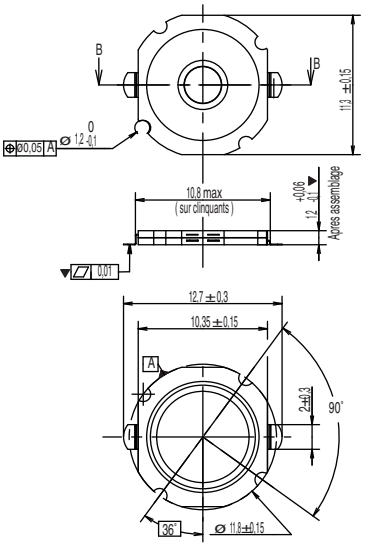

EDM

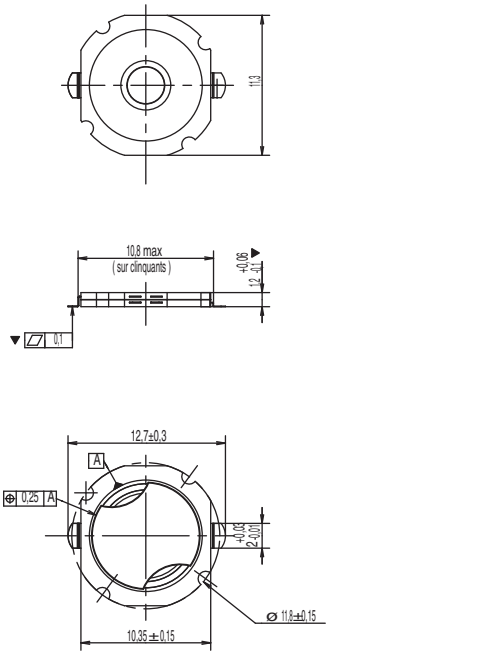

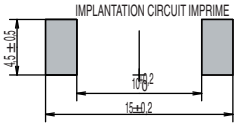

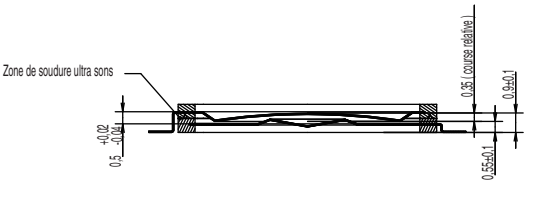

Switch Action Principal

The disc contact is essentially made of two separate conductive dome diaphragms separated by an insulated material.

The upper diaphragm is shaped so that under pressure it collapses suddenly and establishes contact with the lower diaphragm.

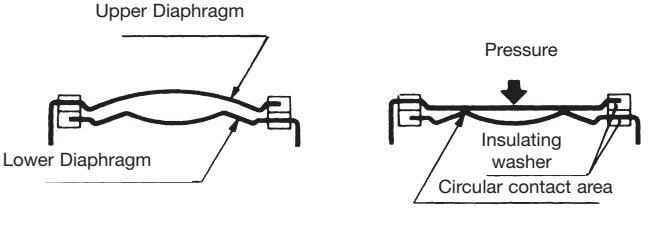

Switch in resting position

Switch in active position

First Angle Projection

Dimensions are shown: mm
Specifications and dimensions subject to change

KBD
Keyboard Switches

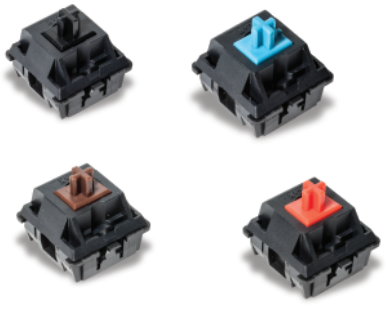

Features

- ***Long operating life***
- ***High reliability***
- ***Excellent ergonomics***
- ***RoHS compliant***

Typical Applications

- ***Gaming keyboard***
- ***Professional keyboard***
- ***Industrial keyboard***
- ***Workstation keyboard***

Specifications

CONTACT ARRANGEMENT: SPST
CONTACT RATING: 10mA @ 12 VDC
INITIAL CONTACT RESISTANCE: 200 m Ω max. (25m Ω typically)
INSULATION RESISTANCE: 100M Ω min. @ 100 VDC
DIELECTRIC STRENGTH: 250 VAC (50-60 Hz) 60 sec.
ELECTRICAL LIFE: 50,000,000 cycles
PRE-TRAVEL: 1.5 ~ 2 mm
OVERTRAVEL: 4 mm
OPERATING TEMPERATURE: -10˚C to +70˚C

Materials

COVER: Nylon (UL94V-0)
HOUSING: Nylon (UL94V-0)
KNOB: POM (UL94HB)
TERMINALS: Copper alloy, gold plated in contact area,
Tin plated in soldering area
SPRING: Stainless steel

How To Order

Our easy build-a-switch concept allows you to mix and match options to create the switch you need. To order, select desired option from each category and place it in the appropriate box.

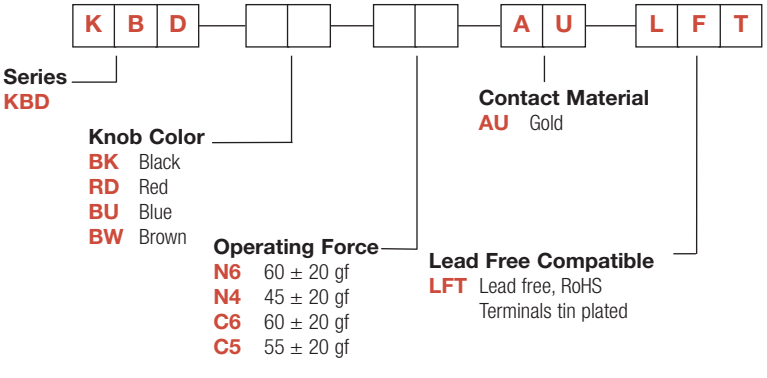

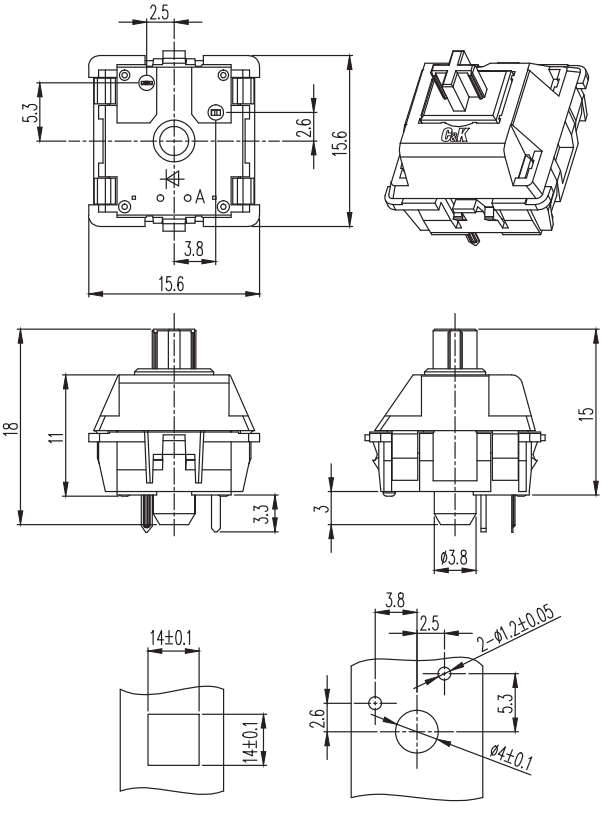

Panel Cut
Panel Thickness 1.2mm

PCB Diagram

PART NUMBER	FEELING	KNOB COLOR	OPERATING FORCE	OPERATING LIFE
KBDBKN6AULFT	Linear actuation	BLACK	60±20gf	50,000,000
KBDRDN4AULFT	Linear actuation	RED	45±20gf	50,000,000
KBDBUC6AULFT	Click pressure point	BLUE	60±20gf	50,000,000
KBDBWC5AULFT	Click pressure point	BROWN	55±20gf	50,000,000

Detect Switches
Product Selection Guide

Detect						
Series	**HDT**	**DS**	**HDS**	**HDP**	**SDP**	**SDS**
Travel to Make (mm)	0,3	See datasheet	0,17	0,24	29,2°	0,35
Overtravel (mm)	0,75	See datasheet	0,5	1,66	39,1°	1,65
Total Travel (mm)	1,05	See datasheet	1,07	1,9	68,3°	2,0
Actuator Length (mm)	1,4	See datasheet	1,17	2,15	1,85	2,5
Life Expectancy	100,000 cycles	20,000; 50,000; 100,000 cycles	100,000 cycles	100,000 cycles	50,000 cycles	50,000 cycles
Contact Type	SPST N.O.	SPST SPDT	SPST N.O.	SPST N.O.	SPDT	SPST N.O. SPST N.C.
Max. Voltage (V)	5	5 V; 16 V 30 V	5	5	5	12
Max. Switching Current (mA)	1 mA	1 mA; 5 mA 100 mA	1 mA	1 mA	1 mA	100 mA
Sealing	No	No	No	No	No	No
Mounting	Surface mount	Thru-hole Solder lug	Surface mount	Surface mount	Surface Mount	Surface mount
Page number	E–4	E–7	E–12	E–14	E–16	E–17

Detect				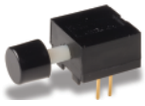		
Series	**DDS**	**MDS**	**KDS**	**KM**	**MPS**	**ZMA**
Travel to Make (mm)	0,45	2,5 max.	1,25 max.	4,06	See datasheet	1,3 max.
Overtravel (mm)	1,95	0,15 min.	8,9	1,78	See datasheet	0,2 min.
Total Travel (mm)	2,4	2,9	10,16	5,84	See datasheet	1,5
Actuator Length (mm)	2,6	R 8,4	10,16	10,11	N/A	
Life Expectancy	50,000 cycles	100,000 cycles	10,000 cycles	10,000 cycles	10,000,000 cycles	300,000 cycles
Contact Type	SPST N.O.	SPDT	SPST N.O. SPST N.C.	SPDT	SPST N.O.	SPDT
Max. Voltage (V)	30	30	20	125 V AC	30	125 V
Max. Switching Current (mA)	100 mA	300 mA	.4 VA	250 mA	300 mA	3 Amps
Sealing	No	No	No	Flux tight	Yes	No
Mounting	Thru-hole	Thru-hole & Surface Mount	Snap-in panel	Thru-hole	Wire lead	Thru-hole
Page Number	E–18	E–20	E–26	E–27	E–30	E–32

Detect						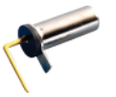
Series	**KSU**	**KSR2D**	**KSM**	**KSC4D**	**KSJ**	**RB**
Travel to Make (mm)	0,5	0,3	0,3	0,6	0,3	See datasheet
Overtravel (mm)	1,0	N/A	1,15	N/A	0,75	N/A
Total Travel (mm)	1,5	0,3	1,72	0,6	1,05	N/A
Actuator Length (mm)	1,5	0,8	1,8	2,6	1,4	N/A
Life Expectancy	100,000 cycles	100,000 cycles	50,000 cycles	500,000 and 2,000,000 cycles	100,000 cycles	20,000; 100,000 cycles
Contact Type	SPST N.O.	SPST N.O.	SPST N.C.	SPST N.O.	SPST N.O.	SPST SPDT
Max. Voltage (V)	32	32	32	32	5	5 V; 24 V
Max. Switching Current (mA)	50 mA	10 mA	50 mA	50 mA	1 mA	1 mA; 25 mA
Sealing	Dust and water drop proof	Dust and flux tight	Flux tight	IP67	IP60	No
Mounting	Surface mount	Surface mount	Surface mount	Surface mount	Surface mount	Thru-hole
Page number	E–36	E–38	E–40	E–42	E–44	E–46

HDT Series
Micro Mini Surface Mount Detect Switches

Features/Benefits

- ***Low profile package***
- ***Design allows top or side actuation***
- ***Low actuation force, 35 grams max.***
- ***Pick and place compatible, available in tape & reel packaging***
- ***RoHS compliant and compatible***
- ***Halogen free***

Typical Applications

- ***Consumer electronics***
- ***Computers***
- ***Medical devices***
- ***ATCA and MicroTCA devices***

Specifications

CONTACT RATING: 1 mA 5 VDC

MECHANICAL AND ELECTRICAL LIFE: 100,000 cycles min.

CONTACT RESISTANCE: 500 m Ω max. initial.

INSULATION RESISTANCE: 100 M Ω min. between adjacent contacts.

OPERATING TEMPERATURE: -40ºC to + 85ºC

STORAGE TEMPERATURE: -40ºC to + 85ºC

PACKAGING: Tape & reel

Materials

BASE: PA 46 (UL94V-0)

COVER: PA 46 (UL94V-0)

ACTUATOR: PA 46 (UL94V-0)

MOVABLE BLADE: Stainless Steel, Ag over Ni plating.

TERMINALS: Phosphor Bronze, Ag over Ni plating.

SOLDERABILITY: Lead free compatible - No clean.

NOTE: Specifications and materials listed above are for switches with standard options. For information on specific and custom switches, consult Customer Service Center.

Build-A-Switch

Complete part numbers for HDT Series are shown below.

PART NUMBER	PACKAGING	SCHEMATIC
HDT0001	TAPE & REEL 2,450 per reel	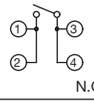 N.O.

NOTE: Available with no locating posts by adding "NP" (HDT0001NP) to Part Number.

TRAVEL:

Pre-travel	.30 mm
Overtravel:	.75 mm
Total:	1.05 mm

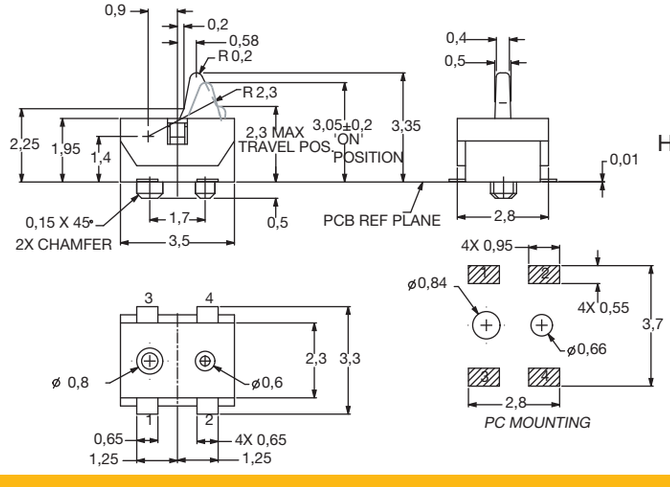

HDT0001

TAPE & REEL

HDT0001

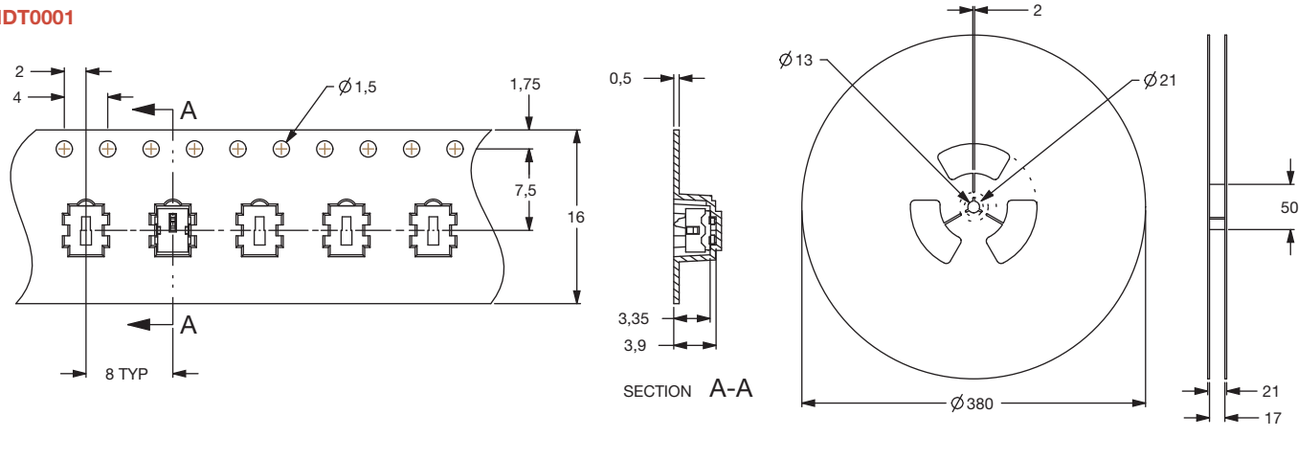

Third Angle Projection

Dimensions are shown: mm

Specifications and dimensions subject to change

HDT0004

HDT0004

PART NUMBER	PACKAGING	SCHEMATIC
HDT0004	TAPE & REEL 2,800 per reel	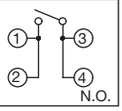

TRAVEL:

Pre-travel .3 mm

Overtravel: 1.0 mm

Total: 1.3 mm

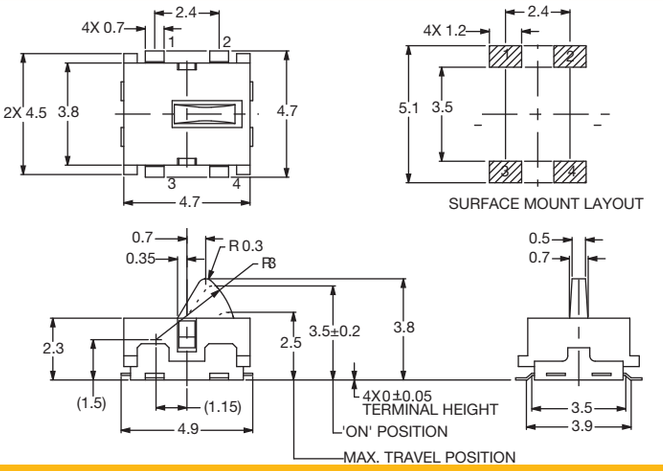

TAPE & REEL

HDT0004

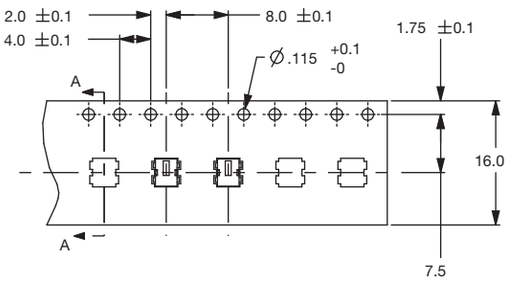

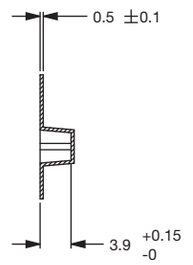

SECTION A-A

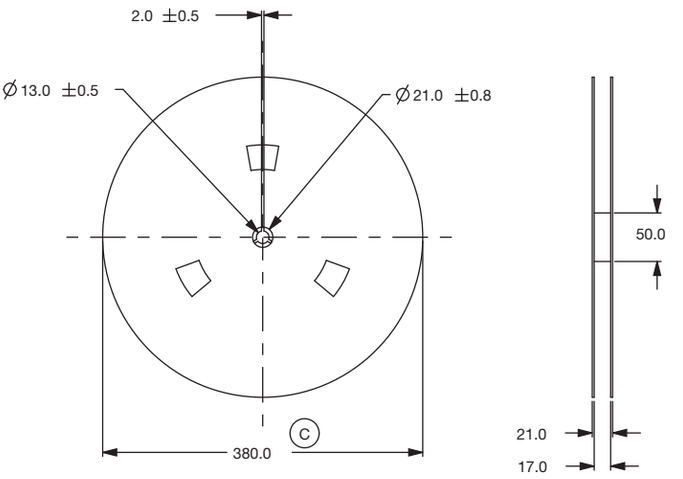

REEL

HDT0104

HDT0104

PART NUMBER	PACKAGING	SCHEMATIC
HDT0104	TAPE & REEL 2,500 per reel	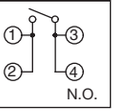

TRAVEL:

Pre-travel: .3 mm

Overtravel: 1.1 mm

Total: 1.4 mm

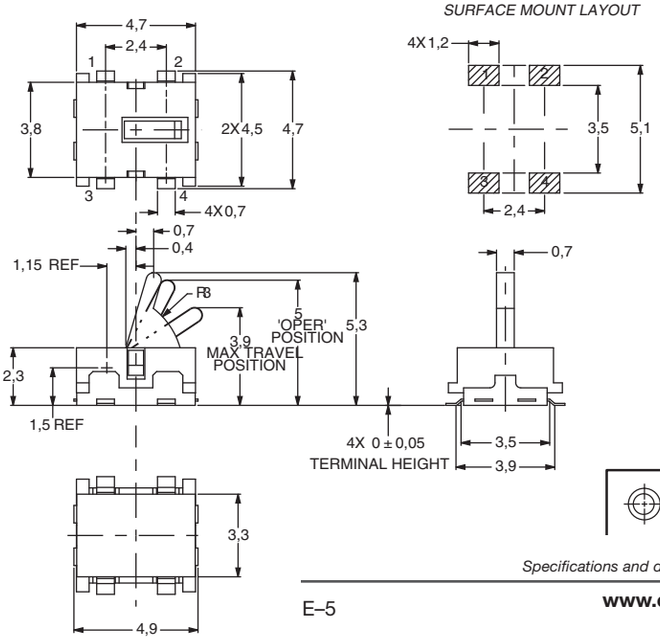

Third Angle Projection

Dimensions are shown: mm

Specifications and dimensions subject to change

HDT Series
Micro Mini Surface Mount Detect Switches

TAPE & REEL

HDT0104

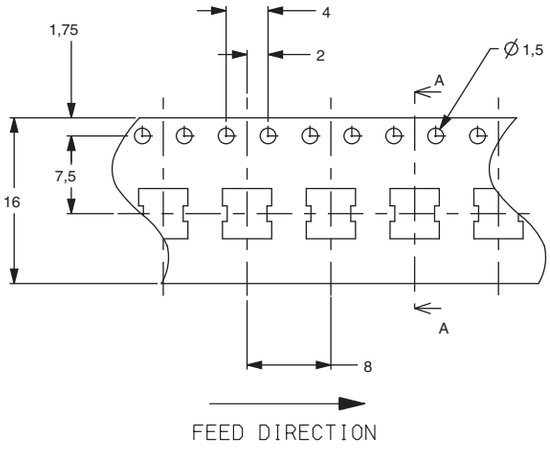

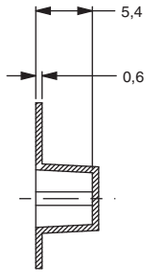

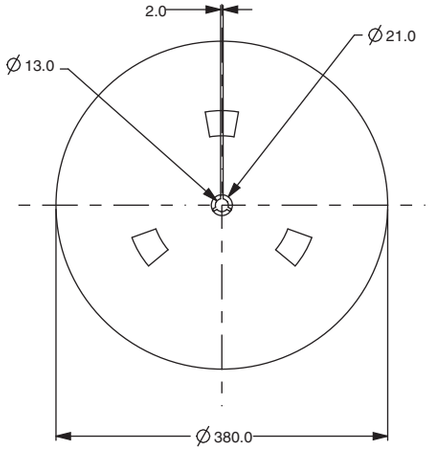

HDT0204

HDT0204

PART NUMBER	PACKAGING	SCHEMATIC
HDT0204	TAPE & REEL 1,400 per reel	① ③ ② ④ N.O.

TRAVEL:

Pre-travel: .3 mm

Overtravel: 1.1 mm

Total: 1.4 mm

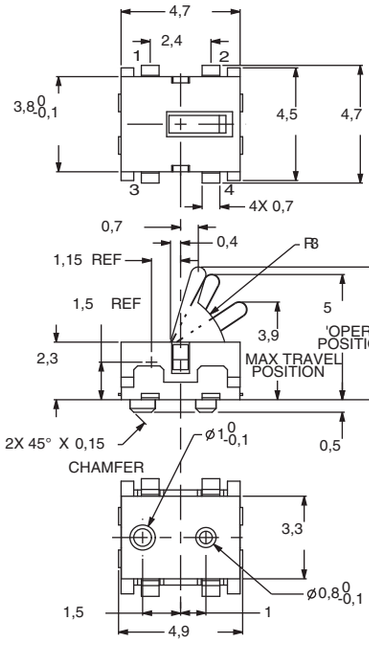

SURFACE MOUNT LAYOUT

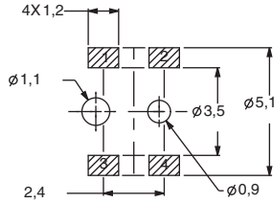

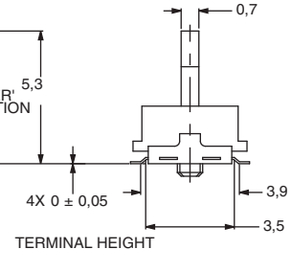

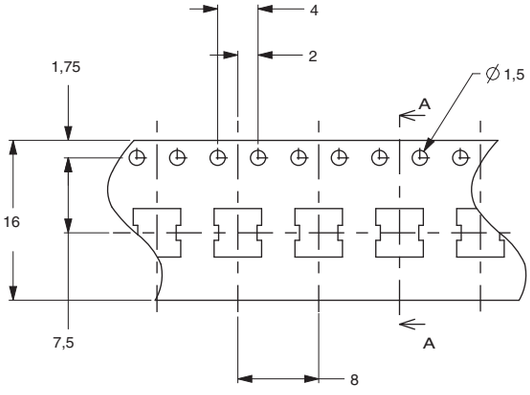

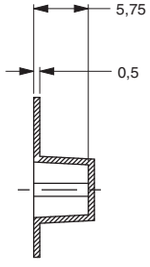

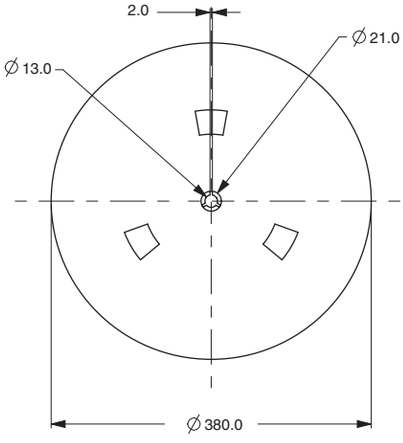

Features/Benefits

- *Compact design*
- *Low actuation force*
- *Detect mechanical movement*
- *Left and right options*
- *Right angle options*

Typical Applications

- *Computer peripherals*
- *Office equipment*
- *Consumer electronics*
- *Appliances*
- *Audio and visual equipment*

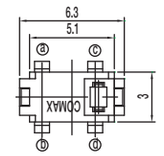

PART NUMBER	PACKAGING	SCHEMATIC
DS-02005	1,000 pieces	1P - 1T 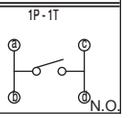

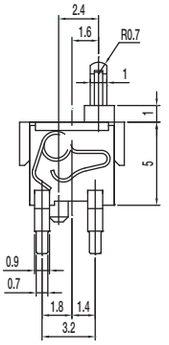

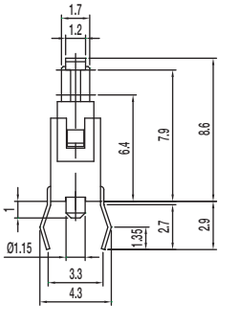

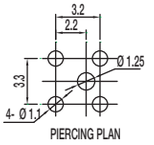

Specifications

CONTACT ARRANGEMENT: SPST, NO
CONTACT RATING: 100mA @ 30 VDC
OPERATING LIFE: 50,000 cycles
OPERATING FORCE: 50 gf max.
PRE-TRAVEL: 0.7 mm
TOTAL TRAVEL: 2.6 mm
INITIAL CONTACT RESISTANCE: 1 Ω max.
INSULATION RESISTANCE: 100 M Ω min. @ 100 VDC 60 sec.
DIELECTRIC STRENGTH: 100 V AC (50-60Hz) 60 sec.
OPERATING TEMPERATURE: –20°C to +70°C.

Materials

KNOB: PA
COVER: PA
SPRING: Gold plated, copper alloy
HOUSING: PA
TERMINAL: Silver plated, copper alloy

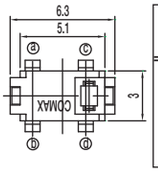

PART NUMBER	PACKAGING	SCHEMATIC
DS-02005 (30)	1,000 pieces	1P - 1T 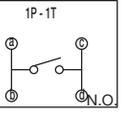

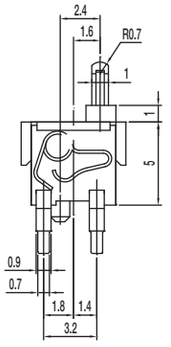

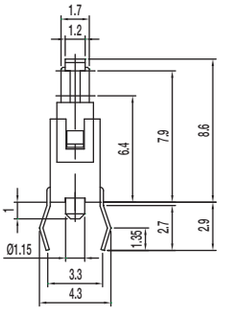

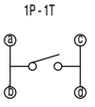

SCHEMATIC

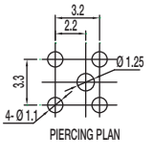

PIERCING PLAN

Specifications

CONTACT ARRANGEMENT: SPST, NO
CONTACT RATING: 100mA @ 30 VDC
OPERATING LIFE: 50,000 cycles
OPERATING FORCE: 30 gf max.
PRE-TRAVEL: 0.7 mm
TOTAL TRAVEL: 2.2 mm
INITIAL CONTACT RESISTANCE: 1 Ω max.
INSULATION RESISTANCE: 100 M Ω min. @ 100 VDC 60 sec.
DIELECTRIC STRENGTH: 100 V AC (50-60Hz) 60 sec.
OPERATING TEMPERATURE: –20°C to +70°C.

Materials

KNOB: PA
COVER: PA
SPRING: Gold plated, copper alloy
HOUSING: PA
TERMINAL: Silver plated, copper alloy

DS Series
Detect Switch

PART NUMBER	PACKAGING	SCHEMATIC
DS-02005-A	1,000 pieces	1P - 1T N.O.

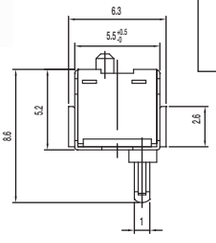

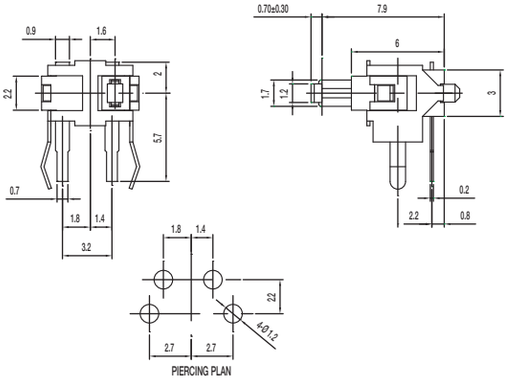

Specifications

CONTACT ARRANGEMENT: SPST, NO
CONTACT RATING: 100mA @ 30 VDC
OPERATING LIFE: 50,000 cycles
OPERATING FORCE: 50 gf max.
PRE-TRAVEL: 0.7 mm
TOTAL TRAVEL: 2.6 mm
INITIAL CONTACT RESISTANCE: 1 Ω max.
INSULATION RESISTANCE: 100 M Ω min. @ 100 VDC 60 sec.
DIELECTRIC STRENGTH: 100 V AC (50-60Hz) 60 sec.
OPERATING TEMPERATURE: –20ºC to +70ºC.

Materials

KNOB: PA
COVER: PA
SPRING: Gold plated, copper alloy
HOUSING: PA
TERMINAL: Silver plated, copper alloy

PART NUMBER	PACKAGING	SCHEMATIC
DS-21805	2,500 pieces	N.O.

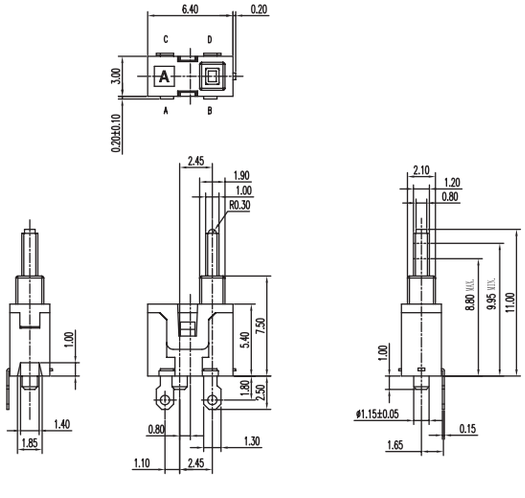

Specifications

CONTACT ARRANGEMENT: SPDT
CONTACT RATING: 5mA @ 5 VDC
OPERATING LIFE: 100,000 cycles
OPERATING FORCE: 36 gf
TOTAL TRAVEL: 2.20 mm
INITIAL CONTACT RESISTANCE: 1 Ω max.
INSULATION RESISTANCE: 100 M Ω min. @ 100 VDC 60 sec.
DIELECTRIC STRENGTH: 100 V AC (50-60Hz) 60 sec.
OPERATING TEMPERATURE: –20ºC to +70ºC.

Materials

KNOB: POM
COVER: PA46
SPRING: Silver plated
HOUSING: PPS
TERMINAL: Silver plated

PART NUMBER	PACKAGING	SCHEMATIC
DS-203-A	2,500 pieces	1P - 1T 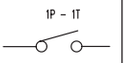 N.O.

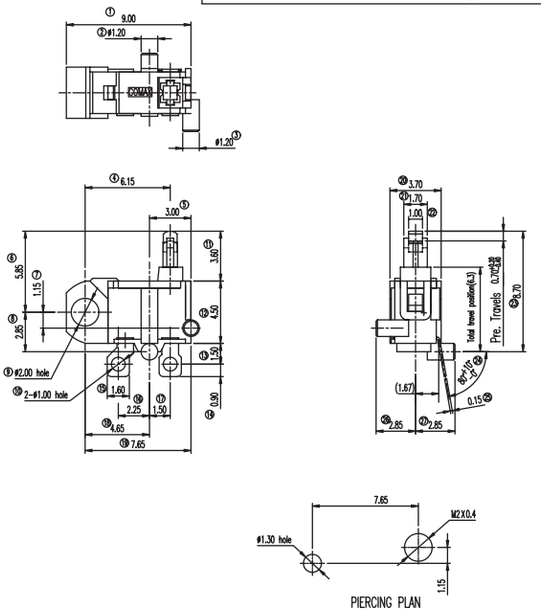

Specifications

CONTACT ARRANGEMENT: SPST
CONTACT RATING: 100mA @ 30 VDC
OPERATING LIFE: 50,000 cycles
OPERATING FORCE: 36 gf
PRE TRAVEL: 0.70 +0.20/-0.40 mm
INITIAL CONTACT RESISTANCE: 1 Ω max.
INSULATION RESISTANCE: 50 M Ω min. @ 250 VDC 60 sec.
DIELECTRIC STRENGTH: 250 V AC (50-60Hz) 60 sec.
OPERATING TEMPERATURE: –20ºC to +70ºC.

Materials

KNOB: POM
COVER: PA
SPRING: Gold plated
HOUSING: PA
TERMINAL: Silver plated

PART NUMBER	PACKAGING	SCHEMATIC
DS-040-02	1,000 pieces	1P - 1T 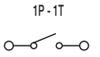 N.O.

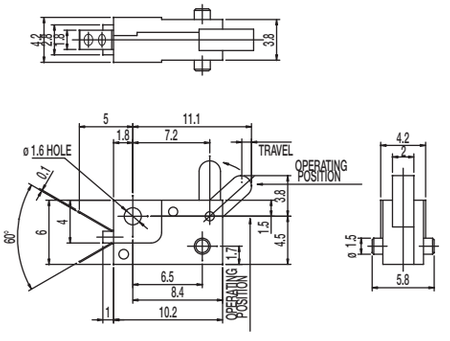

Specifications

CONTACT ARRANGEMENT: SPST, NO
CONTACT RATING: 0.1A @ 16 VDC
OPERATING LIFE: 20,000 cycles
OPERATING FORCE: 30 ± 15 gf
TRAVEL: 0.90 ± 0.20 mm
INITIAL CONTACT RESISTANCE: 40 m Ω max.
INSULATION RESISTANCE: 100 M Ω min. @ 250 VDC 60 sec.
DIELECTRIC STRENGTH: 250 V AC (50-60Hz) 60 sec.
OPERATING TEMPERATURE: –20ºC to +70ºC.

Materials

LEVER: POM
CASE: PBT
COVER: PC

DS Series
Detect Switch

PART NUMBER	PACKAGING	SCHEMATIC
DS-080	1,000 pieces	1P – 2T 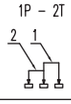 N.O.

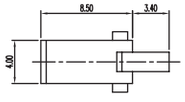

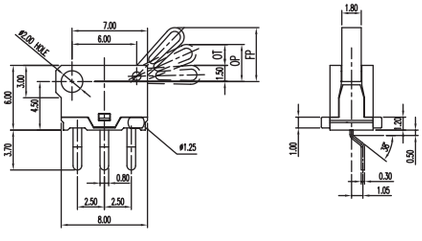

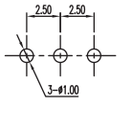

PIERCING PLAN

Specifications

CONTACT ARRANGEMENT: SPDT
CONTACT RATING: 100mA @ 30 VDC
OPERATING LIFE: 20,000 cycles
OPERATING FORCE: 30 ± 20 gf
OVER TRAVEL: 2.0 ± 0.40 mm
INITIAL CONTACT RESISTANCE: 200 m Ω max.
INSULATION RESISTANCE: 10 M Ω min. @ 250 VDC 60 sec.
DIELECTRIC STRENGTH: 250 V AC (50-60Hz) 60 sec.
OPERATING TEMPERATURE: –20ºC to +70ºC.

Materials

KNOB: POM
COVER: PA46
SLIDER: PBT
HOUSING: PA46
TERMINAL: Silver plated

PART NUMBER	PACKAGING	SCHEMATIC
DS-080-C PA	1,000 pieces	1P - 2T N.O.

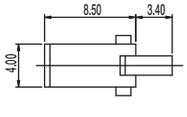

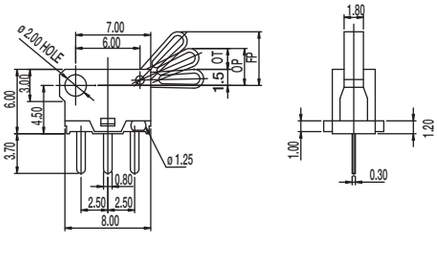

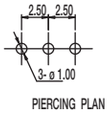

PIERCING PLAN

Specifications

CONTACT ARRANGEMENT: SPDT
CONTACT RATING: 100mA @ 30 VDC
OPERATING LIFE: 20,000 cycles
OPERATING FORCE: 30 ± 20 gf
OVER TRAVEL: 2.0 ± 0.40 mm
INITIAL CONTACT RESISTANCE: 200 m Ω max.
INSULATION RESISTANCE: 10 M Ω min. @ 250 VDC 60 sec.
DIELECTRIC STRENGTH: 250 V AC (50-60Hz) 60 sec.
OPERATING TEMPERATURE: –20ºC to +70ºC.

Materials

KNOB: POM
COVER: PA46
SLIDER: PBT
HOUSING: PA46
TERMINAL: Silver plated

PART NUMBER	PACKAGING	SCHEMATIC
DS-09005-02 BK	500 pieces	Ⓐ→ ⊸ Ⓑ N.O.

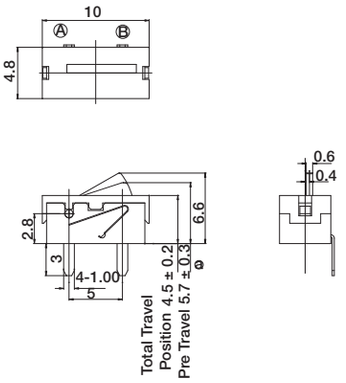

Specifications

CONTACT ARRANGEMENT: SPST
CONTACT RATING: 1mA @ 5 VDC
OPERATING LIFE: 100,000 cycles
OPERATING FORCE: 50 gf max.
TOTAL TRAVEL: 4.5±0.2 mm
INITIAL CONTACT RESISTANCE: 500 m Ω max.
INSULATION RESISTANCE: 100 M Ω min. @ 500 VDC 60 sec.
DIELECTRIC STRENGTH: 500 V AC (50-60Hz) 60 sec.
OPERATING TEMPERATURE: –20°C to +70°C.

Materials

LEVER: POM
COVER: PA
HOUSING: PA
TERMINAL: Silver plated

PART NUMBER	PACKAGING	SCHEMATIC
DS-09005-02 RP	500 pieces	Ⓐ→ ⊸ Ⓑ N.O.

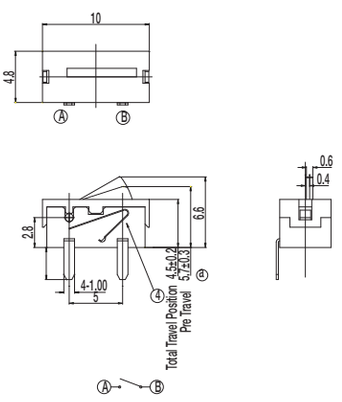

Specifications

CONTACT ARRANGEMENT: SPST
CONTACT RATING: 1mA @ 5 VDC
OPERATING LIFE: 100,000 cycles
OPERATING FORCE: 50 gf max.
TOTAL TRAVEL: 4.5±0.2 mm
INITIAL CONTACT RESISTANCE: 500 m Ω max.
INSULATION RESISTANCE: 100 M Ω min. @ 500 VDC 60 sec.
DIELECTRIC STRENGTH: 500 V AC (50-60Hz) 60 sec.
OPERATING TEMPERATURE: –20°C to +70°C.

Materials

LEVER: POM
COVER: PA
HOUSING: PA
TERMINAL: Silver plated

HDS Series
Micro Mini Side Actuated Surface Mount Detect Switches

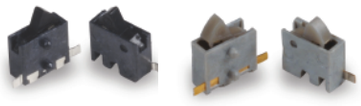

Features/Benefits

- ***Low profile package sits just 1.4 mm off PCB***
- ***Design allows top or side actuation***
- ***Right and left options available***
- ***Low actuation force, 30 grams max.***
- ***Pick and place compatible, available in tape & reel packaging***
- ***RoHS compliant and compatible***

Typical Applications

- ***Consumer electronics***
- ***Computers***
- ***Medical devices***
- ***Mobile Communications***
- ***ATCA and MicroTCA devices***

Specifications

CONTACT RATING: 1 mA 5 VDC

MECHANICAL AND ELECTRICAL LIFE: 100,000 cycles min.

CONTACT RESISTANCE: 1 Ω max. initial.

INSULATION RESISTANCE: 100 M Ω min. between adjacent contacts.

OPERATING TEMPERATURE: -40ºC to + 80ºC

STORAGE TEMPERATURE: -40ºC to + 80ºC

PACKAGING: tape & reel; 5,000 per reel.

TRAVEL:

Pre-travel .17 mm min.

Overtravel: .5 mm min.

Total: 1.07 mm

Materials

BASE: LCP HDS001L: Gray HDS001R: Black

COVER: PA 46 (UL94V-0)

ACTUATOR: PA 46 (UL94V-0) HDS001L: Gray HDS001R: Black

MOVABLE BLADE: Stainless Steel, Ag over Ni plating.

TERMINALS: Phosphor Bronze, Ag plating.

NOTE: Specifications and materials listed above are for switches with standard options. For information on specific and custom switches, consult Customer Service Center.

Build-A-Switch

Complete part numbers for HDS Series are shown below.

PART NUMBER	PACKAGING	SCHEMATIC
HDS001R	TAPE & REEL	N.O.

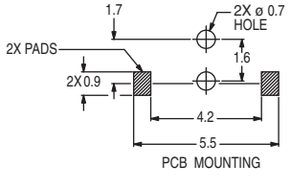

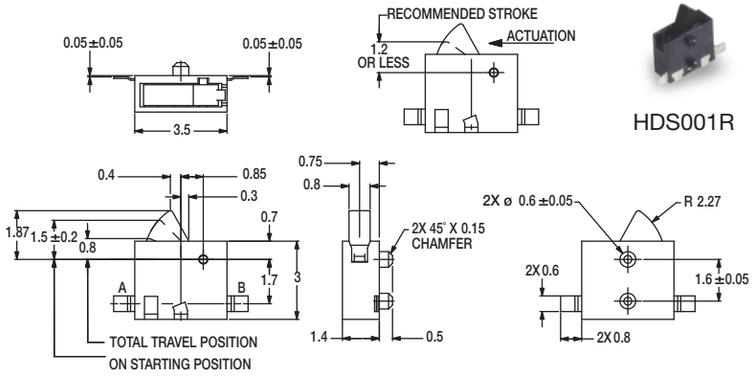

PART NUMBER	PACKAGING	SCHEMATIC
HDS001L	TAPE & REEL	N.O.

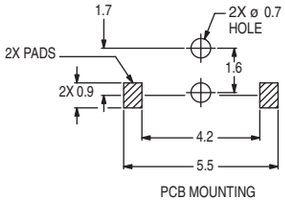

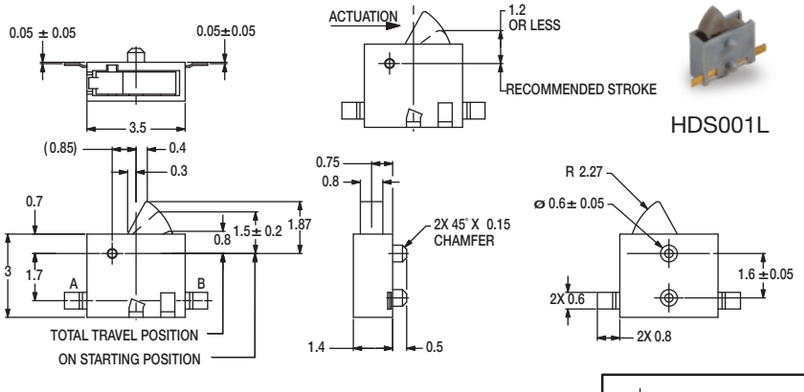

Third Angle Projection

Dimensions are shown: mm

Specifications and dimensions subject to change

TAPE & REEL

HDS001R

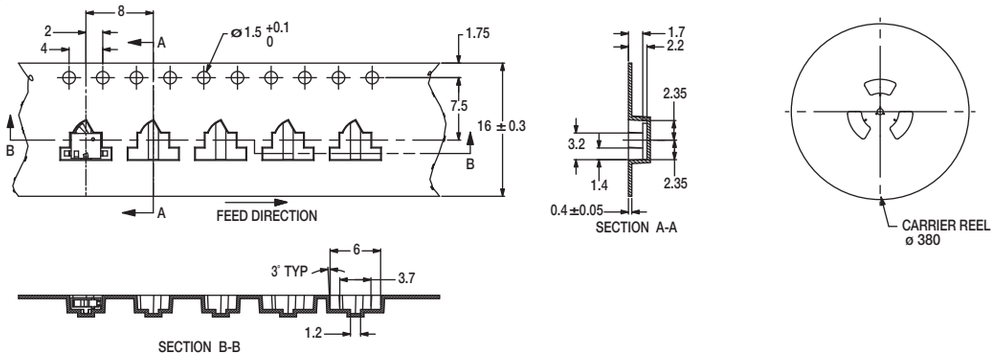

HDS001L

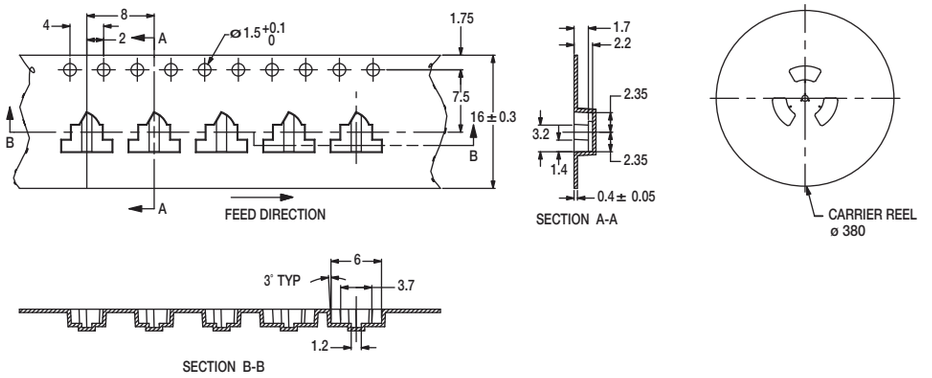

NOTE: Quantity per reel: 5,000 pieces

Third Angle Projection

Dimensions are shown: mm
Specifications and dimensions subject to change

HDP Series
Micro Mini Side Actuated Surface Mount Detect Switches

Features/Benefits

- ***Low profile***
- ***Side actuation***
- ***Right and left options available***
- ***Low actuation force***
- ***Lead free and halogen free***

Typical Applications

- ***Consumer electronics***
- ***Computers***
- ***Medical devices***
- ***Mobile Communications***
- ***ATCA and MicroTCA devices***

Specifications

CONTACT RATING: 1 mA 5 VDC
MECHANICAL AND ELECTRICAL LIFE: 100,000 cycles min.
CONTACT RESISTANCE: < 500 m Ω initial.
INSULATION RESISTANCE: > 100 M Ω
OPERATING TEMPERATURE: -20ºC to + 70ºC
STORAGE TEMPERATURE: -30ºC to + 80ºC
PACKAGING: tape & reel; 2,500 per reel.
TRAVEL:

Pre-travel	0.15 mm min.
"ON" starting position	2.96 +/- 0.25 mm
Total:	1.3 mm
Mechanical:	1.9 mm

Materials

BASE: PA 46 (UL94HB) - halogen free
ACTUATOR: PA 46 (UL94HB) - halogen free
HDP001R - black body/actuator
HDP001L - grey body/actuator
MOVABLE CONTACTS: Stainless Steel, Silver over nickel plate.
FIXED CONTACTS/TERMINALS: Phosphor Bronze, Silver plate.

NOTE: Specifications and materials listed above are for switches with standard options. For information on specific and custom switches, consult Customer Service Center.

Build-A-Switch

Complete part numbers for HDP Series are shown below.

PART NUMBER	PACKAGING	SCHEMATIC
HDP001R Black body/ actuator	TAPE & REEL	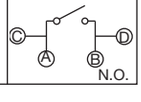

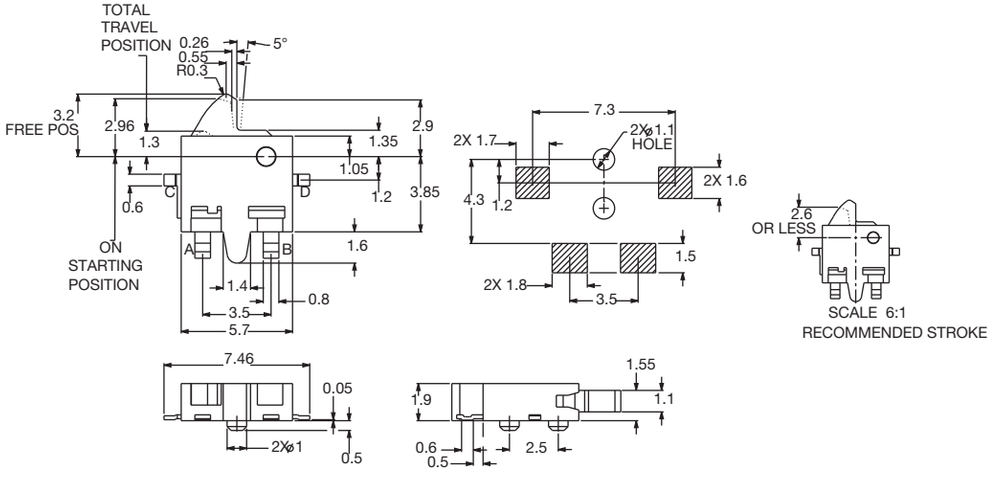

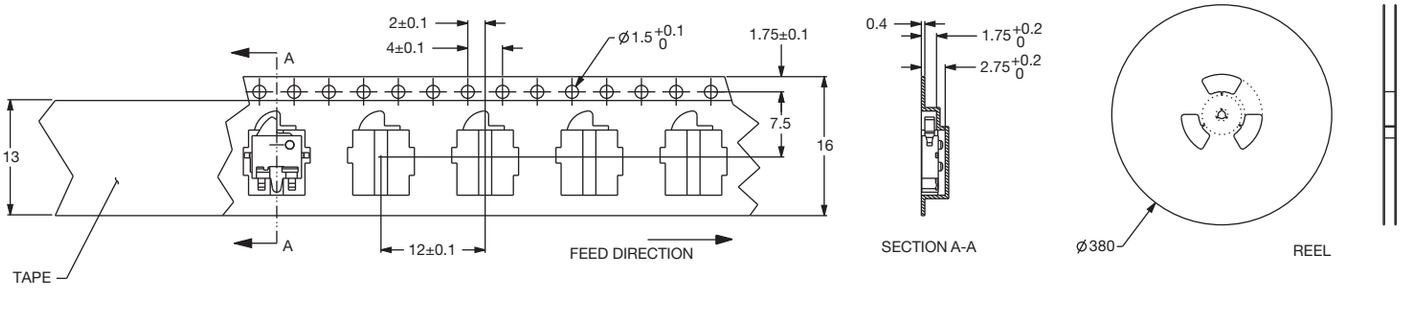

Detect E

Dimensions are shown: mm
Specifications and dimensions subject to change

PART NUMBER	PACKAGING	SCHEMATIC
HDP001L Grey body/ actuator	TAPE & REEL	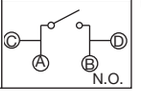

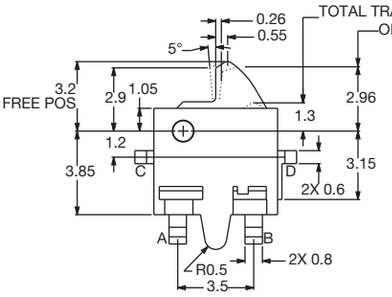

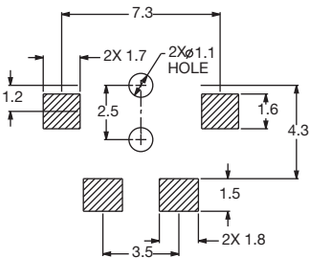

PCB RECOMMENDED

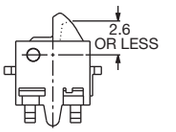

SCALE 6:1
RECOMMENDED STROKE

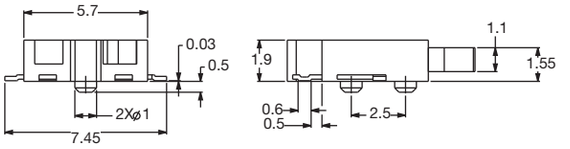

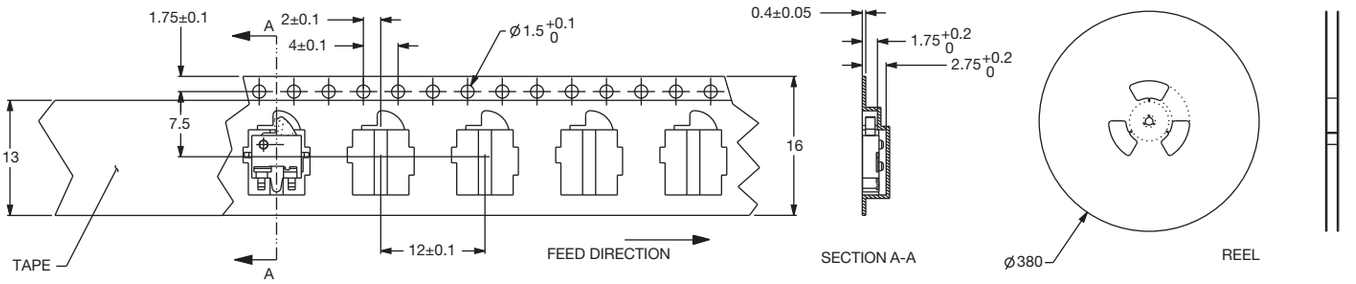

E

Detect

SDP Series
Micro Mini Pendulum SMT Detect Switch

Features/Benefits

- ***SMT process compatible***
- ***Low profile***
- ***Right or left side actuated***
- ***Low actuation force***
- ***Low halogen / halogen free***

Typical Applications

- ***Consumer electronics***
- ***Computers***
- ***Medical devices***
- ***ATCA and MicroTCA devices***

Specifications

CONTACT RATING: 5 VDC 1mA (0.1mA to 100mA max)
MECHANICAL AND ELECTRICAL LIFE: 50,000 cycles
CONTACT RESISTANCE: 500 m Ω max. initial.
INSULATION RESISTANCE: 100 M Ω (500VDC for 1 min.)
OPERATING TEMPERATURE: -20°C to + 70°C
STORAGE TEMPERATURE: -30°C to + 80°C
PACKAGING: Tape & reel 4,550 pieces

Materials

BASE: LCP (black)
COVER: PA 46 (black)
ACTUATOR: LCP (black)
MOVABLE BLADE: Stainless Steel, Ag over Ni plating.
TERMINALS: Phosphor Bronze, Ag over Ni plating.
SOLDERABILITY: Lead free compatible - No clean.

NOTE: Specifications and materials listed above are for switches with standard options. For information on specific and custom switches, consult Customer Service Center.

Build-A-Switch

Complete part numbers for SDP Series are shown below.

SDP002

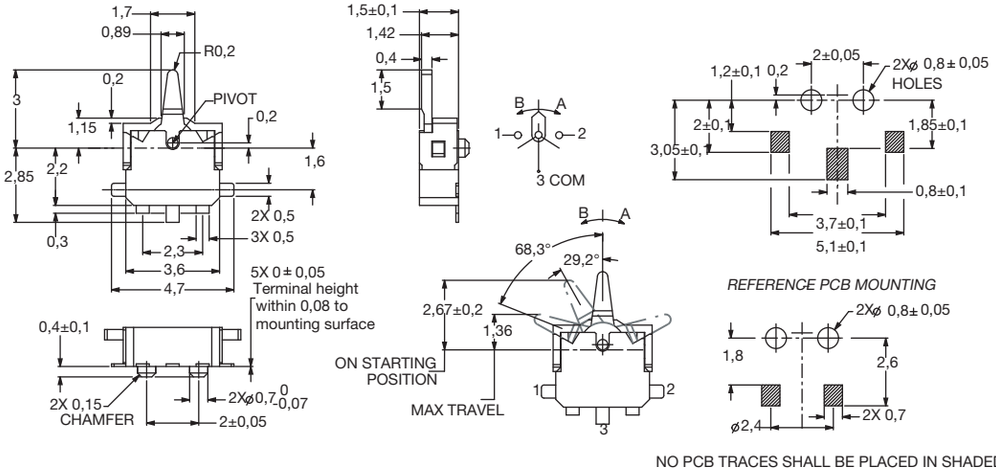

NO PCB TRACES SHALL BE PLACED IN SHADED AREAS

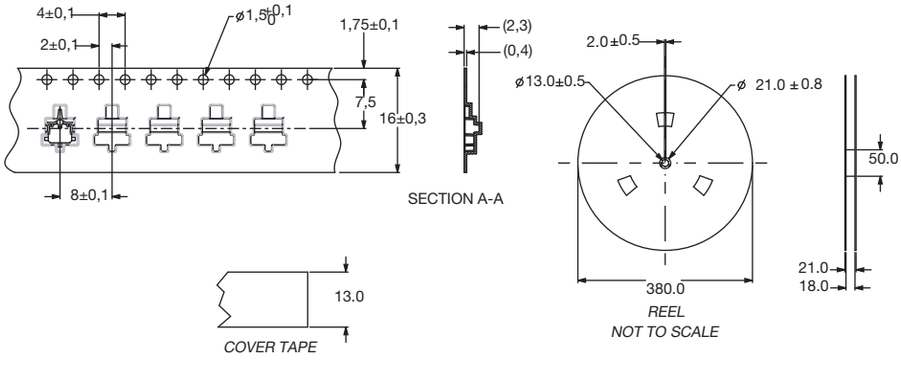

SDS Series
Side Actuated Detect Switches

Features/Benefits

- ***Low profile package sits just 2mm off PCB***
- ***2mm overtravel ideal for detector applications***
- ***Low actuation force (75 grams max.)***
- ***Pick & place compatible, available in tape & reel packaging***
- ***RoHS compliant and compatible***

Typical Applications

- ***Medical devices***
- ***Consumer electronic devices***
- ***PCB lock cam detect***
- ***Smart card detect***
- ***ATCA and MicroTCA***

Specifications

CONTACT RATING: 100 mA @ 12 VDC.
MECHANICAL & ELECTRICAL LIFE: 50,000 cycles.
CONTACT RESISTANCE: 100 m Ω max. initial.
INSULATION RESISTANCE: 10 M Ω min. @ 100 VDC.
OPERATING TEMPERATURE: –40ºC to +85ºC.
SOLDERABILITY: IR compatible, no wash. 260ºC max.
PACKAGING: Bulk or tape & reel (3000 per reel).

Materials

BASE: Glass filled LCP (UL 94V-0).
ACTUATOR: Glass Filled LCP (UL94V-0).
SURFACE PLATE: Nickel silver w/silver plate.
MOVABLE CONTACT: Phosphor bronze, see table for plating.
TERMINALS: Phosphor bronze, see table for plating.

NOTE: Specifications and materials listed above are for switches with standard options. For information on specific and custom switches, consult Customer Service Center.

How to Order

Complete part numbers for SDS Series Switches are shown below.

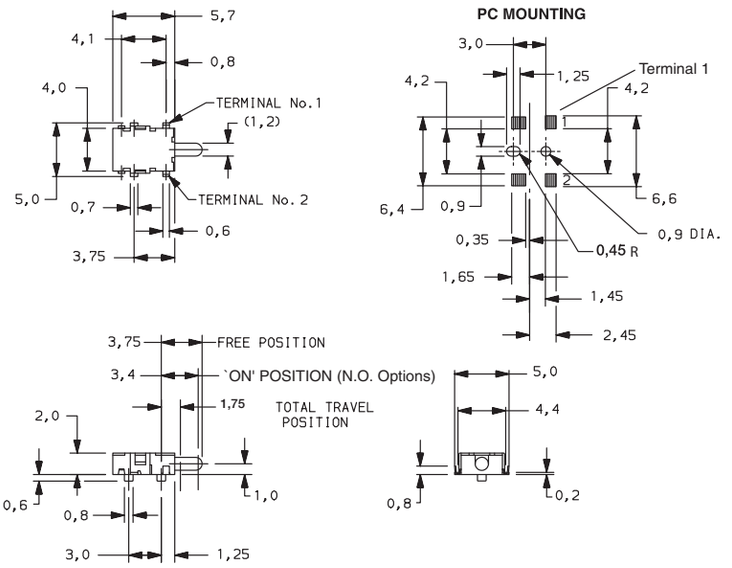

PART NUMBER	HOUSING COLOR	PACKAGING	SCHEMATIC	Contact Plating	Terminal Plating
SDS001	Black	Bulk	N.O.	Silver Clad	Silver Plate
SDS001R		Tape & Reel			
SDS002	White	Bulk	N.C.		
SDS002R		Tape & Reel			
SDS004	Black	Bulk	N.O.	Gold Flash	Gold Flash
SDS004R		Tape & Reel			
SDS005	White	Bulk	N.C.		
SDS005R		Tape & Reel			

SDS001
SPST

TAPE & REEL

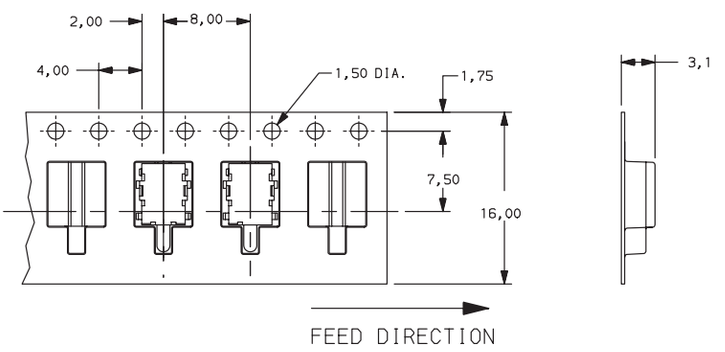

Third Angle Projection

Dimensions are shown: mm
Specifications and dimensions subject to change

DDS Series
Micro Mini Thru-hole Detect Switches

Features/Benefits

- ***Vertical or horizontal actuation***
- ***2mm overtravel—Ideal for detector applications***
- ***Low actuations force (less than 40 grams)***
- ***RoHS compliant and compatible***

Typical Applications

- ***Detect the presence of a mechanical device***
- ***Medical devices***
- ***Consumer electronic devices***

Specifications

CONTACT RATING: 0.1A @ 30 VDC.
MECHANICAL & ELECTRICAL LIFE: 50,000 cycles.
CONTACT RESISTANCE: 150 m Ω max. initial.
INSULATION RESISTANCE: 100 M Ω min. @ 100 VDC.
OPERATING TEMPERATURE: –20ºC to +70ºC.
DIELECTRIC STRENGTH: 100 volts AC @ 60 Hz.
PACKAGING: Bulk.

Materials

HOUSING: P.P.S.
ACTUATOR: PA66
MOVABLE CONTACT: Tin bronze, silver plated.

NOTE: Specifications and materials listed above are for switches with standard options. For information on specific and custom switches, consult Customer Service Center.

How To Order

Complete part numbers for DDS Series Switches are shown below.

DDS001
SPST

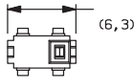

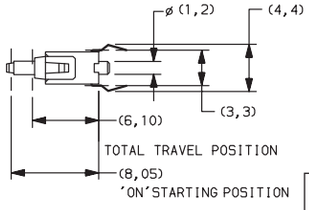

PART NUMBER	DESCRIPTION	SCHEMATIC
DDS001	Vertical Actuator	1 ● ● 2 SPST N.O.

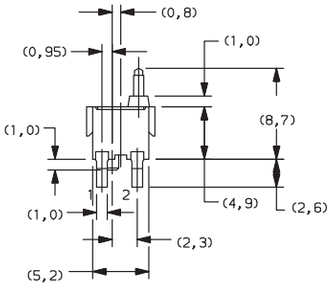

PC MOUNTING

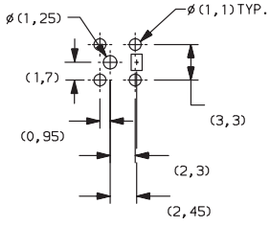

Third Angle Projection

Dimensions are shown: mm
Specifications and dimensions subject to change

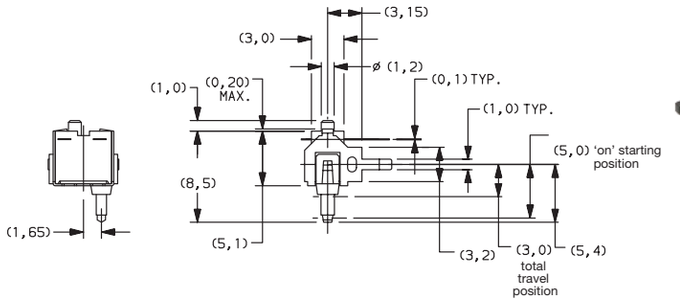

DDS002
SPST

PART NUMBER	DESCRIPTION	SCHEMATIC
DDS002	Right angle, actuator right	1 ● ● 2 SPST N.O.

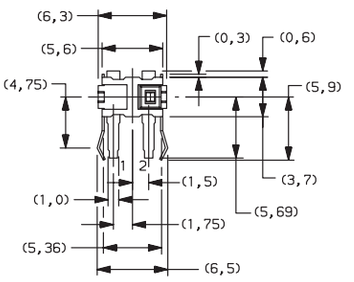

PC MOUNTING

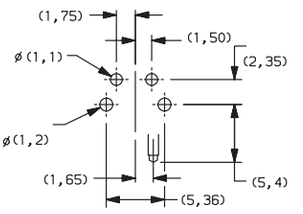

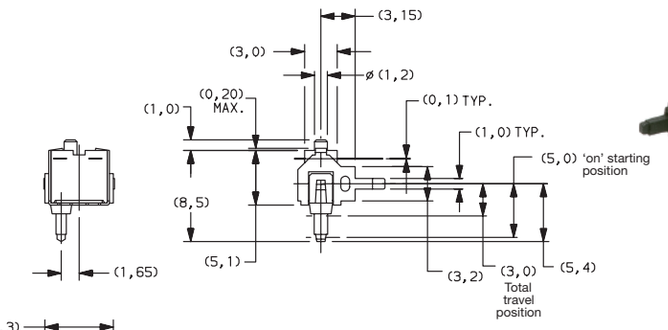

PART NUMBER	DESCRIPTION	SCHEMATIC
DDS003	Right angle, actuator left	1 ● ● 2 SPST N.O.

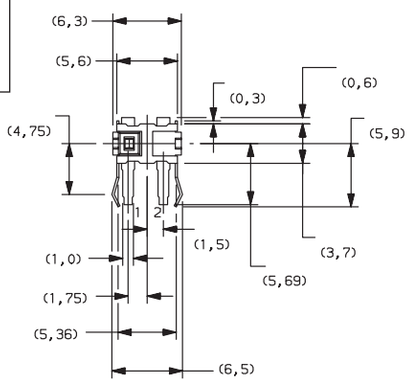

PC MOUNTING

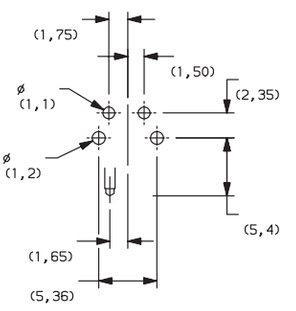

Third Angle Projection

Dimensions are shown: mm
Specifications and dimensions subject to change

MDS Series
Micro Snap-acting Detect Switches

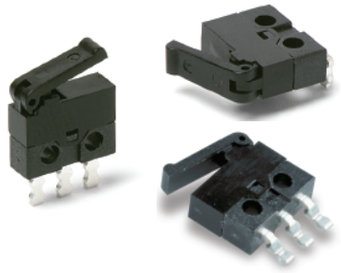

Features/Benefits

- ***Snap-acting tactile feel***
- ***Small package size***
- ***Available in vertical or right angle PCB mount***
- ***RoHS compliant and compatible***

Typical Applications

- ***Detect the presence of a mechanical device***
- ***Medical devices***
- ***Consumer electronic devices***
- ***ATCA or MicroTCA devices***

Specifications

CONTACT RATING: 300mA @ 30 VDC.
MECHANICAL & ELECTRICAL LIFE: 30,000 operations.
CONTACT RESISTANCE: 100 m Ω max.
OPERATING TEMPERATURE: –25°C to +70°C.
SOLDERABILITY: According to lead free solder profiles.
PACKAGING: Available in bulk or tape and reel.
OPERATING FORCE: 50 g Max.
RELEASE FORCE: 3g Min.

Materials

BASE: PA9T
COVER & ACTUATOR: PA9T
MOVABLE CONTACT: Copper alloy, silver plated.
STATIONARY CONTACTS: Copper alloy, silver plated.
TERMINALS: Copper alloy, silver plated.

NOTE: MDS series is RoHS compliant, and compatible. See technical data section of this catalog for RoHS compliant and compatible definitions and specifications.

NOTE: Specifications and materials listed above are for switches with standard options. For information on specific and custom switches, consult Customer Service Center.

Build-A-Switch

To order, simply select desired option from each category and place in the appropriate box. Available options are shown and described on pages E-21 and E-25. For additional options not shown in catalog, consult Customer Service Center.

M D S

Series
MDS SPDT

Operating Force
65 50 grams

Electrical Rating
00A 300mA @ 30 VDC

Actuator
L02 Standard lever
L03 Higher OP lever

Termination Style
PS PC Thru-hole, Short
PL PC Thru-hole, Long
RS PC Thru-hole, Short, Right bend
RL PC Thru-hole, Long, Right bend
LS PC Thru-hole, Short, Left bend
LL PC Thru-hole, Long, Left bend
SL SMT, Left
SR SMT, Right
CL SMT, Left bracket with pins
CR SMT, Right bracket with pins
BL SMT, Left bracket no pins
BR SMT, Right bracket no pins

SERIES M D S

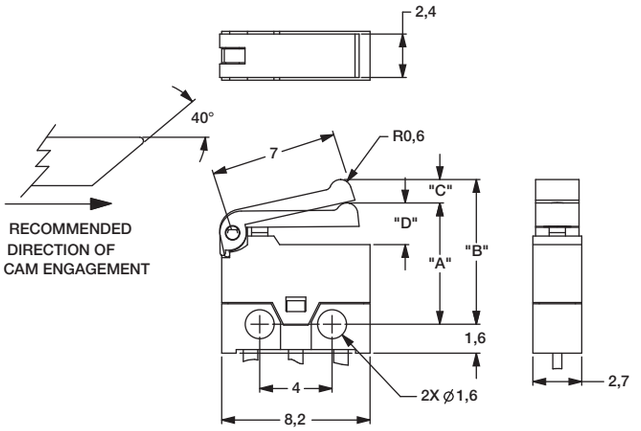

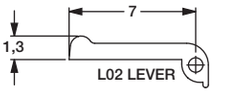

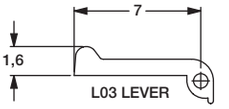

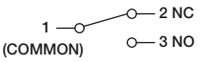

SCHEMATIC SPDT

OPERATING CHARACTERISTICS			
		LEVER L02	LEVER L03
OPERATING POSITION	DIM 'A'	6.7±0.5	7.0 +/-0.5
FREE POSITION	DIM 'B'	8 MAX	8.5 MAX
PRETRAVEL	DIM 'C'	1,8 MAX	1.8 MAX
OVER TRAVEL	DIM 'D'	0.3 MIN	0.3 MIN
CONTACT RATING		0.3A @ 30 VDC	0.3A @ 30VDC
OPERATING FORCE		50 GRAMS F. MAX	50 GRAMS F. MAX

OPERATING FORCE

OPTION CODE	OPERATING FORCE
65	50 grams max.

ELECTRICAL RATING

OPTION CODE	ELECTRICAL RATING
00A	300mA @ 30 V DC

ACTUATOR

L02 STANDARD LEVER

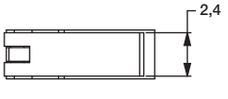

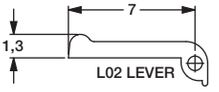

L03 HIGHER OP LEVER

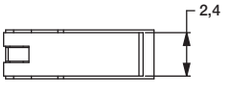

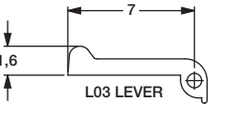

Third Angle Projection

Dimensions are shown: mm
Specifications and dimensions subject to change

TERMINATIONS

PCB Mounting Pattern

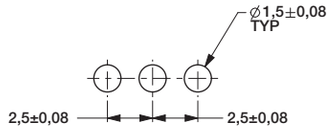

PCB MOUNTING

PS PC THRU-HOLE, SHORT STRAIGHT

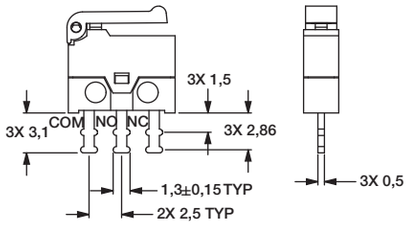

PL PC THRU-HOLE, LONG STRAIGHT

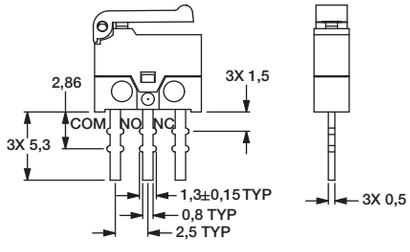

RS PC THRU-HOLE, SHORT RIGHT BEND

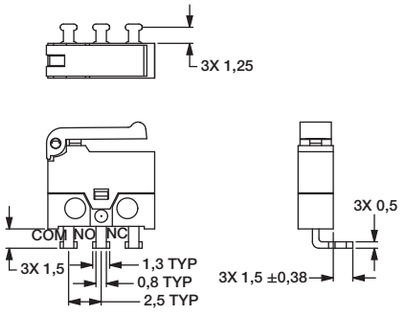

RL PC THRU-HOLE, LONG SHORT BEND

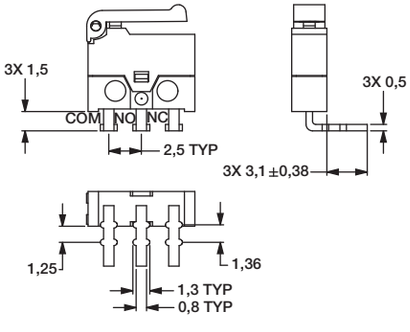

LS PC THRU-HOLE, SHORT LEFT BEND

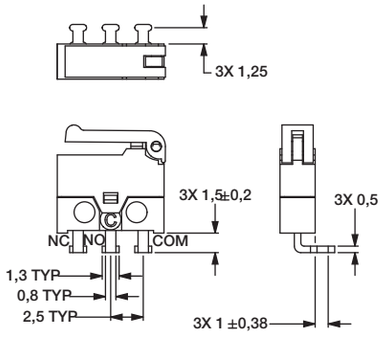

LL PC THRU-HOLE, LONG LEFT BEND

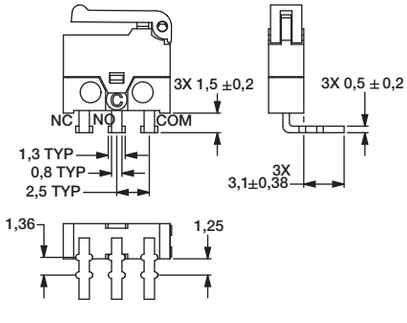

Third Angle Projection

Dimensions are shown: mm
Specifications and dimensions subject to change

TERMINATIONS

SL SMT, LEFT MOUNT

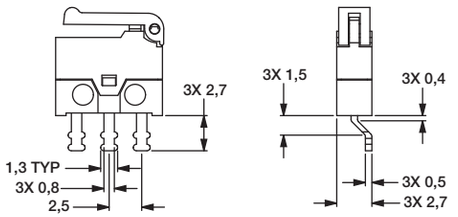

SMT Mounting Pattern

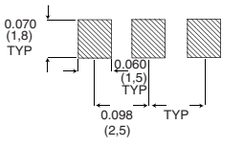

SR SMT, RIGHT MOUNT

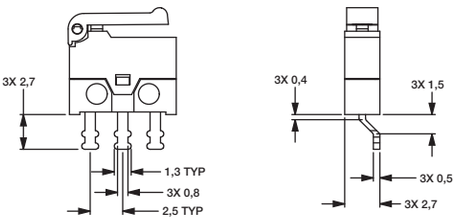

SMT Mounting Pattern

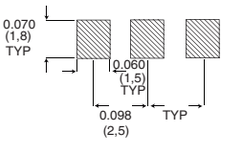

CL SMT, LEFT BRACKET WITH PINS

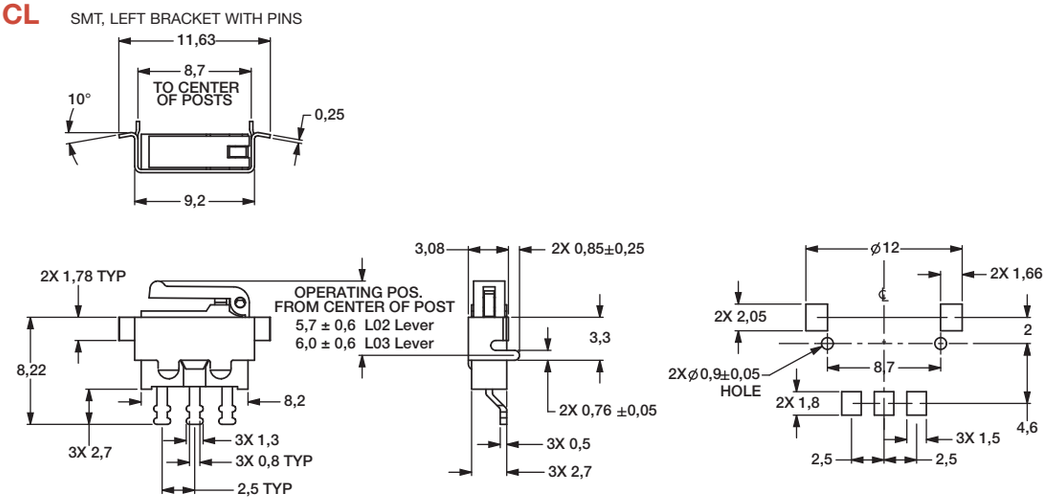

CR SMT, RIGHT BRACKET WITH PINS

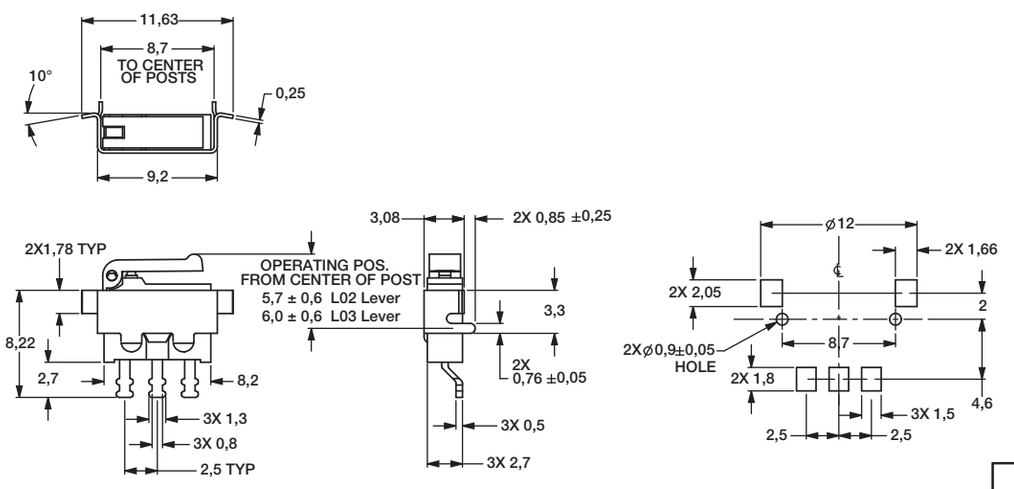

Third Angle Projection

Dimensions are shown: mm
Specifications and dimensions subject to change

TERMINATIONS

BL SMT, LEFT BRACKET NO PINS

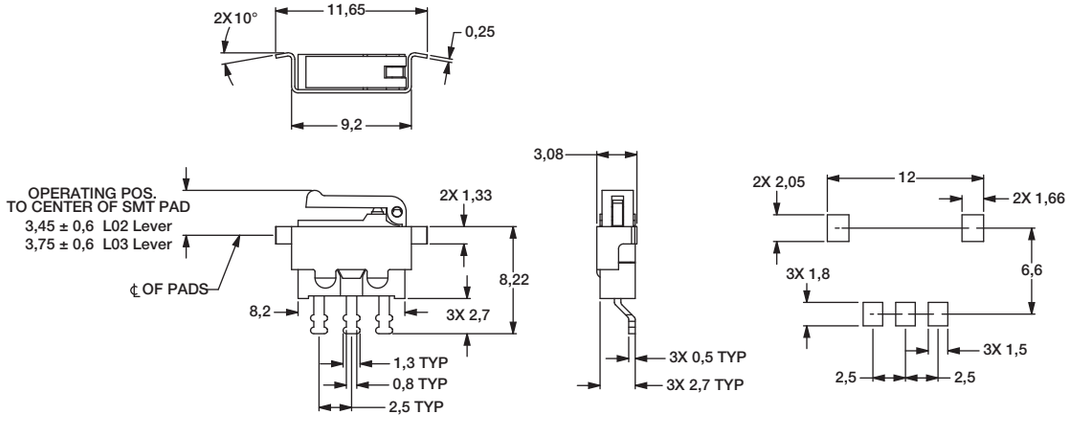

BR SMT, RIGHT BRACKET NO PINS

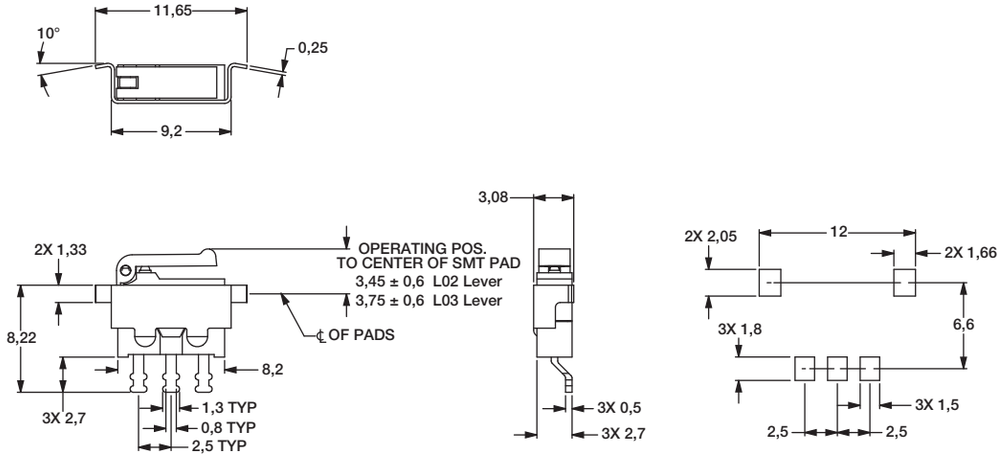

Third Angle Projection

Dimensions are shown: mm
Specifications and dimensions subject to change

TAPE & REEL

SL SMT, LEFT MOUNT

SR SMT, RIGHT MOUNT

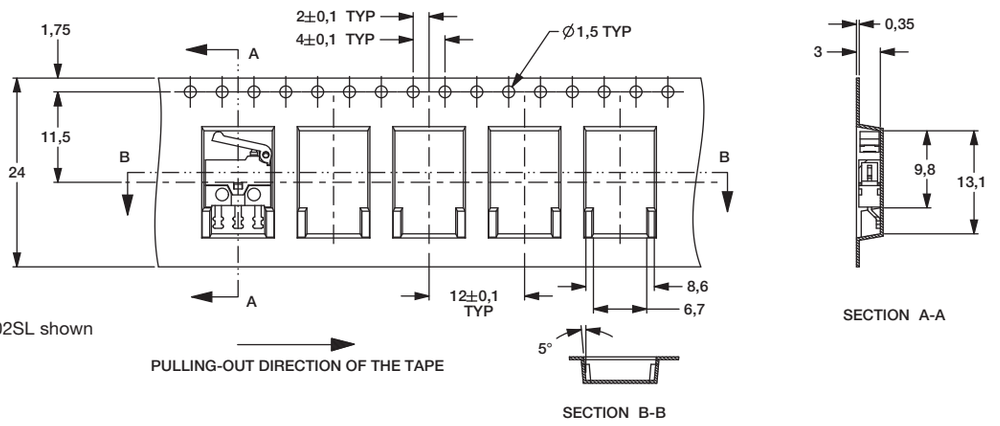

MDS6500AL02SL shown

CL SMT, LEFT MOUNT

CR SMT, RIGHT MOUNT

BL SMT, LEFT MOUNT

BR SMT, RIGHT MOUNT

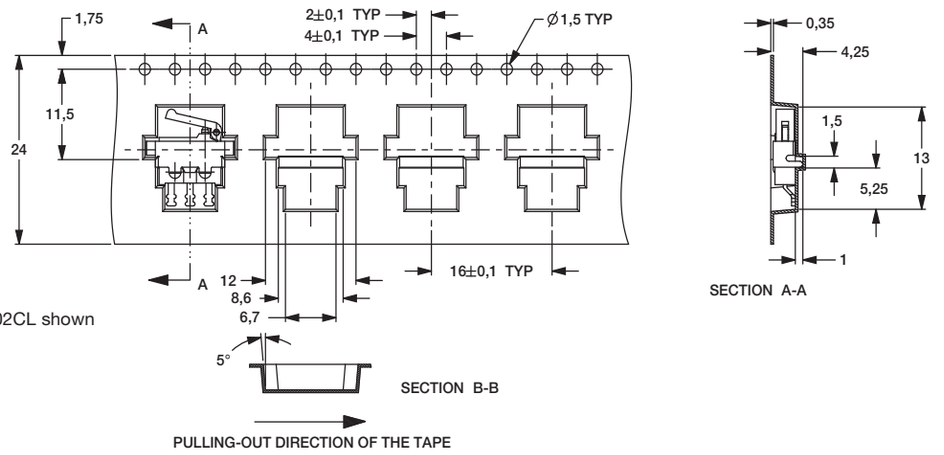

MDS6500AL02CL shown

Supplied in carrier tape meeting the EIA-481-2 standard for 24mm tape.

Packaging quantity: SL and SR; 1,600 pieces per reel
CL, CR, BL and BR; 1,000 pieces per reel

Third Angle Projection

Dimensions are shown: mm
Specifications and dimensions subject to change

KDS Series
Intrusion Switches

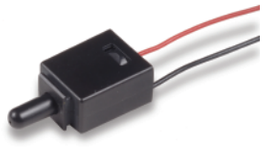

Features/Benefits

- ***Slot mount into chassis to reduce installation cost***
- ***Wire harness length & connector easily customized***
- ***Available in N.O. or N.C. configuration***
- ***RoHS compliant***

Typical Applications

- ***Intrusion/Alarm switch in network desktop PC***
- ***Intrusion/Alarm switch in telecommunication equipment***
- ***Intrusion/Alarm switch in cellular base station***

Specifications

CONTACT RATING: 0.4 VA max. @ 20 V AC or DC.

MECHANICAL & ELECTRICAL LIFE: 10,000 actuations min. at full load.

CONTACT RESISTANCE: 200 m Ω max. initial @ 2-4 V DC, 100mA.

INSULATION RESISTANCE: 10^9 Ω min.

OPERATING TEMPERATURE: –40°C to +85°C

TRAVEL: KDS11: Pre-travel 0.180" TYP; Overtravel 0.223"
KDS33: No pre-travel, full travel 0.403"

DIELECTRIC STRENGTH: 500 Vrms min. @ sea level.

PACKAGING: Bulk packaging.

Materials

HOUSING: Nylon 6/6 (UL 94V-0)

ACTUATOR: Nylon 6/6 (UL 94V-0)

MOVABLE CONTACT: Copper alloy, gold plate over nickel plate.

FIXED CONTACT: Brass, gold plate over nickel plate.

WIRE: UL 1061-24 AWG.

NOTE: Specifications and materials listed above are for switches with standard options. For information on specific and custom switches, consult Customer Service Center.

How To Order

Complete part numbers for KDS Series Switches are shown below.

PART NUMBER	SWITCH FUNCTION POS. 1	SWITCH FUNCTION POS. 2	SCHEMATIC
KDS11	OFF	MOM.	SPST N.O.
KDS33	ON	OFF	SPST N.C.

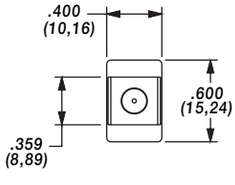

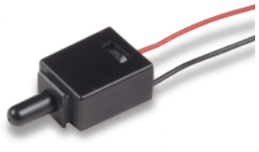

KDS33

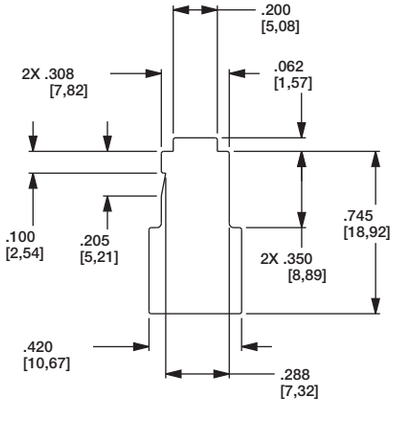

PANEL CUT-OUT THICKNESS 1,02

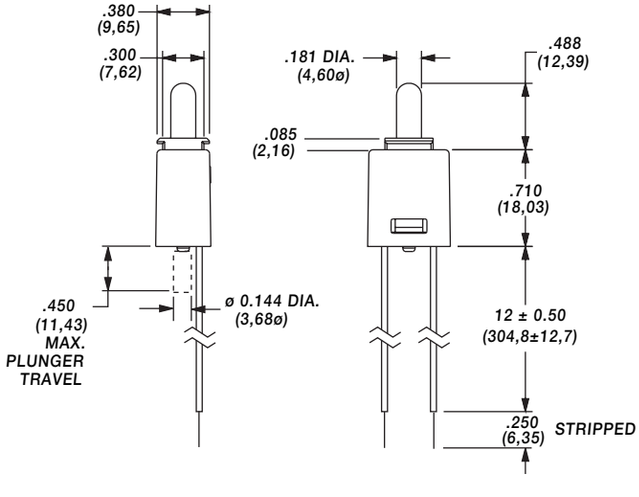

Dimensions are shown: mm
Specifications and dimensions subject to change

Features/Benefits

- ***Reliable contact design***
- ***Available with pretravel and overtravel***
- ***RoHS compliant***

Typical Applications

- ***Alarm systems***
- ***Computers***
- ***Detector switch application***

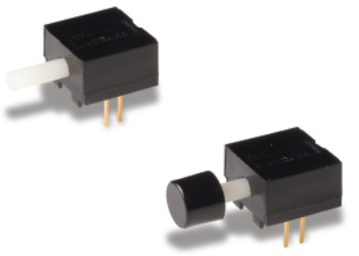

Models Available

Specifications

CONTACT RATING: Q contact material:
0.25 AMPS @ 125 V AC or DC (UL). See page F-29 for additional ratings.

ELECTRICAL LIFE: 10,000 actuations min. at full load.

CONTACT RESISTANCE: Below 30 mΩ typ. initial @ 2-4 V DC, 100 mA, for both silver and gold plated contacts.

INSULATION RESISTANCE: $10^9\Omega$ min.

DIELECTRIC STRENGTH: 1,000 Vrms min. @ sea level.

OPERATING TEMPERATURE: –30°C to 85°C.

CAP INSTALLATION FORCE: 10 lbs. max. permissible.

NOTE: Any models supplied with Q or B contact material are RoHS compliant.

NOTE: Specifications and materials listed above are for switches with standard options. For information on specific and custom switches, consult Customer Service Center.

Materials

HOUSING & BUSHING: 6/6 nylon (UL94V-2), black.

ACTUATOR: 6/6 nylon (UL 94V-2), natural.

MOVABLE CONTACT: B contact material: Bronze or copper, with gold plate over nickel plate. See page F-39 for additional contact materials.

STATIONARY CONTACTS & TERMINALS: B contact material: Copper, with gold plate over nickel plate. See page F-29 for additional contact materials.

RETURN SPRING: Music wire, phosphor coated.

MOUNTING NUT: Brass, nickel plated.

TERMINAL SEAL: Epoxy.

Build-A-Switch

To order, simply select desired option from each category and place in the appropriate box. Available options are shown and described on pages E-28 and E-29. For additional options not shown in catalog, consult Customer Service Center.

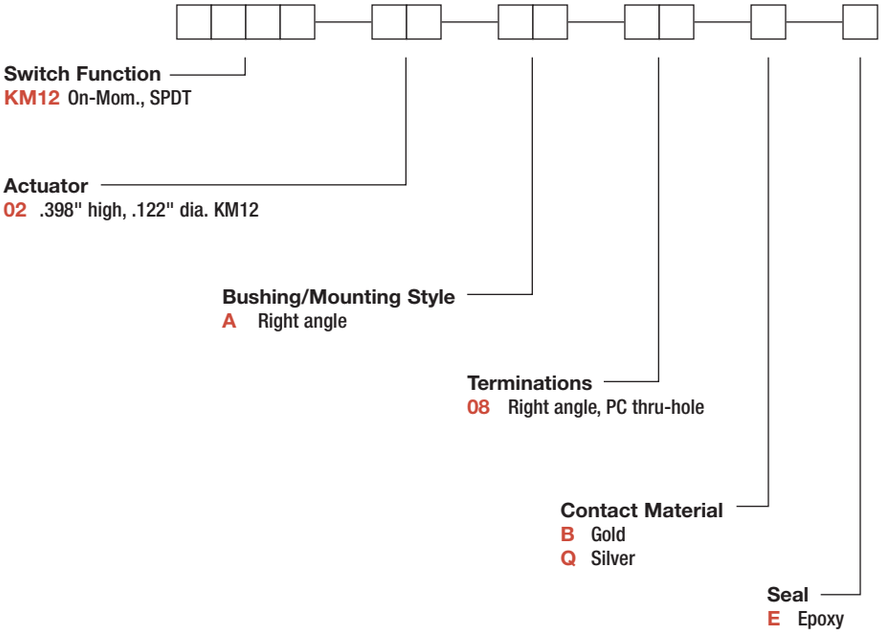

KM Series
Subminiature Detect Switches

SWITCH FUNCTION

NO. POLES	MODEL NO.	SWITCH FUNCTION POS. 1	SWITCH FUNCTION POS. 2	CONNECTED TERMINALS POS. 1	CONNECTED TERMINALS POS. 2	SCHEMATIC
SP	KM12	ON	MOM.	2-1	4-3	SPDT

SPDT

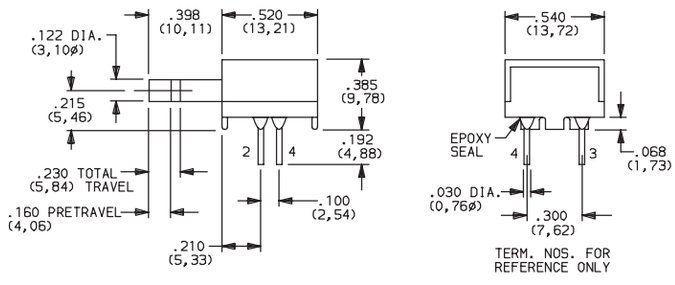

Part number shown: KM1202A08BE

ACTUATOR

02 .398" HIGH, .122" DIA.

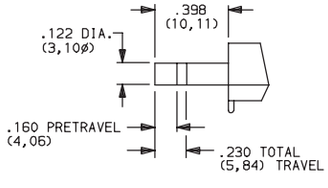

NOTE: Caps available for plunger options, see page E-29.

BUSHING/ MOUNTING STYLE

A RIGHT ANGLE

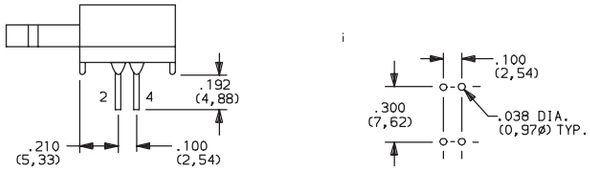

TERMINATIONS

08 RIGHT ANGLE, PC THRU-HOLE

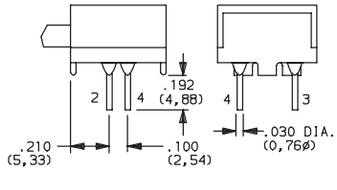

Third Angle Projection

Dimensions are shown: mm
Specifications and dimensions subject to change

CONTACT MATERIAL

OPTION CODE	RoHS COMPLIANT *	RoHS COMPATIBLE *	CONTACT AND TERMINAL MATERIAL	RATINGS	
B	YES	YES	GOLD [1]	LOW LEVEL/DRY CIRCUIT	0.4 VA MAX. @ 20 V AC OR DC MAX.
Q	YES	YES	SILVER [2]	POWER	0.25 AMPS @ 125 V AC OR DC (KM11, KM12) (UL) 1 AMP @ 125 V AC OR 28 V DC (KM33).

* Note: See Technical Data section of this catalog for RoHS compliant and compatible definitions and specifications.

[1] STATIONARY CONTACTS & TERMINALS: Copper, with gold plate over nickel plate.
MOVABLE CONTACT: Phosphor bronze or beryllium copper, with gold plate over nickel plate.

[2] STATIONARY CONTACTS & TERMINALS: Copper, silver plated (standard with all termination options).
MOVABLE CONTACT: Phosphor bronze or beryllium copper, silver plated.

[3] STATIONARY CONTACTS & TERMINALS: Copper, with gold plate over nickel plate over silver plate.
MOVABLE CONTACT: Phosphor bronze or beryllium copper, with gold plate over nickel plate over silver plate.

NOTE: Any models supplied with Q or B contact material are RoHS compliant.

KM12 models ® when ordered with 'Q' contact material.

SEAL

AVAILABLE HARDWARE

Third Angle Projection

Dimensions are shown: mm
Specifications and dimensions subject to change

GT Series
Sealed Ultraminiature Toggle Switches

Features/Benefits

- ***Sealed against solder and cleaning process contaminants***
- ***Ultraminiature size, smallest footprint available***
- ***Thru-hole and surface mount models***
- ***High temperature materials (UL 94V-0)***
- ***RoHS compliant and compatible***

Typical Applications

- ***Hand-held telecommunications***
- ***Small instrumentation***

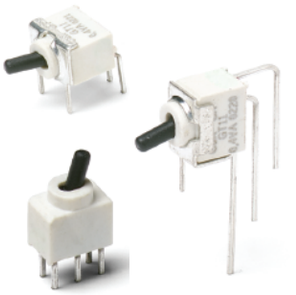

Specifications

CONTACT RATING: 0.4 VA max. @ 20 V AC or DC max.

MECHANICAL & ELECTRICAL LIFE: 40,000 make-and-break cycles at full load.

CONTACT RESISTANCE: Below 50 m Ω typ. initial @ 2-4 V DC, 100 mA.

INSULATION RESISTANCE: 10^9 Ω min.

DIELECTRIC STRENGTH: 500 Vrms min. @ sea level.

OPERATING TEMPERATURE: –30°C to 85°C.

SOLDERABILITY: Per MIL-STD-202F method 208D, or EIA RS-186E method 9 (1 hour steam aging).

PACKAGING: Surface mount switches shipped in anti-static tape and reel packaging per EIA 481-3, see page F-47 for drawings and reel information. Tape and cover strip are conductive for use near statically sensitive components, consult Customer Service Center.

Materials

HOUSING AND BASE: Glass filled nylon 4/6, flame retardant, heat stabilized (UL 94V-0).

ACTUATOR: Glass filled nylon 4/6, flame retardant, heat stabilized (UL 94V-0), with standard internal o-ring seal.

SWITCH SUPPORT: Brass, tin plated.

MOVABLE CONTACTS: Copper alloy, with gold plate over nickel plate.

STATIONARY CONTACTS: Copper alloy, with gold plate over nickel plate.

TERMINALS: Gold.

TERMINAL SEAL: Epoxy. All terminals insert molded.

NOTE: Specifications and materials listed above are for switches with standard options. For information on specific and custom switches, consult Customer Service Center.

How To Order

Complete part numbers for GT Series Sealed Ultraminiature Toggle Switches are shown on pages F–43 thru F–47.

GT11MCBE
SPDT

PART NUMBER	SWITCH FUNCTION POS.1	POS. 2	POS. 3
GT11MCBE	ON	NONE	ON
GT13MCBE	ON	OFF	ON
Conn. Terms.	2-3	OPEN	2-1
Schematic	1 ● ● 2 (COMM) ● 3		
SPDT	Note: Pins 4 and 6 not connected		
GT12MCBE	OFF	NONE	ON
Conn. Terms.	OPEN	N/A	3-1
Schematic	1 ● ● 3		
SPST	Note: Pins 4 and 6 not connected		

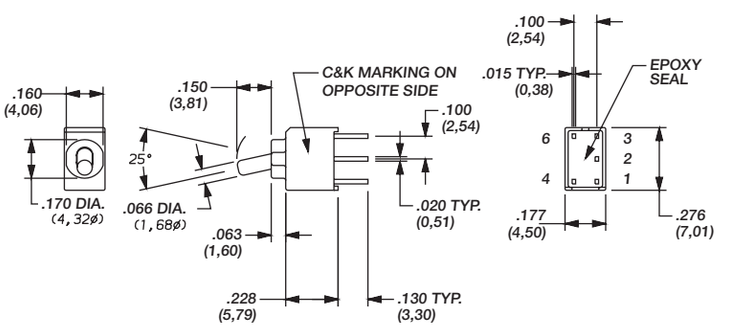

ACTUATOR SHOWN IN POS. 1

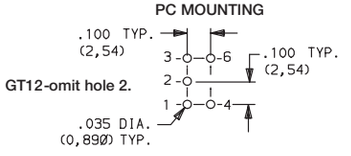

TERMINAL NOS. FOR REFERENCE ONLY

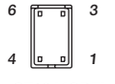

GT12 MODEL
TERMINALS 1,3,4 & 6 ONLY

F
Toggle

Dimensions are shown: Inches (mm)
Specifications and dimensions subject to change

GT Series
Sealed Ultraminiature Toggle Switches

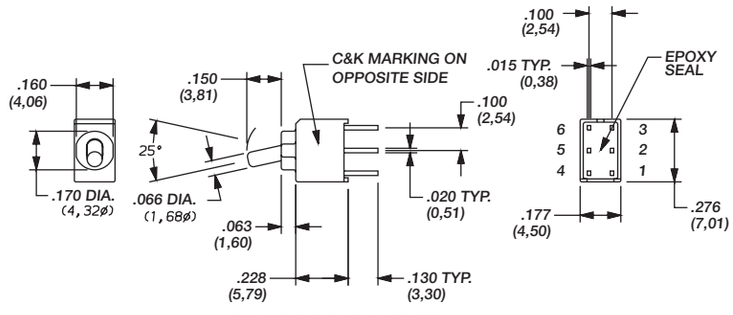

ACTUATOR SHOWN IN POS. 1

PC MOUNTING

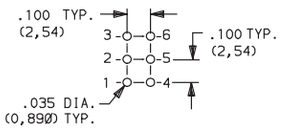

GT22-omit holes 2 & 5.

TERMINAL NOS. FOR REFERENCE ONLY

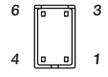

GT22 MODEL
TERMINALS 1,3,4 & 6 ONLY

PART NUMBER	SWITCH FUNCTION POS.1	POS. 2	POS. 3
GT21MCBE	ON	NONE	ON
GT23MCBE	ON	OFF	ON
Conn. Terms.	2-3, 5-6	OPEN	2-1, 5-4
Schematic DPDT	2 (COMM) 5; 1 3; 4 6		
GT22MCBE	OFF	NONE	ON
Conn. Terms.	OPEN	N/A	3-1
Schematic DPST	3 6; 1 4		

GT21MCBE
DPDT

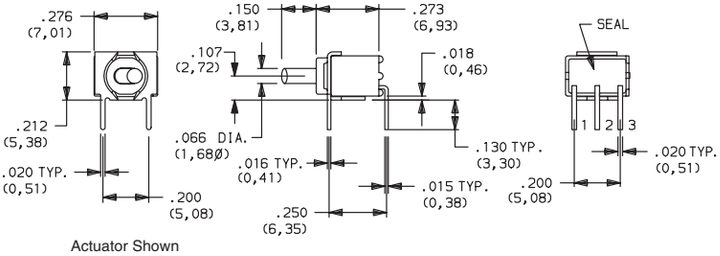

Actuator Shown
In Pos. 1

PC MOUNTING

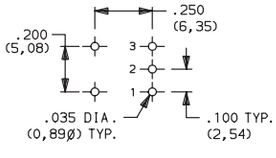

GT12-omit hole 2.

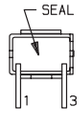

GT12 Models

PART NUMBER	SWITCH FUNCTION POS.1	POS. 2	POS. 3
GT11MABE	ON	NONE	ON
GT13MABE	ON	OFF	ON
Conn. Terms.	2-3	OPEN	2-1
Schematic SPDT	2 (COMM); 1 3		
GT12MABE	OFF	NONE	ON
Conn. Terms.	OPEN	N/A	3-1
Schematic SPST	1 3		

GT11MABE
Horizontal
Actuation
SPDT

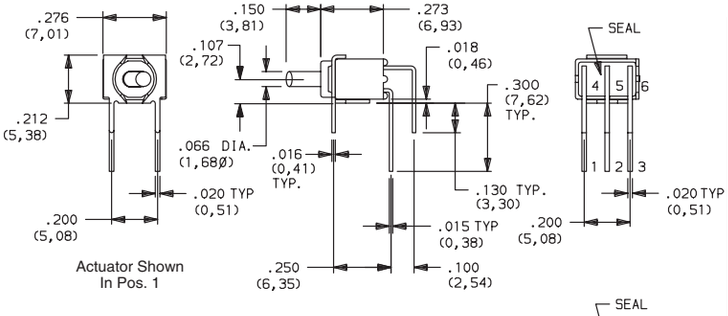

Actuator Shown
In Pos. 1

PC MOUNTING

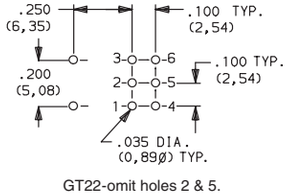

GT22-omit holes 2 & 5.

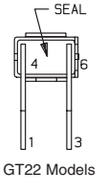

GT22 Models

PART NUMBER	SWITCH FUNCTION POS.1	POS. 2	POS. 3
GT21MABE	ON	NONE	ON
GT23MABE	ON	OFF	ON
Conn. Terms.	2-3, 5-6	OPEN	2-1, 5-4
Schematic DPDT	2 (COMM) 5; 1 3; 4 6		
GT22MABE	OFF	NONE	ON
Conn. Terms.	OPEN	N/A	3-1, 6-4
Schematic DPST	3 6; 1 4		

GT21MABE
Horizontal
Actuation
DPDT

Third Angle Projection

Dimensions are shown: Inches (mm)
Specifications and dimensions subject to change

GT11MAVBE
Vertical
Actuation
SPDT

PART NUMBER	SWITCH FUNCTION POS.1	POS. 2	POS. 3
GT11MAVBE	ON	NONE	ON
GT13MAVBE	ON	OFF	ON
Conn. Terms.	2-3	OPEN	2-1
Schematic SPDT	2 (COMM), 1, 3		
GT12MAVBE	OFF	NONE	ON
Conn. Terms.	OPEN	N/A	3-1
Schematic SPST	1, 3		

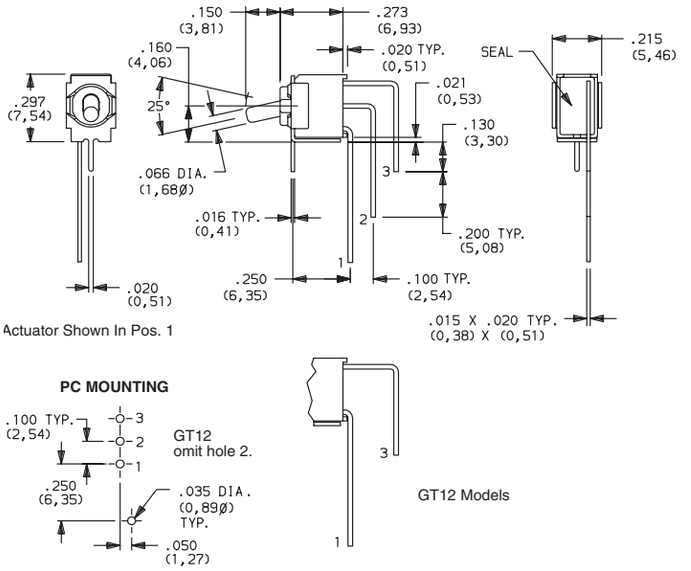

GT21MAVBE
Vertical
Actuation
DPDT

PART NUMBER	SWITCH FUNCTION POS.1	POS. 2	POS. 3
GT21MAVBE	ON	NONE	ON
GT23MAVBE	ON	OFF	ON
Conn. Terms.	2-3, 5-6	OPEN	2-1, 5-4
Schematic DPDT	2 (COMM), 5, 1, 3, 4, 6		
GT22MAVBE	OFF	NONE	ON
Conn. Terms.	OPEN	N/A	3-1, 6-4
Schematic DPST	3, 6, 1, 4		

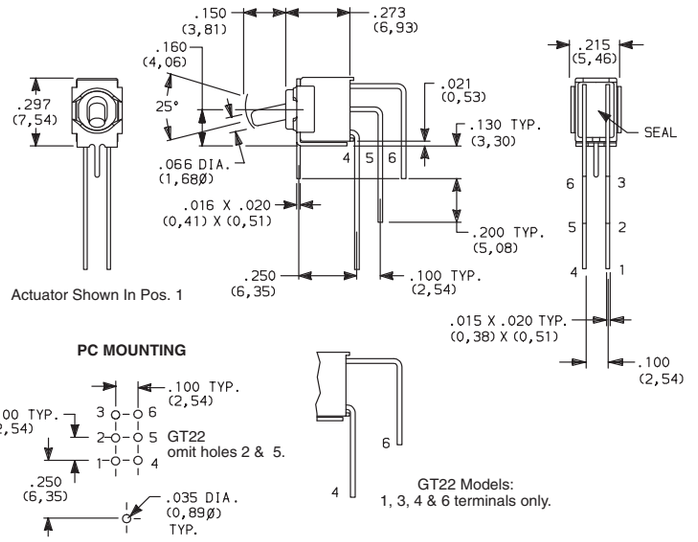

GT11MV3BE
SPDT

PART NUMBER	SWITCH FUNCTION POS.1	POS. 2	POS. 3
GT11MV3BE	ON	NONE	ON
GT13MV3BE	ON	OFF	ON
Conn. Terms.	2-3	OPEN	2-1
Schematic SPDT	2 (COMM), 1, 3	Note: Pins 4 and 6 not connected	
GT12MV3BE	OFF	NONE	ON
Conn. Terms.	OPEN	N/A	3-1
Schematic SPST	1, 3	Note: Pins 4 and 6 not connected	

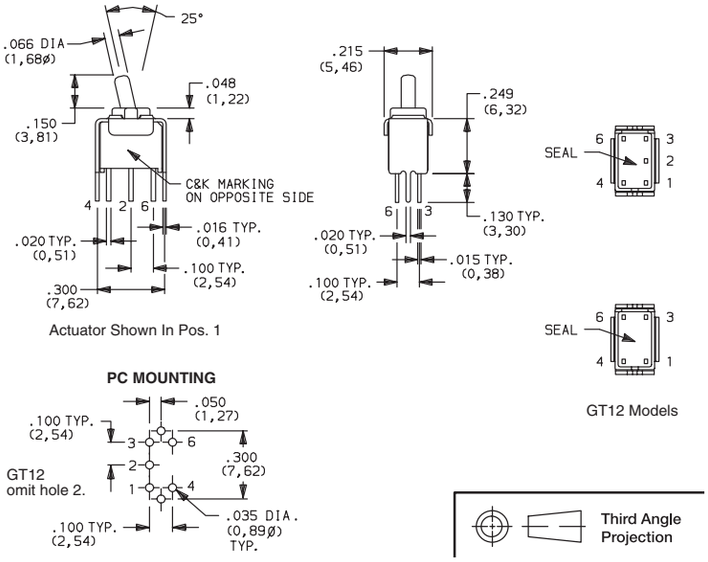

Third Angle Projection

Dimensions are shown: Inches (mm)
Specifications and dimensions subject to change

GT Series
Sealed Ultraminiature Toggle Switches

GT21MV3BE
DPDT

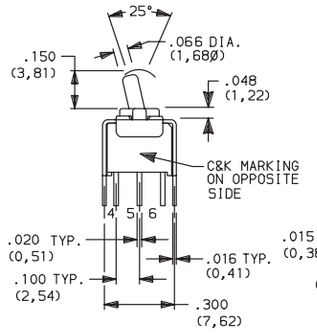

Actuator Shown
In Pos. 1

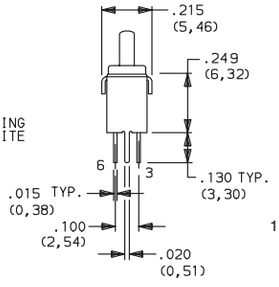

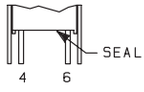

GT22 Models:
1, 3, 4 & 6 terminals only.

PC MOUNTING

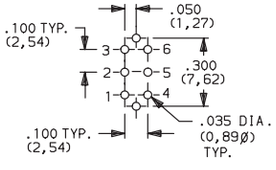

PART NUMBER	SWITCH FUNCTION POS.1	POS. 2	POS. 3
GT21MV3BE	ON	NONE	ON
GT23MV3BE	ON	OFF	ON
Conn. Terms.	2-3, 5-6	OPEN	2-1, 5-4
Schematic DPDT	2 (COMM) 5; 1 3; 4 6		
GT22MV3BE	OFF	NONE	ON
Conn. Terms.	OPEN	N/A	3-1, 6-4
Schematic DPST	3 6; 1 4		

GT11MSABE
Horizontal
Actuation
SPDT

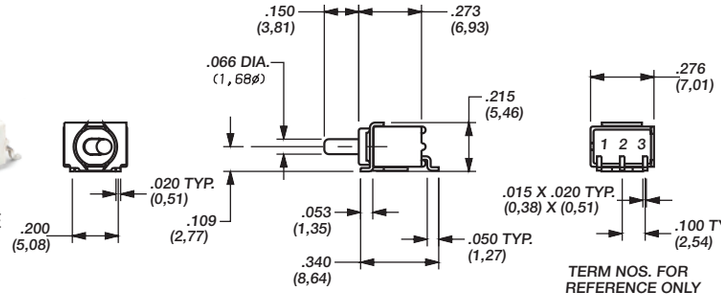

ACTUATOR SHOWN IN POS.1

TERM NOS. FOR REFERENCE ONLY

PC MOUNTING

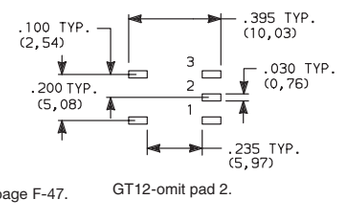

GT12 MODEL TERMS. 1 & 3 ONLY

Standard with tape & reel packaging, see page F-47.

GT12-omit pad 2.

PART NUMBER	SWITCH FUNCTION POS.1	POS. 2	POS. 3
GT11MSABETR	ON	NONE	ON
GT13MSABETR	ON	OFF	ON
Conn. Terms.	2-3	OPEN	2-1
Schematic SPDT	2 (COMM); 1 3		
GT12MSABETR	OFF	NONE	ON
Conn. Terms.	OPEN	N/A	3-1
Schematic SPST	1 3		

GT11MSCBE
SPDT

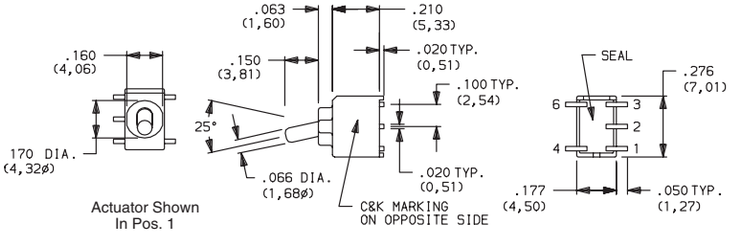

Actuator Shown
In Pos. 1

PC MOUNTING

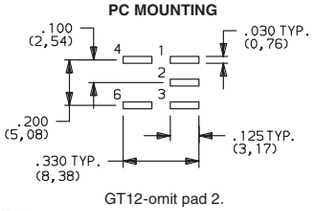

GT12-omit pad 2.

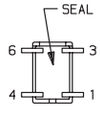

GT12 Models

PART NUMBER	SWITCH FUNCTION POS.1	POS. 2	POS. 3
GT11MSCBETR	ON	NONE	ON
GT13MSCBETR	ON	OFF	ON
Conn. Terms.	2-3	OPEN	2-1
Schematic SPDT	2 (COMM); 1 3	Note: Pins 4 and 6 not connected	
GT12MSCBETR	OFF	NONE	ON
Conn. Terms.	OPEN	N/A	3-1
Schematic SPST	1 3	Note: Pins 4 and 6 not connected	

Standard with tape & reel packaging, see page F-47.

Third Angle
Projection

Dimensions are shown: Inches (mm)
Specifications and dimensions subject to change

GT21MSCBE
DPDT

PART NUMBER	SWITCH FUNCTION POS.1	POS. 2	POS. 3
GT21MSCBETR	ON	NONE	ON
GT23MSCBETR	ON	OFF	ON
Conn. Terms.	2-3, 5-6	OPEN	2-1, 5-4
Schematic DPDT	1 ● ●3 ●2 (COMM) 4 ● ●5 ● 6		
GT22MSCBETR	OFF	NONE	ON
Conn. Terms.	OPEN	N/A	3-1, 6-4
Schematic DPST	1 ● 3 ● ● 4 ● 6		

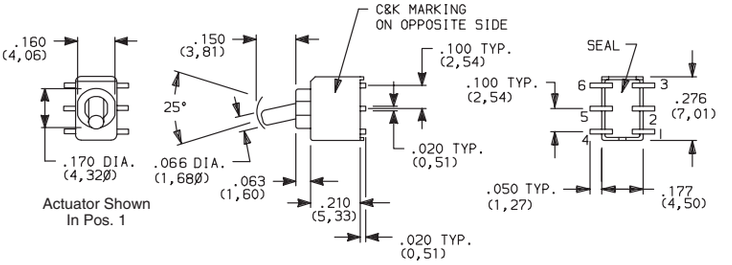

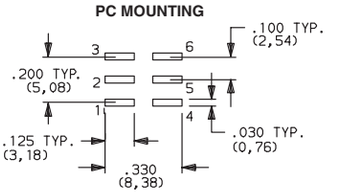

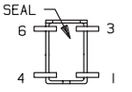

GT22 Models

GT22-omit pads 2 & 5.

Standard with tape & reel packaging

TAPE & REEL

For part numbers GT11MSABE, GT12MSABE, GT13MSABE

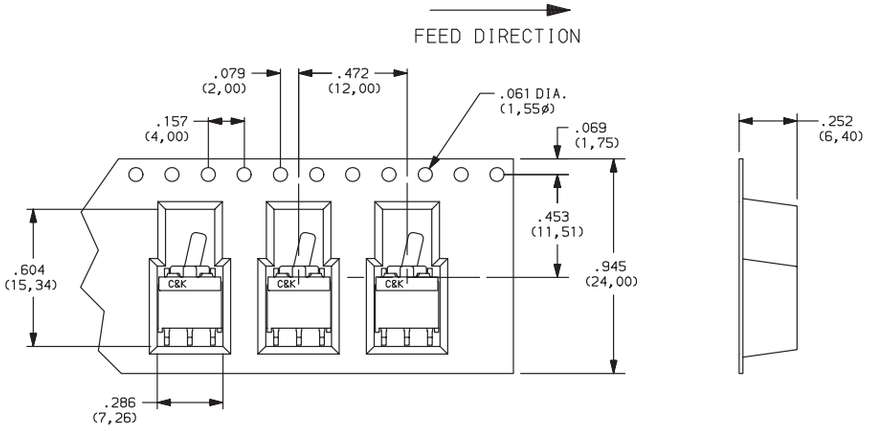

REEL INFORMATION	
OUTSIDE DIAMETER	13.00 (330,0)
PILOT HOLE	.512 (13,0)
QUANTITY PER REEL	600

For part numbers GT11MSCBE, GT12MSCBE, GT13MSCBE, GT21MSCBE, GT22MSCBE, GT23MSCBE,

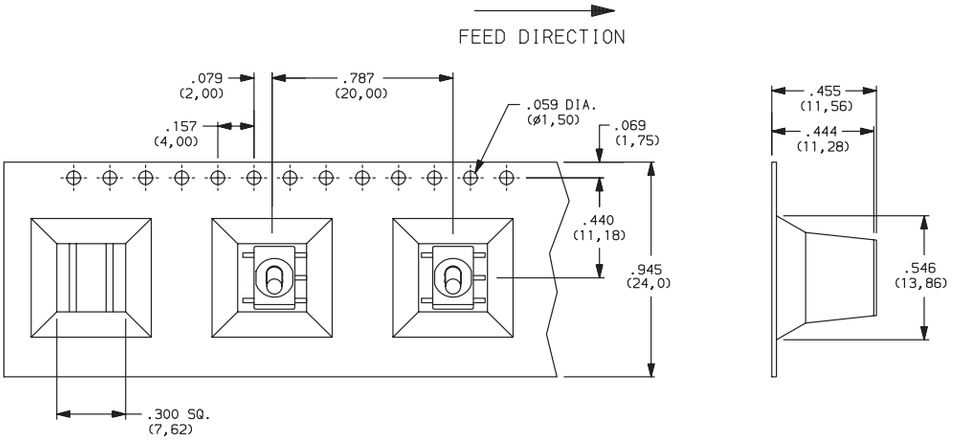

REEL INFORMATION	
OUTSIDE DIAMETER	13.00 (330,0)
PILOT HOLE	.512 (13,0)
QUANTITY PER REEL	200

Third Angle Projection

Dimensions are shown: Inches (mm)
Specifications and dimensions subject to change

9000 Series
Power Toggle Switches

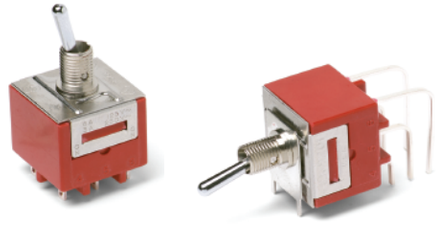

Features/Benefits

- ***Power ratings up to 10 AMPS***
- ***Double pole models***
- ***Locking lever options available***
- ***Wide variety of actuator styles***
- ***RoHS compliant and compatible***

Typical Applications

- ***Shut-off switch***
- ***Small equipment***

UL 61058-1

Specifications

CONTACT RATING:

9201 Model

GP (general purpose)
6 AMPS 125 VAC 50/60 Hz T85 10,000 cycles (10E3)
3 AMPS 250 VAC 50/60 Hz T85 10,000 cycles
R (resistive)
6 AMPS 30 VDC T85 10,000 cycles

9221 Model:

GP (general purpose)
10 AMPS 125 VAC 50/60 Hz T85 10,000 cycles
5 AMPS 250 VAC 50/60 Hz T85 10,000 cycles
R (resistive)
10 AMPS 30 VDC T85 10,000 cycles

ELECTRICAL LIFE: 25,000 make-and-break cycles at full load.

CONTACT RESISTANCE: Below 10 m Ω typ. initial @ 2-4 V DC, 100 mA.

INSULATION RESISTANCE: 10^9 Ω min.

DIELECTRIC STRENGTH: 2,500 Vrms min. @ sea level.

OPERATING TEMPERATURE: –30°C to 85°C.

SOLDERABILITY: Per MIL-STD-202F method 208D, or EIA RS-186E method 9 (1 hour steam aging).

Materials

CASE: Diallyl phthalate (DAP) (UL 94V-0).

ACTUATOR: Brass, chrome plated.

BUSHING: Brass or zinc, nickel plated.

HOUSING: Stainless steel.

SWITCH SUPPORT: Brass or steel, matte-tin plated.

END CONTACTS: 9201 Model: Coin silver, silver plated.
9221 Model: Silver cadmium oxide.

CENTER CONTACTS: Copper alloy, silver plated

ALL TERMINALS: 9201 Model: Copper alloy, silver plated.
9221 Model: Copper alloy, matte-tin plated.

TERMINAL SEAL: Epoxy.

HARDWARE: Nut & Locking ring: Brass, nickel plated.
Lockwasher: Steel, nickel plated.

NOTE: Any models supplied with Q contact material are RoHS compliant and compatible.

NOTE: Specifications and materials listed above are for switches with standard options. For information on specific and custom switches, consult Customer Service Center.

Build-A-Switch

To order, simply select desired option from each category and place in the appropriate box. Available options are shown and described on pages F-49 thru F-52. For additional options not shown in catalog, consult Customer Service Center.

Switch Function
9201 DPDT, On-On, 6 Amps
9221 DPDT, On-On, 10 Amps

Actuator
S Antirotation, .410" high
K Locking lever, .650" high
K1 Locking lever, .680" high
L43 Lever handle with cap
P3 Flatted, anti-rotation, .450" high
T .687" high, 15/32 bushing
T1 .460" high, 15/32 bushing

Bushing
H3 .296" high, keyway
CW Splashproof
H .296" high, flat

Terminations
Z Solder lug
Z4 Quick connect (9221 only)
AV2 Vert. right angle, PC thru-hole (9201 only)
C PC Thru-hole

Contact Material
Q Silver

Seal
E Epoxy
D No epoxy

Actuator Color/Finish
NONE Bright chrome
2 Black

Bushing Finish
NONE Nickel
2 Black

KXX Actuator Color/Finish
NONE Natural aluminum
2 Black anodized aluminum

Dimensions are shown: Inches (mm)
Specifications and dimensions subject to change

SWITCH FUNCTION

NO. POLES	MODEL NO.	RATING*	SWITCH FUNCTION POS. 1 (KEYWAY)	SWITCH FUNCTION POS. 2 (KEYWAY)	CONNECTED TERMINALS POS. 1 (KEYWAY)	CONNECTED TERMINALS POS. 2 (KEYWAY)	SCHEMATIC
DP	9201	6 AMPS	ON	ON	2-3,5-6	2-1,5-4	DPDT
	9221	10 AMPS	ON	ON			

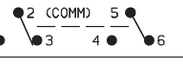

DPDT

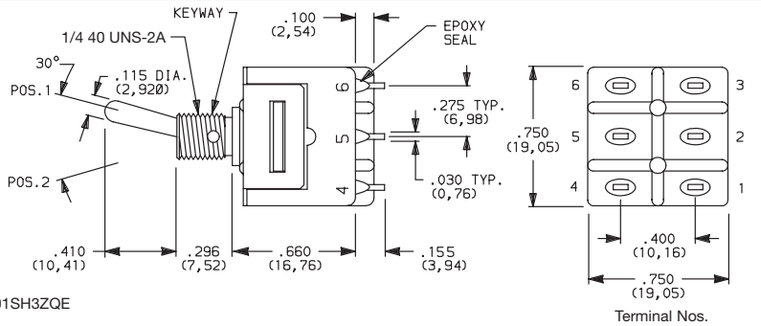

Part number shown: 9201SH3ZQE

* See CONTACT MATERIAL, page F-52, for complete ratings.

All 9000 Series models meet international dimensional and electrical requirements.

9221 model must be ordered with Z4 terminations and D seal option.

ACTUATOR

ACTUATOR FINISH

ACTUATOR

S ANTIROTATION, .410" HIGH

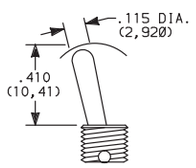

P3 FLATTED, ANTIROTATION, .450" HIGH

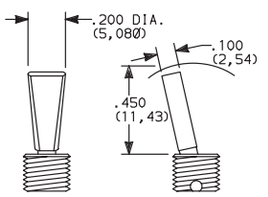

OPTION CODE	ACTUATOR FINISH
NONE	NATURAL ALUMINUM—With Nickel Plated Bushing
2	BLACK

NOTE: Black hardware is supplied when either black actuators or bushings are specified. All hardware is available separately, see Section N.

Antirotation is standard on all actuators, provides 'anti-push-in' feature on actuator.

Dress nut part number: 709901201 supplied standard with P3 actuator.

T .687" HIGH, 15/32 BUSHING

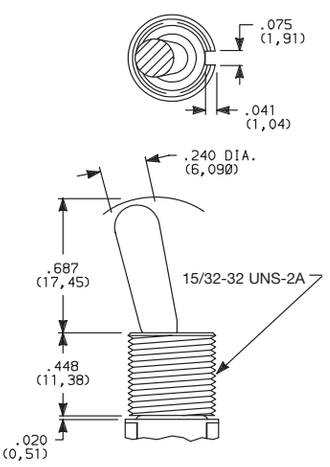

T1 .460" HIGH, 15/32 BUSHING

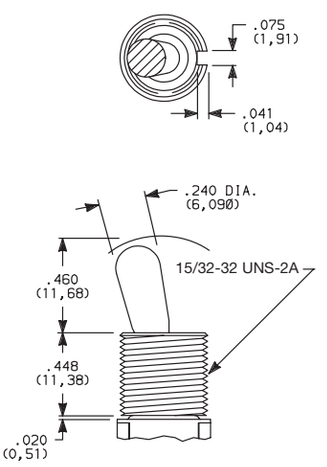

OPTION CODE	ACTUATOR FINISH
NONE	BRIGHT CHROME—With Nickel Plated Bushing
2	BLACK

NOTE: Bushing option code not required for T & T1 actuators unless CW splashproof bushing ordered.

Black hardware is supplied when either black actuators or bushings are specified. All hardware is available separately, see Section N.

Antirotation is standard on all actuators except T & T1, provides 'anti-push-in' feature on actuator.

Third Angle Projection

Dimensions are shown: Inches (mm)
Specifications and dimensions subject to change

9000 Series
Power Toggle Switches

ACTUATOR

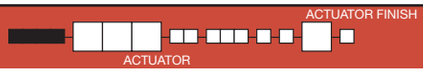

K LOCKING LEVER, .650" HIGH, THREADED

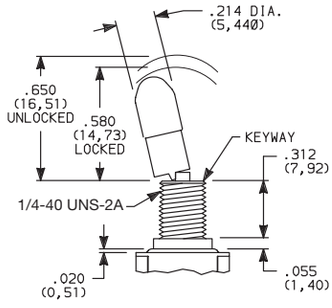

K1 LOCKING LEVER, .680" HIGH, THREADED

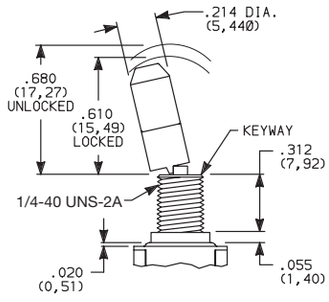

Locking Positions

2 Position Lock

NOTE: To prevent accidental actuation, toggles must be lifted before being actuated. When released, toggles again lock in place. Bushing option code not required. Overtightening mounting nut may cause actuator to bind.

OPTION CODE	ACTUATOR CAP FINISH
NONE	NATURAL ALUMINUM–With Nickle Plated Bushing
2	BLACK ANODIZED ALUMINUM

L40 LEVER HANDLE WITHOUT CAP

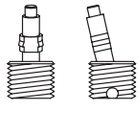

No color choice required.

L43 PLASTIC LEVER HANDLE WITH ANTIROTATION AND CAP, P/N 4812

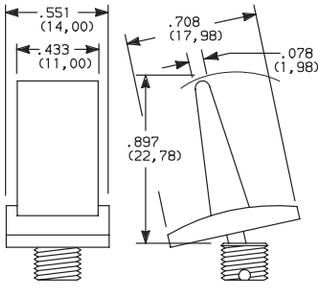

OPTION CODE	ACTUATOR CAP COLOR
2	BLACK
NONE	No Actuator Color (L40 option)

Other colors available, consult Customer Service Center.

Finish: Matte

NOTE: Lever handle actuator L43 supplied, but not installed. For interchangeability, order L40 actuator option and order lever handles separately, see page F-52. Antirotation is standard on all actuators, provides 'anti-push-in' feature.

BUSHING

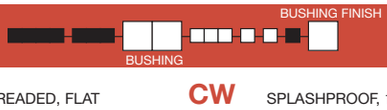

H3 .296" HIGH, THREADED, KEYWAY

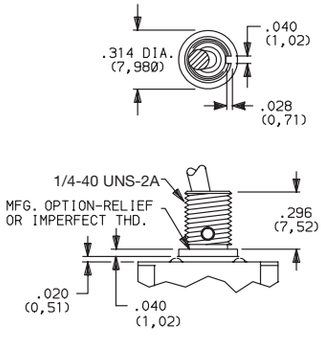

Will withstand 12 in./lbs. of torque with no distortion.

H .296" HIGH, THREADED, FLAT

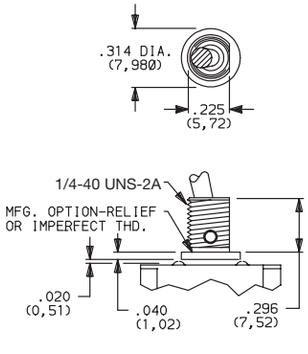

CW SPLASHPROOF, 15/32 BUSHING

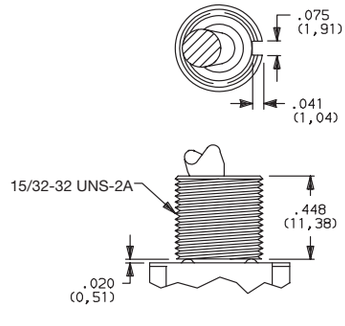

For T & T1 actuators only.

OPTION CODE	BUSHING FINISH
NONE	NICKEL
2	BLACK

NOTE: Two mounting nuts, locking ring and lockwasher supplied standard with threaded bushings. Black hardware is supplied when either black bushings or actuators are specified. Optional mounting nut and locking ring styles and finishes available, see Section N.

Internal actuator seal standard. External bushing seal available separately from APM Hexseal, part # MFS-60064.

Third Angle Projection

Dimensions are shown: Inches (mm)
Specifications and dimensions subject to change

BUSHING

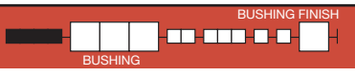

PANEL MOUNTING

1/4-40 UNS-2A

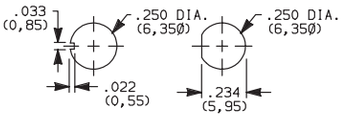

Without locking ring.

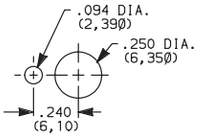

With standard locking ring.

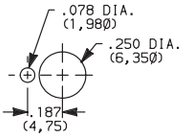

With small locking ring.

15/32-32 UNS-2A

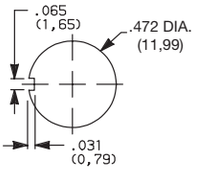

Without locking ring.

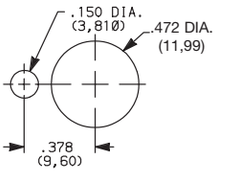

With standard locking ring.

TERMINATIONS

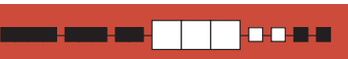

Z SOLDER LUG

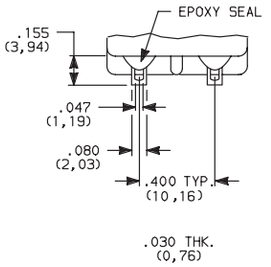

9201 Only

C PC THRU-HOLE

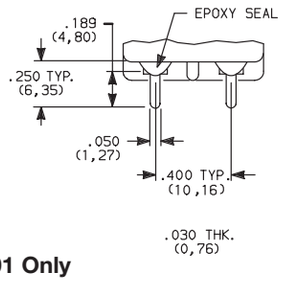

PC MOUNTING

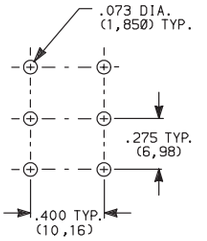

9201 Only

Z4 .187" QUICK CONNECT

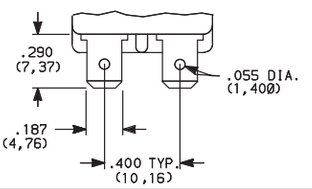

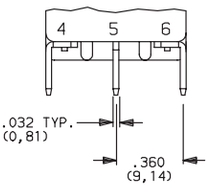

9221 Only

NOTE: Only termination available with 9221 model. Must be ordered with D seal option. Mates with standard .187 Nema female connector.

AV2 VERTICAL RIGHT ANGLE, PC THRU-HOLE

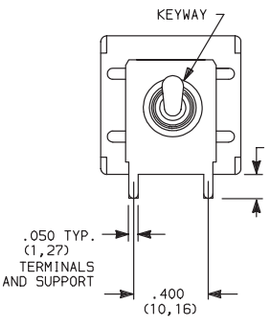

Actuator Shown in Pos. 3

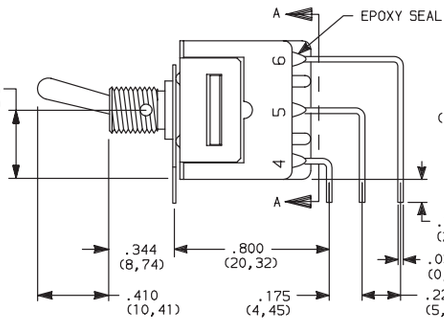

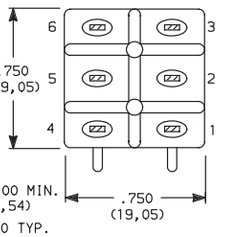

SECTION A-A

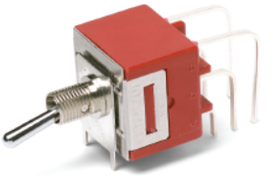

9201SH3AV2QE
Vertical Actuation
DPDT

PC MOUNTING

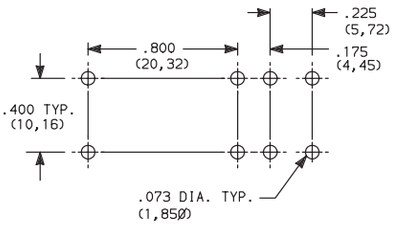

Terminal Nos.
For Reference Only

9201 Only

NOTE: Terminal bend radii and lead-in manufacturing option. Terminal spacing greater than 3mm at all points.

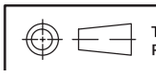

Third Angle Projection

Dimensions are shown: Inches (mm)
Specifications and dimensions subject to change

9000 Series
Power Toggle Switches

CONTACT MATERIAL

OPTION CODE	MODEL	CONTACT MATERIAL	TERMINAL PLATING	RATINGS
Q	9201	SILVER [1,2]	SILVER OR TIN [2,5]	GP (general purpose) 6 AMPS 125 VAC 50/60 Hz T85 10,000 cycles (10E3) 3 AMPS 250 VAC 50/60 Hz T85 10,000 cycles R (resistive) 6 AMPS 30 VDC T85 10,000 cycles
	9221	SILVER CADMIUM OXIDE [3,4,6]	TIN [5]	GP (general purpose) 10 AMPS 125 VAC 50/60 Hz T85 10,000 cycles 5 AMPS 250 VAC 50/60 Hz T85 10,000 cycles R (resistive) 10 AMPS 30 VDC T85 10,000 cycles

* Note: See Technical Data section of this catalog for RoHS compliant and compatible definitions and specifications.

[1] END CONTACTS: Coin silver, silver plated.
[2] CENTER CONTACTS & ALL TERMINALS: Copper alloy, silver plated.
[3] END CONTACTS: Silver cadmium oxide.
[4] CENTER CONTACTS: Copper alloy, silver plated.
[5] Z4 TERMINALS ONLY: Copper alloy, matte-tin plated.
[6] Cadmium in electrical switch contacts is exempt from RoHS.

NOTE: Any models supplied with Q contact material are RoHS compliant.

All 9000 Series models meet international dimensional and electrical requirements.

9221 model must be ordered with Z4 terminations and D seal option.

SEAL

E EPOXY SEAL

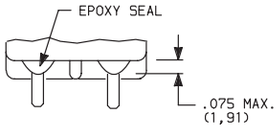

Not available with 9221 model or Z4 terminations.

D NO EPOXY SEAL

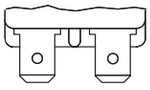

Must be ordered with 9221 model and Z4 termination.

AVAILABLE HARDWARE

Cap
Compatible with S actuator

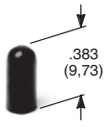

PART NO.

896801000	WHITE
896802000	BLACK
896803000	RED

Material: Polyethylene
Finish: Matte

Cap
Compatible with S actuator

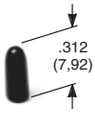

PART NO.

706201000	WHITE
706202000	BLACK
706203000	RED

Material: Vinyl
Finish: Matte

L43 Actuator

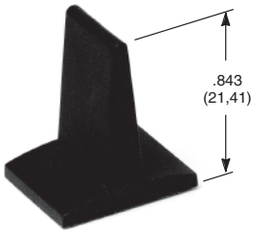

PART NO.

481202000	BLACK
481203000	RED

Material: Nylon
Finish: Matte

NOTE: Additional nuts, locking rings and lockwashers available separately, see Section N.

Other colors available, consult Customer Service Center.

759D02000 Sealing Boot

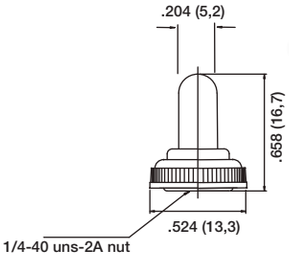

NOTE: For use with S actuator style when combined with H3 and H bushings

703D02000 Sealing Boot

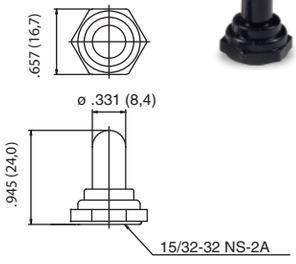

NOTE: For use with T style actuator

704D02000 Sealing Boot

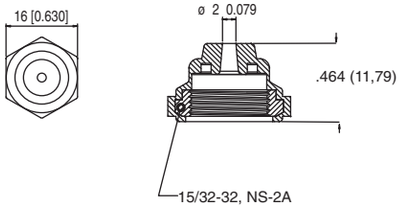

NOTE: For use with T style actuator

Third Angle Projection

Dimensions are shown: Inches (mm)
Specifications and dimensions subject to change

Rockers
Product Selection Guide

Rocker			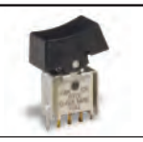			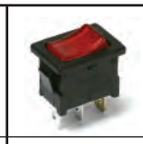	
Series	**7000**	**E**	**ET**	**T**	**9000**	**DA**	**D**
Switch Type	Miniature	Miniature	Subminiature	Subminiature	Power Rocker & Lever Handle	Miniature Power	Miniature Power
Poles/Throws	SPDT, DPDT, 3PDT, 4PDT	SPDT, DPDT, 3PDT	SPST, SPDT, DPDT	SPST, SPDT, DPDT	DPDT	SPST, SPDT	SPST, SPDT DPST, DPDT
Max. Current	5 Amps	7.5 Amps	3 Amps	3 Amps	10 Amps	16 Amps 10 Amps	4 Amps 10 Amps
Washable		•	•				
Illuminated						•	
Panel Mount Options							
Front Mount	•	•		•	•	Snap-in	Snap-in
Rear Mount	•	•		•	•		
PCB Mount Options							
Vertical	•	•	•	•	•	•	•
Right Angle	•	•	•	•	•	•	•
Surface Mount			•				
Page No.	G–3	G–25	G–39	G–45	G–51	G–56	G–60

Rocker					
Series	**DM**	**DM**	**DF**	**CR**	**SW**
Switch Type	Miniature 2 Pole Power	Miniature Illuminated Power	Power	Round	Miniature Power
Poles/Throws	DPST, DPDT	SPST, DPST	SPST, SPDT, DPST	SPST, SPDT	SPST, SPDT, DPST
Max. Current	3 Amps, 10 Amps	3 Amps, 10 Amps	16 Amps	10 Amps, 6 Amps	3 A, 6 A, 6.5 A, 10 A, 16 A
Washable					
Illuminated		•		•	•
Panel Mount Options					
Front Mount	Snap-in	Snap-in	Snap-in	Snap-in	Snap-in
Rear Mount			•		
PCB Mount Options					
Vertical					
Right Angle			•		
Surface Mount					
Page No.	G–65	G–69	G–73	G–77	G–81

Dimensions are shown: Inches (mm)
Specifications and dimensions subject to change

7000 Series
Miniature Rocker & Lever Handle Switches

Features/Benefits

- ***Multi-pole and multi-position***
- ***Wide variety of actuator and termination options***
- ***Epoxy terminal-seal compatible with bottom wash cleaning***
- ***RoHS compliant***

Typical Applications

- ***Telecommunications***
- ***Instrumentation***
- ***Medical equipment***

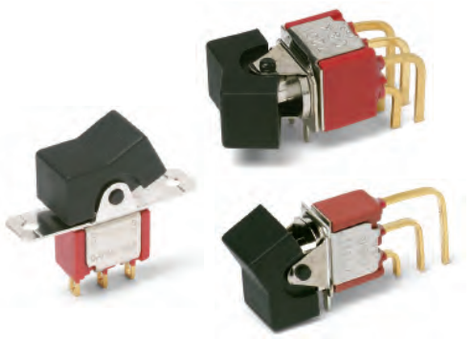

c UL us

Specifications

CONTACT RATING: B contact material: 0.4 VA max. @ 20 V AC or DC max. Q contact material: 5 AMPS @ 120 V AC or 28 V DC; 2 AMPS @ 250 V AC. See page G-20 for additional ratings.

ELECTRICAL LIFE: 7X01 and UX1 models: 100,000 make-and-break cycles at full load. All other models: 40,000 cycles.

CONTACT RESISTANCE: Below 10 m Ω typ. initial @ 2-4 V DC, 100 mA, for both silver and gold plated contacts.

INSULATION RESISTANCE: 10^9 Ω min.

DIELECTRIC STRENGTH: 1000 Vrms min. @ sea level.

OPERATING TEMPERATURE: –30ºC to 85ºC.

SOLDERABILITY: Per MIL-STD-202F method 208D, or EIA RS-186E method 9 (1 hour steam aging).

NOTE: Any models supplied with S, P, R, Q, B or G contact material are RoHS compliant.

NOTE: Specifications and materials listed above are for switches with standard options. For information on specific and custom switches, consult Customer Service Center.

Materials

CASE: Glass filled nylon 6/6, flame retardant, heat stabilized, or diallyl phthalate (DAP) (UL 94V-0).

ACTUATOR: Nylon, black.

FRAME (FRONT MOUNT): Nylon, black.

FRAME (REAR MOUNT): Spring steel, black.

BUSHING: Brass or zinc, nickel plated.

HOUSING: Stainless steel.

SWITCH SUPPORT: Brass or steel, matte-tin plated.

END CONTACTS: B contact material: Copper alloy, with gold plate over nickel plate. Q contact material: Coin silver, silver plated. See page G-20 for additional contact materials.

CENTER CONTACTS & ALL TERMINALS: B contact material: Copper alloy, with gold plate over nickel plate. Q contact material: Copper alloy, silver plated. See page G-20 for additional contact materials.

TERMINAL SEAL: Epoxy. Refer to Soldering and Cleaning in Technical Data Section

HARDWARE: Mounting nuts & screws: Brass. Lockwasher: Stainless steel. Standoff: Nylon standard.

Build-A-Switch

To order, simply select desired option from each category and place in the appropriate box. Available options are shown and described on pages G-4 through G-24 . For additional options not shown in catalog, consult Customer Service Center. All models have epoxy terminal seal and are compatible with all "bottom-wash" PCB cleaning methods.

Switch Function

7101 SP On-None-On
7103 SP On-Off-On
7105 SP Mom.-Off-Mom.
7107 SP On-Off-Mom.
7108 SP On-None-Mom.
7109 SP None-On-Mom.
7201 DP On-None-On
7203 DP On-Off-On
7205 DP Mom.-Off-Mom.
7207 DP On-Off-Mom.
7208 DP On-None-Mom.
7211 DP On-On-On
7213 DP On-On-Mom.
7215 DP Mom.-On-Mom.
7301 3P On-None-On
7303 3P On-Off-On
7401 4P On-None-On
7405 4P Mom.-Off-Mom.
7411 4P On-On-On

Note: UL models available, see pages G-5 and G-6.

Actuator

J1 .531 long rocker
J2 Lever
J3 .906" long rocker
J8 .699" long rocker
J10 1.318" long rocker
J11 Rocker with frame
J15 Rocker, snap-in
J16 Rocker with frame, snap-in
J19 Rocker with frame
J21 Lever with frame
J25 Lever, snap-in
J26 Lever with frame, snap-in
J37 Rocker with frame
J50 Rocker
J51 Rocker with frame
J52 Rocker with frame for LED, snap-in
J60 Lever
J61 Lever with frame, snap-in
J62 Lever with frame for LED, snap-in
J90 Lever
J91 Lever with frame, snap-in

Terminations

A Right angle, PC thru-hole
AV2 Vertical right angle, PC thru-hole
C PC Thru-hole
Z Solder lug
A3 Right angle, snap-in, PC thru-hole
AV3 Vertical right angle, snap-in, PC thru-hole
AW3 Right angle, extended, PC thru-hole
V2 .555" high, V-bracket
V3 .460" high, V-bracket
V4 .630" high, V-bracket
V5 Vertical right angle, PC thru-hole
V6 .460" high, V-bracket
V7 .630" high, V-bracket
V8 .953" high, V-bracket
V9 1.150" high, V-bracket
V31 .460" high, V-bracket, snap-in
V51 Vertical right angle, snap-in
V61 .460" high, V-bracket, snap-in
W .750" long, wire wrap
W3 .425" long, wire wrap
W5 1.305" long,wire wrap
Z3 Quick connect

Contact Material

B Gold
P Gold, matte tin
Q Silver
S Silver, matte-tin
G Gold over silver
R Gold over silver, matte-tin

Seal

E Epoxy
I Epoxy potted base

Actuator Color

2 Black
1 White
3 Red

Frame Color

2 Black
NONE No frame color required
1 White

Metal Frame Color
(J11, J19, J21 & J37 Actuators)

2 Black
1 White

Dimensions are shown: Inches (mm)
Specifications and dimensions subject to change

7000 Series
Miniature Rocker & Lever Handle Switches

SWITCH FUNCTION

NO. POLES	MODEL NO.	UL** MODEL NO.	SWITCH FUNCTION POS. 1	SWITCH FUNCTION POS. 2	SWITCH FUNCTION POS. 3	CONNECTED TERMINALS POS. 1	CONNECTED TERMINALS POS. 2	CONNECTED TERMINALS POS. 3	SCHEMATIC
			C&K marking on opposite side			C&K marking on opposite side			
SP	7101	U11	ON	NONE	ON	2-3	N/A	2-1	SPDT
	7103	U13	ON	OFF	ON		OPEN		
	7105	U15	MOM.	OFF	MOM.				
	7107	U17	ON	OFF	MOM.				
	7108	U18	ON	NONE	MOM.		N/A		
	7109	U19	NONE	ON	MOM.	N/A	2-3	2-1	
DP	7201	U21	ON	NONE	ON	2-3,5-6	N/A	2-1,5-4	DPDT
	7203	U23	ON	OFF	ON		OPEN		
	7205	U25	MOM.	OFF	MOM.				
	7207	U27	ON	OFF	MOM.				
	7208	U28	ON	NONE	MOM.		N/A		
	7211*	U211*	ON	ON	ON		2-3,5-4		
	7213*	U213*	ON	ON	MOM.				
	7215*	U215*	MOM.	ON	MOM.				

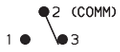

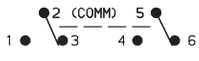

SPDT

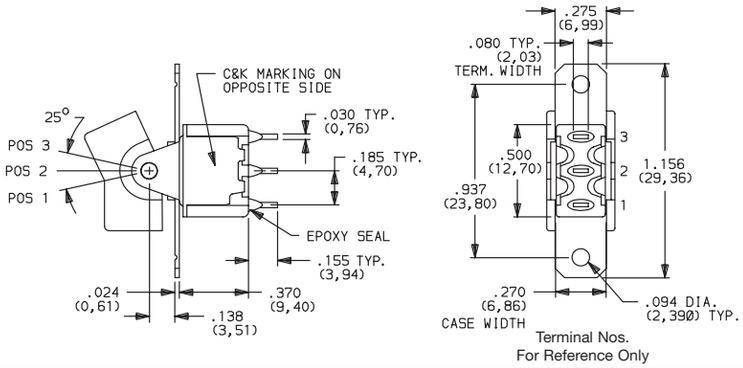

Terminal Nos.
For Reference Only

Part number shown: 7101J1ZQE2

DPDT

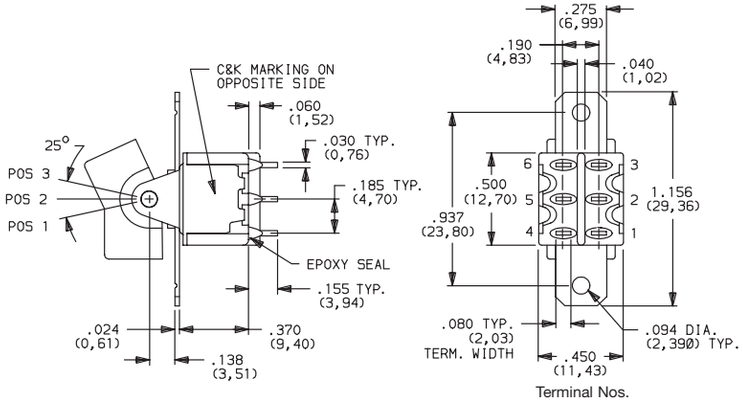

Terminal Nos.
For Reference Only

Part number shown: 7201J1ZQE2

MOM. = Momentary

* Wiring for 3-way switch, see Section N.

** U11 through U413 model nos. c UL us with all options when ordered with G, Q, R or S contact material.

Third Angle Projection

Dimensions are shown: Inches (mm)
Specifications and dimensions subject to change

SWITCH FUNCTION

NO. POLES	MODEL NO.	UL** MODEL NO.	SWITCH FUNCTION POS. 1	SWITCH FUNCTION POS. 2	SWITCH FUNCTION POS. 3	CONNECTED TERMINALS POS. 1	CONNECTED TERMINALS POS. 2	CONNECTED TERMINALS POS. 3	SCHEMATIC
			C&K marking on opposite side			C&K marking on opposite side			
3P	7301	U31	ON	NONE	ON	2-3,5-6,8-9	N/A	2-1,5-4,8-7	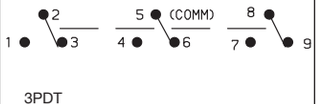
	7303	U33	ON	OFF	ON		OPEN		3PDT

3PDT

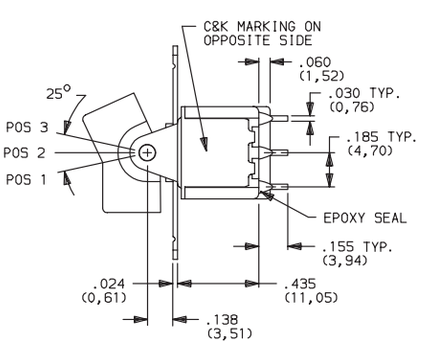

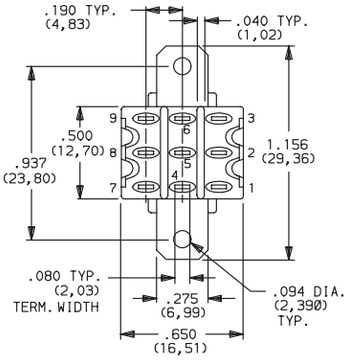

Terminal Nos.
For Reference Only

Part number shown: 7301J1ZQE2

4P	7401	U41	ON	NONE	ON	2-3,5-6,8-9,11-12	N/A	2-1,5-4,8-7,11-10	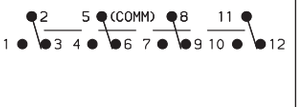
	7405	U45	MOM.	OFF	MOM.		OPEN		
	7411*	U411*	ON	ON	ON		2-3,5-4,8-9,11-10		4PDT

4PDT

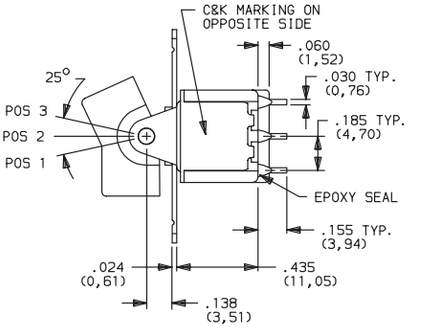

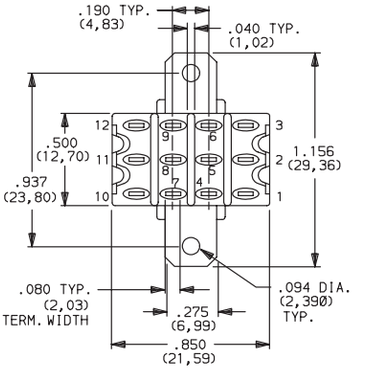

Terminal Nos.
For Reference Only

Part number shown: 7401J1ZQE2

MOM. = Momentary

** U11 through U411 model nos. c UL us with all options when ordered with G, Q, R or S contact material.

* Wiring for 3-way switch: See Technical Data section of this catalog for RoHS compliant and compatible definitions and specifications.

Third Angle Projection

Dimensions are shown: Inches (mm)
Specifications and dimensions subject to change

7000 Series
Miniature Rocker & Lever Handle Switches

ACTUATOR–PANEL REAR MOUNT

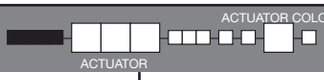

J1 ROCKER

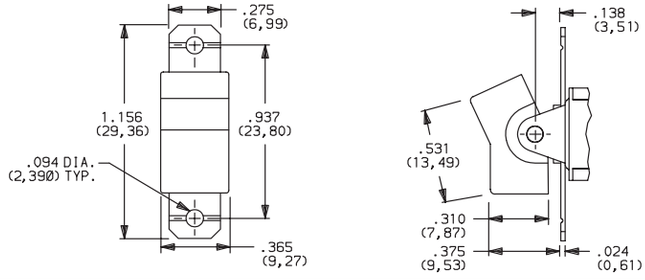

J2 LEVER

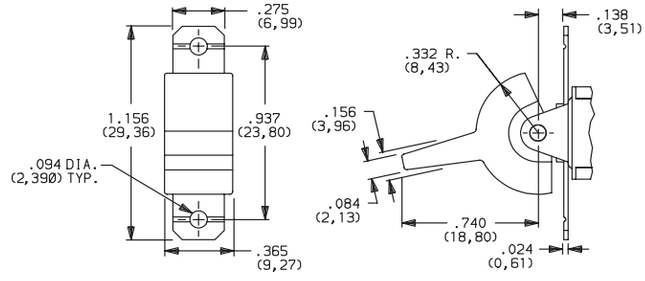

J3 ROCKER

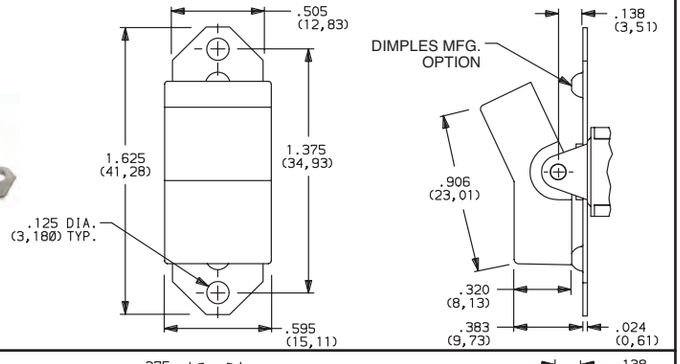

J8 ROCKER

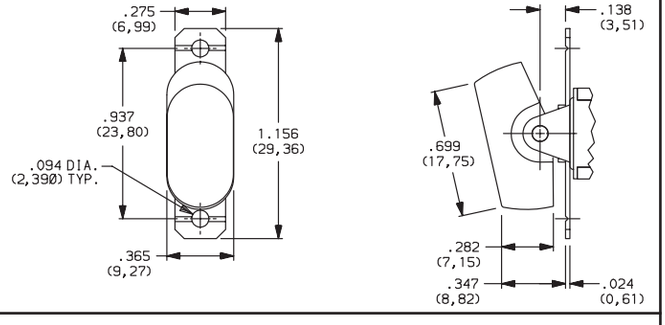

J10 ROCKER

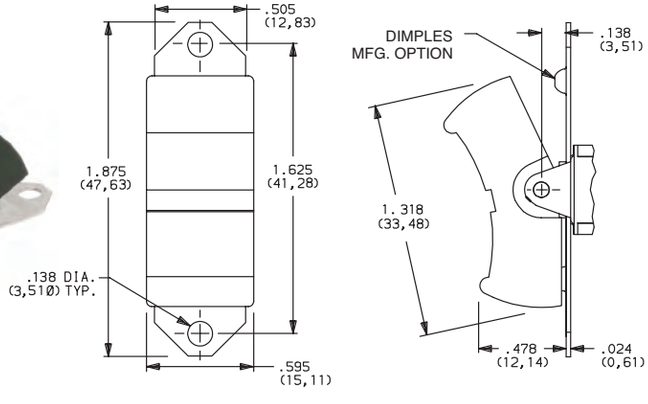

OPTION CODE	ACTUATOR COLOR
2	BLACK
1	WHITE
3	RED

Finish: Matte. Other colors, custom actuator markings and legends available, consult Customer Service Center.

NOTE: Hardware: two each—mounting screws, nuts, lockwashers and standoffs for 1/8 inch thick panel are supplied standard on all switches with panel mounting brackets. Actuators available separately, see page G-21 through G-22. Hardware is available see Technical Data section of this catalog.

J1, J2, J3, J8 & J10 Actuators available with C, W-W5, Z or Z3 terminations.

PANEL MOUNTING

J1 & J2 Actuators

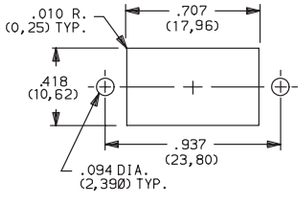

J3 Actuator

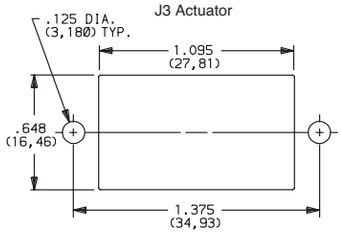

J8 Actuator

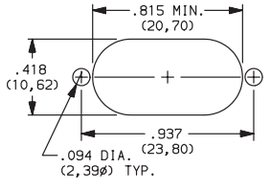

J10 Actuator

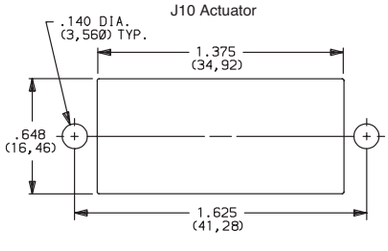

Third Angle Projection

Dimensions are shown: Inches (mm)
Specifications and dimensions subject to change

ACTUATOR–SNAP-IN FRONT MOUNT

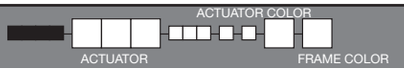

OPTION CODE	ACTUATOR COLOR
2	BLACK
1	WHITE
3	RED

OPTION CODE	FRAME COLOR
2	BLACK
NONE	No Frame Color (J15 or J25options)
1	WHITE

Finish: Matte. Other colors, custom actuator markings and legends available, consult Customer Service Center.

NOTE: Actuators & frames available separately, see pages G-21 through G-22. J15, J16, J25, J26, J50 & J51 Actuators available with 71XX, 72XX, U1XX & U2XX models and C, W-W5, Z and Z3 terminations.

PANEL MOUNTING

J15, J16, J25 & J26 Actuators

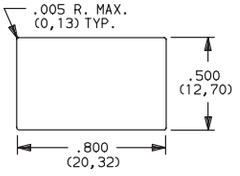

J50 Actuator

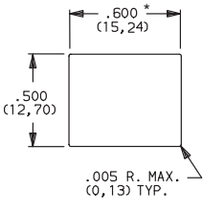

* For J50: Increase this dimension to .620/.625 (15,75/15,88) for .091/.125 (2,31/3,18) thk. panels.

J15 ROCKER, SNAP-IN

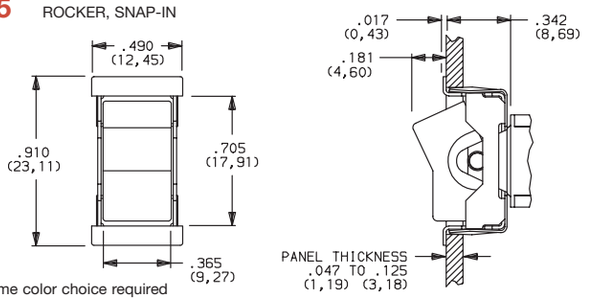

No frame color choice required

J16 ROCKER WITH FRAME, SNAP-IN

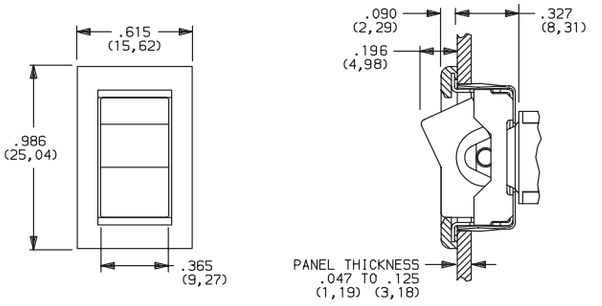

J25 LEVER, SNAP-IN

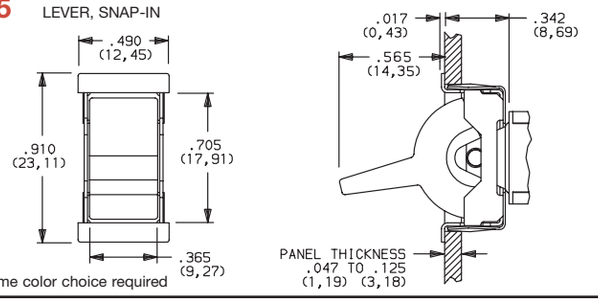

No frame color choice required

J26 LEVER WITH FRAME, SNAP-IN

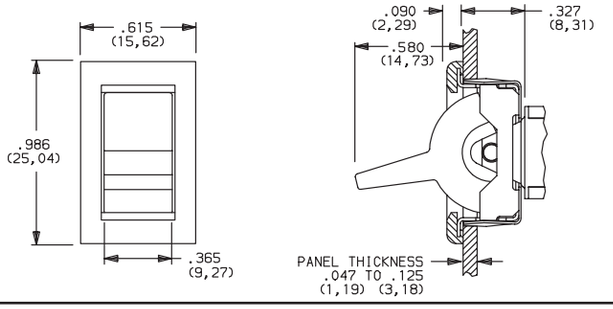

J50 ROCKER, SNAP-IN

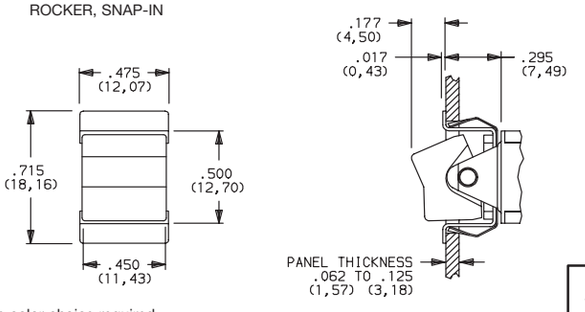

No frame color choice required

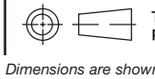

Third Angle Projection

Dimensions are shown: Inches (mm)
Specifications and dimensions subject to change

7000 Series
Miniature Rocker & Lever Handle Switches

ACTUATOR–SNAP-IN FRONT MOUNT

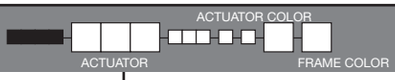

J51 ROCKER WITH FRAME, SNAP-IN

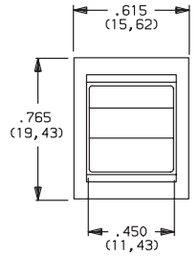

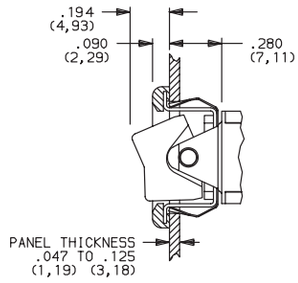

OPTION CODE	ACTUATOR COLOR
2	BLACK
1	WHITE
3	RED

J52 ROCKER WITH FRAME FOR LED, SNAP-IN

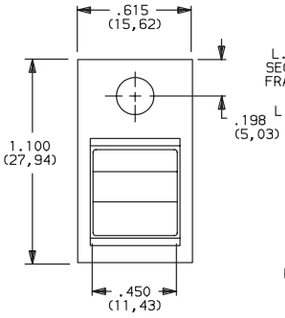

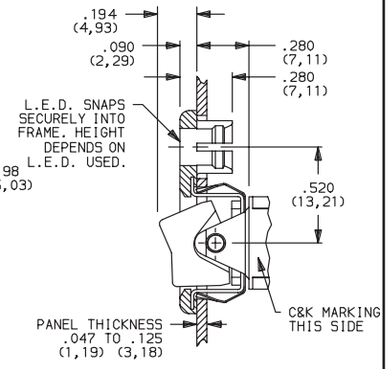

LED not included.
For LED information, see page G-24.

OPTION CODE	FRAME COLOR
2	BLACK
NONE	No Frame Color (J15 or J25 options)
1	WHITE

Finish: Matte. Other colors, custom actuator markings and legends available, consult Customer Service Center.

NOTE: Actuators & frames available separately, see pages G-21 through G-22. J51, J52, J60 & J61 Actuators available with 71XX, 72XX, U1XX & U2XX models and C, W-W5, Z and Z3 terminations.

J60 LEVER, SNAP-IN

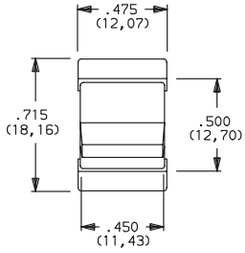

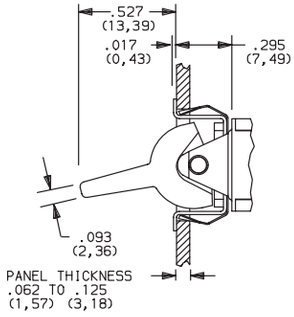

No frame color choice required

PANEL MOUNTING

J51, J60 & J61 Actuators

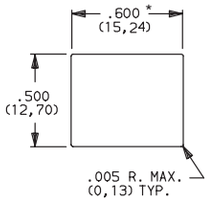

J52 Actuator

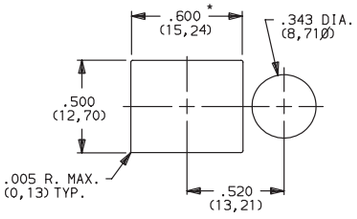

For J51, J52: Increase this dimension to .620/.625 (15,75/15,88) for .060/.125(1,52/3,18) thk. panels.

J61 LEVER WITH FRAME, SNAP-IN

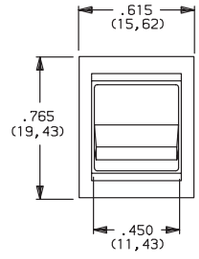

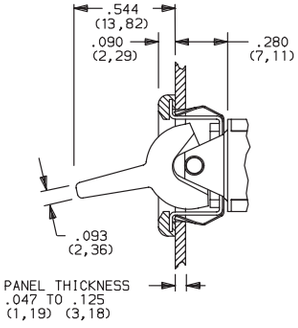

Third Angle Projection

Dimensions are shown: Inches (mm)
Specifications and dimensions subject to change

ACTUATOR–SNAP-IN FRONT MOUNT

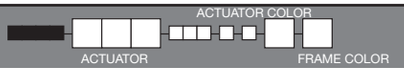

OPTION CODE	ACTUATOR COLOR
2	BLACK
1	WHITE
3	RED

OPTION CODE	FRAME COLOR
2	BLACK
NONE	No Frame Color (J90 options)
1	WHITE

Finish: Matte. Other colors, custom actuator markings and legends available, consult Customer Service Center.

NOTE: Actuators & frames available separately, see pages G-21 through G-22. J62, J90 & J91 Actuators available with 71XX, 72XX, U1XX & U2XX models and C, W-W5, Z & Z3 terminations.

J62 LEVER WITH FRAME FOR LED, SNAP-IN

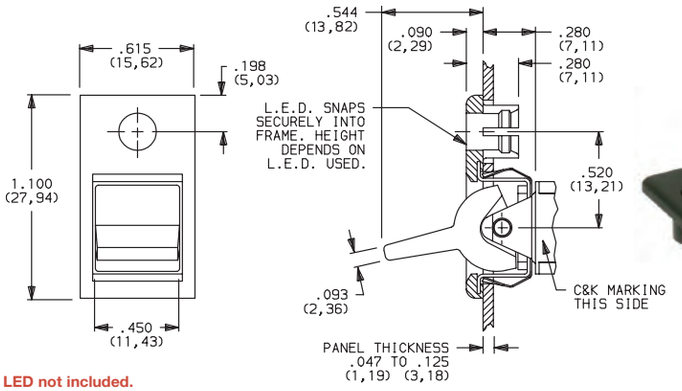

LED not included.
For LED information, see page H-25.

J90 LEVER, SNAP-IN

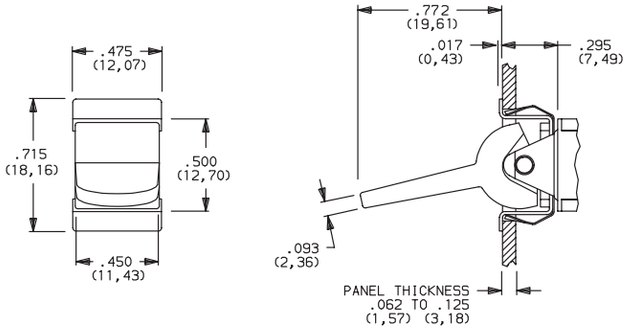

No frame color choice required.

J91 LEVER WITH FRAME, SNAP-IN

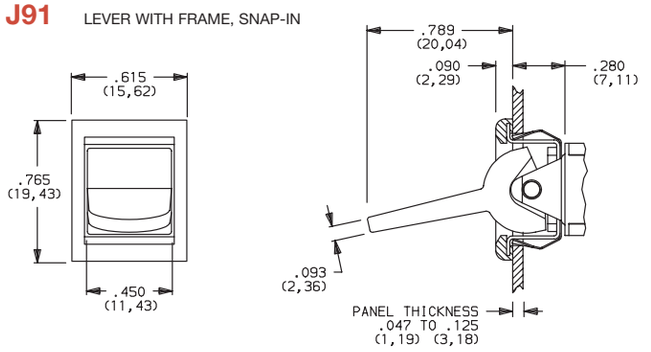

PANEL MOUNTING

J62 Actuator

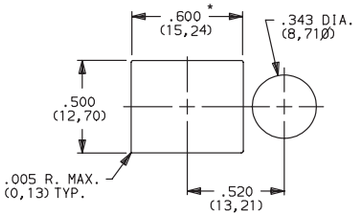

J90, J91 & J93 Actuators

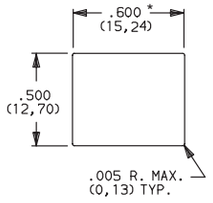

* For J90: Increase this dimension to .620/.625 (15,75/15,88) for .091/.125 (2,31/3,18) thk. panels. For J91: Increase this dimension to .620/.625 (15,75/15,88) for .060/.125 (1,52/3,18) thk. panels.

Third Angle Projection

Dimensions are shown: Inches (mm)
Specifications and dimensions subject to change

7000 Series
Miniature Rocker & Lever Handle Switches

ACTUATOR–REAR MOUNT

ACTUATOR FRAME COLOR

J11 ROCKER WITH FRAME

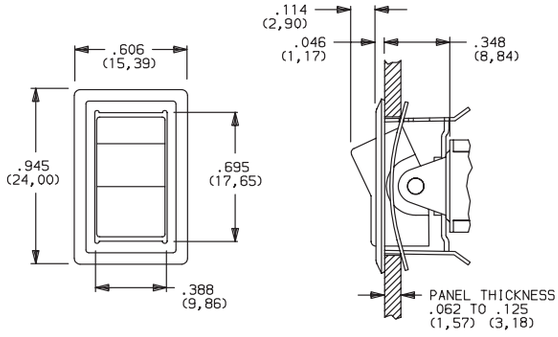

J19 ROCKER WITH FRAME

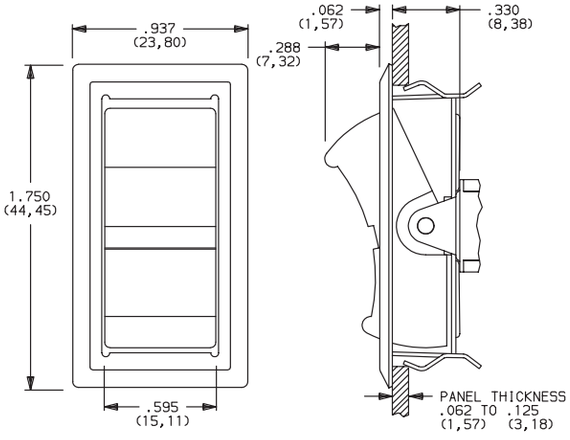

J21 LEVER WITH FRAME

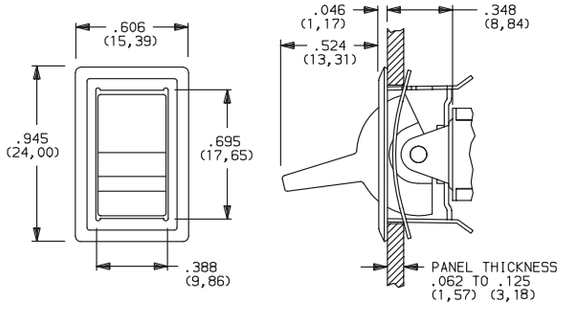

J37 ROCKER WITH FRAME

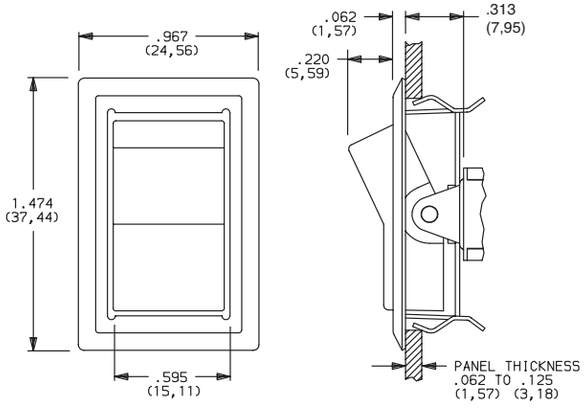

OPTION CODE	ACTUATOR COLOR
2	BLACK
1	WHITE
3	RED

OPTION CODE	FRAME COLOR
2	BLACK
1	WHITE

Actuator finish: Matte. Frame finish: Gloss. Other colors, custom actuator markings and legends available, consult Customer Service Center.

NOTE: Actuators & frames available separately, see pages G-21 through G-22. J11, J19, J21 & J37 Actuators available with C, W-W5, Z & Z3 terminations.

PANEL MOUNTING

J11 & J21 Actuators

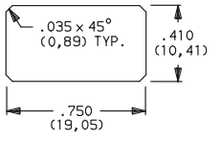

J19 Actuator

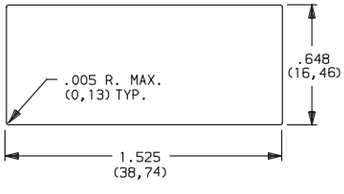

J37 Actuator

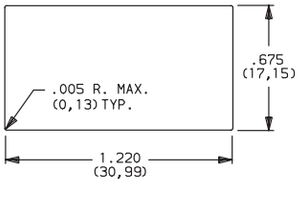

Third Angle Projection

Dimensions are shown: Inches (mm)
Specifications and dimensions subject to change

ACTUATOR–PC MOUNT

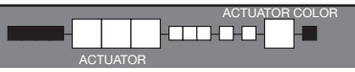

OPTION CODE	ACTUATOR COLOR
2	BLACK
1	WHITE
3	RED

Finish: Matte. Other colors, custom actuator markings and legends available, consult Customer Service Center.

NOTE: Some permissible actuator/termination combinations may lack clearance between actuator and PC board, and care must be exercised to accommodate this condition.

Actuators available separately, see page G-21 through G-22. J1, J2 & J8 actuators available with A, A3, AV2, AV3, AW3 & V2 terminations. J3 actuators available with AV2, AV3 & V2-V61 terminations. J50 actuators available with A (DP, 3P models only), A3 (DP, 3P models only), AV2, AV3, AW3 (DP, 3P models only) & V2-V61 terminations.

J1 ROCKER

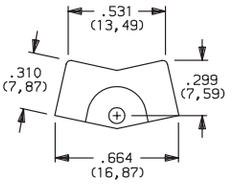

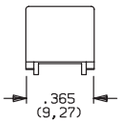

J2 LEVER

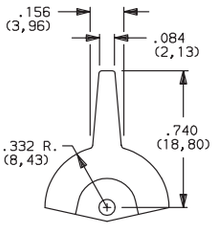

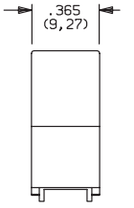

J3 ROCKER

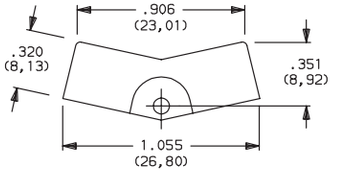

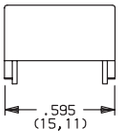

J8 ROCKER

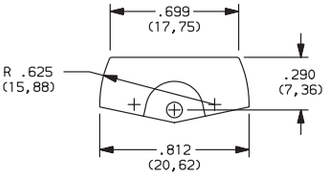

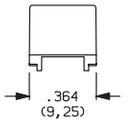

J50 ROCKER

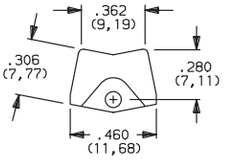

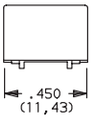

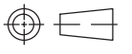

Third Angle Projection

Dimensions are shown: Inches (mm)
Specifications and dimensions subject to change

ACTUATOR–PC MOUNT

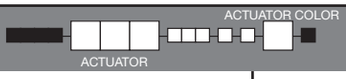

J60 LEVER

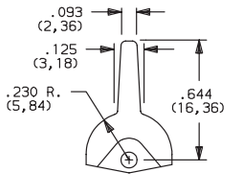

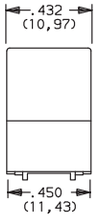

OPTION CODE	ACTUATOR COLOR
2	BLACK
1	WHITE
3	RED

Finish: Matte. Other colors, custom actuator markings and legends available, consult Customer Service Center.

NOTE: Some permissible actuator/termination combinations may lack clearance between actuator and PC board, and care must be exercised to accommodate this condition.

Actuators available separately, see page G-21 through G-22. J60 & J90 actuators available with A (DP, 3P models only), A3 (DP, 3P models only), AV2, AV3, AW3 (DP, 3P models only) & V2-V61 terminations.

J90 LEVER

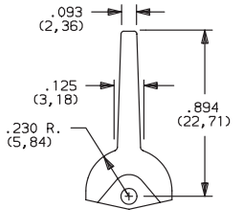

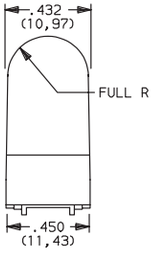

TERMINATIONS

Z SOLDER LUG

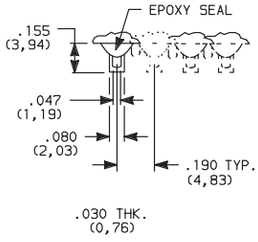

SPDT thru 4PDT

Not available with P, R or S contact materials. Available actuators, see pages G-7 through G-13.

C PC THRU-HOLE

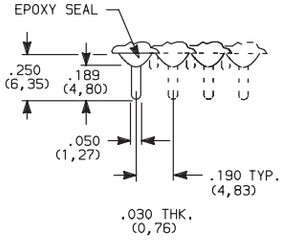

PC MOUNTING

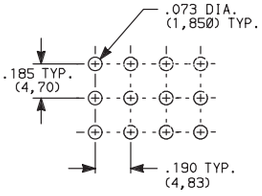

SPDT thru 4PDT **NOTE:** Available actuators, see pages G-7 through G-13.

Z3 QUICK CONNECT

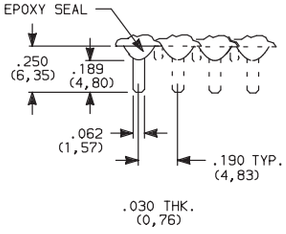

SPDT thru 4PDT

Not available with P, R or S contact materials. Available actuators, see pages G-7 through G-13. Mating quick connector available; order part number 530100000, page G-22.

W, W3, W5 WIRE WRAP

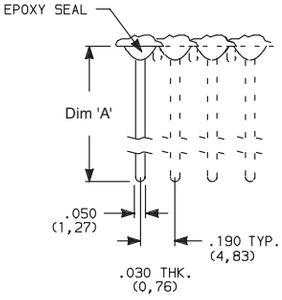

OPTION CODE	DIM 'A'
W	.750 (19,05)
W3	.425 (10,80)
W5	1.305 (33,15)

SPDT thru 4PDT

NOTE: Available actuators, see pages G-7 through G-13.

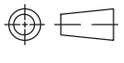

Third Angle Projection

Dimensions are shown: Inches (mm)
Specifications and dimensions subject to change

TERMINATIONS

A RIGHT ANGLE, PC THRU-HOLE

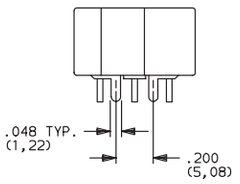

Actuator Shown In Pos. 1

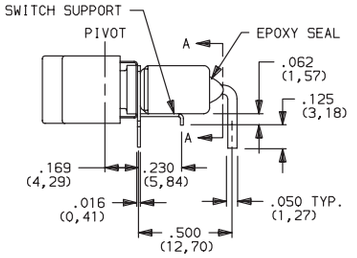

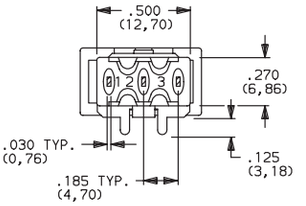

SECTION A-A

7101J1ABE2
Horizontal Actuation
SPDT

A3 RIGHT ANGLE, SNAP-IN, PC THRU-HOLE

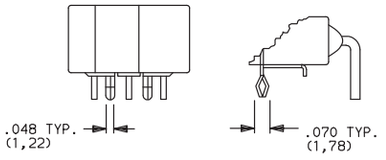

AW3 RIGHT ANGLE, EXTENDED, PC THRU-HOLE

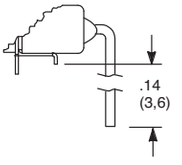

PC MOUNTING

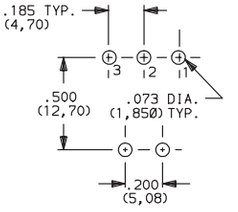

Not available with I seal option. Available actuators, see pages G-6 and G-12.
Terminal bend radii and lead-in manufacturing option.

NOTE: PC pattern must clear switch support leg.

A RIGHT ANGLE, PC THRU-HOLE

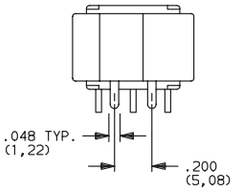

Actuator Shown In Pos. 1

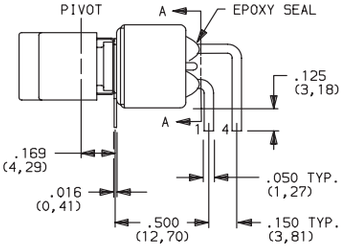

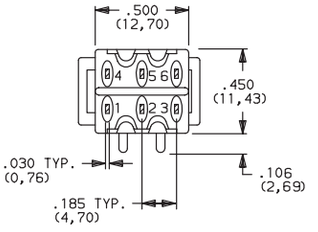

SECTION A-A

7201J1ABE2
Horizontal Actuation
DPDT

A3 RIGHT ANGLE, SNAP-IN, PC THRU-HOLE

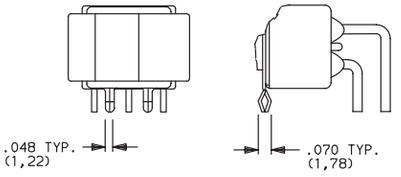

PC MOUNTING

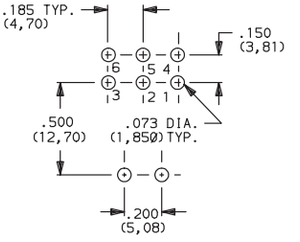

Not available with I seal option. Available actuators, see pages G-6 and G-12.
Terminal bend radii and lead-in manufacturing option.

Third Angle Projection

Dimensions are shown: Inches (mm)
Specifications and dimensions subject to change

TERMINATIONS

A RIGHT ANGLE, PC THRU-HOLE

7301J1ABE2
Horizontal Actuation
3PDT

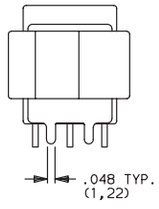

Actuator Shown In Pos. 1

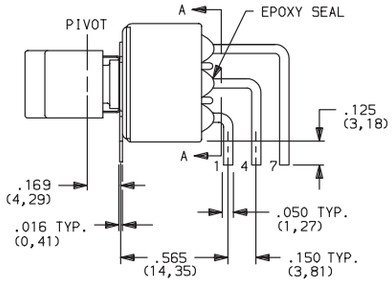

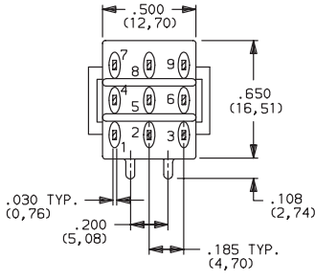

SECTION A-A

PC MOUNTING

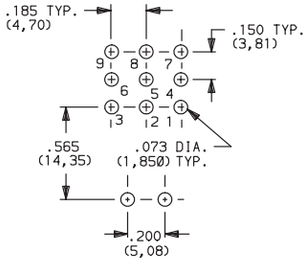

Not available with I seal option. Available actuators, see pages G-6 and G-12.
Terminal bend radii and lead-in manufacturing option.

AV2 VERTICAL RIGHT ANGLE, PC THRU-HOLE, .150" PITCH

7101J1AV2BE2
Vertical Actuation
SPDT

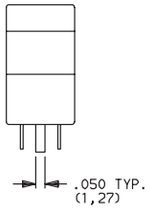

Actuator Shown In Pos. 1

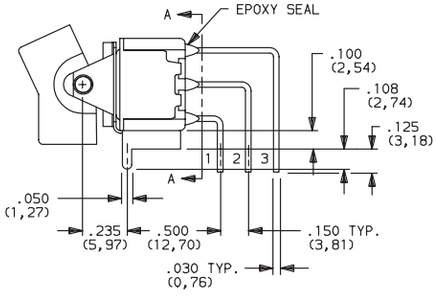

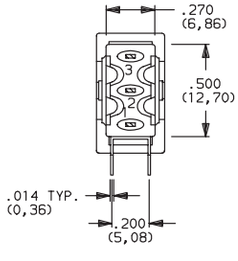

SECTION A-A

AV3 VERTICAL RIGHT ANGLE, SNAP-IN, PC THRU-HOLE, .150" PITCH

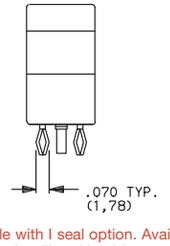

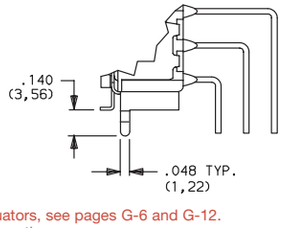

PC MOUNTING

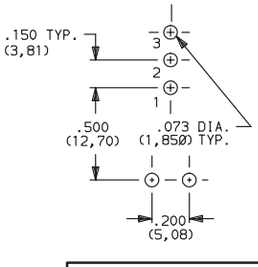

Not available with I seal option. Available actuators, see pages G-6 and G-12.
Terminal bend radii and lead-in manufacturing option.

Third Angle Projection

Dimensions are shown: Inches (mm)
Specifications and dimensions subject to change

TERMINATIONS

AV2
VERTICAL RIGHT ANGLE, PC THRU-HOLE,
.150" PITCH

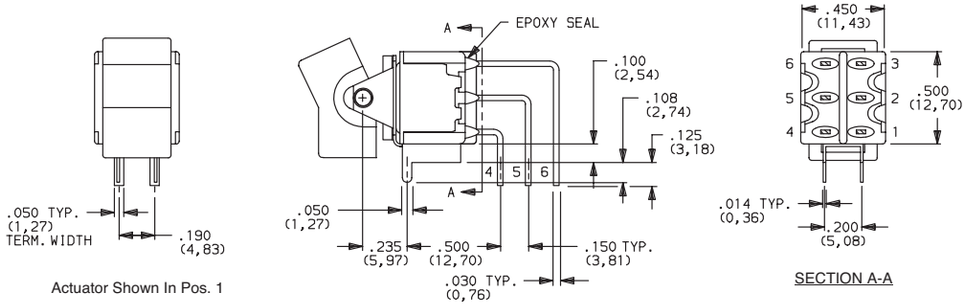

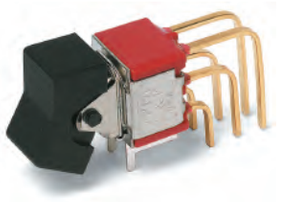

7201J1AV2BE2
Vertical Actuation
DPDT

AV3
VERTICAL RIGHT ANGLE, SNAP-IN, PC THRU-HOLE,
.150" PITCH

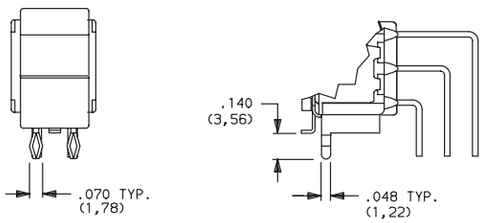

PC MOUNTING

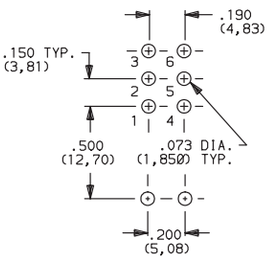

Not available with I seal option. Available actuators, see pages G-6 and G-12.
Terminal bend radii and lead-in manufacturing option.

AV2
VERTICAL RIGHT ANGLE, PC THRU-HOLE,
.150" PITCH

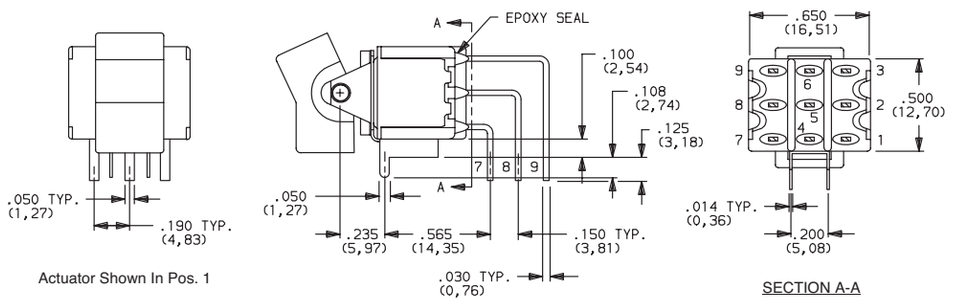

7301J1AV2BE2
Vertical Actuation
3PDT

AV3
VERTICAL RIGHT ANGLE, SNAP-IN, PC THRU-HOLE,
.150" PITCH

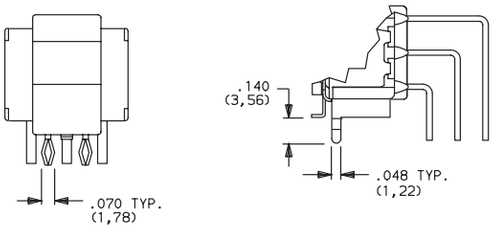

PC MOUNTING

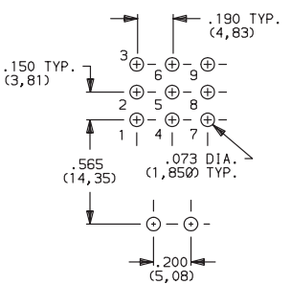

Not available with I seal option. Available actuators, see pages G-6 and G-12.
Terminal bend radii and lead-in manufacturing option.

Third Angle Projection

Dimensions are shown: Inches (mm)
Specifications and dimensions subject to change

TERMINATIONS

AV2 VERTICAL RIGHT ANGLE, PC THRU-HOLE, .150" PITCH

7401J1AV2BE2
Vertical Actuation
4PDT

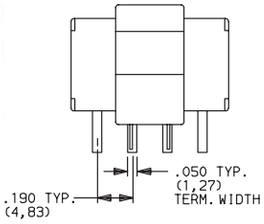

Actuator Shown In Pos. 1

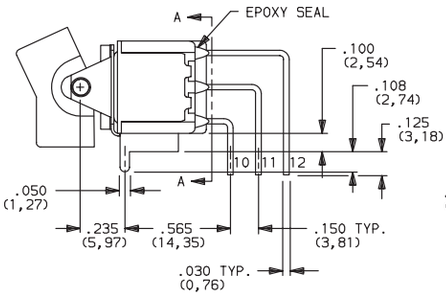

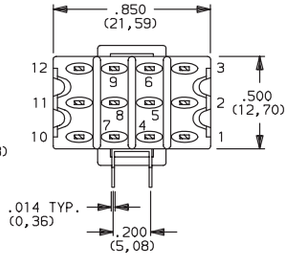

SECTION A-A

AV3 VERTICAL RIGHT ANGLE, SNAP-IN, PC THRU-HOLE, .150" PITCH

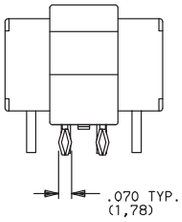

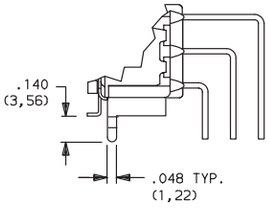

PC MOUNTING

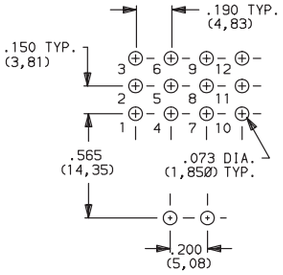

Not available with I seal option. Available actuators, see pages G-6 and G-12.
Terminal bend radii and lead-in manufacturing option.

V5 VERTICAL RIGHT ANGLE, PC THRU-HOLE, .150" PITCH

7101J1V5BE2
Vertical Actuation
SPDT

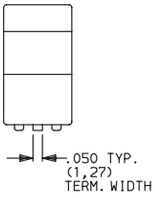

Actuator Shown In Pos. 1

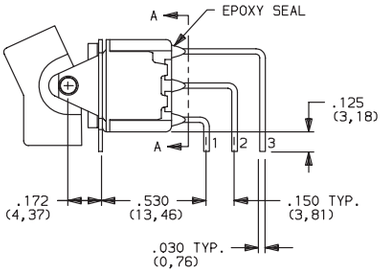

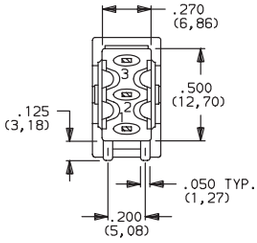

SECTION A-A

V51 VERTICAL RIGHT ANGLE, SNAP-IN, PC THRU-HOLE, .150" PITCH

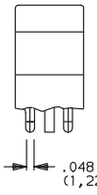

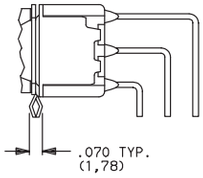

PC MOUNTING

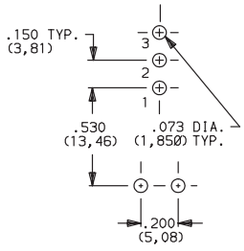

Not available with I seal option. Available actuators, see pages G-6 and G-12.
Terminal bend radii and lead-in manufacturing option.

Third Angle Projection

Dimensions are shown: Inches (mm)
Specifications and dimensions subject to change

TERMINATIONS

V5 VERTICAL RIGHT ANGLE, PC THRU-HOLE, .150" PITCH

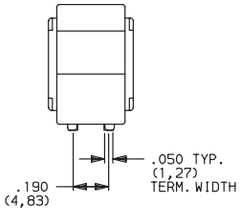

Actuator Shown In Pos. 1

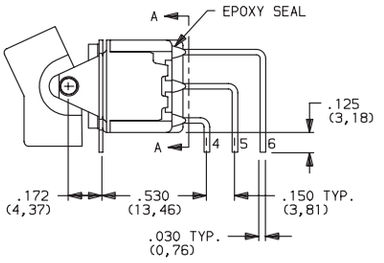

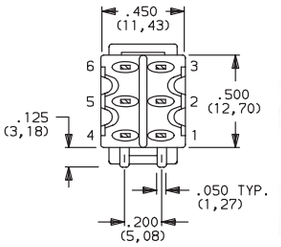

SECTION A-A

7201J1V5BE2
Vertical Actuation
DPDT

V51 VERTICAL RIGHT ANGLE, SNAP-IN, PC THRU-HOLE, .150" PITCH

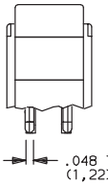

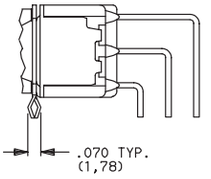

PC MOUNTING

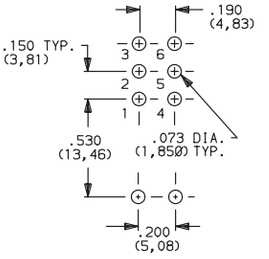

Not available with I seal option. Available actuators, see pages G-6 and G-12.
Terminal bend radii and lead-in manufacturing option.

V2, V6, V7, V8 VERTICAL MOUNT, V-BRACKET

V61 VERTICAL MOUNT, V-BRACKET, SNAP-IN

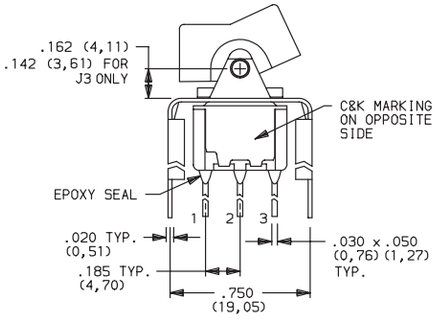

Actuator Shown In Pos. 1

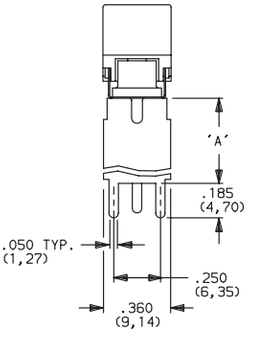

PC MOUNTING

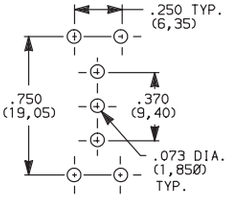

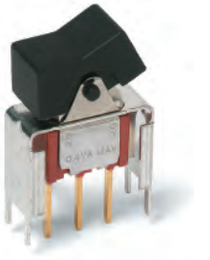

7101J1__BE2
SPDT

OPTION CODE	DIM 'A'
V2, V21	.555 (14,10)
V6, V61	.460 (11,68)
V7	.630 (16,00)
V8	.953 (24,21)

Not available with I seal option.
Available actuators, see pages G-6 and G-12.

Third Angle Projection

Dimensions are shown: Inches (mm)
Specifications and dimensions subject to change

TERMINATIONS

V2, V6, V7, V8 VERTICAL MOUNT, V-BRACKET
V21, V61 VERTICAL MOUNT, V-BRACKET, SNAP-IN

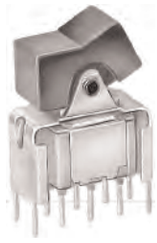

7201J1__BE2
DPDT

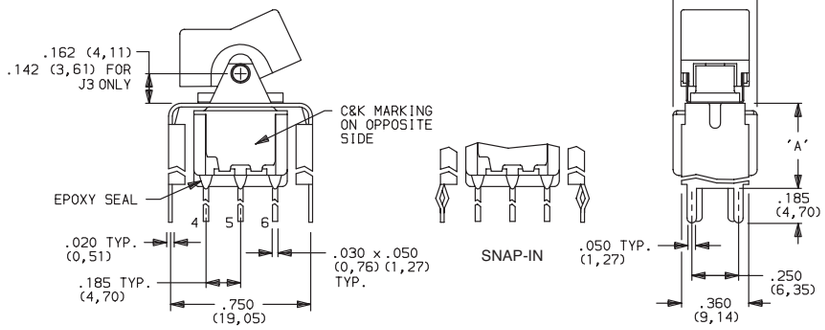

Actuator Shown In Pos. 1

PC MOUNTING

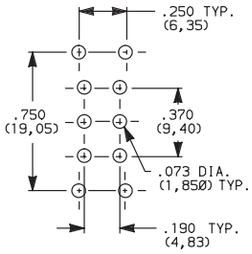

OPTION CODE	DIM 'A'
V2, V21	.555 (14,10)
V6, V61	.460 (11,68)
V7	.630 (16,00)
V8	.953 (24,21)

Not available with I seal option.
Available actuators, see pages G-6 and G-12.

V2, V7, V8 VERTICAL MOUNT, V-BRACKET
V21 VERTICAL MOUNT, V-BRACKET, SNAP-IN

7301J1__BE2
3PDT

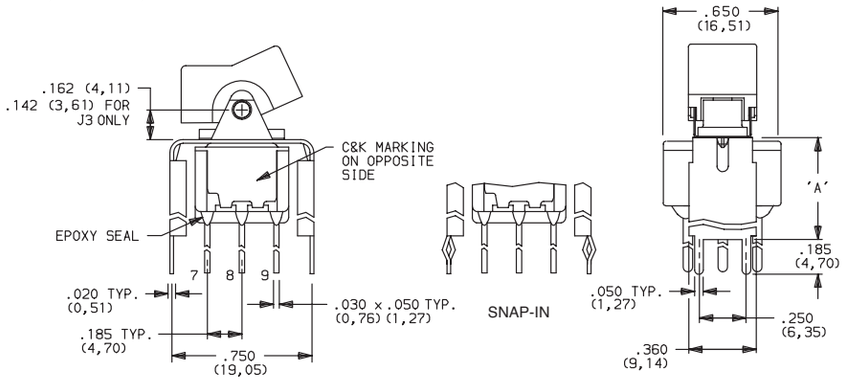

Actuator Shown In Pos. 1

PC MOUNTING

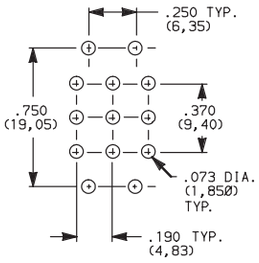

OPTION CODE	DIM 'A'
V2, V21	.555 (14,10)
V7	.630 (16,00)
V8	.953 (24,21)

Not available with I seal option.
Available actuators, see pages G-6 and G-12.

V2, V7, V8 VERTICAL MOUNT, V-BRACKET
V21 VERTICAL MOUNT, V-BRACKET, SNAP-IN

7401J1__BE2
4PDT

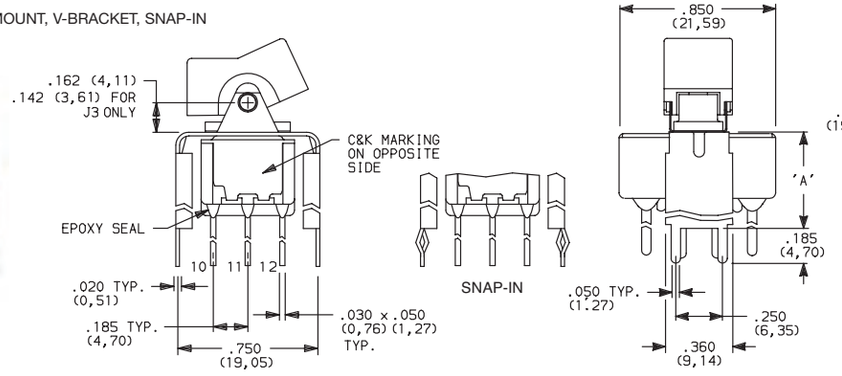

Actuator Shown In Pos. 1

PC MOUNTING

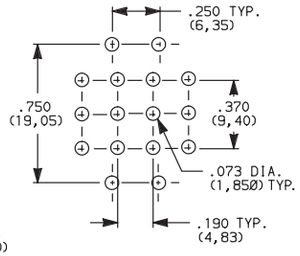

OPTION CODE	DIM 'A'
V2, V21	.555 (14,10)
V7	.630 (16,00)
V8	.953 (24,21)

Not available with I seal option.
Available actuators, see pages G-6 and G-12.

Third Angle Projection

Dimensions are shown: Inches (mm)
Specifications and dimensions subject to change

TERMINATIONS

V3, V4, V9 VERTICAL MOUNT, V-BRACKET
V31 VERTICAL MOUNT, V-BRACKET, SNAP-IN

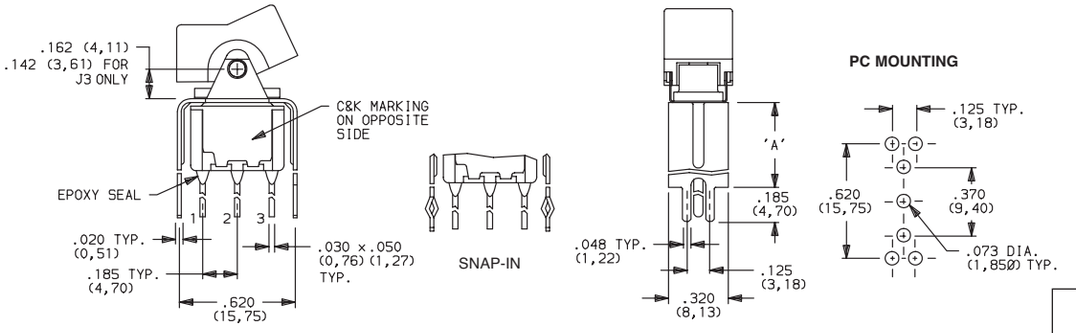

Actuator Shown In Pos. 1

7101J1__BE2
SPDT

OPTION CODE	DIM 'A'
V3, V31	.460 (11,68)
V4	.630 (16,00)
V9	1.150 (29,21)

Not available with I seal option.
Available actuators, see pages G-6 and G-12.

V3, V4, V9 VERTICAL MOUNT, V-BRACKET
V31 VERTICAL MOUNT, V-BRACKET, SNAP-IN

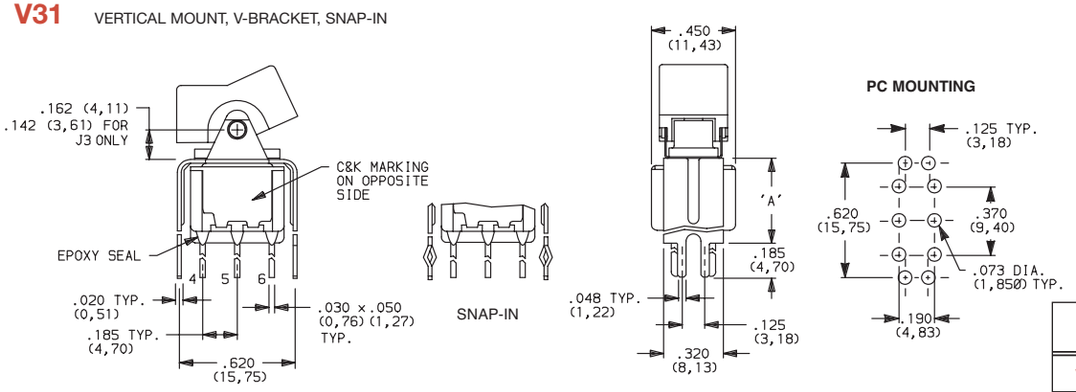

Actuator Shown In Pos. 1

7201J1__BE2
DPDT

OPTION CODE	DIM 'A'
V3, V31	.460 (11,68)
V4	.630 (16,00)
V9	1.150 (29,21)

Not available with I seal option.
Available actuators, see pages G-6 and G-12.

V4, V9 VERTICAL MOUNT, V-BRACKET

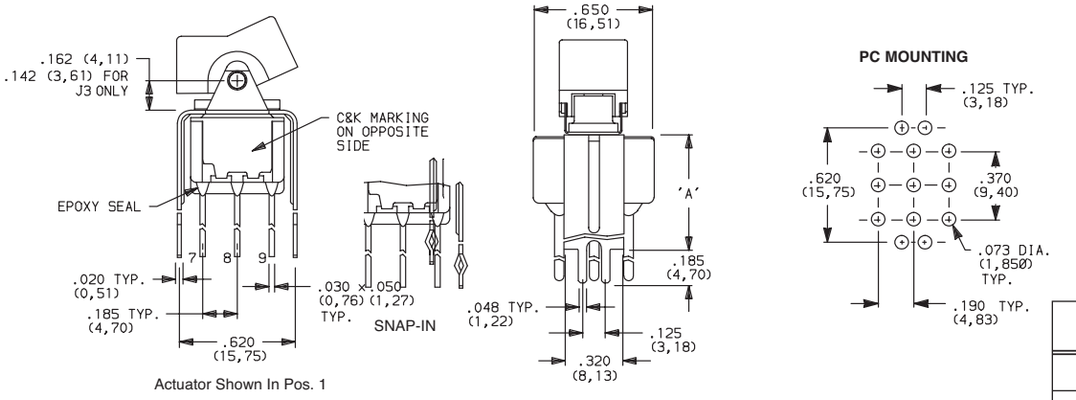

Actuator Shown In Pos. 1

7301J1__BE2
3PDT

OPTION CODE	DIM 'A'
V4	.630 (16,00)
V9	1.150 (29,21)

Not available with I seal option.
Available actuators, see pages G-6 and G-12.

Third Angle Projection

Dimensions are shown: Inches (mm)
Specifications and dimensions subject to change

7000 Series
Miniature Rocker & Lever Handle Switches

TERMINATIONS

V4, V9 VERTICAL MOUNT, V-BRACKET

7401J1__BE2
4PDT

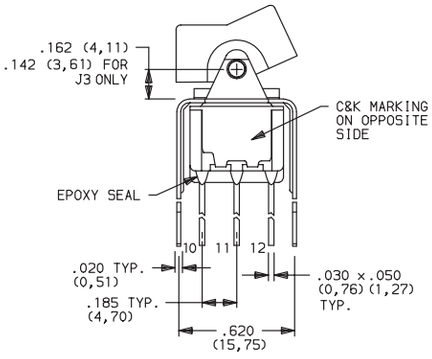

Actuator Shown In Pos. 1

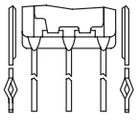

SNAP-IN

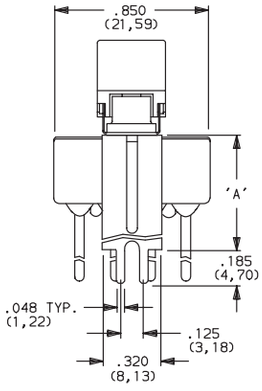

PC MOUNTING

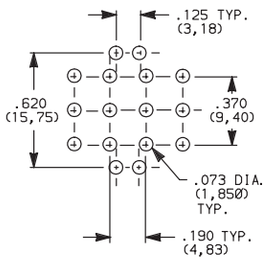

OPTION CODE	DIM 'A'
V4	.630 (16,00)
V9	1.150 (29,21)

Not available with I seal option.
Available actuators, see pages G-6 and G-12.

CONTACT MATERIAL

OPTION CODE	CONTACT MATERIAL	TERMINAL PLATING	RATINGS	
B	GOLD [1]	GOLD [1]	LOW LEVEL/ DRY CIRCUIT	0.4 VA MAX. @ 20 V AC OR DC MAX.
P		MATTE-TIN [6]		
Q	SILVER [4,5]	SILVER [5]	POWER	5 AMPS @ 120 V AC OR 28 V DC; 2 AMPS @ 250 V AC.
S		MATTE-TIN [6]		
G	GOLD OVER SILVER [2,3]	GOLD [3]	LOW LEVEL/DRY CIRCUIT OR POWER	0 4 VA MAX @ 20 V AC OR DC MAX OR 5 AMPS @ 120 V AC OR 28 V DC; 2 AMPS @ 250 V AC.
R		MATTE-TIN [6]		

* Note: See Technical Data section of this catalog for RoHS compliant and compatible definitions and specifications.

[1] CONTACTS & TERMINALS: Copper alloy, with gold plate over nickel plate.
[2] END CONTACTS: Coin silver, with gold plate over nickel plate.
[3] CENTER CONTACTS & ALL TERMINALS: Copper alloy, with gold plate over nickel plate.
[4] END CONTACTS: Coin silver, silver plated.
[5] CENTER CONTACT & ALL TERMINALS: Copper alloy, silver plated.
[6] TERMINALS: Copper alloy, with matte-tin over nickel plate.

U11-U415 model numbers c UL us with all options when ordered with G, Q, S & R contact material.

B contact material standard with all terminations except C, Z & Z3.

Q contact material standard with C, Z & Z3 terminations.

P, S & R, contact materials not available with Z & Z3 terminations.

NOTE: Any models supplied with Q, B, G S, P & R contact material are RoHS compliant.

SEAL

E EPOXY SEAL

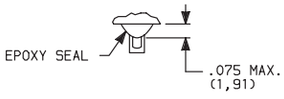

I EPOXY POTTED BASE

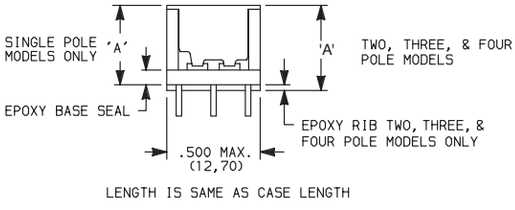

NO. POLES	DIM 'A'
SP	.410 (10,41)
DP	.440 (11,18)
3P	.505 (12,83)
4P	.505 (12,83)

Available with C, W through W5, Z & Z3 terminations.

Third Angle Projection

Dimensions are shown: Inches (mm)
Specifications and dimensions subject to change

AVAILABLE HARDWARE

Panel mounting hardware for rocker and lever handle switches is available separately. Mounting hardware consists of two screws, two nuts, two standoffs and two lockwashers per switch, and is available for panel thicknesses of 1/16, 3/32 and 1/8 inch. See part numbers below.

Qty	Part Number	Description
2	761103000	Standoffs
2	764100000	Mounting screws
2	764200000	Lock washers
2	764300000	Hex nuts

TYPICAL ASSEMBLY

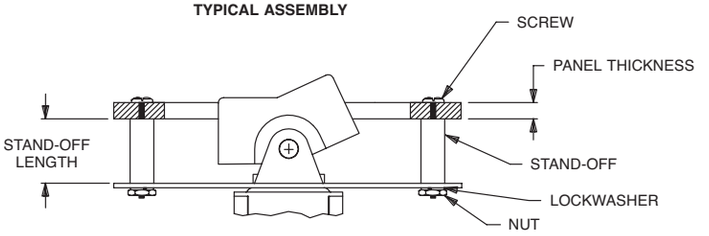

J1 & J2 actuators

PART NO.	PANEL THK.	STANDOFF LENGTH
761103000	1/8 IN. (3,18)	.233 (5,92)

J3 actuators

PART NO.	PANEL THK.	STANDOFF LENGTH
770603000	1/8 IN. (3,18)	.233 (5,92)

J10 actuators

PART NO.	PANEL THK.	STANDOFF LENGTH
770703000	1/8 IN. (3,18)	.233 (5,92)

MATERIAL

Screws, nuts, lockwashers: Stainless steel. Standoffs: Nylon, standard.

J1, J11, J15 & J16 Actuators

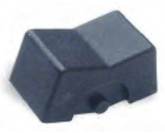

PART NO.
776A01000 **WHITE**
776A02263 **BLACK**
776A03000 **RED**

Material: Nylon
Finish: Matte

J2, J21, J25 & J26 Actuators

PART NO.
426D01000 **WHITE**
426D02263 **BLACK**
426D03000 **RED**

Material: Nylon
Finish: Matte

J3 & J37 Actuators

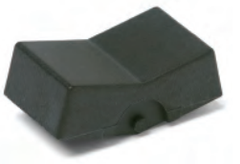

PART NO.
431D01000 **WHITE**
431D02263 **BLACK**
431D03000 **RED**

Material: Nylon
Finish: Matte

J50, J51 & J52 Actuators

PART NO.
775A01000 **WHITE**
775A02263 **BLACK**
775A03000 **RED**

Material: Nylon
Finish: Matte

J60, J61 & J62 Actuators

PART NO.
598101000 **WHITE**
613802263 **BLACK**
598103000 **RED**

Material: Nylon
Finish: Matte

J8 Actuator

PART NO.
488701000 **WHITE**
488702263 **BLACK**
488703000 **RED**

Material: Nylon
Finish: Matte

Dimensions are shown: Inches (mm)
Specifications and dimensions subject to change

7000 Series
Miniature Rocker & Lever Handle Switches

AVAILABLE HARDWARE

J90 & J91 Actuators

PART NO.

598001000 WHITE
598002263 BLACK
598003000 RED

Material: Nylon
Finish: Matte

J10 & J19 Actuators

PART NO.

769501000 WHITE
769502263 BLACK
769503000 RED

Material: Nylon
Finish: Matte

Fits Z3 Termination female connector

PART NO.

530100000

Available in loose pieces.

Frame for J11 & J21 Actuators

PART NO.

764500746 BLACK ENAMEL
764500747 WHITE ENAMEL

764601106 RETAINING SPRING

Material: Spring Steel

Frame for J16 & J26 Actuators

PART NO.

459101000 WHITE
459102000 BLACK
459103000 RED

Material: Nylon
Finish: Matte

Frame for J51, J61 & J91 Actuators

PART NO.

615601000 WHITE
615602263 BLACK
615603000 RED

Material: Nylon
Finish: Matte

Frame for J19 Actuator

PART NO.

781000746 BLACK ENAMEL
781000747 WHITE ENAMEL

Material: Spring Steel

Frame for J37 Actuator

PART NO.

445400746 BLACK ENAMEL
445400747 WHITE ENAMEL

Material: Spring Steel

Frame for J52 & J62 Actuators

PART NO.

613301000 WHITE
613302263 BLACK
613303000 RED

Material: Nylon
Finish: Matte

Third Angle Projection

Dimensions are shown: Inches (mm)
Specifications and dimensions subject to change

AVAILABLE HARDWARE

Frames snap into panel opening and are independent from switch mounting. Accurate positioning of the PC mounted switch relative to the panel opening is necessary to provide proper clearance between actuator and frame. Available in two basic styles and four panel thicknesses .047-.125 in. Material: Nylon. Finish: Matte.

TYPICAL APPLICATION

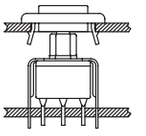

J1 & J2 Actuators

.047" (1,19) PANEL THK.	.062" (1,57) PANEL THK.	.090" (2,29) PANEL THK.	.125" (3,18) PANEL THK.
PART NO.	PART NO.	PART NO.	PART NO.
452902263	452702263	452802263	452602263 BLACK

J50, J60 & J90 Actuators

.047" (1,19) PANEL THK.	.062" (1,57) PANEL THK.	.090" (2,29) PANEL THK.	.125" (3,18) PANEL THK.
PART NO.	PART NO.	PART NO.	PART NO.
432502263	432602263	432702263	432802263 BLACK

PANEL MOUNTING

For part numbers
4529xxxxx, 4527xxxxx,
4528xxxxx, 4526xxxxx

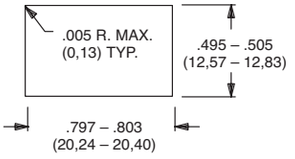

For part numbers
4325xxxxx, 4326xxxxx

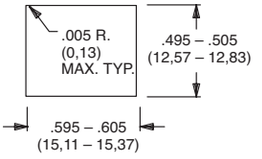

For part numbers
4327xxxxx, 4328xxxxx

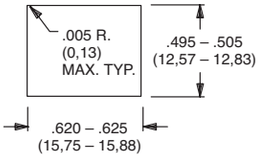

Third Angle Projection

Dimensions are shown: Inches (mm)
Specifications and dimensions subject to change

7000 Series
Miniature Rocker & Lever Handle Switches

AVAILABLE HARDWARE

Panel Inserts

Will fit Separate Snap-in frames for J50, J60 & J90 actuators

Above frames (part nos. 432XXXXXX) are also available with insert which accepts LED for indicator light assembly. Order insert separately from frame. Blank insert panel (without hole for LED) also available. **LED not included.**

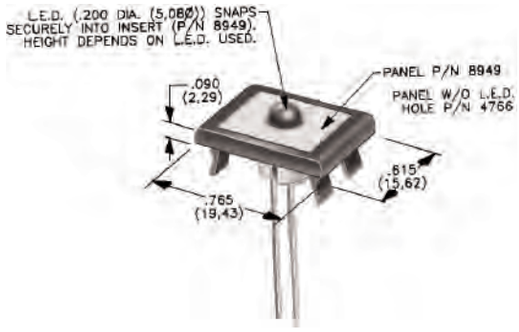

PANEL INSERT WITH HOLE FOR LED	BLANK PANEL INSERT WITHOUT HOLE FOR LED
PART NO.	PART NO.
894902000	476602000 BLACK

NOTE: Special colors, custom markings available, consult Customer Service Center.

LED INFORMATION

Process Information: Soldering to LED leads must be completed within 5 seconds at 500° F (260°C) maximum.

LEDs are not supplied with J52, J62 options. LED snaps into switch frame surrounding actuator and is wired externally.

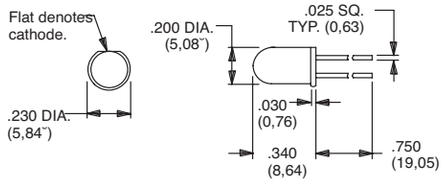

Suggested LED for J52 & J62 options.
Dimensions for reference only.

Third Angle Projection

Dimensions are shown: Inches (mm)
Specifications and dimensions subject to change

E Series
Sealed Miniature Rocker and Lever Handle Switches

Features/Benefits

- ***Sealed against solder and cleaning process contaminants***
- ***ESD Resistance—all actuator options***
- ***Rocker, case & bushing UL 94V-0***
- ***RoHS compliant***

Typical Applications

- ***Telecommunications***
- ***Instrumentation***
- ***Computers & peripherals***

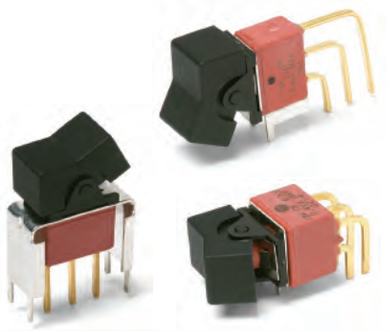

Specifications

CONTACT RATING: B contact material: 0.4 VA max. @ 20 V AC or DC max. Q contact material (E1XX & E2XX Models): 7.5 AMPS @125 V AC or 28 V DC; 3 AMPS @ 250 V AC. (E3XX Models): 5 AMPS @ 125 V AC or 28 V DC; 2 AMPS @ 250 V AC. See page G-36 for additional ratings.

ELECTRICAL LIFE: E1XX and E2XX models: 40,000 make-and-break cycles at full load. E3XX models: 30,000 cycles.

CONTACT RESISTANCE: Below 10 m Ω typ. initial @ 2-4 V DC, 100 mA, for both silver and gold plated contacts.

INSULATION RESISTANCE: 10^9 Ω min.

ELECTROSTATIC DISCHARGE (ESD) OPTION: All actuator options: 15,000 V DC max. @ sea level, actuator to terminals.

DIELECTRIC STRENGTH: 1000 Vrms min. @ sea level.

OPERATING TEMPERATURE: –30°C to 85°C.

SOLDERABILITY: Per MIL-STD-202F method 208D, or EIA RS-186E method 9 (1 hour steam aging).

Materials

CASE & BUSHING: Glass filled nylon 6/6, flame retardant, heat stabilized (UL 94V-0).

ACTUATOR: Nylon, black standard, internal o-ring seal standard with all actuators.

FRAME: Spring steel, black standard.

SWITCH SUPPORT: Brass or steel, matte-tin plated.

ACTUATOR PIVOT & MOUNTING BRACKET: Nylon.

ACTUATOR PIVOT RETAINER: Stainless steel.

CONTACTS & TERMINALS: B contact material: Copper alloy, with gold plate over nickel plate. Q contact material: Copper alloy, silver plated. See page G-36 for additional contact materials.

TERMINAL SEAL: Epoxy.

HARDWARE: Nut, Screw & Lockwasher: Stainless steel. Standoff: Nylon standard, aluminum available, consult Customer Service Center.

NOTE: Any models supplied with Q, B, G, S, P & R contact material are RoHS compliant.

NOTE: Specifications and materials listed above are for switches with standard options. For information on specific and custom switches, consult Customer Service Center.

Build-A-Switch

To order, simply select desired option from each category and place in the appropriate box. Available options are shown and described on pages G-26 through G-38. For additional options not shown in catalog, consult Customer Service Center. All models are process sealed to withstand machine soldering temperatures and pressure wash cleaning methods.

Switch Function
- **E101** SP On-None-On
- **E103** SP On-Off-On
- **E105** SP Mom.-Off-Mom.
- **E107** SP On-Off-Mom.
- **E108** SP On-None-Mom.
- **E201** DP On-None-On
- **E203** DP On-Off-On
- **E205** DP Mom.-Off-Mom.
- **E207** DP On-Off-Mom.
- **E208** DP On-None-Mom.
- **E211** DP On-On-On
- **E213** DP On-On-Mom.
- **E215** DP Mom.-On-Mom.
- **E301** 3P On-None-On

Actuator
- **J1** .531 long rocker
- **J2** Lever
- **J3** .906" long rocker
- **J11** Rocker with frame
- **J21** Lever with frame
- **J50** .362" long rocker
- **J60** Lever
- **J90** Lever

Terminations
- **A** Right angle, PC thru-hole
- **AV2** Vertical right angle, PC thru-hole
- **C** PC Thru-hole
- **Z** Solder lug
- **A3** Right angle, snap-in, PC thru-hole
- **AV3** Vertical right angle, snap-in, PC thru-hole
- **V3** .460" high, V-bracket
- **V4** .630" high, V-bracket
- **V5** Vertical right angle, PC thru-hole
- **V6** .460" high, V-bracket
- **V7** .630" high, V-bracket
- **V8** .953" high, V-bracket
- **V21** .555" high, V-bracket, snap-in
- **V31** .460" high, V-bracket, snap-in

Contact Material
- **B** Gold
- **P** Gold, matte tin
- **Q** Silver
- **S** Silver, matte-tin
- **G** Gold over silver
- **R** Gold over silver, matte-tin

Seal
- **E** Epoxy

Actuator Color
- **2** Black
- **3** Red

Frame Color
- **2** Black
- **NONE** No frame color required

Metal Frame Color
(J11, J21 Actuators)
- **2** Black

Dimensions are shown: Inches (mm)
Specifications and dimensions subject to change

E Series
Sealed Miniature Rocker and Lever Handle Switches

SWITCH FUNCTION

NO. POLES	MODEL NO.	SWITCH FUNCTION POS. 1	SWITCH FUNCTION POS. 2	SWITCH FUNCTION POS. 3	CONNECTED TERMINALS POS. 1	CONNECTED TERMINALS POS. 2	CONNECTED TERMINALS POS. 3	SCHEMATIC
		C&K marking on opposite side			C&K marking on opposite side			
SP	E101	ON	NONE	ON	2-3	N/A	2-1	SPDT
	E103	ON	OFF	ON		OPEN		
	E105	MOM.	OFF	MOM.				
	E107	ON	OFF	MOM.				
	E108	ON	NONE	MOM.		N/A		

SPDT

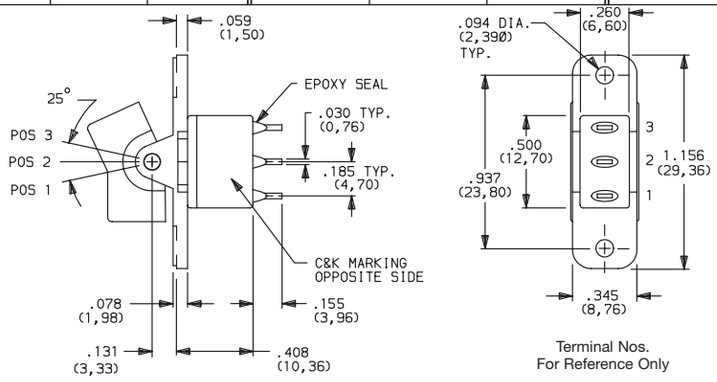

Part number shown: E101J1ZBE2

NO. POLES	MODEL NO.	SWITCH FUNCTION POS. 1	SWITCH FUNCTION POS. 2	SWITCH FUNCTION POS. 3	CONNECTED TERMINALS POS. 1	CONNECTED TERMINALS POS. 2	CONNECTED TERMINALS POS. 3	SCHEMATIC
DP	E201	ON	NONE	ON	2-3,5-6	N/A	2-1,5-4	DPDT
	E203	ON	OFF	ON		OPEN		
	E205	MOM.	OFF	MOM.				
	E207	ON	OFF	MOM.				
	E208	ON	NONE	MOM.		N/A		
	E211**	ON	ON	ON		2-3,5-4		
	E213**	ON	ON	MOM.				
	E215**	MOM.	ON	MOM.				

DPDT

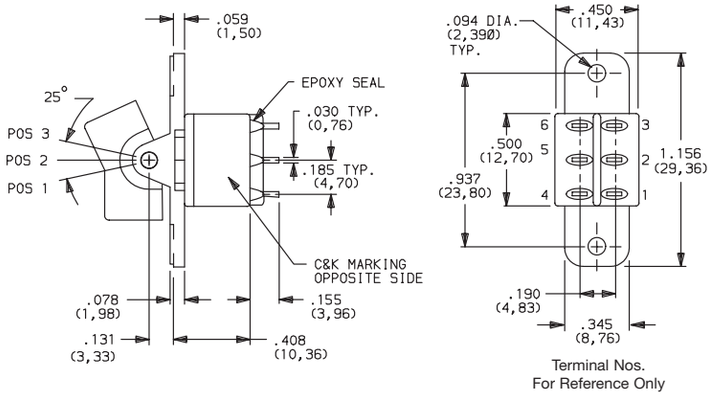

Part number shown: E201J1ZBE2

MOM. = Momentary

** Wiring for 3-way switch, Hardware available seperately, see Technical Data section of this catalog.

All models c UL us with all options when ordered with G, Q, R or S contact material.

Rocker

G

Third Angle Projection

Dimensions are shown: Inches (mm)
Specifications and dimensions subject to change

SWITCH FUNCTION

NO. POLES	MODEL NO.	SWITCH FUNCTION POS. 1	SWITCH FUNCTION POS. 2	SWITCH FUNCTION POS. 3	CONNECTED TERMINALS POS. 1	CONNECTED TERMINALS POS. 2	CONNECTED TERMINALS POS. 3	SCHEMATIC
		C&K marking on opposite side			C&K marking on opposite side			
3P	E301	ON	NONE	ON	2-3,5-6,8-9	N/A	2-1,5-4,8-7	3PDT

3PDT

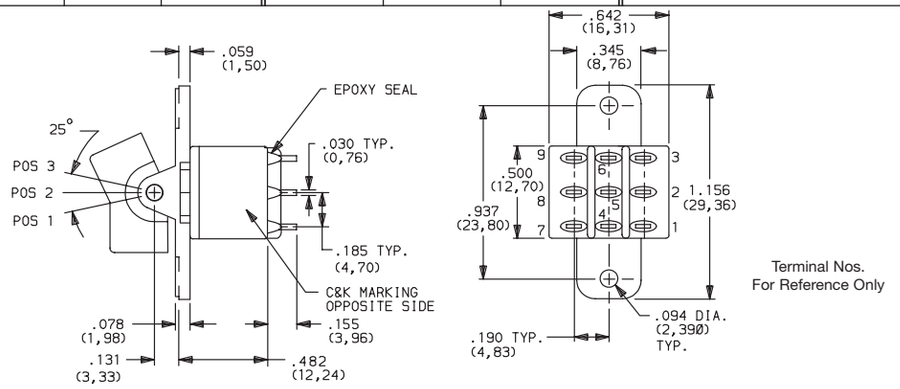

Part number shown: E301J1ZBE2

MOM. = Momentary

** Wiring for 3-way switch, see Technical Data section of this catalog.

All models cULus with all options when ordered with G, Q, R and S contact material.

ACTUATOR–PANEL REAR MOUNT

ACTUATOR COLOR
ACTUATOR

OPTION CODE	ACTUATOR COLOR
2	BLACK
3	RED

Finish: Matte. Other colors, custom actuator markings and legends available, consult Customer Service Center.

NOTE: Hardware: two each—mounting screws, nuts, lockwashers and standoffs for 1/8 inch thick panel are supplied standard on switches with panel mounting bracket. Internal o-ring actuator seal standard. Actuators available separately, see page G-36. Hardware available seperately, see Technical Data section of this catalog. J1, J2 actuators available with C, Z or Z3 terminations.

J1 LEVER

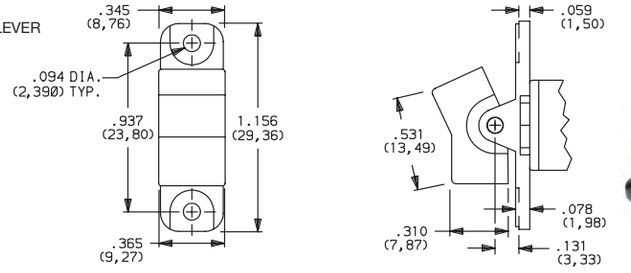

J2 LEVER

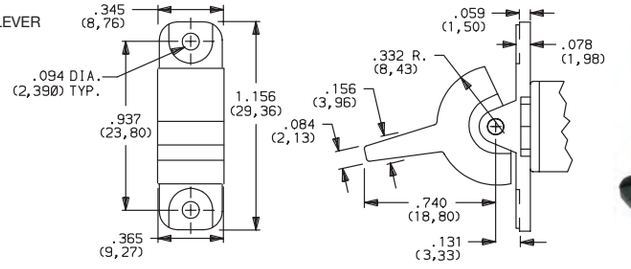

PANEL MOUNTING

J1 & J2 Actuators

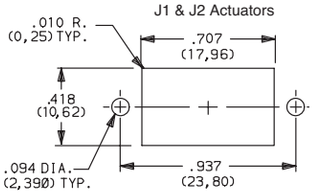

Rocker

Third Angle Projection

Dimensions are shown: Inches (mm)
Specifications and dimensions subject to change

E Series
Sealed Miniature Rocker and Lever Handle Switches

ACTUATOR–REAR MOUNT

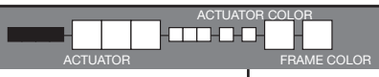

J11 ROCKER WITH FRAME

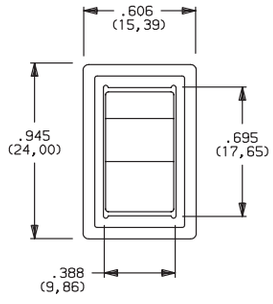

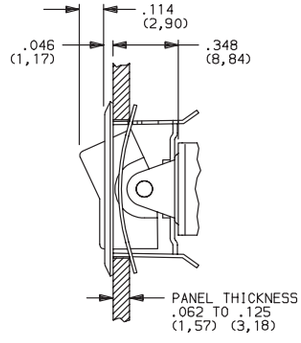

NOTE: This option has reduced anti-static capability.

OPTION CODE	ACTUATOR COLOR
2	BLACK
3	RED

OPTION CODE	FRAME COLOR
2	BLACK

J21 LEVER WITH FRAME

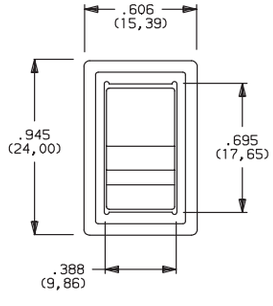

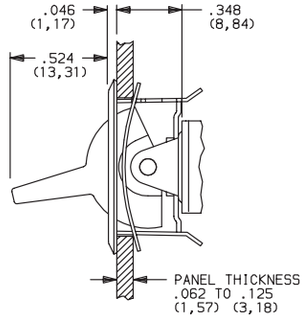

NOTE: This option has reduced anti-static capability.

Actuator finish: Matte, frame finish: gloss. Other colors, custom actuator markings and legends available, consult Customer Service Center.

NOTE: Internal o-ring actuator seal standard. Actuators & frames available separately, see page G-36. Hardware available seperately, see Technical Data section of this catalog. N. J11 & J21 actuators available with C, Z & Z3 terminations.

PANEL MOUNTING

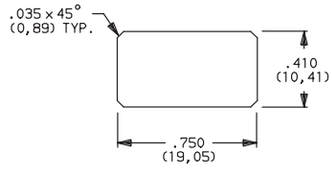

ACTUATOR–PC MOUNT

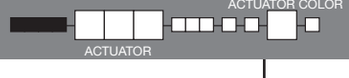

J1 ROCKER

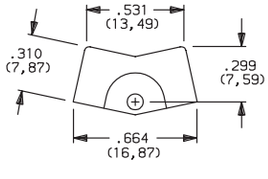

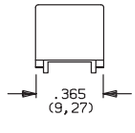

OPTION CODE	ACTUATOR COLOR
2	BLACK
3	RED

J2 LEVER

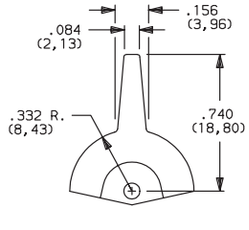

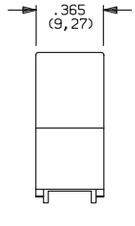

Finish: Matte. Other colors, custom actuator markings and legends available, consult Customer Service Center.

NOTE: Hardware: two each—mounting screws, nuts, lockwashers and standoffs for 1/8 inch thick panel are supplied standard on switches with panel mounting bracket. Internal o-ring actuator seal standard. Actuators available separately, see page G-36. Hardware available seperately, see Technical Data section of this catalog. J1, J2 actuators available with A, A3, AV2, AV3, V2-V61 terminations.

Third Angle Projection

Dimensions are shown: Inches (mm)
Specifications and dimensions subject to change

ACTUATOR–PC MOUNT

ACTUATOR COLOR
ACTUATOR

OPTION CODE	ACTUATOR COLOR
2	BLACK
3	RED

Finish: Matte. Other colors, custom actuator markings and legends available, consult Customer Service Center.

NOTE: Hardware: two each—mounting screws, nuts, lockwashers and standoffs for 1/8 inch thick panel are supplied standard on switches with panel mounting bracket. Internal o-ring actuator seal standard. Actuators available separately, see page G-36. Hardware available seperately, see Technical Data section of this catalog.

J3 actuators available with AV2, AV3 & V2-V61 terminations. Some permissible actuator/termination combinations may lack clearance between actuator and PC board, and care must be exercised to accommodate this condition.

J50, J60 & J90 actuators available with A, AV2, AV3, V2 – V61 terminations.

J3 ROCKER

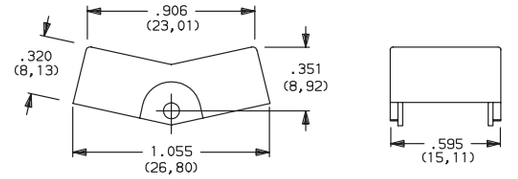

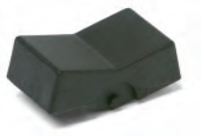

J50 ROCKER

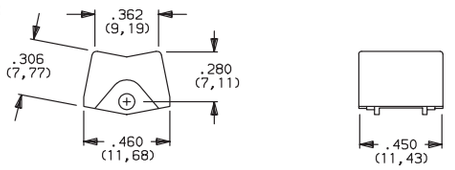

J60 LEVER

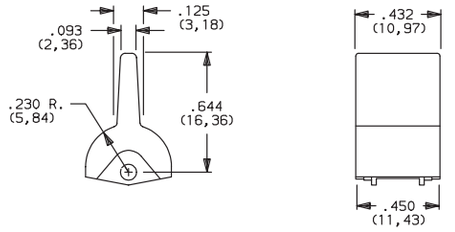

J90 LEVER

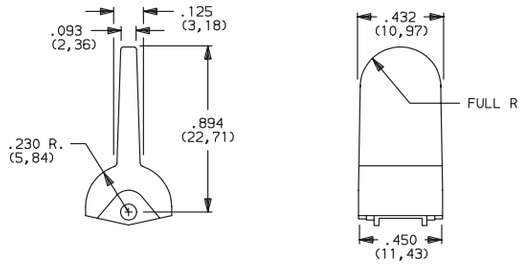

TERMINATIONS

Z SOLDER LUG

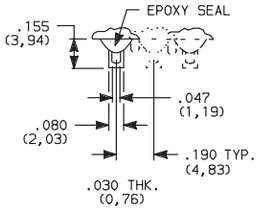

SPDT thru 3PDT

Not available with P, S, & R contact materials.
Available actuators, see page G-27-28.

C PC THRU-HOLE

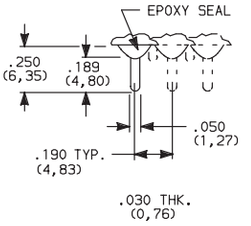

PC MOUNTING

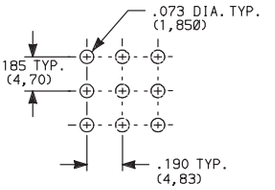

SPDT thru 3PDT

Third Angle Projection

Dimensions are shown: Inches (mm)
Specifications and dimensions subject to change

TERMINATIONS

Z3 QUICK CONNECT

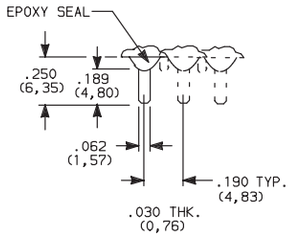

Not available with P, S, & R contact materials. Available actuators, see pages G-27 thru G-28. Mating quick connector available; order part number 530100000, page G-37.

SPDT thru 3PDT

A RIGHT ANGLE, PC THRU-HOLE

E101J1ABE2
Horizontal Actuation
SPDT

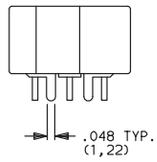

Actuator Shown In Pos. 1

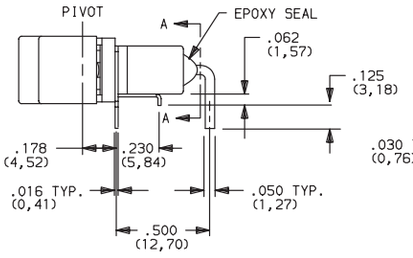

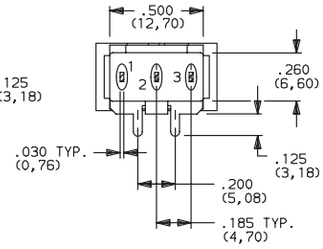

SECTION A-A

A3 RIGHT ANGLE, SNAP-IN, PC THRU-HOLE

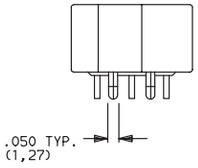

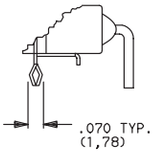

PC MOUNTING

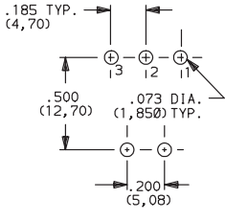

NOTE: Not available with J3, J50, J60 and J90 actuators.
Available actuators, see pages G-27 thru G-29.
Terminal bend radii and lead-in manufacturing option.

NOTE: PC mounting pattern must clear switch support leg.

A RIGHT ANGLE, PC THRU-HOLE

E201J1ABE2
Horizontal Actuation
DPDT

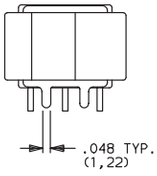

Actuator Shown In Pos. 1

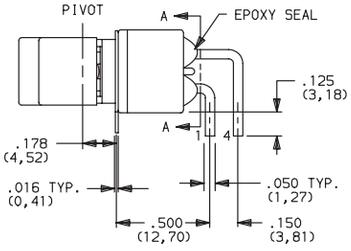

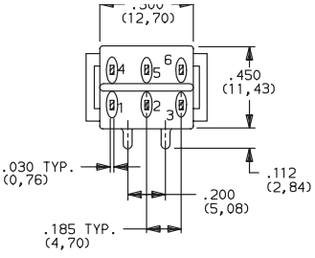

SECTION A-A

A3 RIGHT ANGLE, SNAP-IN, PC THRU-HOLE

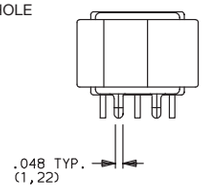

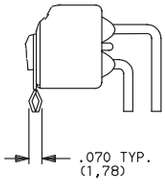

PC MOUNTING

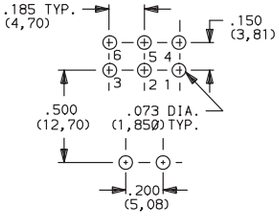

NOTE: Not available with J3 actuator.
Available actuators, see pages G-27 thru G-29.
Terminal bend radii and lead-in manufacturing option.

Third Angle Projection

Dimensions are shown: Inches (mm)
Specifications and dimensions subject to change

TERMINATIONS

A RIGHT ANGLE, PC THRU-HOLE

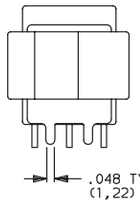

Actuator Shown In Pos. 1

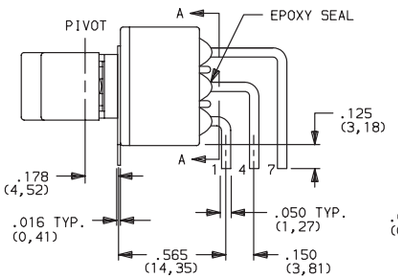

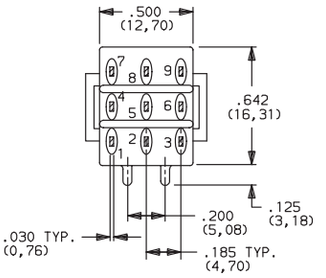

SECTION A-A

E301J1ABE2
Horizontal Actuation
3PDT

PC MOUNTING

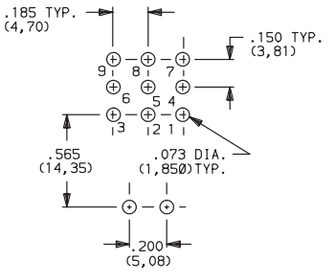

NOTE: Terminal bend radii and lead-in manufacturing option.
Available actuators, see pages G-27 thru G-29.

AV2 VERTICAL RIGHT ANGLE, PC THRU-HOLE, .150" PITCH

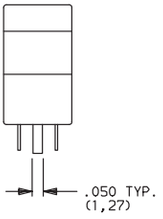

Actuator Shown In Pos. 1

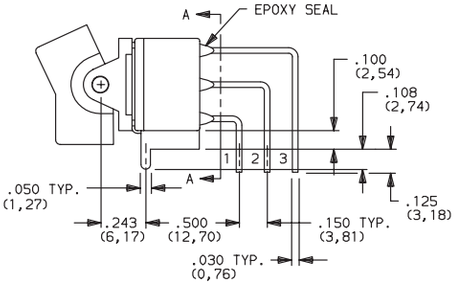

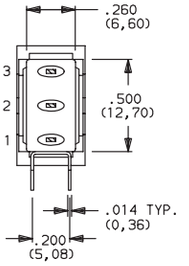

SECTION A-A

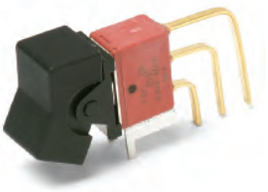

E101J1AV2BE2
Vertical Actuation
SPDT

AV3 VERTICAL RIGHT ANGLE, SNAP-IN, PC THRU-HOLE, .150" PITCH

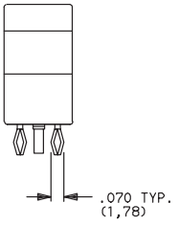

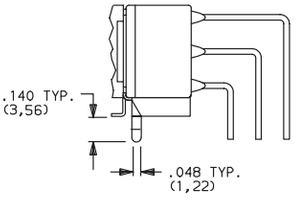

PC MOUNTING

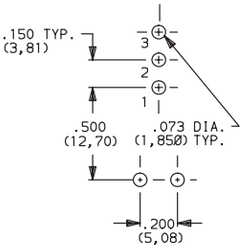

NOTE: Terminal bend radii and lead-in manufacturing option.
Available actuators, see pages G-27 thru G-29.

Third Angle Projection

Dimensions are shown: Inches (mm)
Specifications and dimensions subject to change

TERMINATIONS

AV2 VERTICAL RIGHT ANGLE, PC THRU-HOLE, .150" PITCH

E201J1AV2BE2
Vertical Actuation
DPDT

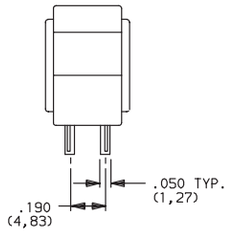

Actuator Shown In Pos. 1

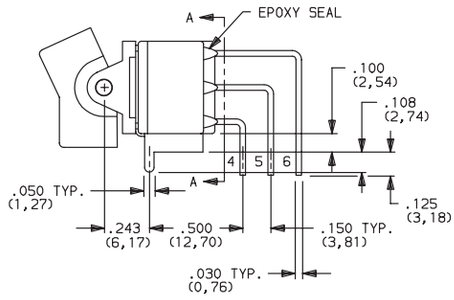

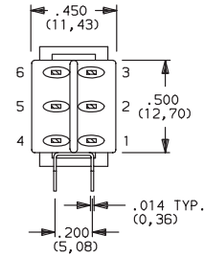

SECTION A-A

AV3 VERTICAL RIGHT ANGLE, SNAP-IN, PC THRU-HOLE, .150" PITCH

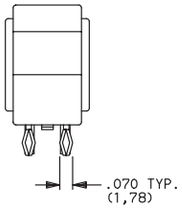

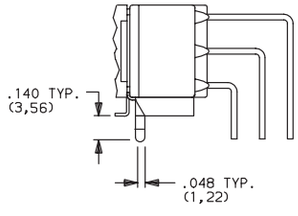

PC MOUNTING

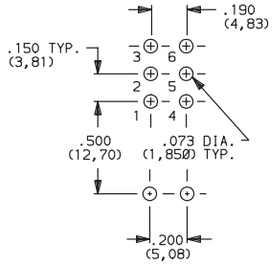

NOTE: Terminal bend radii and lead-in manufacturing option.
Available actuators, see pages G-27 thru G-29.

AV2 VERTICAL RIGHT ANGLE, PC THRU-HOLE, .150" PITCH

E301J1AV2BE2
Vertical Actuation
3PDT

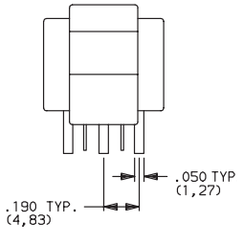

Actuator Shown In Pos. 1

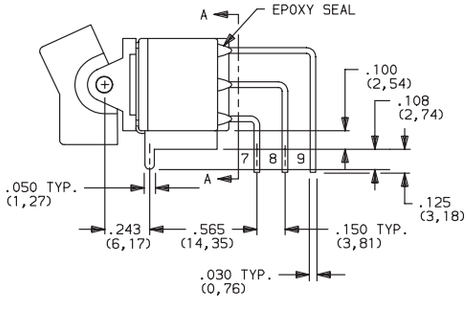

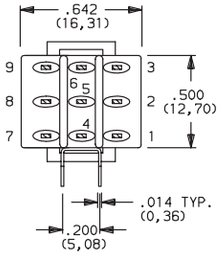

SECTION A-A

AV3 VERTICAL RIGHT ANGLE, SNAP-IN, PC THRU-HOLE, .150" PITCH

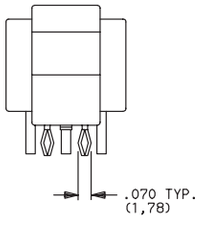

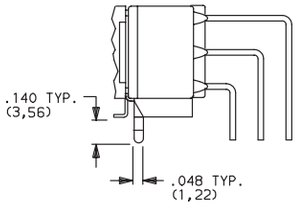

PC MOUNTING

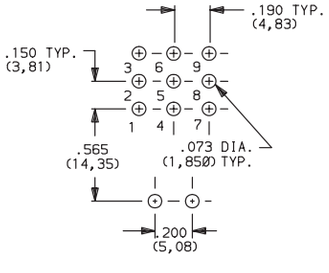

NOTE: Terminal bend radii and lead-in manufacturing option.
Available actuators, see pages G-27 thru G-29.

Third Angle Projection

Dimensions are shown: Inches (mm)
Specifications and dimensions subject to change

TERMINATIONS

V5 VERTICAL RIGHT ANGLE, PC THRU-HOLE, .150" PITCH

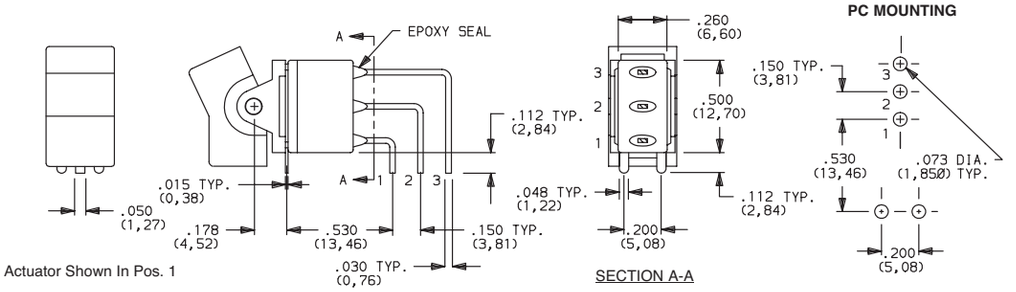

Actuator Shown In Pos. 1

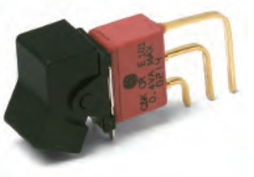

E101J1V5BE2
Vertical Actuation
SPDT

NOTE: Terminal bend radii and lead-in manufacturing option.
Available actuators, see pages G-27 thru G-29.

V5 VERTICAL RIGHT ANGLE, PC THRU-HOLE, .150" PITCH

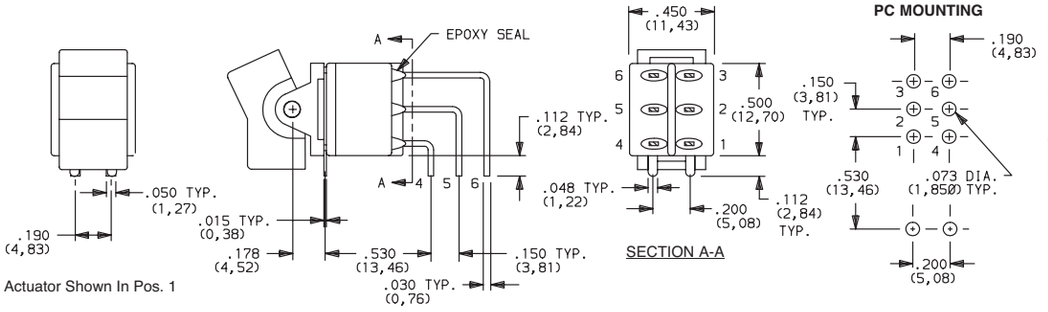

Actuator Shown In Pos. 1

E201J1V5BE2
Vertical Actuation
DPDT

NOTE: Terminal bend radii and lead-in manufacturing option.
Available actuators, see pages G-27 thru G-29.

TERMINATIONS

V6, V7, V8 VERTICAL MOUNT, V-BRACKET

V21 VERTICAL MOUNT, V-BRACKET, SNAP-IN

E101J1__BE2

SPDT

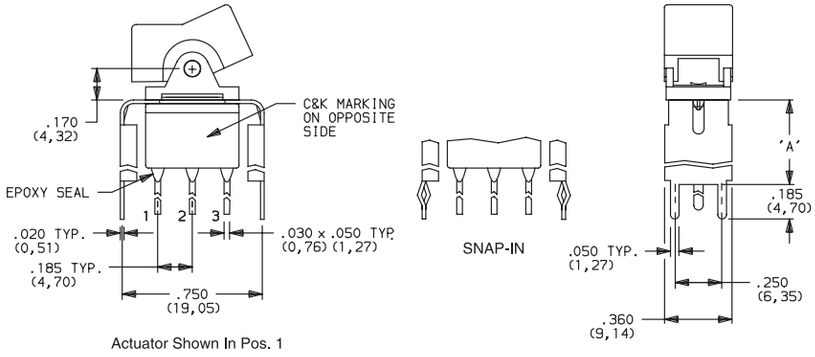

Actuator Shown In Pos. 1

PC MOUNTING

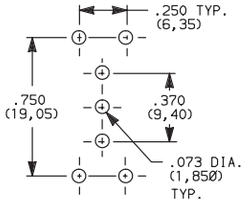

OPTION CODE	DIM 'A'
V21	.555 (14, 10)
V6	.460 (11, 68)
V7	.630 (16, 00)
V8	.953 (24, 21)

NOTE: Available actuators, see pages G-27 thru G-29.

V6, V7, V8 VERTICAL MOUNT, V-BRACKET

V21 VERTICAL MOUNT, V-BRACKET, SNAP-IN

E201J1__BE2

DPDT

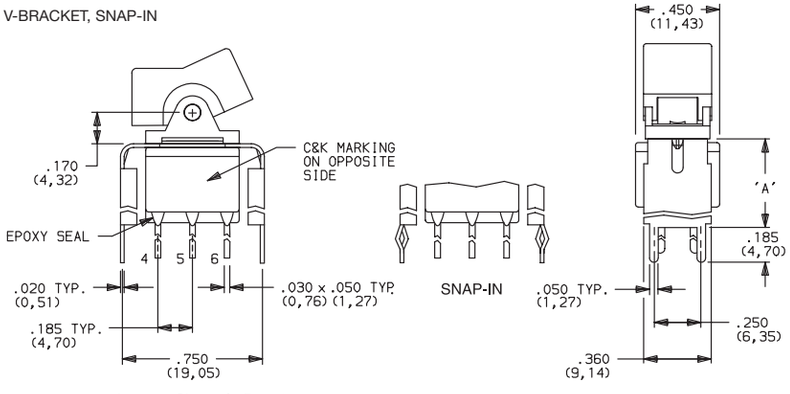

Actuator Shown In Pos. 1

PC MOUNTING

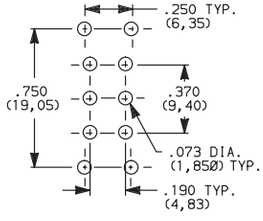

OPTION CODE	DIM 'A'
V21	.555 (14, 10)
V6	.460 (11, 68)
V7	.630 (16, 00)
V8	.953 (24, 21)

NOTE: Available actuators, see pages G-27 thru G-29.

V7, V8 VERTICAL MOUNT, V-BRACKET

V21 VERTICAL MOUNT, V-BRACKET, SNAP-IN

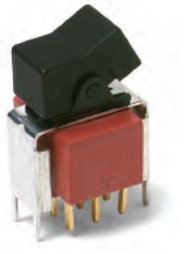

E301J1__BE2

3PT

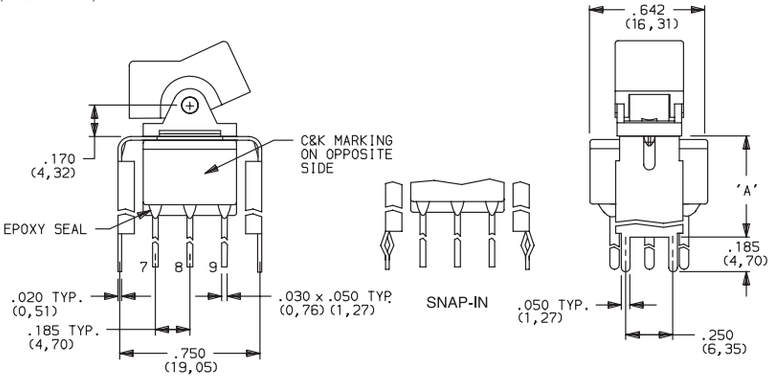

Actuator Shown In Pos. 1

PC MOUNTING

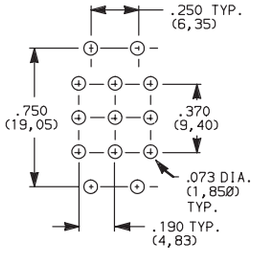

OPTION CODE	DIM 'A'
V21	.555 (14, 10)
V7	.630 (16, 00)
V8	.953 (24, 21)

NOTE: Available actuators, see pages G-27 thru G-29.

Third Angle Projection

Dimensions are shown: Inches (mm)
Specifications and dimensions subject to change

TERMINATIONS

V3, V4 VERTICAL MOUNT, V-BRACKET

V31 VERTICAL MOUNT, V-BRACKET, SNAP-IN

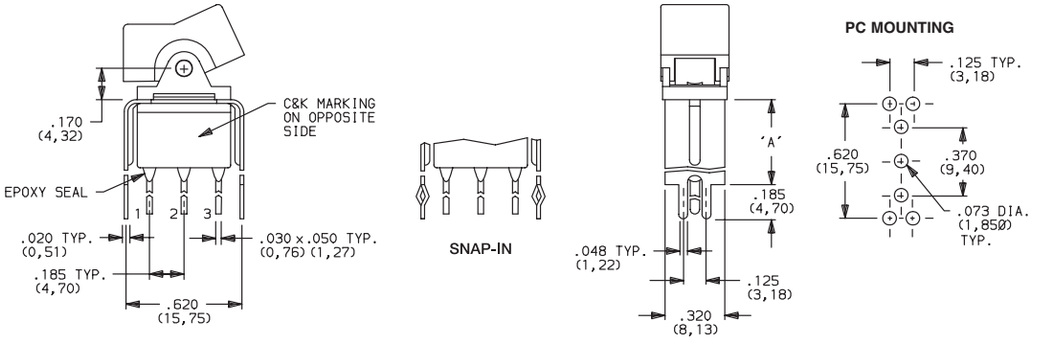

Actuator Shown In Pos. 1

E101J1__BE2
SPDT

OPTION CODE	DIM 'A'
V3, V31	.460 (11,68)
V4	.630 (16,00)

NOTE: Available actuators, see pages G-27 thru G-29.

V3, V4 VERTICAL MOUNT, V-BRACKET

V31 VERTICAL MOUNT, V-BRACKET, SNAP-IN

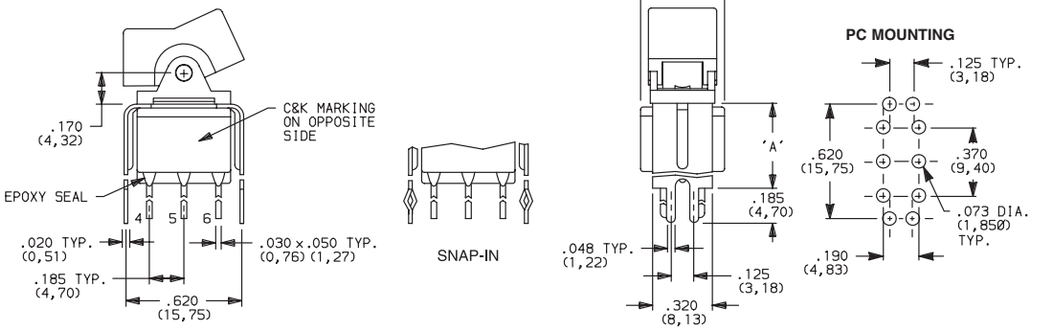

Actuator Shown In Pos. 1

E201J1__BE2
DPDT

OPTION CODE	DIM 'A'
V3, V31	.460 (11,68)
V4	.630 (16,00)

NOTE: Available actuators, see pages G-27 thru G-29.

V4 VERTICAL MOUNT, V-BRACKET

VERTICAL MOUNT, V-BRACKET, SNAP-IN

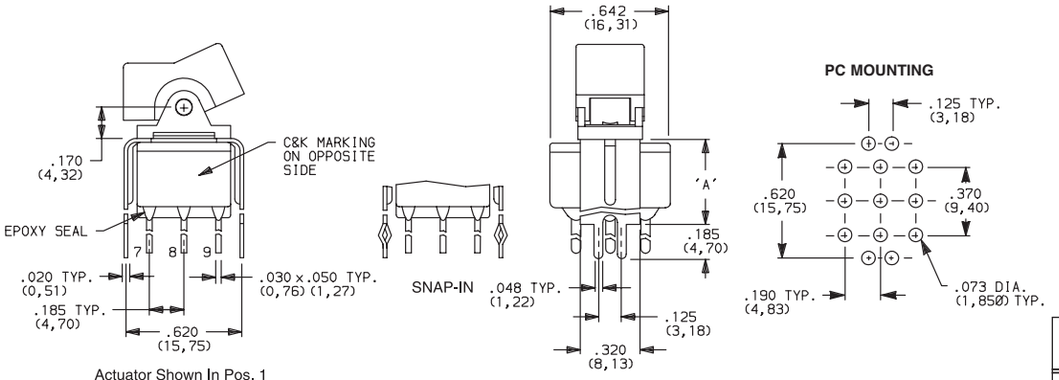

Actuator Shown In Pos. 1

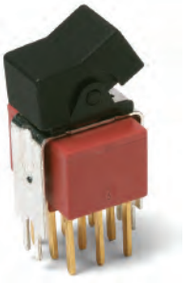

E301J1__BE2
3PDT

OPTION CODE	DIM 'A'
V41	.630 (16,00)

NOTE: Available actuators, see pages G-27 thru G-29.

Third Angle Projection

Dimensions are shown: Inches (mm)
Specifications and dimensions subject to change

E Series
Sealed Miniature Rocker and Lever Handle Switches

CONTACT MATERIAL

OPTION CODE	CONTACT MATERIAL	TERMINAL PLATING	RATINGS	
B	GOLD [1]	GOLD [1]	LOW LEVEL/ DRY CIRCUIT	0.4 VA MAX. @ 20 V AC OR DC MAX.
P		MATTE-TIN [7]		
Q	SILVER [4,5]	SILVER [5]	POWER	E1XX & E2XX MODELS: 7.5 AMPS @125 V AC OR 28 V DC; 3 AMPS @250 V AC. E3XX MODELS: 5 AMPS @ 125 V AC OR 28 V DC; 2 AMPS @ 250 V AC.
S		MATTE-TIN [6]		
G	GOLD OVER SILVER [2,3]	GOLD [3]	LOW LEVEL/DRY CIRCUIT OR POWER	E1XX AND E2XX MODELS: 0.4 VA MAX @20 V AC OR DC MAX. OR 7.5 AMPS @125 V AC OR 28 V DC; 3 AMPS @ 250 V AC. DC E3XX MODELS: 0.4 VA MAX. @ 20 V AC OR DC MAX. OR 5 AMPS @ 125 V AC OR 28 V DC; 2 AMPS @ 250 V AC.
R		MATTE-TIN [6]		

* Note: See Technical Data section of this catalog for RoHS compliant and compatible definitions and specifications.

[1] CONTACTS & TERMINALS: Copper alloy, with gold plate over nickel plate.

[2] END CONTACTS: Coin silver, with gold plate over nickel plate.

[3] CENTER CONTACTS & ALL TERMINALS: Copper alloy, with gold plate over nickel plate.

[4] END CONTACTS: Coin silver, silver plated.

[5] CENTER CONTACT & ALL TERMINALS: Copper alloy, with gold flash over silver plate. Or copper alloy, silver plated.

[6] TERMINALS: Copper alloy, with matte-tin over nickel plate.

NOTE: Any models supplied with Q, B, G, S P & R contact material are RoHS compliant.

All models with all options when ordered with G, Q, S & R contact material.

B contact material standard with all terminations.

P R & S contact materials not available with Z terminations.

SEAL

E EPOXY SEAL

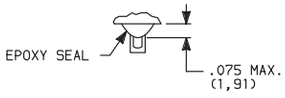

AVAILABLE HARDWARE

J2, J21 Actuators

PART NO.
760502263 **BLACK**
760503000 **RED**

Material: Nylon
Finish: Matte

J3 Actuator

PART NO.
766602263 **BLACK**
766603000 **RED**

Material: Nylon
Finish: Matte

J1, J11 Actuators

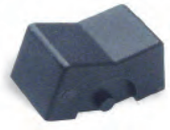

PART NO.
776A02263 **BLACK**
776A03000 **RED**

Material: Nylon
Finish: Matte

J50 Actuator

PART NO.
775A02263 **BLACK**
775A03000 **RED**

Material: Nylon
Finish: Matte

J60 Actuator

PART NO.
613802263 **BLACK**
598103000 **RED**

Material: Nylon
Finish: Matte

J90 Actuator

PART NO.
598002263 **BLACK**
598003000 **RED**

Material: Nylon
Finish: Matte

NOTE: Additional nuts, screws and lockwashers available separately, see Technical Data section of this catalog.
Other colors available, consult Customer Service Center.

Third Angle Projection

Dimensions are shown: Inches (mm)
Specifications and dimensions subject to change

AVAILABLE HARDWARE

Fits Z3 Termination female connector

PART NO.
530100000

Available in loose pieces.

Frame for J11, J21 Actuators

PART NO.
764500746 **BLACK ENAMEL**
764601106 **RETAINING SPRING**

Material: Spring Steel

J50, J60 & J90 Actuators

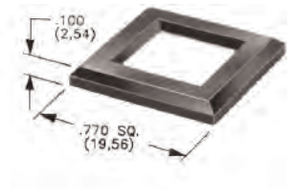

MATTE	GLOSS	
PART NO.	PART NO.	
486702000	486802000	BLACK

Material: Nylon
Finish: Matte or Gloss

NOTE: Additional nuts, screws and lockwashers available separately, see Technical Data section of this catalog. Other colors available, consult Customer Service Center.

Frames snap into panel opening and are independent from switch mounting. Accurate positioning of the PC mounted switch relative to the panel opening is necessary to provide proper clearance between actuator and frame. Available in two basic styles and four panel thicknesses .047-.125 in. Material: Nylon. Finish: Matte.

TYPICAL APPLICATION

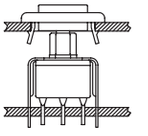

J1 & J2 Actuators

.047" (1,19) PANEL THK.	.062" (1,57) PANEL THK.	.090" (2,29) PANEL THK.	.125" (3,18) PANEL THK.	
PART NO.	PART NO.	PART NO.	PART NO.	
452902263	452702263	452802263	452602263	BLACK
452903000	452703000	452803000	452603000	RED

J50, J60 & J90 Actuators

.047" (1,19) PANEL THK.	.062" (1,57) PANEL THK.	.090" (2,29) PANEL THK.	.125" (3,18) PANEL THK.	
PART NO.	PART NO.	PART NO.	PART NO.	
432502263	432602263	432702263	432802263	BLACK
432503000	432603000	432703000	432803000	RED

PANEL MOUNTING

For part numbers
4529xxxxx, 4527xxxxx,
4528xxxxx, 4526xxxxx

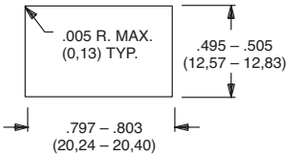

For part numbers
4325xxxxx, 4326xxxxx

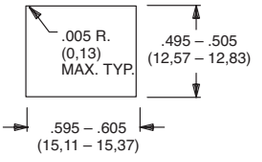

For part numbers
4327xxxxx, 4328xxxxx

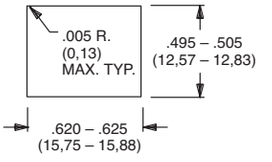

Third Angle Projection

Dimensions are shown: Inches (mm)
Specifications and dimensions subject to change

AVAILABLE HARDWARE

Panel Inserts

Will fit separate snap-in frames for J50, J60, J90 actuators.

Above frames (part nos. 432XXXXXX) are also available with insert which accepts LED for indicator light assembly. Order insert separately from frame. Blank insert panel (without hole for LED) also available. **LED not included.**

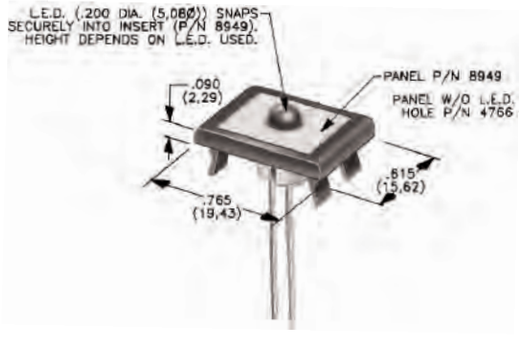

PANEL INSERT WITH HOLE FOR LED	BLANK PANEL INSERT WITHOUT HOLE FOR LED	
PART NO.	PART NO.	
894902000	476602000	BLACK
894903000	476603000	RED

NOTE: Special colors, custom markings available, consult Customer Service Center.

Third Angle Projection

Dimensions are shown: Inches (mm)
Specifications and dimensions subject to change

ET Series
Sealed Subminiature Rocker Switches

Features/Benefits

- ***Sealed against solder and cleaning process contaminants***
- ***Rocker, bushing & case—UL 94V-0***
- ***Small footprint—saves space***
- ***RoHS compliant***

Typical Applications

- ***Telecommunications***
- ***Instrumentation***
- ***Computers & peripherals***

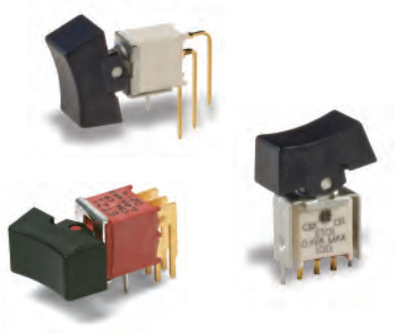

Specifications

CONTACT RATING: B contact material: 0.4 VA max. @ 20 V AC or DC max. Q contact material: Copper alloy, silver plated. See page G-43 for additional ratings.

ELECTRICAL LIFE: ETX1 models: 60,000 make-and-break cycles at full load. All other models: 30,000 cycles.

CONTACT RESISTANCE: Below 20 m Ω typ. initial @ 2-4 V DC, 100 mA, for both silver and gold plated contacts.

INSULATION RESISTANCE: 10^9 Ω min.

DIELECTRIC STRENGTH: 1000 Vrms min. @ sea level.

OPERATING TEMPERATURE: –30ºC to 85ºC.

SOLDERABILITY: Per MIL-STD-202F method 208D, or EIA RS-186E method 9 (1 hour steam aging).

PACKAGING: Surface mount switches standard in tape and reel packaging, see page G-45 for drawings and reel information.

Materials

CASE & BUSHING: Glass filled nylon 6/6, flame retardant, heat stabilized (UL 94V-0) or glass filled 4/6 nylon, flame retardant, heat stabilized (UL 94V-0).

ACTUATOR: Nylon, black standard. Internal o-ring seal standard with all actuators. SA surface mount: High temperature material, glass filled 46 nylon, flame retardant, heat stabilized (UL 94V-0).

SWITCH SUPPORT: Brass, matte-tin plated.

CONTACTS & TERMINALS: B contact material: Copper alloy, with gold plate over nickel plate. Q contact material: Copper alloy, silver plated. See page G-43 for additional contact materials.

TERMINAL SEAL: Epoxy.

NOTE: Any models supplied with Q, B, G, S, P & R contact material are RoHS compliant.

NOTE: Specifications and materials listed above are for switches with standard options. For information on specific and custom switches, consult Customer Service Center.

Build-A-Switch

To order, simply select desired option from each category and place in the appropriate box. Available options are shown and described on pages G-40 thru G-44. For additional options not shown in catalog, consult Customer Service Center. All models are process sealed to withstand machine soldering temperatures and pressure wash cleaning methods.

Switch Function
- **ET01** SP On-None-On
- **ET02** SP Off-None-On
- **ET03** SP On-Off-On
- **ET05** SP Mom.-Off-Mom.
- **ET07** SP On-Off-Mom.
- **ET08** SP On-None-Mom.
- **ET21** DP On-None-On
- **ET27** DP On-Off-Mom.
- **ET28** DP On-None-Mom.

Actuator
- **J1** Rocker
- **J6** Rocker

Terminations
- **A** Right angle, PC thru-hole
- **AV** Vertical Right angle, PC thru-hole
- **C** PC Thru-hole
- **V3** V-bracket
- **AV2** Vertical Right angle, PC thru-hole
- **SA** Right Angle Surface mount

Contact Material
- **B** Gold
- **P** Gold, matte tin
- **Q** Silver
- **S** Silver, matte-tin
- **G** Gold over silver
- **R** Gold over silver, matte-tin

Seal
- **E** Epoxy

Actuator Color
- **2** Black
- **1** White
- **3** Red

Dimensions are shown: Inches (mm)
Specifications and dimensions subject to change

ET Series
Sealed Subminiature Rocker Switches

SWITCH FUNCTION

NO. POLES	MODEL NO.	SWITCH FUNCTION POS. 1	SWITCH FUNCTION POS. 2	SWITCH FUNCTION POS. 3	CONNECTED TERMINALS POS. 1	CONNECTED TERMINALS POS. 2	CONNECTED TERMINALS POS. 3	SCHEMATIC
SP	ET01	ON	NONE	ON	2-3	N/A	2-1	SPDT
	ET03	ON	OFF	ON		OPEN		
	ET05	MOM.	OFF	MOM.				
	ET07	ON	OFF	MOM.				
	ET08	ON	NONE	MOM.		N/A		
	ET02	OFF	NONE	ON	OPEN	N/A	3-1	SPST
DP	ET21	ON	NONE	ON	2-3,5-6	N/A	2-1,5-4	DPDT
	ET27	ON	OFF	MOM.		OPEN		
	ET28	ON	NONE	MOM.		N/A		

SPDT

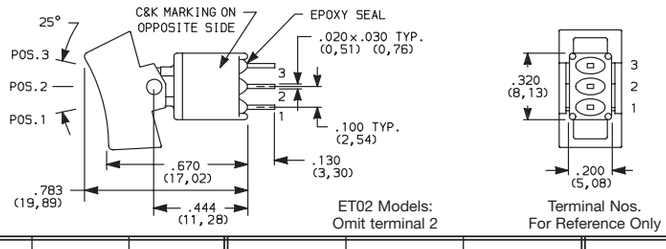

ET02 Models: Omit terminal 2

Terminal Nos. For Reference Only

Part number shown: ET01J6CBE2

DPDT

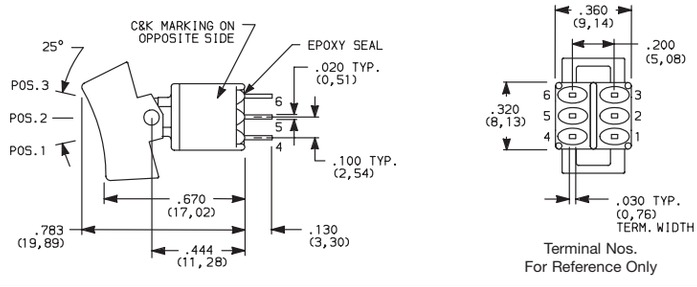

Terminal Nos. For Reference Only

Part number shown: ET21J6CBE2

MOM. = Momentary

All models c UL us with all options when ordered with G, S, R or Q contact material.

Third Angle Projection

Dimensions are shown: Inches (mm)
Specifications and dimensions subject to change

ACTUATOR

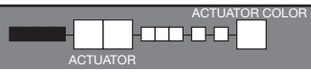

J1 ROCKER

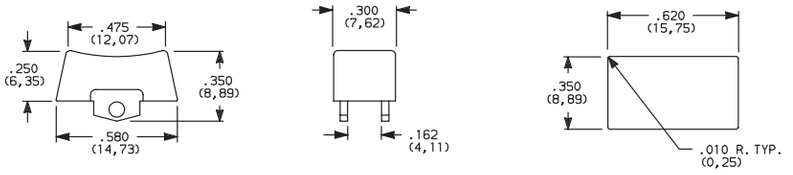

Available with all models except ET0X with A & SA & SA1 terminations.

J6 ROCKER

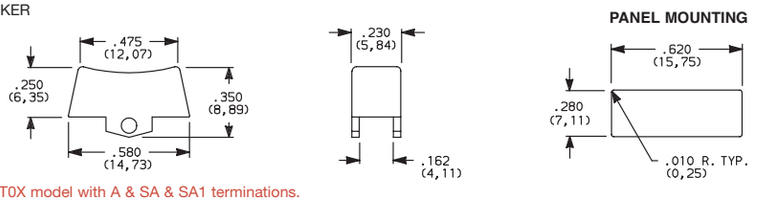

Standard with ET0X model with A & SA & SA1 terminations.

OPTION CODE	ACTUATOR COLOR
2	BLACK
1	WHITE
3	RED

Actuators available separately, see page G-45. Finish: Matte. Other colors, custom actuator markings and legends available, consult Customer Service Center.

NOTE: Internal o-ring actuator seal standard.

TERMINATIONS

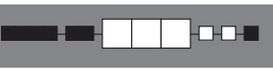

C PC THRU-HOLE

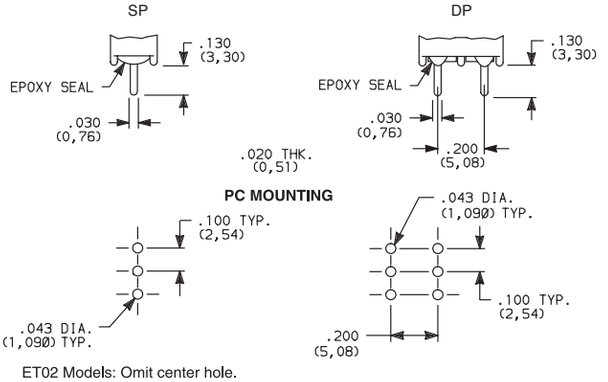

ET02 Models: Omit center hole.

SP & DP

A RIGHT ANGLE, PC THRU-HOLE

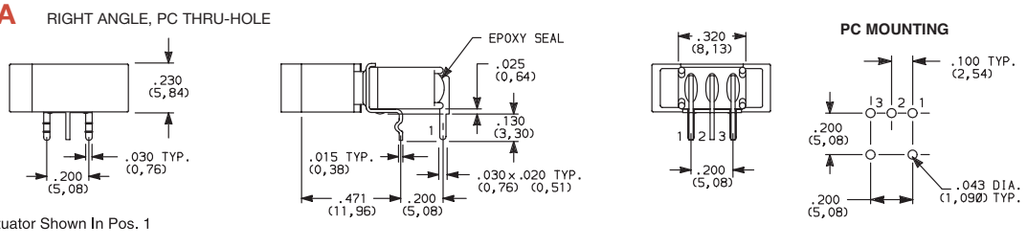

Actuator Shown In Pos. 1

Not available with ET02 model.
J6 actuator std. only on ET0X models with A terminations.

ET01J6ABE2
Horizontal Actuation
SPDT

A RIGHT ANGLE, PC THRU-HOLE

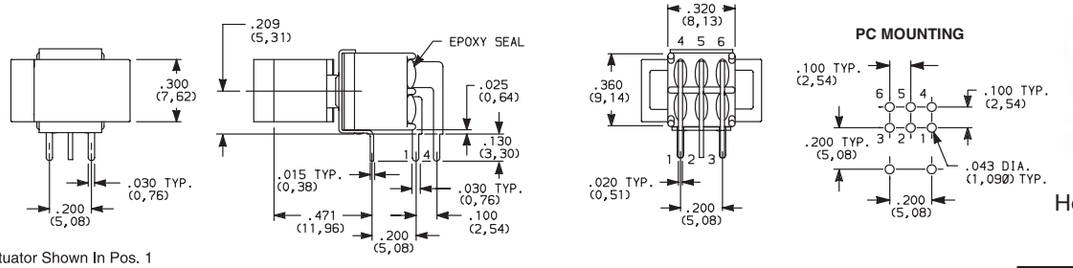

Actuator Shown In Pos. 1

ET21J1ABE2
Horizontal Actuation
DPDT

Third Angle Projection

Dimensions are shown: Inches (mm)
Specifications and dimensions subject to change

ET Series
Sealed Subminiature Rocker Switches

TERMINATIONS

AV VERTICAL RIGHT ANGLE, PC THRU-HOLE

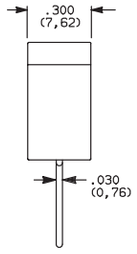

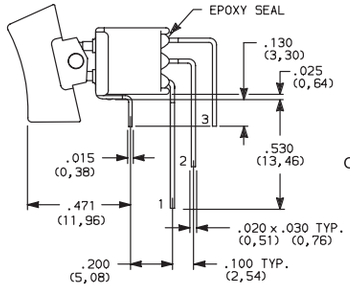

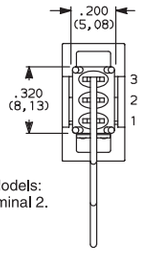

ET02 Models:
Omit terminal 2.

PC MOUNTING

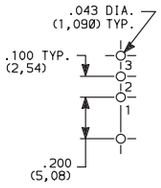

ET01J1AVBE2
Vertical Actuation
SPDT

Actuator Shown In Pos. 1

NOTE: Terminal bend radii and lead-in manufacturing option.

AV VERTICAL RIGHT ANGLE, PC THRU-HOLE

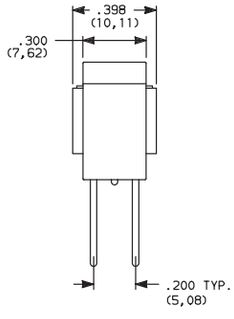

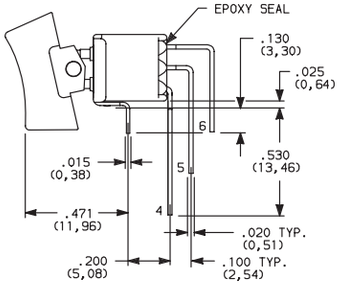

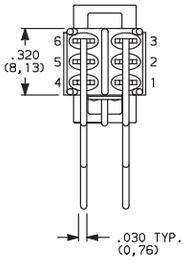

PC MOUNTING

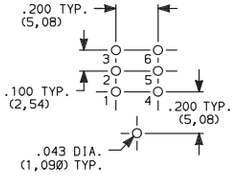

ET21J1AVBE2
Vertical Actuation
DPDT

Actuator Shown In Pos. 1

NOTE: Terminal bend radii and lead-in manufacturing option.

AV2 VERTICAL RIGHT ANGLE, PC THRU-HOLE

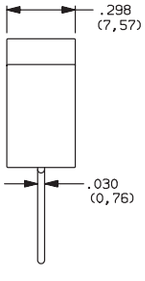

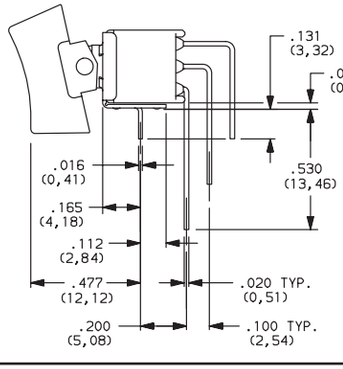

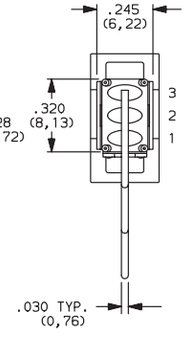

PC MOUNTING

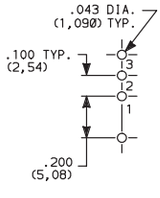

ET01J1AV2BE2
Vertical Actuation
SPDT

Third Angle Projection

Dimensions are shown: Inches (mm)
Specifications and dimensions subject to change

TERMINATIONS

SA RIGHT ANGLE, SURFACE MOUNT

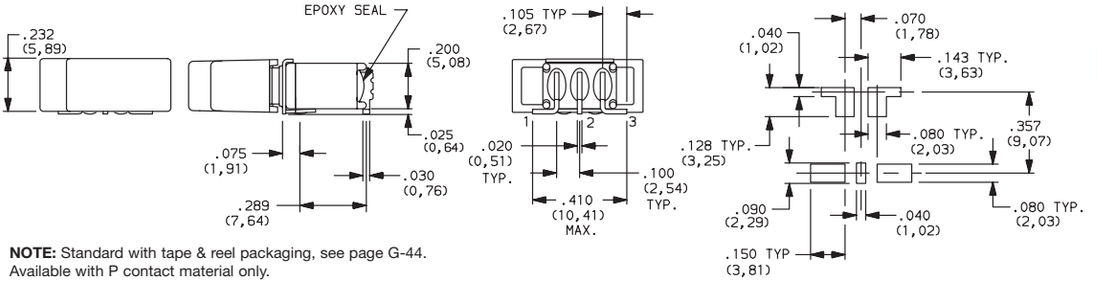

ET01J6SAPE2
Horizontal Actuation
SPDT

NOTE: Standard with tape & reel packaging, see page G-44.
Available with P contact material only.

V3 VERTICAL MOUNT, V-BRACKET

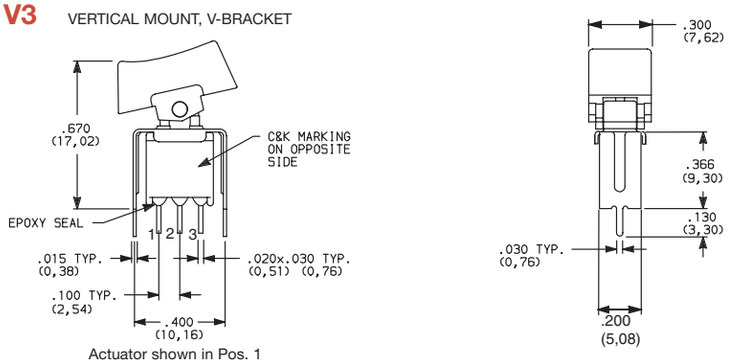

Actuator shown in Pos. 1

ET01J1V3BE2
SPDT

V3 VERTICAL MOUNT, V-BRACKET

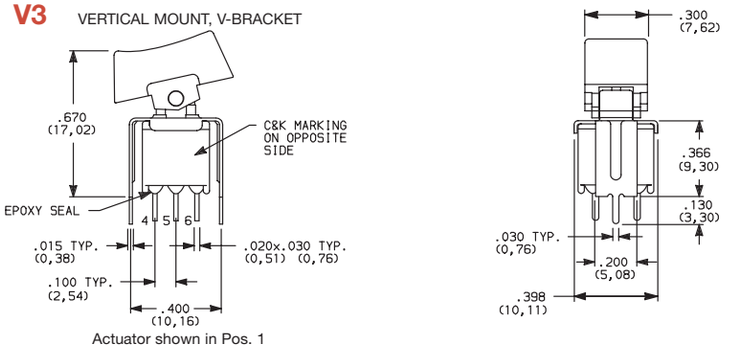

Actuator shown in Pos. 1

ET21J1V3BE2
DPDT

CONTACT MATERIAL

OPTION CODE	CONTACT MATERIAL	TERMINAL PLATING	RATINGS	
B	GOLD [1]	GOLD [1]	LOW LEVEL/ DRY CIRCUIT	0.4 VA MAX. @ 20 V AC OR DC MAX.
P		MATTE-TIN [6]		
Q	SILVER [4,5]	SILVER [5]	POWER	ETX1 MODELS: 3 AMPS @ 120 V AC OR 28 V DC. ALL OTHER MODELS: 2 AMPS @ 120 V AC OR 28 V DC.
S		MATTE-TIN [6]		
G	GOLD OVER SILVER [2,3]	GOLD [3]	LOW LEVEL/DRY CIRCUIT OR POWER	ETX1 MODELS: 0.4 VA MAX @ 20 V AC OR DC MAX. OR 3 AMPS @120 V AC OR 28 V DC. ALL OTHER MODELS: 0.4 VA MAX @ 20 V AC OR DC MAX. OR 2 AMPS @ 120 V AC OR 28 V DC.
R		MATTE-TIN [6]		

* Note: See Technical Data section of this catalog for RoHS compliant and compatible definitions and specifications.

[1] CONTACTS & TERMINALS: Copper alloy, with gold plate over nickel plate.
[2] END CONTACTS: Coin silver, with gold plate over nickel plate.
[3] CENTER CONTACTS & ALL TERMINALS: Copper alloy, with gold plate over nickel plate.
[4] END CONTACTS: Coin silver, silver plated.
[5] CENTER CONTACT & ALL TERMINALS: Copper alloy, silver plated.
[6] TERMINALS: Copper alloy, with matte-tin over nickel plate.

NOTE: Any models supplied with Q, B, G, S, P & R contact material are RoHS compliant.

All models c UL us with all options when ordered with G, Q, S & R contact material.

Third Angle Projection

Dimensions are shown: Inches (mm)
Specifications and dimensions subject to change

ET Series
Sealed Subminiature Rocker Switches

SEAL

E EPOXY SEAL

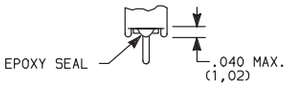

AVAILABLE HARDWARE

J1 Actuator

PART NO.

261A01000 WHITE
261A02263 BLACK
261A03000 RED

Material: Nylon
Finish: Matte

NOT AVAILABLE WITH A, SA, SA1

J6 Actuator

PART NO.

621C01000 WHITE
621C02263 BLACK
621C03000 RED

Material: Nylon
Finish: Matte
For Hi Temp, Consult Factory

NOTE: Other colors available, consult Customer Service Center.

TAPE & REEL SA TERMINATION

ET01J6SABE (SHOWN)

REEL INFORMATION	
OUTSIDE DIAMETER	13.00 (330,0)
PILOT HOLE	.512 (13,0)
QUANTITY PER REEL	500

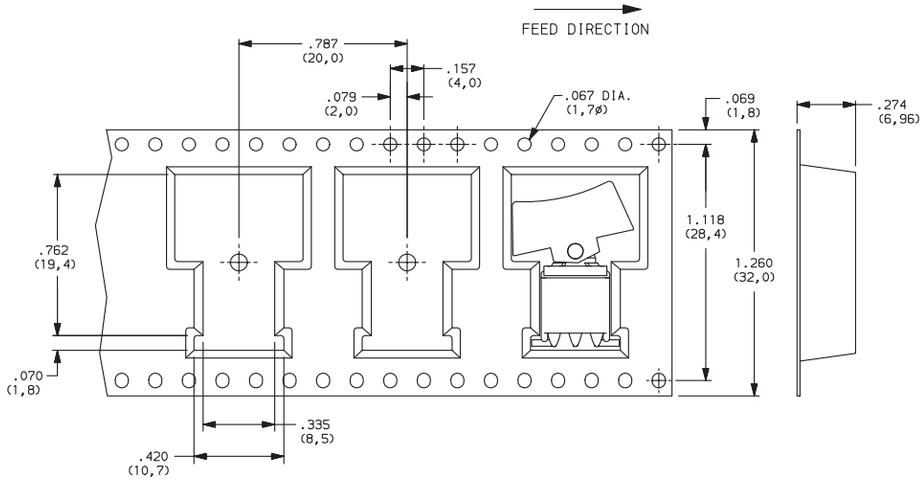

ET01J6SA1BE (SHOWN)

REEL INFORMATION	
OUTSIDE DIAMETER	13.00 (330,0)
PILOT HOLE	.795 (20,20)
QUANTITY PER REEL	450

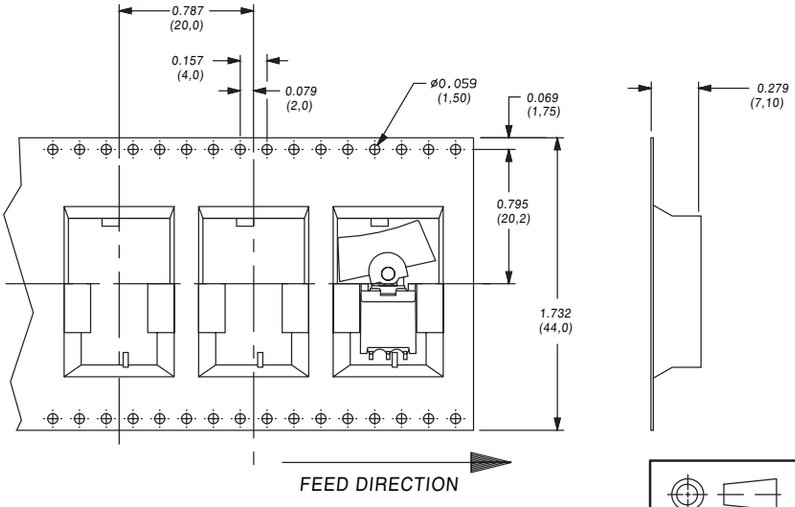

Third Angle Projection

Dimensions are shown: Inches (mm)
Specifications and dimensions subject to change

T Series
Subminiature Rocker Switches

Features/Benefits

- ***Compact size—small footprint***
- ***Single and double pole models***
- ***PC and panel mounting options available***
- ***RoHS compliant***

Typical Applications

- ***Telecommunications***
- ***Instrumentation***
- ***Medical Equipment***

Models Available

Specifications

CONTACT RATING: Q contact material (TX01 models): 3 AMPS @ 120 V AC or 28 V DC. All other models: 2 AMPS @ 120 V AC or 28 V DC. See page G-49 for additional ratings.

ELECTRICAL LIFE: TX01 models: 60,000 make-and-break cycles at full load. All other models: 30,000 cycles.

CONTACT RESISTANCE: Below 20 m Ω typ. initial @ 2–4 V DC, 100 mA, for both silver and gold plated contacts.

INSULATION RESISTANCE: 10^9 Ω min.

DIELECTRIC STRENGTH: 1000 Vrms min. @ sea level.

OPERATING TEMPERATURE: –30°C to 85°C.

SOLDERABILITY: Per MIL-STD-202F method 208D, or EIA RS-186E method 9 (1 hour steam aging).

NOTE: Any models supplied with B, G, P, Q or R contact material are RoHS compliant.

NOTE: Specifications and materials listed above are for switches with standard options. For information on specific and custom switches, consult Customer Service Center.

Materials

CASE: Glass filled nylon 6/6, flame retardant, heat stabilized or diallyl phthalate (DAP), (UL 94V-0) or glass filled nylon 4/6, flame retardant, heat stabilized.

ACTUATOR: Nylon, black standard.

BUSHING: Brass, nickel plated.

HOUSING: Stainless steel.

SWITCH SUPPORT: Brass, matte-tin plated.

MOUNTING BRACKET: Stainless steel.

END CONTACTS: B contact material: Copper alloy, with gold plate over nickel plate. Q contact material: Coin silver, silver plated. See page G-49 for additional contact materials.

CENTER CONTACTS & TERMINALS: B contact material: Copper alloy, with gold plate over nickel plate. Q contact material: Copper alloy, silver plated. See page G-49 for additional contact materials.

TERMINAL SEAL: Epoxy.

HARDWARE: Nut, Screws & Lockwasher: Stainless steel. Standoff: Nylon standard.

Build-A-Switch

To order, simply select desired option from each category and place in the appropriate box. Available options are shown and described on pages G-46 through G-50. For additional options not shown in catalog, consult Customer Service Center. All models have epoxy terminal seal and are compatible with all "bottom-wash" PCB cleaning methods.

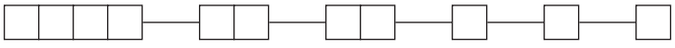

Switch Function
- **T101** SP On-None-On
- **T102** SP Off-None-On
- **T103** SP On-Off-On
- **T105** SP Mom.-Off-Mom.
- **T107** SP On-Off-Mom.
- **T201** DP On-None-On
- **T205** DP Mom.-Off-Mom.

Actuator
- **J1** Rocker, .300" wide
- **J6** Rocker, .230" wide

Terminations
- **A** Right angle, PC thru-hole
- **AV** Vertical Right angle, PC thru-hole
- **Z** Solder lug
- **V3** V-bracket

Contact Material
- **B** Gold
- **P** Gold, matte-tin
- **Q** Silver
- **G** Gold over silver
- **R** Gold over silver, matte-tin

Seal
- **E** Epoxy

Actuator Color
- **2** Black

Dimensions are shown: Inches (mm)
Specifications and dimensions subject to change

T Series
Subminiature Rocker Switches

SWITCH FUNCTION

ACTUATOR COLOR

NO. POLES	MODEL NO.	SWITCH FUNCTION POS. 1	SWITCH FUNCTION POS. 2	SWITCH FUNCTION POS. 3	CONNECTED TERMINALS POS. 1	CONNECTED TERMINALS POS. 2	CONNECTED TERMINALS POS. 3	SCHEMATIC
		C&K marking on opposite side			C&K marking on opposite side			
SP	T101	ON	NONE	ON	2-3	N/A	2-1	SPDT
	T103	ON	OFF	ON		OPEN		
	T105	MOM.	OFF	MOM.				
	T107	ON	OFF	MOM.				
	T102	OFF	NONE	ON	OPEN	N/A	3-1	SPST

SPDT

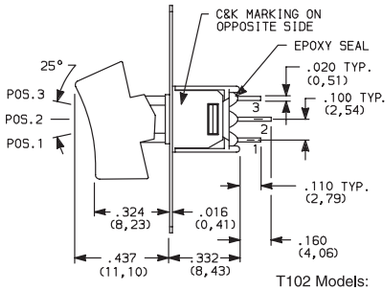

T102 Models: Omit terminal 2

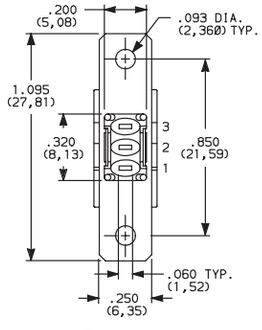

Terminal Nos. For Reference Only

PANEL MOUNTING

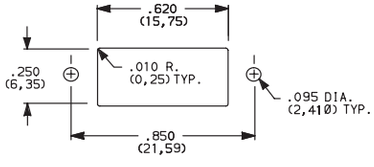

Part number shown: T101J6ZBE2

NO. POLES	MODEL NO.	POS. 1	POS. 2	POS. 3	POS. 1	POS. 2	POS. 3	SCHEMATIC
DP	T201	ON	NONE	ON	2-3,5-6	N/A	2-1,5-4	DPDT
	T205	MOM.	OFF	MOM.		OPEN		

DPDT

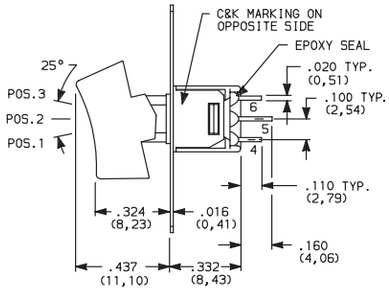

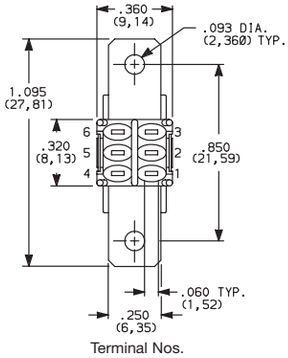

Terminal Nos. For Reference Only

PANEL MOUNTING

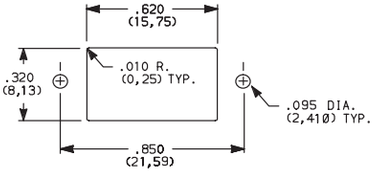

Part number shown: T201J1ZBE2

MOM. = Momentary

All models ® with all options when ordered with G, Q or R contact material.

Rocker

G

Third Angle Projection

Dimensions are shown: Inches (mm)
Specifications and dimensions subject to change

ACTUATOR

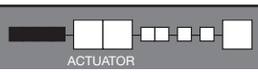

J1 ROCKER, .300 WIDE

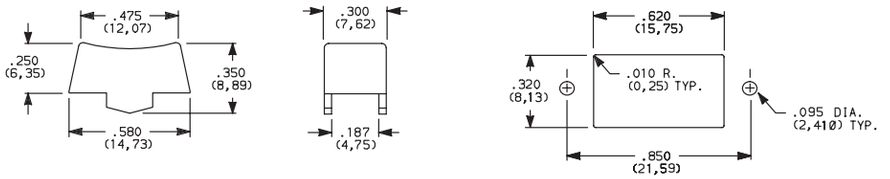

Standard with all models except T10X with A terminations.

J6 ROCKER, .230 WIDE

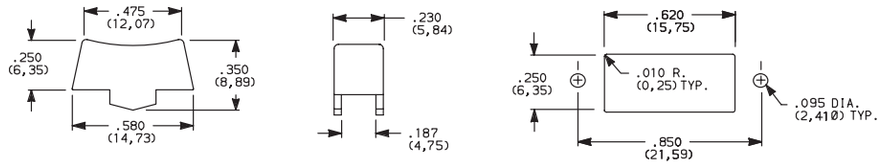

Standard with T10X model with A terminations.

OPTION CODE	ACTUATOR COLOR
2	BLACK

Actuators available separately, see page G 50. Finish: Matte. Other colors, custom actuator markings and legends available, consult Customer Service Center.

TERMINATIONS

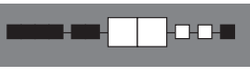

Z SOLDER LUG

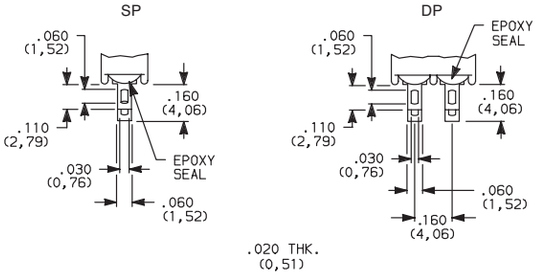

SP and DP

Not available with P or R contact material.

A RIGHT ANGLE, PC THRU-HOLE

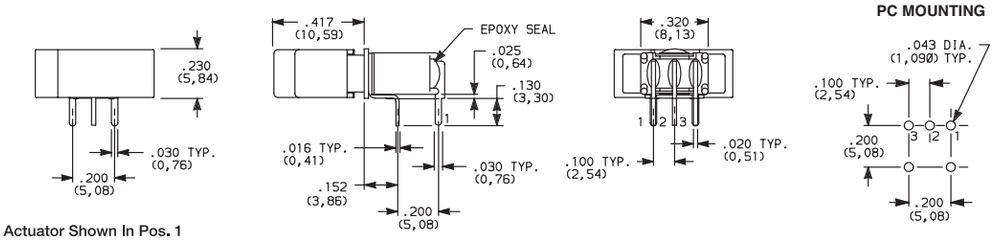

Actuator Shown In Pos. 1

T101J6ABE2
Horizontal Actuation
SPDT

Not available with T102 model. J6 actuator standard only on T10X models with A terminations.

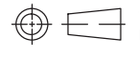

Dimensions are shown: Inches (mm)
Specifications and dimensions subject to change

TERMINATIONS

A RIGHT ANGLE, PC THRU-HOLE

T201J1ABE2
Horizontal Actuation
DPDT

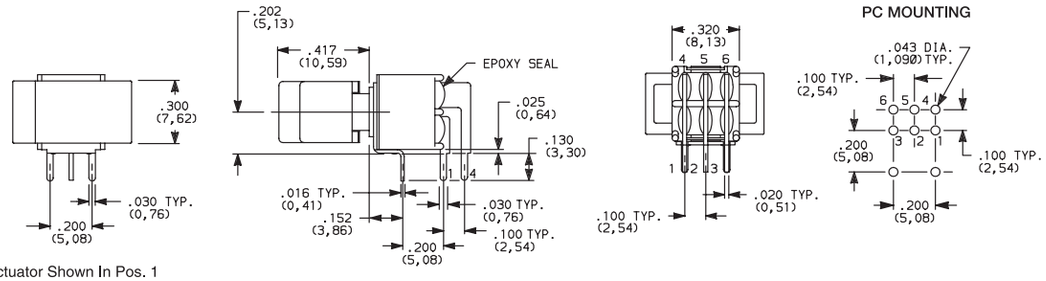

Actuator Shown In Pos. 1

AV VERTICAL RIGHT ANGLE, PC THRU-HOLE

T101J1AVBE2
Vertical Actuation
SPDT

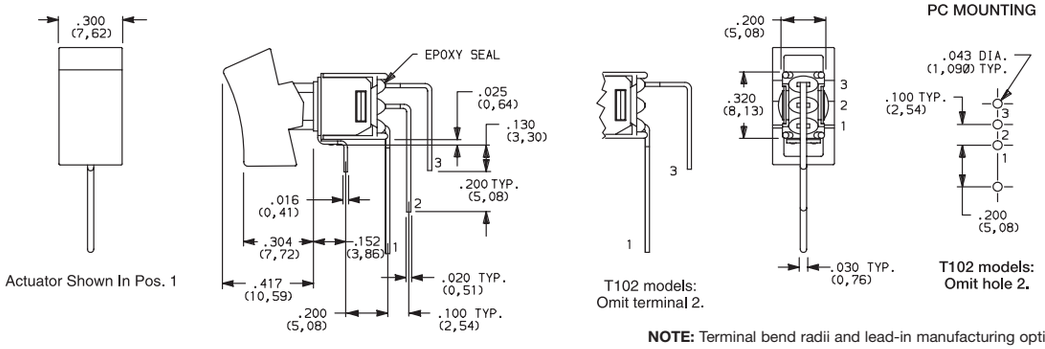

Actuator Shown In Pos. 1

T102 models:
Omit terminal 2.

T102 models:
Omit hole 2.

NOTE: Terminal bend radii and lead-in manufacturing option.

AV VERTICAL RIGHT ANGLE, PC THRU-HOLE

T201J1AVBE2
Vertical Actuation
DPDT

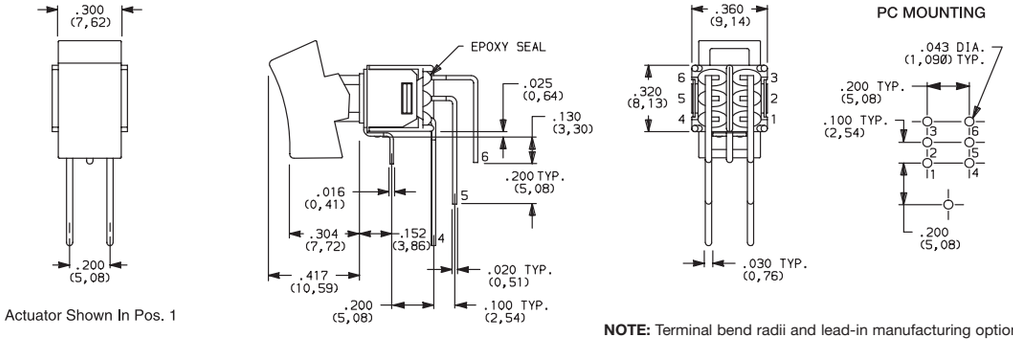

Actuator Shown In Pos. 1

NOTE: Terminal bend radii and lead-in manufacturing option.

V3 VERTICAL MOUNT, V-BRACKET

T101J1V3BE2
SPDT

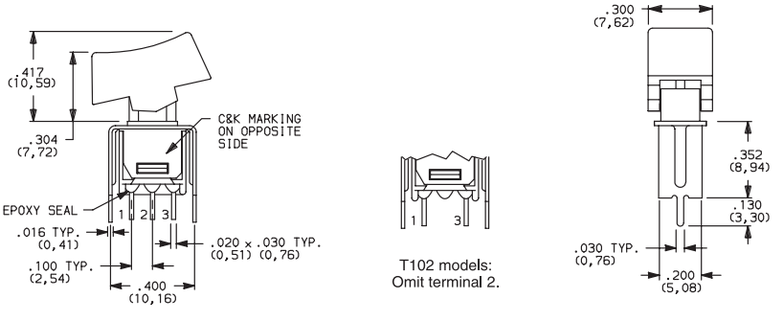

Actuator Shown In Pos. 1

T102 models:
Omit terminal 2.

T102 models:
Omit center hole.

Third Angle Projection

Dimensions are shown: Inches (mm)
Specifications and dimensions subject to change

TERMINATIONS

V3 VERTICAL MOUNT, V-BRACKET

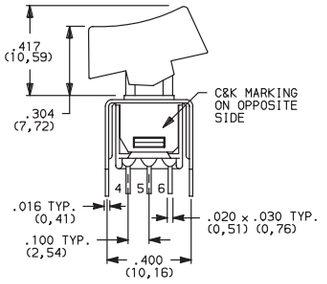

Actuator Shown In Pos. 1

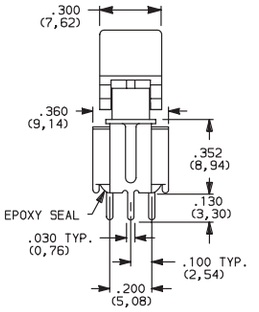

PC MOUNTING

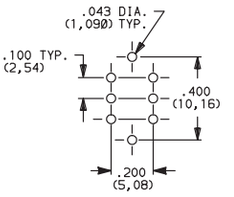

T201J1V3BE2
DPDT

CONTACT MATERIAL

OPTION CODE	CONTACT MATERIAL	TERMINAL PLATING	RATINGS	
B	GOLD [3]	GOLD [1]	LOW LEVEL/ DRY CIRCUIT	0.4 VA MAX. @ 20 V AC OR DC MAX.
P		MATTE-TIN [6]		
Q	SILVER [4,5]	SILVER [5]	POWER	TX01 MODELS: 3 AMPS @ 120 V AC OR 28 V DC. ALL OTHER MODELS: 2 AMPS @ 120 V AC OR 28 V DC.
G	GOLD OVER SILVER [2,3]	GOLD [3]	LOW LEVEL/DRY CIRCUIT OR POWER	TX01 MODELS: 0.4 VA MAX @ 20 V AC OR DC MAX. OR 3 AMPS @ 120 V AC OR 28 V DC. ALL OTHER MODELS: 0.4 VA MAX @ 20 V AC OR DC MAX. OR 2 AMPS @ 120 V AC OR 28 V DC.
R		MATTE-TIN [6]		

* Note: See Technical Data section of this catalog for RoHS compliant and compatible definitions and specifications.

[1] CONTACTS & TERMINALS: Copper alloy, with gold plate over nickel plate.
[2] END CONTACTS: Coin silver, with gold plate over nickel plate.
[3] CENTER CONTACTS & ALL TERMINALS: Copper alloy, with gold plate over nickel plate.
[4] END CONTACTS: Coin silver, silver plated.
[5] CENTER CONTACT & ALL TERMINALS: Copper alloy, silver plated.
[6] TERMINALS: Copper alloy, with matte-tin over nickel plate.

NOTE: Any models supplied with B, G, P, Q & R contact material are RoHS compliant.

All models ® with all options when ordered with G, Q, or R contact material.

B contact material standard with A, AV, V3 terminations.

Q contact material standard with C & Z terminations.

P & R contact materials not available with Z terminations.

SEAL

E EPOXY SEAL

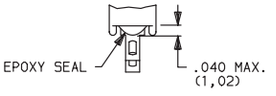

Third Angle Projection

Dimensions are shown: Inches (mm)
Specifications and dimensions subject to change

T Series
Subminiature Rocker Switches

AVAILABLE HARDWARE

Panel mounting hardware for rocker and lever handle switches is available separately. Mounting hardware consists of two screws, two nuts, two standoffs and two lockwashers per switch, and is available for panel thicknesses of 1/16, 3/32 and 1/8 inch. See part numbers below.

TYPICAL ASSEMBLY

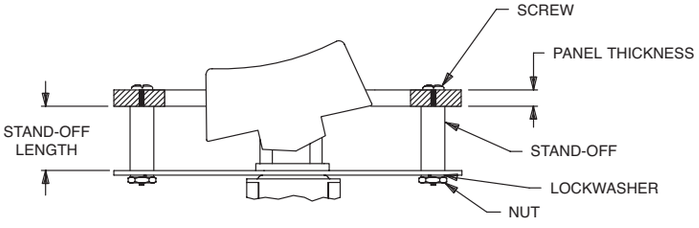

PART NO.	PANEL THK.	STANDOFF LENGTH
761101000	1/16 IN. (1,59)	.295 (7,49)
761102000	3/32 IN. (2,38)	.264 (6,71)
761103000	1/8 IN. (3,18)	.233 (5,92)

NOTE: Additional nuts, screws and lockwashers available separately, see Technical Data section of this catalog.

J1 Actuator

PART NO.
468002263 **BLACK**

Material: Nylon
Finish: Matte

J6 Actuator

PART NO.
468102263 **BLACK**

Material: Nylon
Finish: Matte

NOTE: Other colors, custom actuator markings and legends available, consult Customer Service Center.

Third Angle Projection

Dimensions are shown: Inches (mm)
Specifications and dimensions subject to change

9000 Series
Power Rocker and Lever Handle Switches

Features/Benefits

- ***Thermoset UL 94V-0 housing***
- ***Rugged construction***
- ***Variety of actuator and termination options***
- ***RoHS compliant***

Typical Applications

- ***Small equipment***
- ***Shut-off switch***

UL 61058-1

Specifications

CONTACT RATING:

9201 Model:

GP (general purpose)
6 AMPS 125 VAC 50/60 Hz T85 10,000 cycles (10E3)
3 AMPS 250 VAC 50/60 Hz T85 10,000 cycles
R (resistive)
6 AMPS 30 VDC T85 10,000 cycles

9221 Model:

GP (general purpose)
10 AMPS 125 VAC 50/60 Hz T85 10,000 cycles
5 AMPS 250 VAC 50/60 Hz T85 10,000 cycles
R (resistive)
10 AMPS 30 VDC T85 10,000 cycles

ELECTRICAL LIFE: 25,000 make-and-break cycles at full load.

CONTACT RESISTANCE: Below 10 m Ω typ. initial @ 2–4 V DC, 100 mA.

INSULATION RESISTANCE: 10^9 Ω min.

DIELECTRIC STRENGTH: 2,500 Vrms min. @ sea level.

OPERATING TEMPERATURE: –30°C to 85°C.

SOLDERABILITY: Per MIL-STD-202F method 208D, or EIA RS-186E method 9 (1 hour steam aging).

Materials

CASE: Diallyl phthalate (DAP) (UL 94V-0).

ACTUATOR: Nylon, black standard.

FRAME-REAR MOUNT OPTIONS: Spring steel, black.

BUSHING: Brass, nickel plated.

HOUSING: Stainless steel.

SWITCH SUPPORT: Brass or steel, matte-tin plated.

MOUNTING BRACKET: Stainless steel.

END CONTACTS: 9201 Model: Coin silver, silver plated.
9221 Model: Silver cadmium oxide.

CENTER CONTACTS: Copper alloy, silver plated

ALL TERMINALS: 9201 Model: Copper alloy, silver plated.
9221 Model: Copper alloy, matte-tin plated.

TERMINAL SEAL: Epoxy.

HARDWARE: Nut, Screw & Lockwasher: Stainless steel. Standoff: Nylon standard, aluminum available, consult Customer Service Center.

*Cadmium used in electrical contacts is acceptable for RoHS.

NOTE: Any models supplied with Q contact material are RoHS compliant.

NOTE: Specifications and materials listed above are for switches with standard options. For information on specific and custom switches, consult Customer Service Center.

Build-A-Switch

To order, simply select desired option from each category and place in the appropriate box. Available options are shown and described on pages G-52 through G-55. For additional options not shown in catalog, consult Customer Service Center.

Switch Function
9201 DP On-On, 6 Amps
9221 DP On-On, 10 Amps

Actuator
J1 Rocker
J2 Lever
J3 Rocker
J37 Rocker with metal frame

Terminations
Z Solder lug (9201 only)
AV2 Vertical right angle, PC thru-hole (9201 only)
C PC Thru-hole (9201 only)
Z4 Quick connect

Contact Material
Q Silver

Seal
E Epoxy
D No Seal

Actuator Color
2 Black
1 White
3 Red

Frame Color
2 Black
NONE No frame color required

Dimensions are shown: Inches (mm)
Specifications and dimensions subject to change

9000 Series
Power Rocker and Lever Handle Switches

SWITCH FUNCTION

NO. POLES	MODEL NO.	RATING*	SWITCH FUNCTION POS. 1	SWITCH FUNCTION POS. 2	CONNECTED TERMINALS POS. 1	CONNECTED TERMINALS POS. 2	SCHEMATIC
DP	9201	6 AMPS	ON	ON	2-3,5-6	2-1,5-4	DPDT
	9221	10 AMPS	ON	ON			

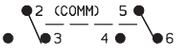

DPDT

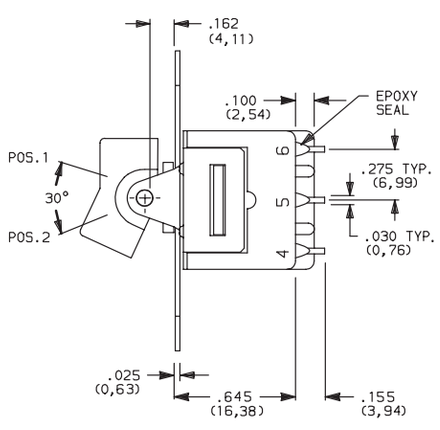

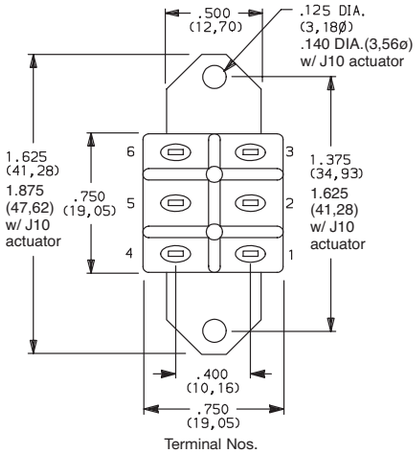

Part number shown: 9201J1ZQE2

Terminal Nos.
Molded On Side Of Case

All 9000 Series models meet international dimensional and electrical requirements.

* See CONTACT MATERIAL, page G-54, for complete ratings.

9221 model must be ordered with Z4 terminations and D seal option.

ACTUATOR–PANEL MOUNT

ACTUATOR COLOR
ACTUATOR

OPTION CODE	ACTUATOR COLOR
2	BLACK
1	WHITE
3	RED

Finish: Matte. Other colors, custom actuator markings and legends available, consult Customer Service Center.

NOTE: Hardware: two each—mounting screws, nuts, lockwashers and standoffs for 1/8 inch thick panel are supplied standard on all switches with panel mounting brackets. Actuators available separately, see page G-55. Hardware available separately, see Technical Data section of this catalog.

PANEL MOUNTING

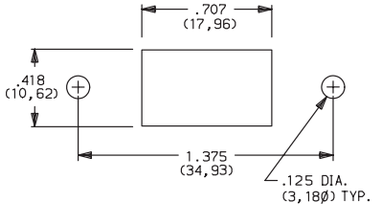

J1 ROCKER

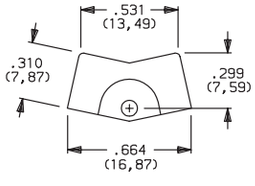

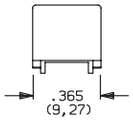

J2 LEVER

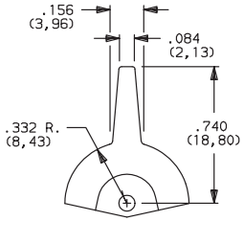

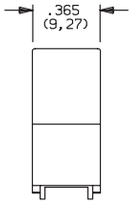

Third Angle Projection

Dimensions are shown: Inches (mm)
Specifications and dimensions subject to change

ACTUATOR–PANEL MOUNT

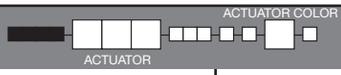

J3 ROCKER

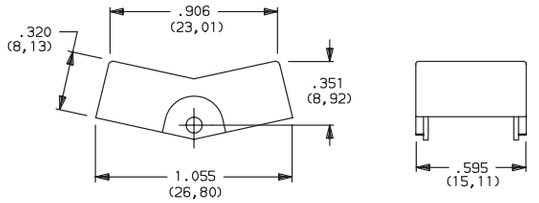

PANEL MOUNTING

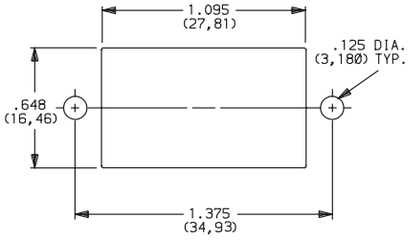

OPTION CODE	ACTUATOR COLOR
2	BLACK
1	WHITE
3	RED

Actuator finish: Matte. Other colors, custom actuator markings and legends available, consult Customer Service Center.

NOTE: Actuators available separately, see page G–55. Hardware: two each—mounting screws, nuts, lockwashers and standoffs for 1/8 inch thick panel are supplied standard on all switches with panel mounting brackets. Hardware available separately, see Technical Data section of this catalog.

ACTUATOR–REAR MOUNT

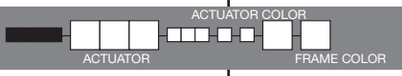

J37 ROCKER WITH METAL FRAME

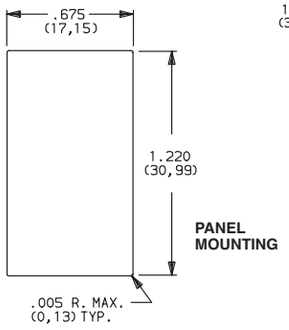

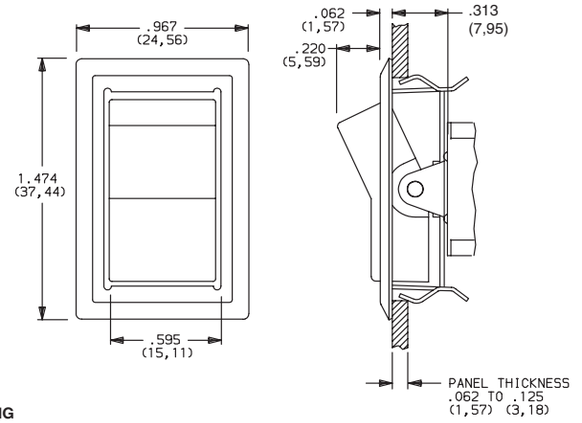

Not available with AV2 termination.

OPTION CODE	ACTUATOR COLOR
2	BLACK
1	WHITE
3	RED

OPTION CODE	FRAME COLOR
2	BLACK

Actuator finish: Matte. Frame finish: Gloss. Other colors, custom actuator markings and legends available, consult Customer Service Center.

NOTE: Actuators & frames available separately, see page G-55. Hardware: two each—mounting screws, nuts, lockwashers and standoffs for 1/8 inch thick panel are supplied standard on all switches with panel mounting brackets. Hardware available separately, see Technical Data section of this catalog.

TERMINATIONS

Z SOLDER LUG

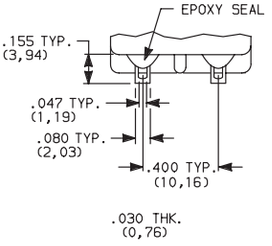

9201 Only

C PC THRU-HOLE

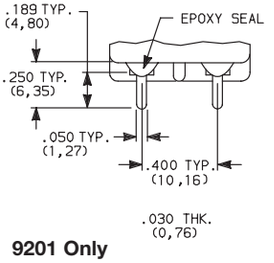

PC MOUNTING

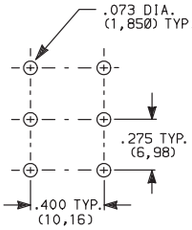

9201 Only

Z4 QUICK CONNECT

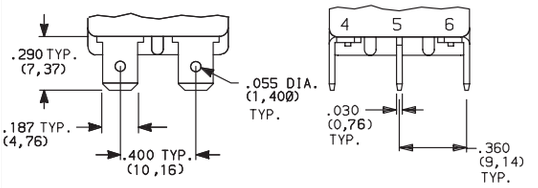

9201 and 9221

NOTE: Only termination available with 9221 model. Must be ordered with D seal option. Mating terminal standard Nema .187" quick connect.

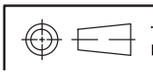

Third Angle Projection

Dimensions are shown: Inches (mm)
Specifications and dimensions subject to change

9000 Series
Power Rocker and Lever Handle Switches

TERMINATIONS

AV2 VERTICAL RIGHT ANGLE, PC THRU-HOLE

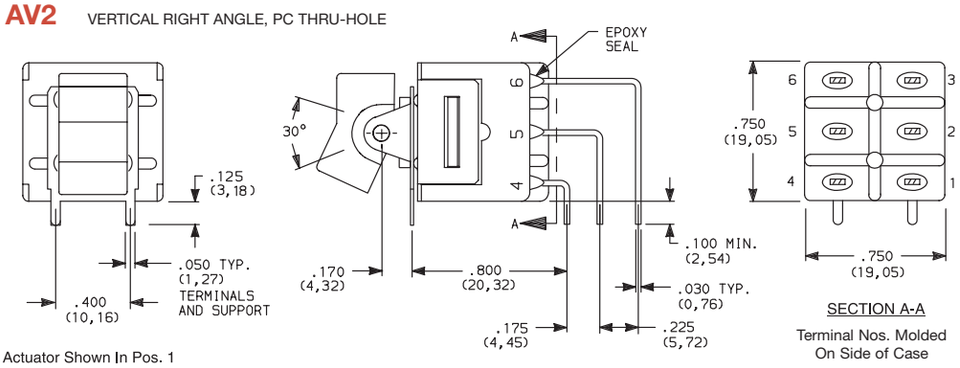

Actuator Shown In Pos. 1

9201J1AV2QE2
Vertical Actuation
DPDT

PC MOUNTING

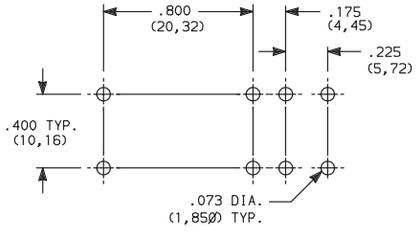

9201 Only

NOTE: Terminal bend radii and lead-in manufacturing option.
Terminal spacing greater than 3mm at all points.

CONTACT MATERIAL

OPTION CODE	MODEL	CONTACT MATERIAL	TERMINAL PLATING	RATINGS
Q	9201	SILVER [1,2]	SILVER OR TIN [2,5]	GP (general purpose) 6 AMPS 125 VAC 50/60 Hz T85 10,000 cycles (10E3) 3 AMPS 250 VAC 50/60 Hz T85 10,000 cycles R (resistive) 6 AMPS 30 VDC T85 10,000 cycles
	9221	SILVER CADMIUM OXIDE [3,4,6]	TIN [5]	GP (general purpose) 10 AMPS 125 VAC 50/60 Hz T85 10,000 cycles 5 AMPS 250 VAC 50/60 Hz T85 10,000 cycles R (resistive) 10 AMPS 30 VDC T85 10,000 cycles

* Note: See Technical Data section of this catalog for RoHS compliant and compatible definitions and specifications.

[1] END CONTACTS: Coin silver, silver plated.
[2] CENTER CONTACTS & ALL TERMINALS: Copper alloy, silver plated.
[3] END CONTACTS: Silver cadmium oxide.
[4] CENTER CONTACTS: Copper alloy, silver plated.
[5] Z4 TERMINALS ONLY: Copper alloy, tin plated.
[6] Cadmium used for electrical contacts is acceptable for RoHS.

NOTE: Any models supplied with Q contact material is RoHS compliant.

9221 model must be ordered with Z4 terminations and D seal option.

All 9000 Series models meet international dimensional and electrical requirements.

SEAL

E EPOXY SEAL

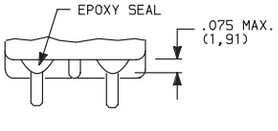

Not available with 9221 model or Z4 terminations.

D NO EPOXY SEAL

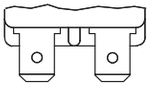

Must be ordered with 9221 model and Z4 termination.

Third Angle Projection

Dimensions are shown: Inches (mm)
Specifications and dimensions subject to change

AVAILABLE HARDWARE

Panel mounting hardware for rocker and lever handle switches is available separately. Mounting hardware consists of two screws, two nuts, two standoffs and two lockwashers per switch, and is available for panel thicknesses of 1/16, 3/32 and 1/8 inch. See part numbers below.

TYPICAL ASSEMBLY

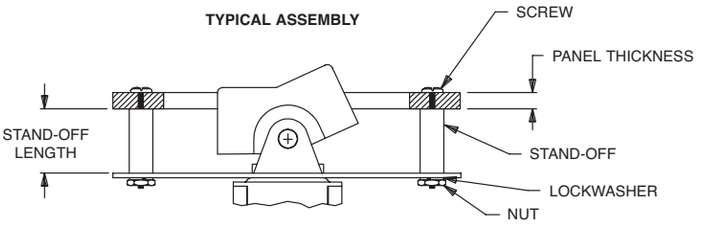

J1 & J2 actuators

PART NO.	PANEL THK.	STANDOFF LENGTH
761101000	1/16 IN. (1,59)	.295 (7,49)
761102000	3/32 IN. (2,38)	.264 (6,71)
761103000	1/8 IN. (3,18)	.233 (5,92)

J1 Actuator

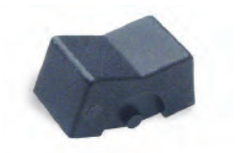

PART NO.

776A01000 WHITE
776A02263 BLACK
776A03000 RED

Material: Nylon
Finish: Matte

J2 Actuator

PART NO.

760501000 WHITE
760502263 BLACK
760503000 RED

Material: Nylon
Finish: Matte

J3, J37 Actuators

PART NO.

766601000 WHITE
766602263 BLACK
766603000 RED

Material: Nylon
Finish: Matte

Frame for J37 Actuators

PART NO.

445400746 BLACK ENAMEL
445400747 WHITE ENAMEL

Material: Spring Steel

NOTE: Additional nuts, screws and lockwashers available separately, see Technical Data section of this catalog.

Other colors available, consult Customer Service Center.

Third Angle Projection

Dimensions are shown: Inches (mm)
Specifications and dimensions subject to change

DA Series
Miniature Single Pole Rocker Switches

Features/Benefits

- ***Nice actuator styling with multiple options***
- ***Guards to prevent accidental actuation***
- ***Momentary and maintained functions***
- ***IP65 splash proof rubber boot option***
- ***RoHS compliant***

Typical Applications

- ***Small appliances***
- ***Computers and peripherals***
- ***Medical instrumentation***

UL 61058-1

Specifications

CONTACT RATING:
16 AMPS @ 125 VAC, 1/3 HP;
10 AMPS @ 250 VAC, 1/2 HP.
10 AMPS @ 125 VAC, 6 AMPS @ 250 VAC.
ELECTRICAL LIFE: 10,000 make and break cycles at full load.
INSULATION RESISTANCE: 10^8 Ω min.
DIELECTRIC STRENGTH: 1,500 VRMS @ sea level.
OPERATING TEMPERATURE: -20°C to +85°C

Materials

HOUSING AND ACTUATOR: 6/6 nylon (UL94V-2), black, matte finish.
ILLUMINATED ACTUATOR: Polycarbonate, matte finish.
CENTER CONTACTS: Silver plated, copper alloy.
END CONTACTS: Silver plated.
ALL TERMINALS: Silver plated, copper alloy.

NOTE: Specifications and materials listed above are for switches with standard options. For information on specific and custom switches, consult Customer Service Center.

Build-A-Switch

To order, simply select desired option from each category and place in the appropriate box. Available options are shown and described on pages G-57 through G-59. For additional options not shown in catalog, consult Customer Service Center.

Switch Function
DA101 SPDT On-None-On
DA102 SPST On-None-Off
DA103 SPDT On-Off-On

Actuator
J1 Rocker
J2 Two-tone rocker
***J3** Illuminated rocker
J4 Circle, illuminated rocker
J5 Oval, illuminated rocker

Actuator Color
1-5 See Chart on Page G-59
***R** Red, illuminated
***A** Amber, illuminated
***G** Green, illuminated

Mounting Style/Color
S2 Snap-in, black
S1 Snap-in, white
B2 Recessed snap-in bracket, black
G2 Guard, black

Termination
15 .187" quick connect
17 Solder lug
02 Thru-hole
A Right angle

Actuator Marking
(NONE) No marking
D ON-OFF
H "O I" - international ON-OFF
N Large dot
P "O -" international ON-OFF

Contact Rating
QF Silver

Lamp Rating
(NONE) No lamp
6 LED
7 125 VAC neon
8 250 VAC neon

* "J3" illuminated switches are not available with actuator markings

Dimensions are shown: Inches (mm)
Specifications and dimensions subject to change

SWITCH FUNCTION

NO. POLES	MODEL NO.	SWITCH FUNCTION (C&K marking on opposite side)			CONNECTED TERMINALS (C&K marking on opposite side)			SCHEMATIC
SP	DA101	ON	NONE	ON	2-3	N/A	2-1	1 2 3
	DA102	ON	NONE	OFF				1 2 OR 1 2 3 For 7 & 8 Illuminated Versions Only
	DA103	ON	OFF	ON				1 2 + − For 6 Illuminated Versions Only

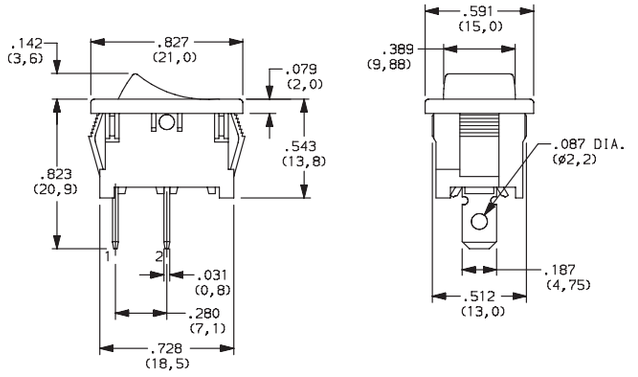

Shown in Pos. 1

ACTUATOR

J1 ROCKER

***J3** ILLUMINATED ROCKER

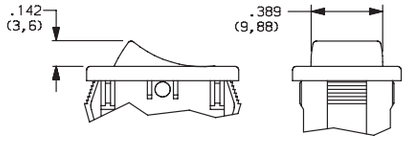

NOTE: J3 actuator available with DA102 switch functions, 7&8 lamp ratings and not available with O2 and A termination options.

* J3 actuator not available with markings

J2 TWO-TONE ROCKER

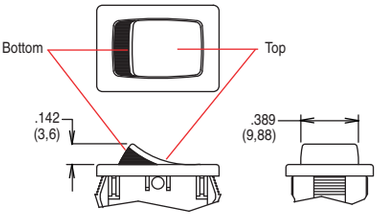

NOTE:

1. Available with DA102 switch function only.
2. Available with None or P actuator marking options only.

Third Angle Projection

Dimensions are shown: Inches (mm)
Specifications and dimensions subject to change

DA Series
Miniature Single Pole Rocker Switches

ACTUATOR

J4 CIRCLE, ILLUMINATED ROCKER

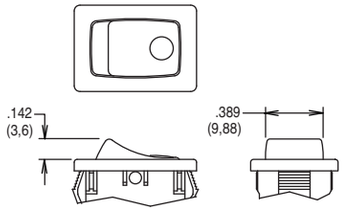

NOTE: Available with DA102 switch function and 7 & 8 lamp ratings combinations only. Not available with O2 and A termination options.

J5 OVAL, ILLUMINATED ROCKER

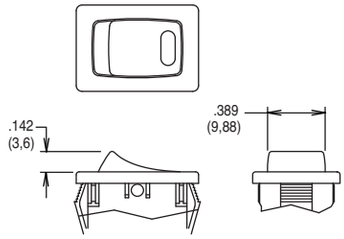

NOTE: Available with DA102 switch function and 6 lamp rating combinations only. Not available with O2 and A termination options.

ACTUATOR COLOR

	OPTION CODE	ACTUATOR COLOR
J1only	2	BLACK
	1	WHITE
	3	RED
J3, J4, J5 only	R	RED, ILLUMINATED
	A	AMBER, ILLUMINATED
	G	GREEN, ILLUMINATED

	OPTION CODE	ACTUATOR COLOR TOP	ACTUATOR COLOR BOTTOM
J2 only	1	WHITE	RED
	2	WHITE	BLACK
	3	RED	WHITE
	4	BLACK	WHTE
	5	BLACK	RED

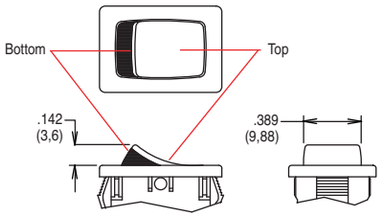

MOUNTING STYLE/COLOR

S2 SNAP-IN, BLACK

S1 SNAP-IN, WHITE

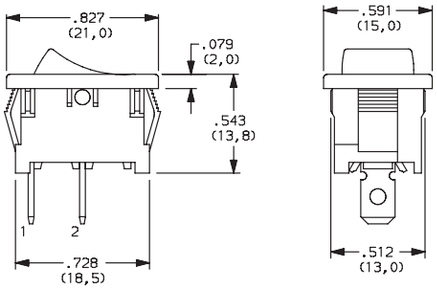

Actuator shown in Pos. 1

G2 GUARD, BLACK

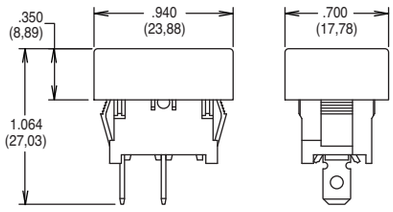

NOTE: Available with DA10X switch functions only.

S2, S1 & G2 PANEL MOUNTING

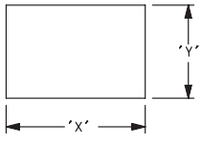

PANEL THICKNESS	"X"	"Y"
0.030-0.049 (0,75-1,25)	0.756-.004 (19,2-0,1)	0.512+.004 (13,0+0,1)
0.049-0.079 (1,25-2,0)	0.764-.004 (19,4-0,1)	0.512+.004 (13,0+0,1)
0.079-0.118 (2,0-3,0)	0.779-.004 (19,8-0,1)	0.512+.004 (13,0+0,1)

B2 RECESSED SNAP-IN BRACKET, BLACK

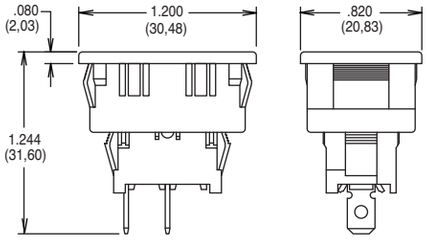

NOTE: Available with DA10X switch functions only.

B2 PANEL MOUNTING

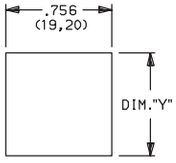

PANEL THICKNESS	"Y"
0.030-0.049 (0,75-0,25)	1.068 (27,13)
0.049-0.079 (1,25-2,0)	1.076 (27,33)
0.079-0.118 (2,0-3,0)	1.092 (27,74)

Third Angle Projection

Dimensions are shown: Inches (mm)
Specifications and dimensions subject to change

TERMINATION

15 .187" QUICK CONNECT

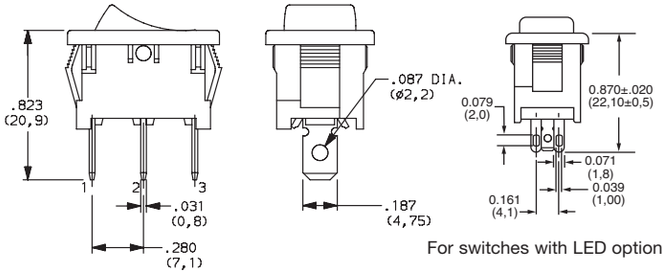

For switches with LED option

17 SOLDER LUG

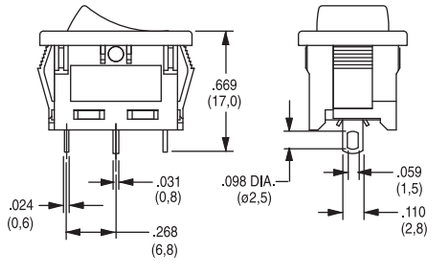

02* THRU-HOLE

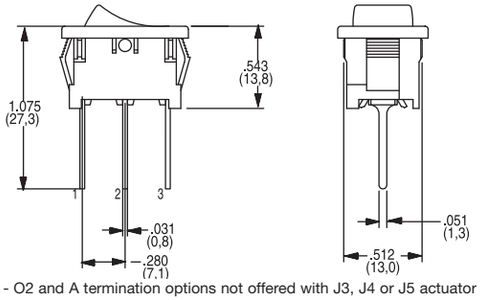

A* RIGHT ANGLE

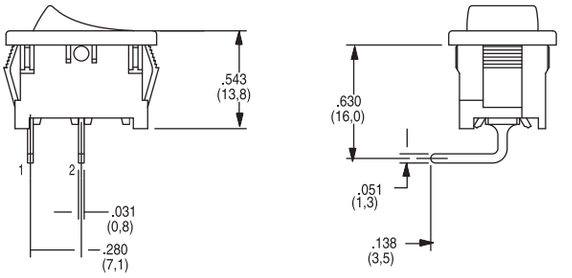

* NOTE - O2 and A termination options not offered with J3, J4 or J5 actuator options.

ACTUATOR MARKING

NONE NO MARKING

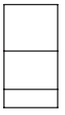

D ON-OFF

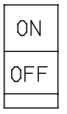

H O I

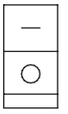

N LARGE DOT

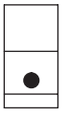

P O -

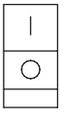

All models shown in Pos. 1
Markings not available with J3 actuator

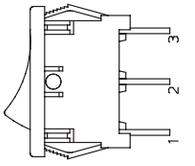

NOTE: Orientation of actuator marking and terminals.

CONTACT MATERIAL

OPTION CODE	CONTACT AND TERMINAL MATERIAL	RATINGS	
QF	SILVER	POWER	16 AMPS @ 125 VAC; 1/3 HP; 10 AMPS @ 250 VAC; 1/2 10 AMPS @ 125 VAC, 6 AMPS @ 250 VAC

* Note: See Technical Data section of this catalog for RoHS compliant and compatible definitions and specifications.

LAMP RATING

(NONE) NO LAMP

6 LED RATING @ 10 mA V_f=1.85V

7 125 VAC 33kΩ NEON

8 250 VAC 150kΩ NEON

ACCESSORIES

216C00000 IP65 SPLASH PROOF RUBBER BOOT

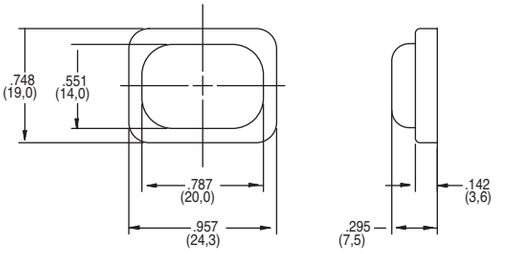

Third Angle Projection

Dimensions are shown: Inches (mm)
Specifications and dimensions subject to change

D Series
Miniature Snap-in Power Rocker Switches

Features/Benefits

- ***Momentary and maintained models***
- ***PC and quick connect terminals***
- ***Recessed bracket available — prevents accidental actuation***
- ***RoHS compliant***
- ***Gold plated options available***

Typical Applications

- ***Small appliances***
- ***Computers and peripherals***
- ***Medical instrumentation***

UL 61058-1

Specifications

CONTACT RATING:

D101, D102, D103, D105, D108, D201, D202, D203

GP (general purpose)
4 AMPS 125 VAC 50/60 Hz T85 10,000 cycles
2 AMPS 250 VAC 50/60 Hz T85 10,000 cycles

R (resistive)
4 AMPS 30 VDC T85 10,000 cycles

D501, D502, D503, D508, D601, D602, D608

GP (general purpose)
10 AMPS 125 VAC 50/60 Hz T85 10,000 cycles
5 AMPS 250 VAC 50/60 Hz T85 10,000 cycles

R (resistive)
10 AMPS 30 VDC T85 10,000 cycles

0.4VA @ 20V AC/DC (gold plating) available upon request

ELECTRICAL LIFE: 10,000 make-and-break cycles at full load.

INSULATION RESISTANCE: 10^9 Ω min.

DIELECTRIC STRENGTH: 1,000 Vrms min. @ sea level.

Materials

ACTUATOR & HOUSING: 6/6 nylon (UL 94V-2), color black, finish: matte.

MOVABLE CONTACTS: D10X and D20X Models: Copper, silver plated. D50X and D60X Models: Coin silver, silver plated.

STATIONARY CONTACTS AND TERMINALS: Copper or brass, silver plated. Gold plating available.

CONTACT SPRING: Music wire or stainless steel.

OPERATING TEMPERATURE: -30°C to +65°C

NOTE: Specifications and materials listed above are for standard switches. For information on specific and custom switches, consult Customer Service Center.

Build-A-Switch

To order, simply select desired option from each category and place in the appropriate box. Available options are shown and described on pages G–61 through G–64. For additional options not shown in catalog, consult Customer Service Center.

Switch Function
- **D101** SPDT, On-None-On
- **D102** SPST, On-None-Off
- **D103** SPDT, On-Off-On
- **D105** SPDT, Mom.-Off-Mom.
- **D108** SPDT, Mom.-None-On
- **D201** DPDT, On-None-On
- **D202** DPST, On-None-Off
- **D203** DPDT, On-Off-On
- **D501** SPDT, On-None-On
- **D502** SPST, On-None-Off
- **D503** SPDT, On-Off-On
- **D508** SPDT, Mom.-None-On
- **D601** DPDT, On-None-On
- **D602** DPST, On-None-Off
- **D608** DPDT, Mom.-None-On

Actuator
- **J1** Rocker
- **J5** Lever

Actuator Color
- **2** Black
- **1** White
- **3** Red

Mounting Style/Color
- **S2** Snap-in, black
- **B2** Recessed snap-in actuator guard, black
- **G2** Actuator guard, black
- **S1** Snap-in, white

Terminations
- **15** Quick connect
- **A** Right angle, PC thru-hole
- **02** PC Thru-hole
- **05** Twisted quick connect
- **06** Extended PC thru-hole
- **17** Wirable quick connect

Actuator Markings
- **NONE** No marking
- **D** ON-OFF
- **H** O I
- **N** Large dot
- **P** O –
- **R** Red rectangle on end
- **U** Large dot on end

Contact Material
- **QA** Silver

Gold plating options available contact Customer Service

Dimensions are shown: Inches (mm)
Specifications and dimensions subject to change

SWITCH FUNCTION

NO. POLES	MODEL NO.	AMP RATING*	SWITCH FUNCTION POS. 1	SWITCH FUNCTION POS. 2	SWITCH FUNCTION POS. 3	CONNECTED TERMINALS POS. 1	CONNECTED TERMINALS POS. 2	CONNECTED TERMINALS POS. 3	SCHEMATIC
SP	D102 D502	4 10	ON	NONE	OFF	1-1A	N/A	OPEN	SPST
	D101 D501	4 10	ON	NONE	ON			1-1B	SPDT
	D103 D503	4 10		OFF			OPEN		
	D105	4	MOM.	OFF	MOM.				
	D108 D508	4 10	MOM.	NONE	ON		N/A		

SPDT

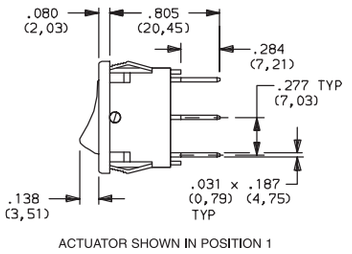

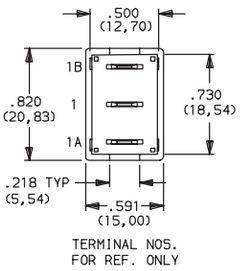

Part number shown: D101J12S215QA

NO. POLES	MODEL NO.	AMP RATING*	SWITCH FUNCTION POS. 1	SWITCH FUNCTION POS. 2	SWITCH FUNCTION POS. 3	CONNECTED TERMINALS POS. 1	CONNECTED TERMINALS POS. 2	CONNECTED TERMINALS POS. 3	SCHEMATIC
DP	D202 D602	4 10	ON	NONE	OFF	1-1A, 2-2A	N/A	OPEN	DPST
	D201 D601	4 10	ON	NONE	ON			1-1B, 2-2B	DPDT
	D203	4		OFF			OPEN		
	D608	10	MOM.	NONE			N/A		

DPDT

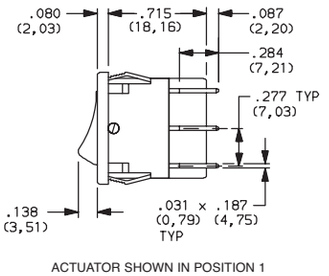

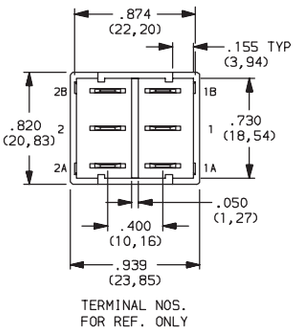

Part number shown: D201J12S215QA

MOM. = Momentary

*AMP RATING: see G-60

See CONTACT MATERIALS, page G-64.

Third Angle Projection

Dimensions are shown: Inches (mm)
Specifications and dimensions subject to change

D Series
Miniature Snap-in Power Rocker Switches

ACTUATOR

ACTUATOR COLOR
ACTUATOR

J1 ROCKER

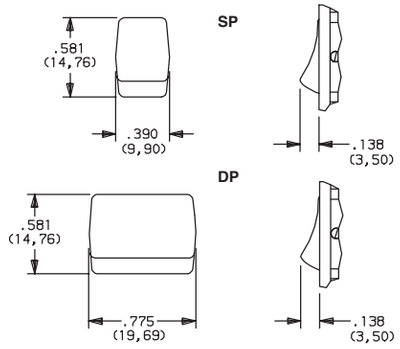

J5 LEVER

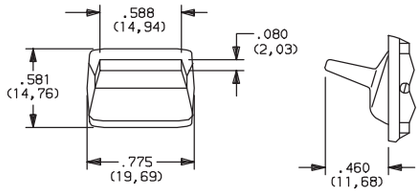

'J5' actuator available only with DP models D201, D202, D601 and D602.

OPTION CODE	ACTUATOR COLOR
2	BLACK
1	WHITE
3	RED

NOTE: Actuator finish: matte. Other colors available, consult Customer Service Center.

MOUNTING STYLE/COLOR

S SNAP-IN

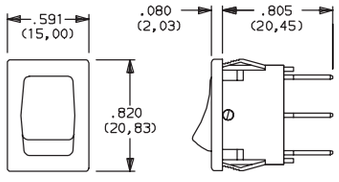

OPTION CODE	HOUSING COLOR
2	(STD.) BLACK
1	WHITE

NOTE: Frame finish on housing: matte. Other colors available, consult Customer Service Center.

B2 RECESSED SNAP-IN ACTUATOR GUARD, BLACK

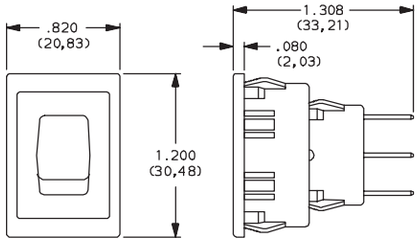

NOTE: Vertical mount, SP models only.

G2 ACTUATOR GUARD, BLACK

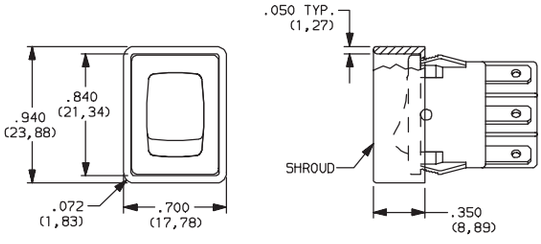

NOTE: Vertical mount, SP models only.

PANEL MOUNTING

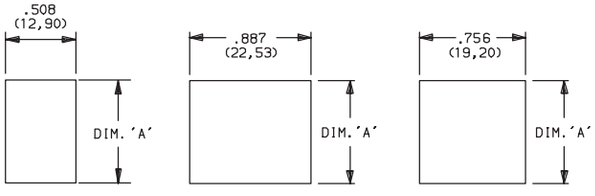

SP MODELS 'S' & 'G2' mounting styles

DP MODELS 'S' mounting style

SP MODELS 'B2' mounting style

PANEL THICKNESS	DIM 'A' SP & DP MODELS 'S' MOUNTING STYLE	DIM 'A' WITH 'G2" OPTION SP MODELS ONLY	DIM 'A' SP MODELS 'B' MOUNTING STYLE
.030–.049 (0,76) (1,24)	.756 (19,20)	.764 (19,41)	1.068 (27,13)
.049–.079 (1,24) (2,01)	.764 (19,41)	.780 (19,81)	1.076 (27,33)
.079–.118 (2,01) (3,00)	.780 (19,81)	n/a	1.092 (27,74)

NOTE: Blank insert available for SP models only, see page G-64.

Third Angle Projection

Dimensions are shown: Inches (mm)
Specifications and dimensions subject to change

TERMINATIONS

A RIGHT ANGLE, PC THRU-HOLE

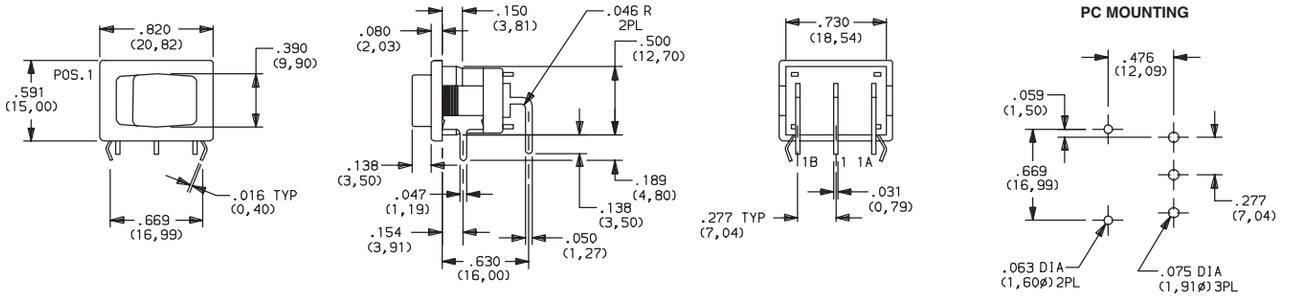

Available with D101, D102, D501, D502 SP models only.

TERMINATIONS

02 PC THRU-HOLE

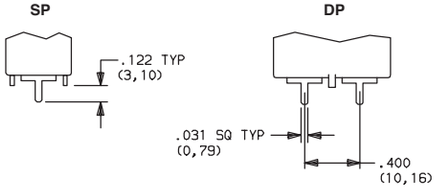

Available with DX01 and DX02 models only.

06 EXTENDED PC THRU-HOLE

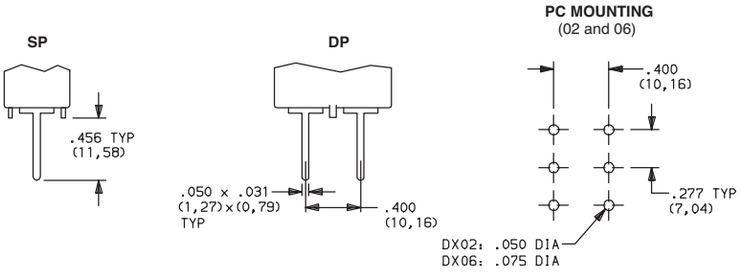

Available with DX01 and DX02 models only.

15 QUICK CONNECT

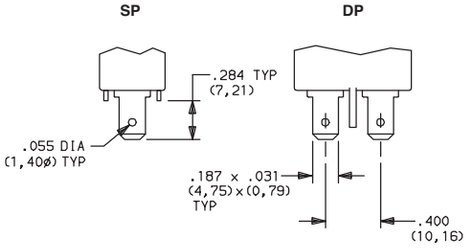

Available with DX01 and DX02 models only.

05 TWISTED QUICK CONNECT

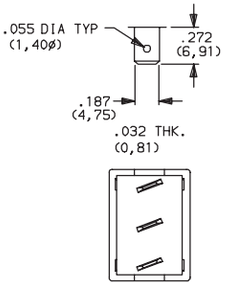

NOTE: Terminals are twisted.

17 WIRABLE QUICK CONNECT

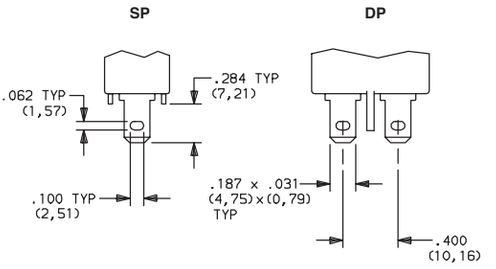

Available with DX01 and DX02 models only.

ACTUATORS

NONE NO MARKING **D** ON-OFF **H** O | **N** LARGE DOT **P** O – **R** RED RECTANGLE ON END **U** LARGE DOT ON END

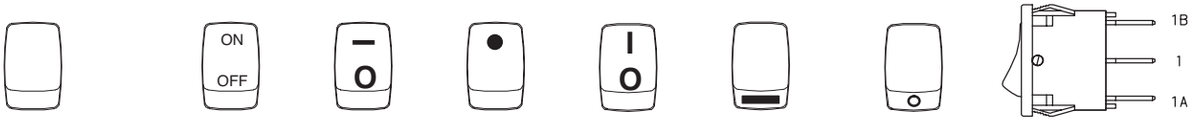

'D, H, P & U' marking options: marking color white, standard for all actuator colors except white. Black marking color, standard for white actuators. 'R & N' marking option: red marking color, standard. Consult Customer Service Center for other available marking colors.

NOTE: Orientation of actuator markings and terminals.

Third Angle Projection

Dimensions are shown: Inches (mm)
Specifications and dimensions subject to change

D Series
Miniature Snap-in Power Rocker Switches

CONTACT MATERIAL

OPTION CODE	CONTACT AND TERMINAL MATERIAL	RATINGS
QA	SILVER [1]	D101, D102, D103, D105, D108, D201, D202, D203 GP (general purpose) 4 AMPS 125 VAC 50/60 Hz T85 10,000 cycles 2 AMPS 250 VAC 50/60 Hz T85 10,000 cycles R (resistive) 4 AMPS 30 VDC T85 10,000 cycles D501, D502, D503, D508, D601, D602, D608 GP (general purpose) 10 AMPS 125 VAC 50/60 Hz T85 10,000 cycles 5 AMPS 250 VAC 50/60 Hz T85 10,000 cycles R (resistive) 10 AMPS 30 VDC T85 10,000 cycles

[1]MOVABLE CONTACT: D10X and D20X MODELS: Copper, silver plated.
D50X and D60X MODELS: Coin silver, silver plated.

STATIONARY CONTACTS & TERMINALS: Copper or brass, silver plated.

0.4VA @ 20V AC/DC Gold plated options avilable contact Customer Service.

AVAILABLE HARDWARE

Insert
SP Only

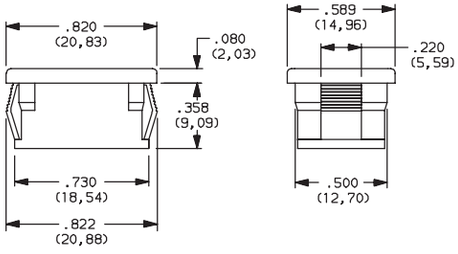

PART NO.
057190200 BLACK

Material: Nylon 6/6
Finish: Matte

Recessed Actuator Guard,
SP Only

599D02000 BLACK

Material: 6/6 Nylon
Finish: Matte

Actuator Guard

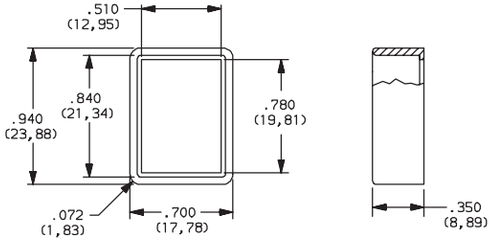

PART NO.
104C22000

Material: PBT thermoplastic
Finish: Matte

PART NO.
216C00000 IP65 SPLASH PROOF RUBBER BOOT

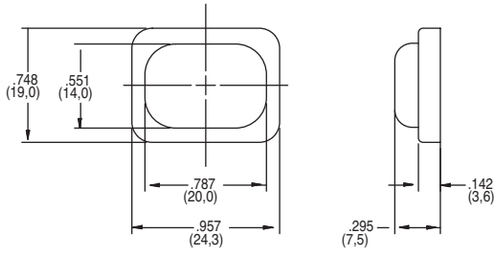

Third Angle Projection

Dimensions are shown: Inches (mm)
Specifications and dimensions subject to change

DM Series
Miniature 2 Pole Power Rocker Switches

Features/Benefits

- ***3 AMPS to 10 AMPS***
- ***Quick connect terminals***
- ***Double pole in miniature size***
- ***Recessed bracket available—prevents accidental actuation***
- ***RoHS compliant***

Typical Applications

- ***Computers***
- ***Appliances***
- ***Electric tools***

UL 61058-1

Specifications

CONTACT RATING:

DM21, DM22:

GP (general purpose)
3 AMPS 125 VAC 50/60 Hz T85 10,000 cycles
2 AMPS 250 VAC 50/60 Hz T85 10,000 cycles

R (resistive)
3 AMPS 30 VDC T85 10,000 cycles

DM61, DM62:

GP (general purpose)
10 AMPS 125 VAC 50/60 Hz T85 10,000 cycles
5 AMPS 250 VAC 50/60 Hz T85 10,000 cycles

R (resistive)
10 AMPS 30 VDC T85 10,000 cycles

ELECTRICAL LIFE: 10,000 make-and-break cycles at full load.

INSULATION RESISTANCE: 10^9 Ω min.

DIELECTRIC STRENGTH: 1,000 Vrms min. @ sea level.

OPERATING TEMPERATURE: -20°C to +65°C

Materials

HOUSING & ACTUATOR: 6/6 nylon (UL94V-2), black.

MOVABLE CONTACTS: DM2X Models: Copper, silver plated.
DM6X Models: Coin silver, silver plated.

STATIONARY CONTACTS & TERMINALS: Copper or brass, silver plated.

CONTACT SPRING: Music wire or stainless steel.

NOTE: Any models supplied with Q contact material are RoHS compliant.

NOTE: Specifications and materials listed above are for standard switches.
For information on specific and custom switches, consult Customer Service Center.

Build-A-Switch

To order, simply select desired option from each category and place in the appropriate box. Available options are shown and described on pages G–66 and G–68. For additional options not shown in catalog, consult Customer Service Center.

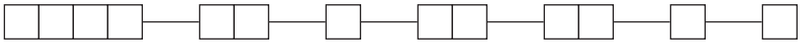

Switch Function
DM21 DPDT, On-On
DM22 DPST, On-Off
DM61 (STD.) DPDT, On-On
DM62 (STD.) DPST, On-Off

Actuator
J1 Rocker

Actuator Color
2 Black
1 White

Housing Style/Color
S2 Snap-in, black
B2 Recessed snap-in actuator guard, black
G2 Actuator guard, black

Terminations
05 Quick connect

Actuator Markings
NONE No marking
D ON-OFF
H O I
P O –

Contact Material
Q Silver

Dimensions are shown: Inches (mm)
Specifications and dimensions subject to change

DM Series
Miniature 2 Pole Power Rocker Switches

SWITCH FUNCTION

NO. POLES	MODEL NO.	AMP RATING*	SWITCH FUNCTION POS. 1	SWITCH FUNCTION POS. 2	CONNECTED TERMINALS POS. 1	CONNECTED TERMINALS POS. 2	SCHEMATIC
DP	DM22 DM62	3 10	ON	OFF	1-1A, 2-2A	OPEN	DPST
	DM21 DM61	3 10	ON	ON	1-1A, 2-2A	1-1B, 2-2B	DPDT

DPDT

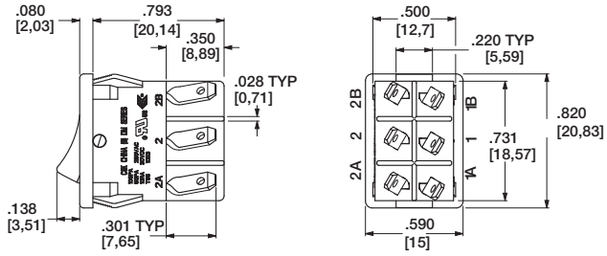

PART NUMBER SHOWN: DM21J1XS205Q

NOTES 1. ACTUATOR SHOWN IN POSITION 1-'ON' POSITION

RATINGS: See page G-65 for complete ratings.

UL 61058-1 tested to 30C temperature rise @ 6,000 cycles.

ACTUATOR

ACTUATOR COLOR

ACTUATOR

J1 ROCKER

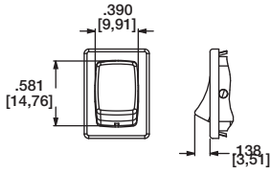

OPTION CODE	ACTUATOR COLOR
2	BLACK
1	WHITE

NOTE: Actuator finish: matte. Other colors available, consult Customer Service Center.

HOUSING STYLE/COLOR

S2 SNAP-IN, BLACK

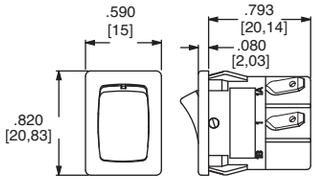

NOTE: Housing finish: matte. Other colors available, consult Customer Service Center.

B2 RECESSED SNAP-IN ACTUATOR GUARD, BLACK

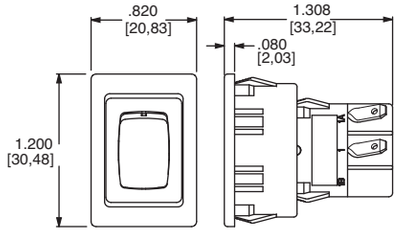

Third Angle Projection

Dimensions are shown: Inches (mm)
Specifications and dimensions subject to change

HOUSING STYLE/COLOR

G2 ACTUATOR GUARD, BLACK

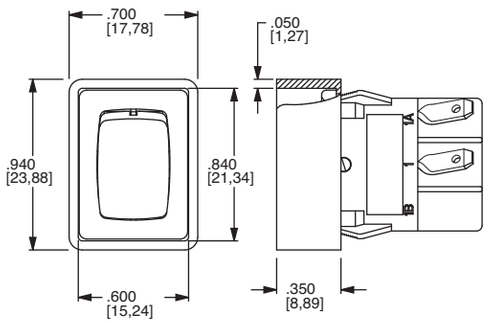

PANEL MOUNTING

'S2' & 'G2' housing styles **'B2' housing style**

NOTE: Blank insert available for SP models only, see page H–76.

PANEL THICKNESS	DIM 'A' 'S2' & 'G2' HOUSING STYLES	DIM 'A' 'G2' OPTION SP MODELS ONLY	DIM 'A' 'B2' HOUSING STYLES
.030–.049 (0,76) (1,24)	.756 (19,20)	0.764 (19,41)	1.068 (27,13)
.049–.079 (1,24) (2,01)	.764 (19,41)	0.780 (19,81)	1.076 (27,33)
.079–.118 (2,01) (3,00)	.780 (19,81)	n/a	1.092 (27,74)

TERMINATIONS

05 QUICK CONNECT

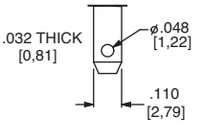

ACTUATOR MARKINGS

NONE NO MARKING

D ON-OFF

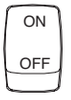

H O I

P O –

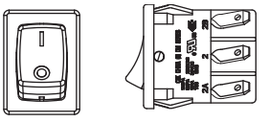

NOTE: Orientation of actuator markings and terminals.

'D & P' marking options: marking color white, standard for all actuator colors except white actuators. Black marking color standard for white actuators. Consult Customer Service Center for other available marking colors.

CONTACT MATERIAL

OPTION CODE	CONTACT AND TERMINAL MATERIAL	RATINGS		
Q	SILVER [1,2]	DM21, DM22:	GP (general purpose)	3 AMPS 125 VAC 50/60 Hz T85 10,000 cycles
				2 AMPS 250 VAC 50/60 Hz T85 10,000 cycles
			R (resistive)	3 AMPS 30 VDC T85 10,000 cycles
		DM61, DM62:	GP (general purpose)	10 AMPS 125 VAC 50/60 Hz T85 10,000 cycles
				5 AMPS 250 VAC 50/60 Hz T85 10,000 cycles
			R (resistive)	10 AMPS 30 VDC T85 10,000 cycles

* Note: See Technical Data section of this catalog for RoHS compliant and compatible definitions and specifications.

[1] MOVABLE CONTACT: DM2X Models: Copper, silver plated.
DM6X Models: Coin silver, silver plated.

[2] STATIONARY CONTACTS & TERMINALS: Copper or brass, silver plated.

NOTE: Any models supplied with Q contact material are RoHS compliant.

Third Angle Projection

Dimensions are shown: Inches (mm)
Specifications and dimensions subject to change

DM Series
Miniature 2 Pole Power Rocker Switches

AVAILABLE HARDWARE

Insert

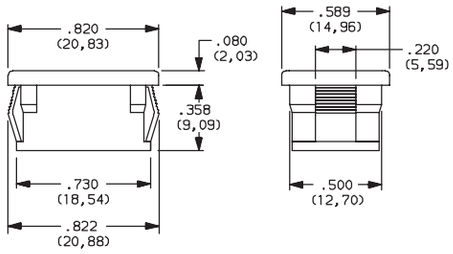

PART NO.

057190200

Material: Nylon 6/6
Finish: Matte

Recessed Actuator Guard

PART NO.

599D02000

Material: 6/6 Nylon
Finish: Matte

Actuator Guard

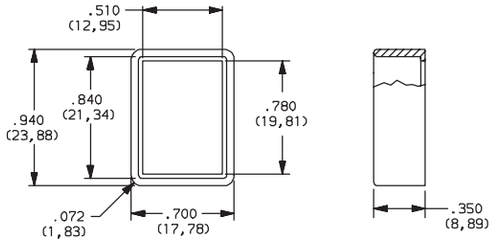

PART NO.

104C22000

Material: PBT thermoplastic
Finish: Matte

PART NO.

216C00000 IP65 SPLASH PROOF RUBBER BOOT

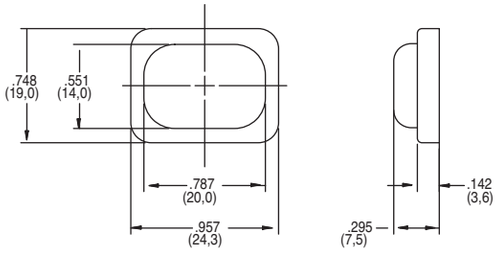

Third Angle Projection

Dimensions are shown: Inches (mm)
Specifications and dimensions subject to change

DM Series
Miniature Illuminated Power Rocker Switches

Features/Benefits

- ***3 AMPS to 10 AMPS***
- ***Illuminated LED***
- ***Positive detent***
- ***RoHS compliant***

Typical Applications

- ***Instrumentation***
- ***Industrial***
- ***Office machines***

UL 61058-1

Specifications

CONTACT RATING: DM14 and DM24 Models: 3 AMPS @ 125 V AC; 2 AMPS @ 250 V AC. DM54 and DM64 Models: 10 AMPS @ 125 V AC; 5 AMPS @ 250 V AC (UL).

ELECTRICAL LIFE: 10,000 make-and-break cycles at full load.

INSULATION RESISTANCE: 10^9 Ω min.

DIELECTRIC STRENGTH: 1,000 Vrms min. @ sea level.

NOTE: Any models supplied with Q contact material are RoHS compliant.

NOTE: Specification and materials listed above are for standard switches. For information on specific and custom switches, consult Customer Service Center.

Materials

HOUSING: 6/6 nylon (UL94V-2), black.

ACTUATOR: 6/6 nylon (UL94V-2), black.

MOVABLE CONTACTS: DM14 and DM24 Models: Copper, silver plated. DM54 and DM64 Models: Coin silver, silver plated.

STATIONARY CONTACTS & TERMINALS: Copper or brass, silver plated.

LED TERMINALS: Brass, unplated.

CONTACT SPRING: Music wire or stainless steel.

OPERATING TEMPERATURE: -20ºC to +65ºC

Build-A-Switch

To order, simply select desired option from each category and place in the appropriate box. Available options are shown and described on pages G–70 and G–72. For additional options not shown in catalog, consult Customer Service Center.

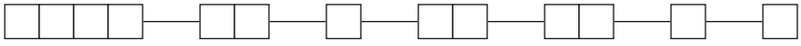

Switch Function
DM14 SPST, 3 AMP
DM24 DPST, 3 AMP
DM54 SPST, 10 AMP
DM64 DPST, 10 AMP

Actuator
J7 Rocker with colorless LED window

Actuator Color
2 Black
1 White

Housing Style/Color
S2 Snap-in, black
G2 Actuator guard, black

Terminations
05 Quick connect

Contact Material
Q Silver

LED Color
3 Red
4 Amber
6 Green

DM Series
Miniature Illuminated Power Rocker Switches

SWITCH FUNCTION

NO. POLES	MODEL NO.	AMP RATING*	SWITCH FUNCTION POS. 1	SWITCH FUNCTION POS. 2	CONNECTED TERMINALS POS. 1	CONNECTED TERMINALS POS. 2	SCHEMATIC
SP	DM14 DM54	3 10	ON	OFF	1-1A	OPEN	SPST
DP	DM24 DM64	3 10	ON	OFF	1-1A, 2-2A	OPEN	DPST

DPDT

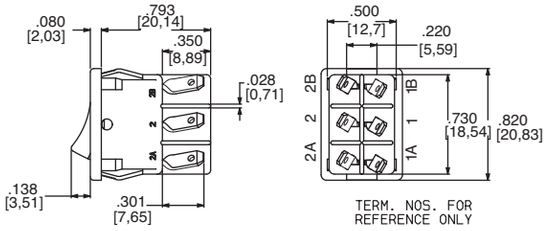

Actuator shown in pos. 1 – 'ON' position.
SPST MODELS (DM14 & DM54) OMIT TERMINALS 2 & 2A.

Part number shown: DM24J72S205Q3

* RATINGS: see page G-69.

ACTUATOR

J7 ROCKER WITH COLORLESS LED WINDOW

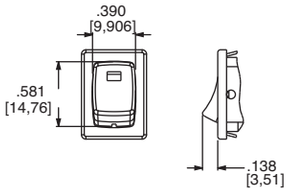

OPTION CODE	ACTUATOR COLOR
2	BLACK
1	WHITE

NOTE: Other colors available, consult Customer Service Center.

HOUSING STYLE/COLOR

S2 SNAP-IN, BLACK

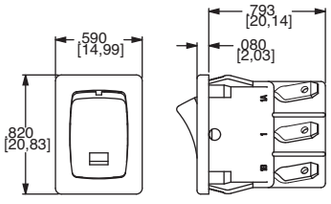

NOTE: Housing finish: matte. Other colors available, consult Customer Service Center.

Third Angle Projection

Dimensions are shown: Inches (mm)
Specifications and dimensions subject to change

HOUSING STYLE/COLOR

G2 ACTUATOR GUARD, BLACK

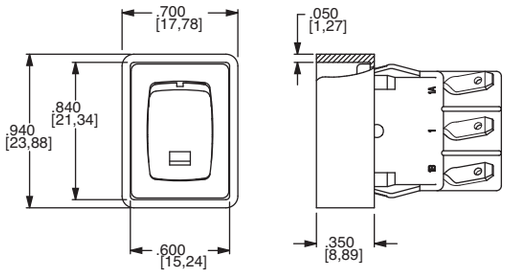

PANEL MOUNTING

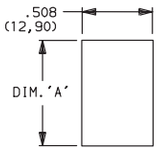

'S2' & 'G2' housing style

NOTE: Blank insert available for SP models only, see page H-80.

PANEL THICKNESS	DIM 'A' 'S2' & 'G2' HOUSING STYLES	DIM 'A' with 'G2' option SP MODELS ONLY
.030–.049 (0,76) (1,24)	0.756 (19,20)	0.764 (19,41)
.049–.079 (1,24) (2,01)	0.764 (19,41)	0.780 (19,81)
.079–.118 (2,01) (3,00)	.780 (19,81)	n/a

TERMINATIONS

05 QUICK CONNECT

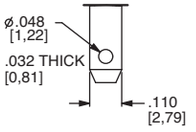

CONTACT MATERIAL

OPTION CODE	CONTACT AND TERMINAL MATERIAL	RATINGS	
Q	SILVER [1,2]	POWER	DM14 and DM24 Models: 3 AMPS @ 125 V AC; 2 AMPS @ 250 V AC. DM54 and DM64 Models: 10 AMPS @ 125 V AC; 5 AMPS @ 250 V AC.

* Note: See Technical Data section of this catalog for RoHS compliant and compatible definitions and specifications.

[1] MOVABLE CONTACTS: DM14 and DM24 models: Copper, silver plated.
DM54 and DM64 models: Coin silver, silver plated.

[2] STATIONARY CONTACTS & TERMINALS: Copper or brass, silver plated.

NOTE: Any models supplied with Q contact material are RoHS compliant.

LED COLOR

OPTION CODE	LED COLOR	FORWARD V_{FD}	CURRENT L_{LED}	REVERSE V_R	INTENSITY M_{CD}	RECOMMENDED RESISTOR @ VOLTAGE		
						5V	12V	24V
3	Red	2.1	10	4V	1.6 typ.	270	1K	2.2K
4	Amber	2.2	20	4V	2.5 typ.	150	510	1.2K
6	Green	2.1	20	4V	2.0 typ.	150	510	1.2K

Third Angle Projection

Dimensions are shown: Inches (mm)
Specifications and dimensions subject to change

DM Series
Miniature Illuminated Power Rocker Switches

AVAILABLE HARDWARE

Blank Insert

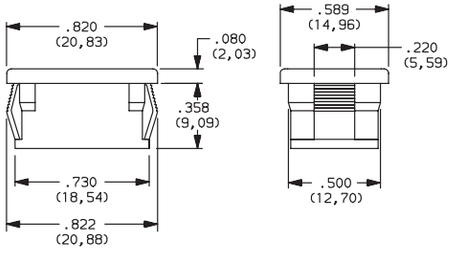

PART NO.

057190200

Material: Zinc nylon 6/6
Finish: Matte

Recessed Bracket

PART NO.

599D02000

Material: 6/6 Nylon
Finish: Matte

Actuator Guard

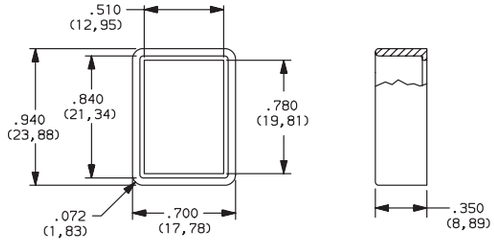

PART NO.

104C22000

Material: PBT thermoplastic
Finish: Matte

DF Series
Power Rocker Switches

Features/Benefits

- ***Power switching up to 16 AMPS***
- ***Sub-panel and Front-panel mounting***
- ***PC and quick connect terminals***
- ***Multi-position and multi-pole function***
- ***RoHS compliant***

Typical Applications

- ***Computers***
- ***Power supplies***
- ***Appliances***
- ***Fitness equipment***
- ***Off-road vehicles***

Specifications

CONTACT RATING: 16 AMPS @ 125, 250 V AC; 1/4 HP @ 125 V AC; 1/2 HP @ 250 V AC; 6 AMPS @ 48 V DC, 2 AMPS @ 60 V DC, 11 AMPS @ 30 V DC

ELECTRICAL LIFE: 10,000 make-and-break cycles at full load.

INSULATION RESISTANCE: 10^9 Ω min.

DIELECTRIC STRENGTH: 1,000 Vrms min. @ sea level.

OPERATING TEMPERATURE: -20ºC to +85ºC

Materials

HOUSING & ACTUATOR: 6/6 nylon (UL 94V-2), black, finish: matte.

CONTACTS: Fine silver, silver plated.

TERMINALS: Copper, silver plated.

CONTACT SPRING: Music wire or stainless steel.

NOTE: Specifications and materials listed above are for standard switches. For information on specific and custom switches, consult Customer Service Center.

Build-A-Switch

To order, simply select desired option from each category and place in the appropriate box. Available options are shown and described on pages G–74 thru G–76. For additional options not shown in catalog, consult Customer Service Center.

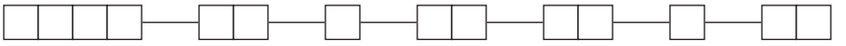

Switch Function
DF52 SPST, Off-On
DF62 DPST, Off-On
DF72 SPDT, Off-On-On

Actuator
J1 Rocker

Actuator Color
2 Black
1 White

Housing Style/Color
S2 Sub-panel, black
G2 Actuator guard, black
P2 Panel, black
S1 Sub-panel, white

Terminations
15 Quick connect
A Right angle, PC thru-hole

Actuator Markings
NONE No marking
D ON-OFF
H 0 I
P 0 –

Contact Material
QA Silver

Dimensions are shown: Inches (mm)
Specifications and dimensions subject to change

DF Series
Power Rocker Switches

SWITCH FUNCTION

NO. POLES	MODEL NO.	SWITCH FUNCTION POS. 1	SWITCH FUNCTION POS. 2	CONNECTED TERMINALS POS. 1	CONNECTED TERMINALS POS. 2	SCHEMATIC
SP	DF52	OFF	ON	OPEN	1-1A	SPST
DP	DF62	OFF	ON	OPEN	1-1A, 2-2A	DPST 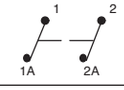

NO. POLES	MODEL NO.	POS. 1	POS. 2	POS. 3	POS. 1	POS. 2	POS. 3	SCHEMATIC
SP	DF72	OFF	ON	ON	OPEN	1 / 2-2A	1 / 2-1A 1 / 2-2A	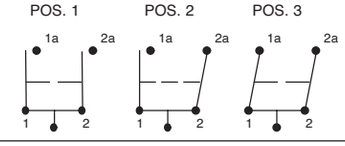

DPST

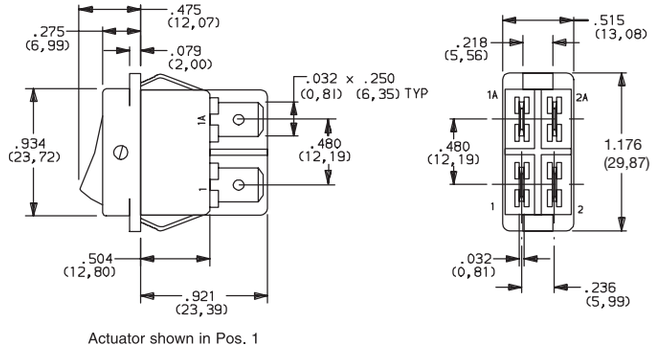

Actuator shown in Pos. 1

Part number shown: DF62J12S215QA

All models

ACTUATOR

ACTUATOR COLOR

ACTUATOR

J1 ROCKER

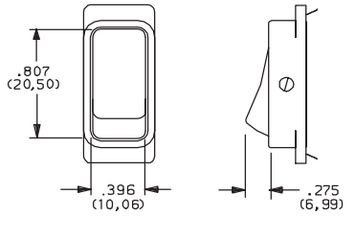

OPTION CODE	ACTUATOR COLOR
2	BLACK
1	WHITE

NOTE: Actuator finish: matte. Other colors available, consult Customer Service Center.

Third Angle Projection

Dimensions are shown: Inches (mm)
Specifications and dimensions subject to change

HOUSING STYLE/COLOR

S SUB-PANEL

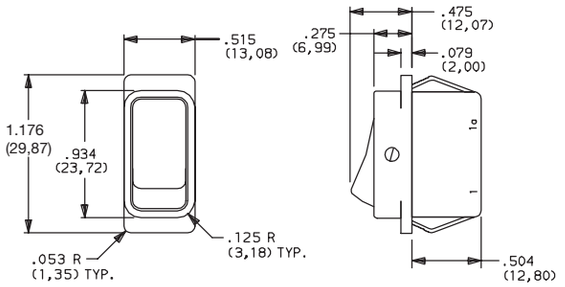

NOTE: DF52 & DF62 models only.

G2 ACTUATOR GUARD

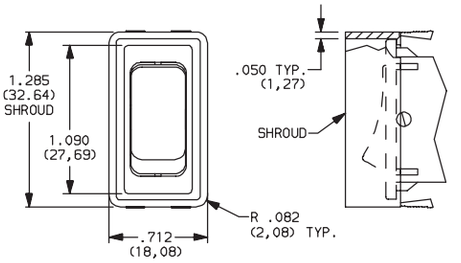

NOTE: Not available with 'A' termination.
Available in black only.

P PANEL

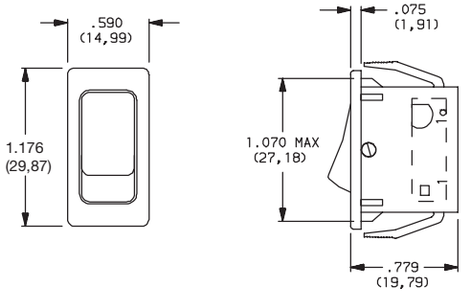

NOTE: Not available with 'A' termination.
Available in black only.

OPTION CODE	HOUSING COLOR
2	(STD.) BLACK
1	WHITE

NOTE: Housing finish: matte. Other colors available, consult Customer Service Center.

PANEL THICKNESS	DIM 'A'
.029–.048 (0,74) (1,22)	1.021 (25,93)
.048–.078 (1,22) (1,98)	1.029 (26,14)
.078–.117 (1,98) (2,97)	1.045 (26,54)
.075–.140 (1,91) (3,56)	1.075 (27,31)

PANEL MOUNTING

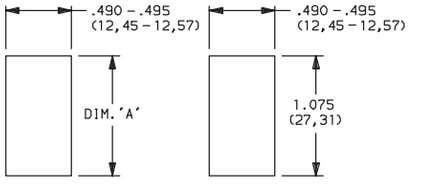

DF52 & DF62 Models with 'S' housing style

DF52, DF62 & DF72 Models with 'P2' & 'G2' housing style

TERMINATIONS

15 QUICK CONNECT

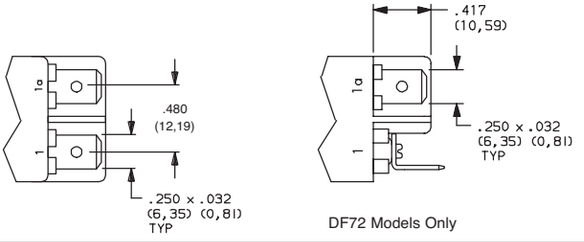

DF72 Models Only

A RIGHT ANGLE, PC THRU-HOLE

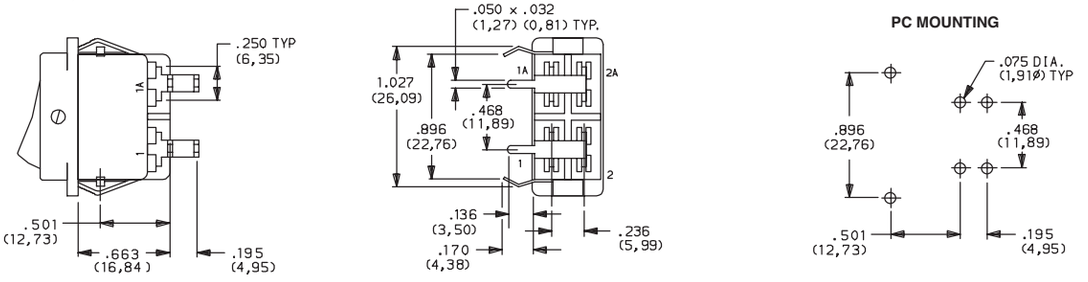

Actuator shown in Pos. 1

NOTE: DF52 and DF62 Models Only

Third Angle Projection

Dimensions are shown: Inches (mm)
Specifications and dimensions subject to change

DF Series
Power Rocker Switches

ACTUATOR MARKINGS

NONE NO MARKING

D ON-OFF

H O |

P O –

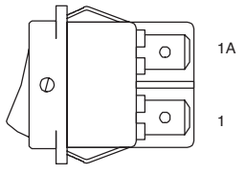

NOTE: Orientation of actuator markings and terminals.

'D, H, & P' marking options: marking color white, standard for all actuator colors except white.
Marking color black, standard for white actuators. Consult Customer Service Center for other available marking colors.

CONTACT MATERIAL

OPTION CODE	CONTACT AND TERMINAL MATERIAL	RATINGS	
QA	SILVER [1,2]	POWER	16 AMPS @ 125, 250 V AC; 1/4 HP @ 125 V AC; 1/2 HP @ 250 V AC; 6 AMPS @ 48 V DC (UL), 2 AMPS @ 60 V DC, 11 AMPS @ 30 V DC
			16 AMPS @ 125, 250 V AC; 1/4 HP @ 125 V AC; 1/2 HP @ 250 V AC (UL)

* Note: See Technical Data section of this catalog for RoHS compliant and compatible definitions and specifications.

[1] CONTACTS: Fine silver, silver plated.
[2] TERMINALS: Copper, silver plated.

All models

AVAILABLE HARDWARE

Actuator Guard

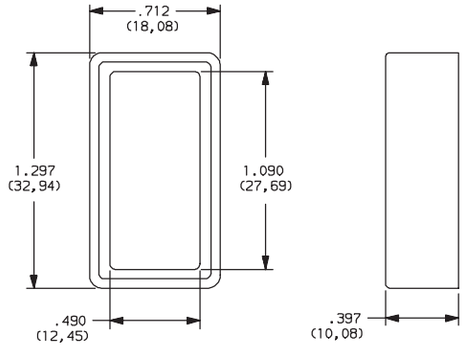

PART NO.
285B02000

Material: Nylon 6/6
Finish: Matte

Third Angle Projection

Dimensions are shown: Inches (mm)
Specifications and dimensions subject to change

CR Series
Round Single Pole Specialty Rocker Switches

Features/Benefits

- ***Round actuator and body***
- ***Nice styling***
- ***Multiple illuminated versions available***
- ***IP65 splash proof rubber boot option***

Typical Applications

- ***Appliances, small and large***
- ***Office equipment***
- ***Computers and peripherals***
- ***Audio/Video equipment***
- ***RoHS compliant***

c UL us **UL 61058-1**

Specifications

CONTACT RATING:
16 AMPS @ 125 VAC, 10 AMPS @ 250 VAC.
16 AMPS @ 125 VAC, 10 AMPS @ 250 VAC.
ELECTRICAL LIFE: 10,000 make and break cycles at full load.
INSULATION RESISTANCE: 10^8 Ω min.
DIELECTRIC STRENGTH: 1,500 VRMS @ sea level.
OPERATING TEMPERATURE: -20ºC to + 85ºC

Materials

HOUSING AND ACTUATOR: 6/6 nylon (UL94V-2), matte finish.
ILLUMINATED ACTUATOR: Polycarbonate, matte finish.
CENTER CONTACTS: Silver plated, copper alloy.
END CONTACTS: Silver plated $AgSn0_2In0_3$.
ALL TERMINALS: Silver plated, copper alloy.

NOTE: Specifications and materials listed above are for switches with standard options. For information on specific and custom switches, consult Customer Service Center.

Build-A-Switch

To order, simply select desired option from each category and place in the appropriate box. Available options are shown and described on pages G–78 through G–80. For additional options not shown in catalog, consult Customer Service Center.

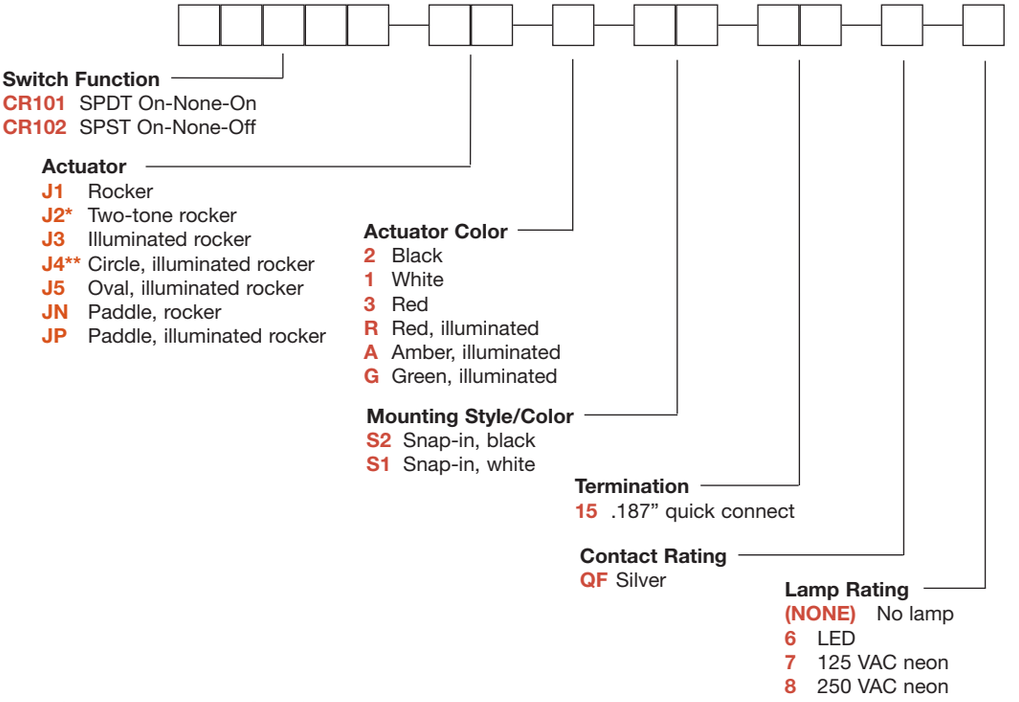

* Refer to table on page G-79 for actuator options.

CR Series
Round Single Pole Specialty Rocker Switches

SWITCH FUNCTION

NO. POLES	MODEL NO.	SWITCH FUNCTION Pos. 1	SWITCH FUNCTION Pos. 2	SWITCH FUNCTION Pos. 3	CONNECTED TERMINALS Pos. 1	CONNECTED TERMINALS Pos. 2	CONNECTED TERMINALS Pos. 3	SCHEMATIC
		C&K marking on opposite side			C&K marking on opposite side			
SP	CR101	ON	NONE	ON	2-3	N/A	2-1	
	CR102	ON	NONE	OFF				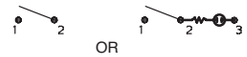 OR For 7 & 8 Illuminated Versions 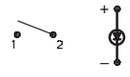

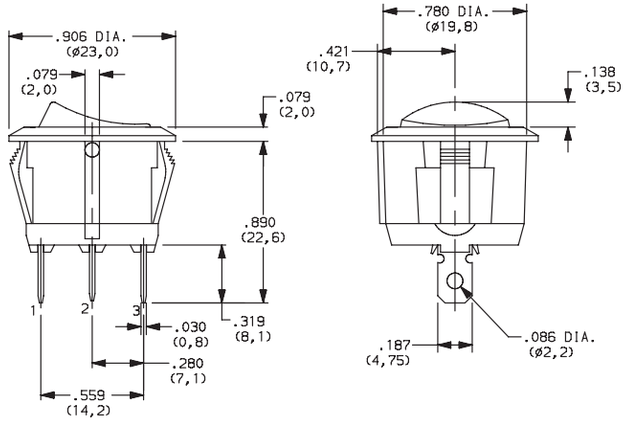

ACTUATOR

J1 ROCKER

J3 ILLUMINATED ROCKER

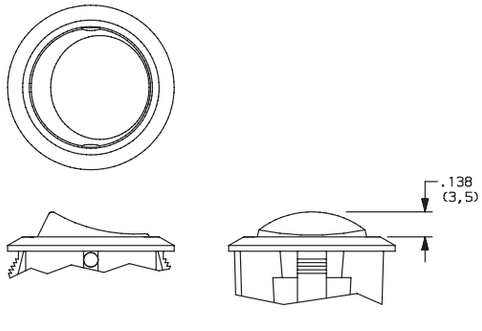

J2 TWO-TONE ROCKER

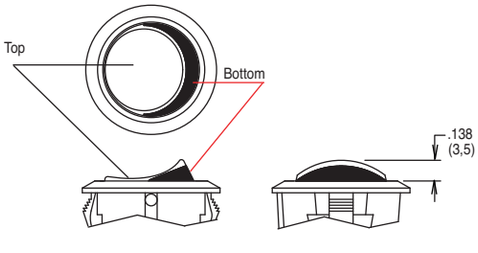

NOTE: J3 actuator available with the combination of 7 & 8 lamp ratings and CR102 switch function only.

Third Angle Projection

Dimensions are shown: Inches (mm)
Specifications and dimensions subject to change

ACTUATOR

J4 CIRCLE, ILLUMINATED ROCKER

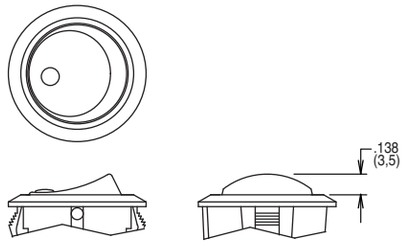

NOTE: Available with the combination of CR102 switch function and 7 & 8 lamp ratings only.

J5 OVAL, ILLUMINATED ROCKER

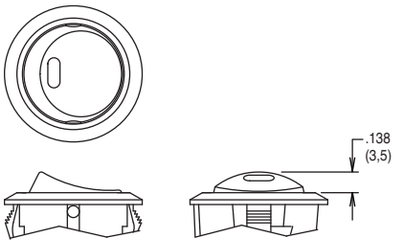

NOTE: Available with the combination of CR102 switch function and 6 lamp rating only.

JN PADDLE, ROCKER

JP PADDLE, ILLUMINATED ROCKER

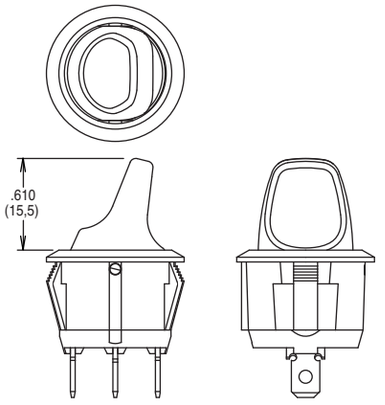

NOTE: JP actuator available with the combination of CR102 switch function and 7 & 8 lamp ratings only.

ACTUATOR COLOR

ACTUATOR	OPTION CODE	ACTUATOR COLOR
J1	2	BLACK
	1	WHITE
	3	RED
J3, J4 J5, JP	R	RED, ILLUMINATED
	A	AMBER, ILLUMINATED
	G	GREEN, ILLUMINATED

ACTUATOR	OPTION CODE	ACTUATOR COLOR TOP	ACTUATOR COLOR BOTTOM
J2	1	WHITE	RED
	2	WHITE	BLACK
	3	RED	WHITE
	4	BLACK	WHTE
	5	BLACK	RED

J2 actuator only

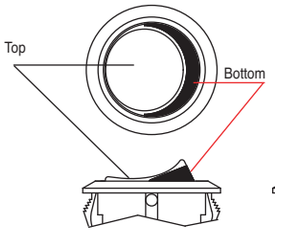

MOUNTING STYLE/COLOR

S2 SNAP-IN, BLACK

S1 SNAP-IN, WHITE

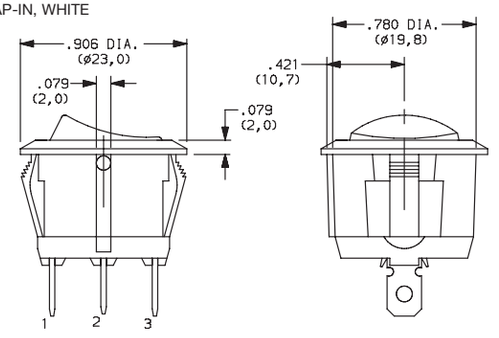

PANEL MOUNTING

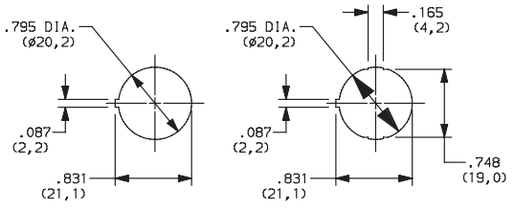

Panel thickness:
2.0 - 3.0 mm

Panel thickness:
0.7 - 3.0 mm

Third Angle Projection

Dimensions are shown: Inches (mm)
Specifications and dimensions subject to change

CR Series
Round Single Pole Specialty Rocker Switches

TERMINATION

15 .187" QUICK CONNECT

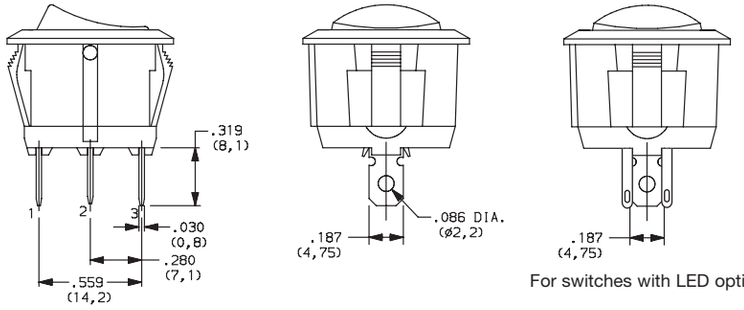

For switches with LED option

CONTACT MATERIAL

OPTION CODE	CONTACT AND TERMINAL MATERIAL	RATINGS	
QF	SILVER	POWER	16 AMPS @ 125 VAC; 10 AMPS @ 250 VAC

* Note: See Technical Data section of this catalog for RoHS compliant and compatible definitions and specifications.

LAMP RATING

(NONE) NO LAMP

6 LED RATING @ 10 mA V_f=1.85V

7 125 VAC 33kΩ NEON

8 250 VAC 150kΩ NEON

ACCESSORIES

377C00000 IP65 SPLASH PROOF RUBBER BOOT

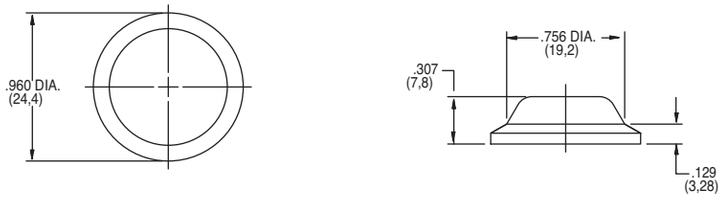

Third Angle Projection

Dimensions are shown: Inches (mm)
Specifications and dimensions subject to change

Features/Benefits

- ***Various designs up to 16 amps***
- ***Heavy duty and extended life cycles***
- ***SPST, SPDT and DPST options***
- ***Different symbols available***

Typical Applications

- ***Household appliances***
- ***Industrial equipment***
- ***Audio & visual equipment***
- ***Telecommunication***
- ***Office equipment***

Specifications

CONTACT RATING: 6.5 Amps @ 125 VAC
ELECTRICAL LIFE: 6,000 cycles at full load.
INITIAL CONTACT RESISTANCE: 100m Ω min.
INSULATION RESISTANCE: 100M Ω min.
DIELECTRIC STRENGTH: 1,500 VAC (50-60 Hz)
OPERATING FORCE: ON_OFF: 250 ± 100 gf
OFF_ON: 700 ± 250 gf
PACKAGING: 300 pieces per bag (5 trays)
2,400 pieces per box

Environmental

OPERATING TEMPERATURE: 0ºC to 65ºC

Materials

HOUSING: PA (UL 94V-2).
KNOB: PA (UL 94V-2).
CONTACTS: Silver plated.

NOTE: Specifications and materials listed above are for switches with standard options. For information on specific and custom switches, consult Customer Service Center.

PART NUMBER	HOUSING COLOR
SW-13A65N-A01	White
SW-13A65N-A01 BK	Black

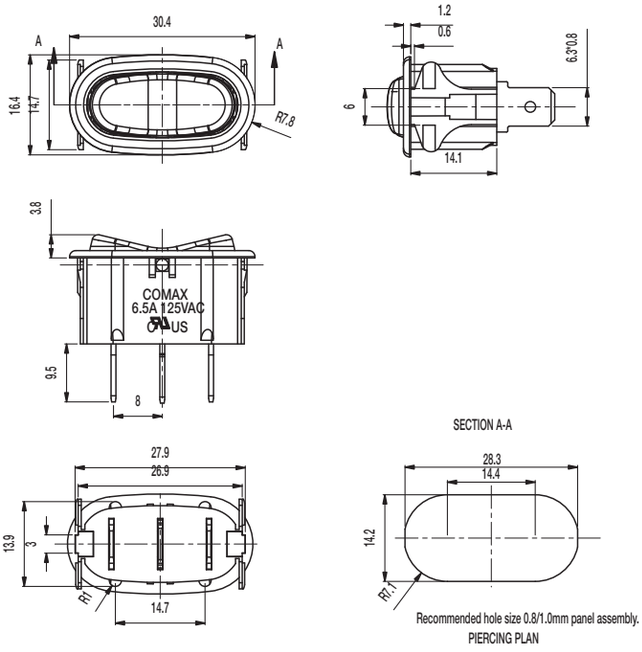

SPDT
ON-OFF-ON
Circuit

Dimensions are shown: mm
Specifications and dimensions subject to change

DIP
Product Selection Guide

DIP											
Series	**TDP**	**TDA**	**SDA**	**SD**	**BD**	**BPA**	**TDD**	**SPA**	**RTE**	**CD**	**CRD**
Switch Type	Half-pitch .050” Side actuated	Half-pitch .050”	Low Profile	Low Profile	Standard Profile	Side Actuated	Jumper Switch	Single In-line Package	Rotary & Coded	8 mm Coded Rotary	10 mm Coded Rotary
No. of Positions	2-10 (even only)	1 & 2-10 (even only)	1-12 (except 11)	2-12 (except 11)	1-12 (except 11)	1-12 (except 11)	1	2-10 (even only)	4 10,16	8, 10 & 16	10 & 16
Contact Style	SPST	SPST	SPST	SPST	SPST	SPST	SPDT	SPST	Coded	Coded	Coded
Profile off PCB	.173 (4,4)	.087 (2,2)	.189 (4,80) Thru-hole .177 (4,5) SMT	.168 (4,27) Thru-hole .160 (4,06) SMT	.297 (7,55) Vertical .380 (9,65) Rt. Angle	.287 (7.3) Thru-hole .277 (7,04) SMT	.090 (2,3)	.244 (6,2) Vertical .169 (4,3) Rt. Angle	.167 (4,25) Thru-hole .335 (8,5) Rt. angle	.168 (4,27) Thru-hole .340 (8,6) Rt. angle	.272 (6,9) Vertical .414 (10.5) Rt. angle
Process Sealed	washable with tape seal	washable with tape seal	washable (tape not required)	washable with tape seal	washable (tape not required)	washable (tape not required)	washable with tape seal	washable (tape not required)	NA	washable (tape not required)	washable (tape not required)
Extended Actuator	•		•	•	•	•		•	•		•
Flush Actuator	•	•	•	•			•	•	•	•	•
Thru-hole			•	•	•	•		•	•	•	•
Vertical		•	•	•	•		•	•	•	•	•
Right Angle	•				•	•		•	•	•	•
Surface Mount	•	•	•	•		•	•	•	•	•	•
Tape & Reel (SMT only)	•	•	•	•		•	•	•	•	•	•
Maximum Current	100mA	100mA	100mA	100mA	100mA	100mA	100mA	10mA	100mA	0.4VA	0.4VA
Retention Feature								•	•	• C option	
Page No.	H–3	H–6	H–9	H–13	H–16	H–18	H-21	H–23	H–25	H-31	H-35

TDP Series
Ultra-miniature Surface Mount
Half-pitch Side-Actuated DIP Switches

Features/Benefits

- ***World's first ultra-miniature SMT half-pitch side-actuated DIP***
- ***Side actuation allows visual indication of on/off position in horizontal applications***
- ***Process sealed for surface mount soldering and washable processing***
- ***RoHS compliant***
- ***Lead free***

Typical Applications

- ***Hand-held electronic devices***
- ***Portable computer and electronic devices***
- ***Instrumentation and controls***

Specifications

SWITCH FUNCTION: SPST — 2, 4, 6, 8, 10 positions.

CONTACT RATING:

24 V DC, 25 mA (switching).

50 V DC, 100 mA (steady state).

MECHANICAL AND ELECTRICAL LIFE: 1,000 cycles.

CONTACT RESISTANCE: 100 mΩ max.

INSULATION RESISTANCE: 100 MΩ @ 100 V DC min.

DIELECTRIC STRENGTH: 300 V AC min.

STORAGE TEMPERATURE: –40°C to 85°C.

OPERATING TEMPERATURE: –40°C to 85°C.

OPERATING FORCE: 4,9N max.

SOLDERABILITY: Per MIL-STD-202F method 208D, or EIA RS-186E method 9 (1 hour steam aging).

PACKAGING: Switches supplied in rigid dispensing tubes in full tube quantities only, this may affect order quantity. Tape and reel packaging also available.

Materials

CASE & COVER: glass filled PPS (UL94V-0).

ACTUATOR: PA6T (UL94V-0).

CONTACTS: Copper alloy with gold plate over nickel plate.

TERMINALS: Copper alloy, with gold over nickel plate.

All terminals are insert molded.

TAPE SEAL: Polyimide.

Note: Specifications and materials listed above are for switches with standard options. For information on specific and custom switches, consult Customer Service Center.

How To Order

The Build-A Switch concept allows you to mix and match options to create the switch you need. Below is a complete listing of options shown in catalog. To order, simply select desired option from each category and place in the appropriate box.

All switches supplied in "OFF" position.

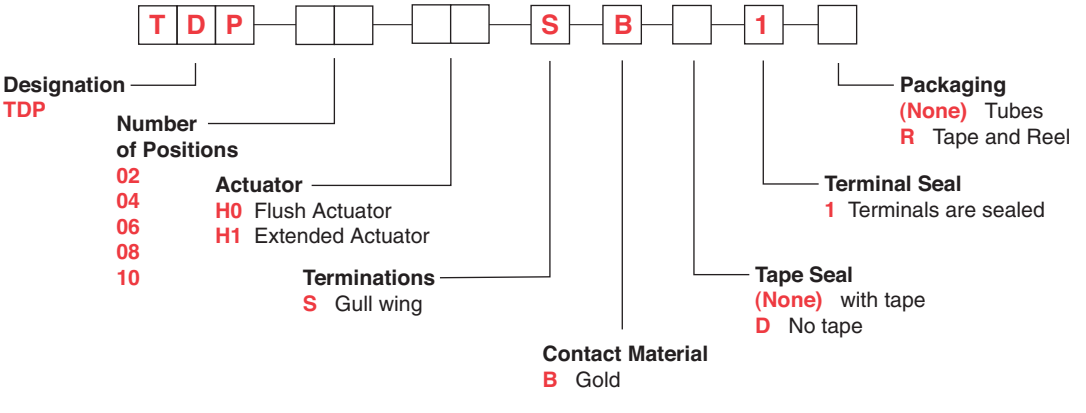

Note: Tape seal is not available with H1 Extended Actuators.

Third Angle Projection

Dimensions are shown: Inch (mm)
Specifications and dimensions subject to change

TDP Series
Ultra-miniature Surface Mount
Half-pitch Side-Actuated DIP Switches

Flush Actuator-No Top Tape, Surface Mount Terminals

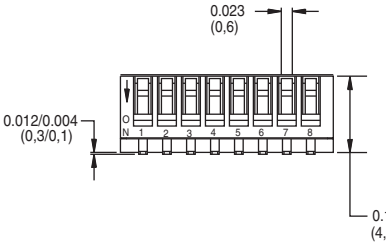

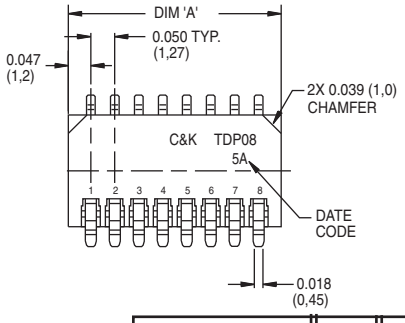

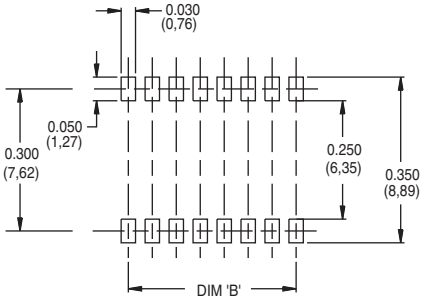

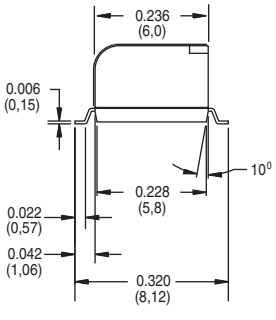

PART NUMBER	NO. POS.	DIM 'A'	DIM "B"	QUANTITY PER TUBE
TDP02H0SBD1	2	0.144 (3,67)	0.050 (1,27)	125
TDP04H0SBD1	4	0.244 (6,21)	0.150 (3,81)	70
TDP06H0SBD1	6	0.344 (8,74)	0.250 (6,35)	50
TDP08H0SBD1	8	0.444 (11,29)	0.350 (8,89)	40
TDP10H0SBD1	10	0.544 (13,82)	0.450 (11,43)	30

Schematic

SPST

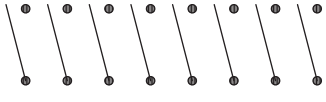

Flush Actuator-with Top Tape, Surface Mount Terminals

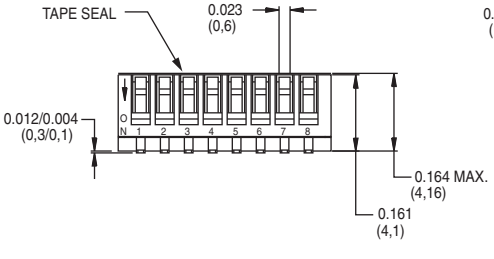

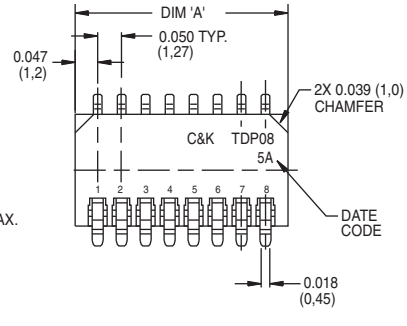

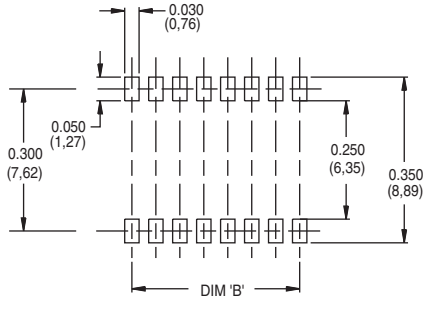

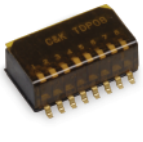

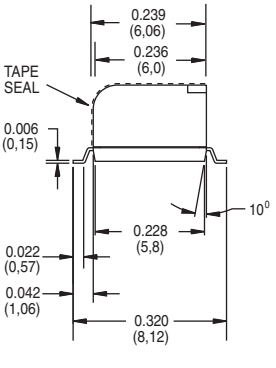

PART NUMBER	NO. POS.	DIM 'A'	DIM "B"	QUANTITY PER TUBE
TDP02H0SB1	2	0.144 (3,67)	0.050 (1,27)	125
TDP04H0SB1	4	0.244 (6,21)	0.150 (3,81)	70
TDP06H0SB1	6	0.344 (8,74)	0.250 (6,35)	50
TDP08H0SB1	8	0.444 (11,29)	0.350 (8,89)	40
TDP10H0SB1	10	0.544 (13,82)	0.450 (11,43)	30

Schematic

SPST

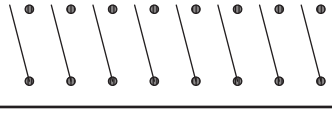

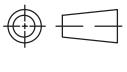

Third Angle Projection

Dimensions are shown: Inch (mm)
Specifications and dimensions subject to change

TDP Series
Ultra-miniature Surface Mount
Half-pitch Side-Actuated DIP Switches

Extended Actuator-No Top Tape, Surface Mount Terminals

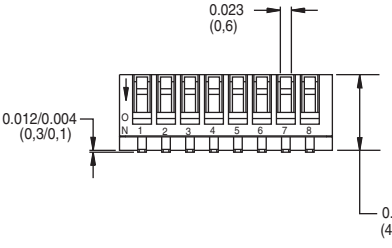

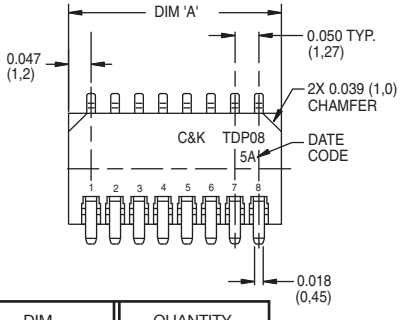

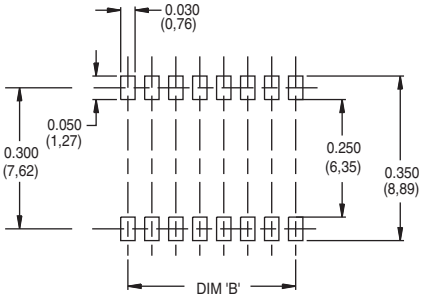

PART NUMBER	NO. POS.	DIM 'A'	DIM "B"	QUANTITY PER TUBE
TDP02H1SBD1	2	0.144 (3,67)	0.050 (1,27)	125
TDP04H1SBD1	4	0.244 (6,21)	0.150 (3,81)	70
TDP06H1SBD1	6	0.344 (8,74)	0.250 (6,35)	50
TDP08H1SBD1	8	0.444 (11,29)	0.350 (8,89)	40
TDP10H1SBD1	10	0.544 (13,82)	0.450 (11,43)	30

Schematic

SPST

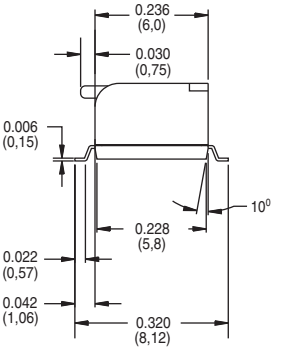

Tube Packaging

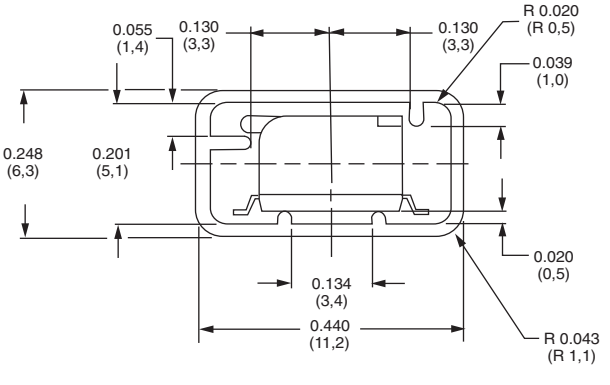

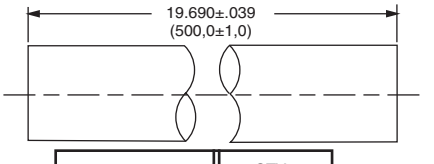

MODEL NUMBER	QTY IN TUBE
TDP02	125
TDP04	70
TDP06	50
TDP08	40
TDP10	30

Note: Switch shown has H1 extended actuator.

Tape and Reel Packaging

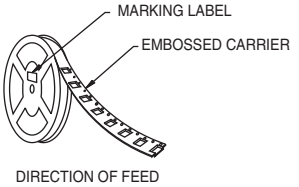

DIRECTION OF FEED

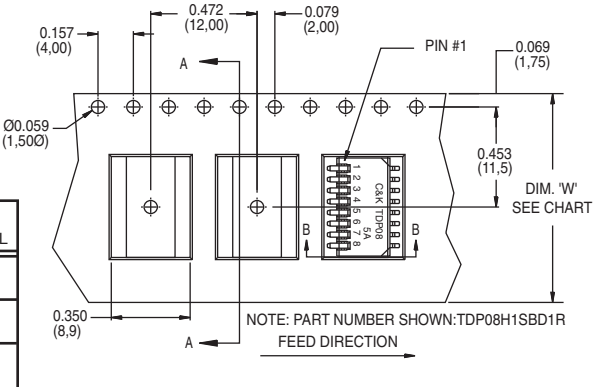

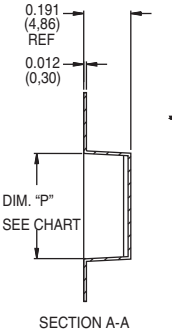

SECTION A-A

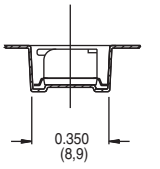

SECTION B-B

DIM PART NUMBER	DIM. 'W'	DIM "P"	PER REEL
TDP02	0.630 (16,0)	0.175 (4,45)	1,000
TDP04	0.630 (16,0)	0.276 (7,0)	1,000
TDP06	0.630 (16,0)	0.376 (9,55)	1,000
TDP08	0.945 (24,0)	0.476 (12,1)	1,000
TDP10	0.945 (24,0)	0.576 (14,65)	1,000

Third Angle Projection

Dimensions are shown: Inch (mm)
Specifications and dimensions subject to change

TDA Series
Ultra-miniature Surface Mount Half-pitch DIP Switches

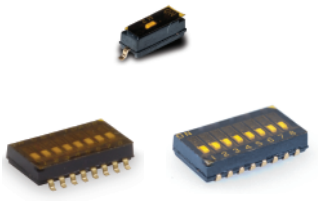

Features/Benefits

- ***Bifurcated contact for increased electrical reliability***
- ***Process sealed for surface mount soldering and washable processing***
- ***RoHS compliant***

Typical Applications

- ***Hand-held electronic devices***
- ***Portable computer and electronic devices***
- ***Instrumentation and controls***

Specifications

SWITCH FUNCTION: SPST – 1, 2, 4, 6, 8 & 10 positions.

CONTACT RATING:

24 V DC, 25 mA (switching).

50 V DC, 100 mA (steady state).

MECHANICAL AND ELECTRICAL LIFE: 1,000 cycles.

CONTACT RESISTANCE: 100 mΩ max.

INSULATION RESISTANCE: 100 MΩ @ 100 V DC min.

DIELECTRIC STRENGTH: 300 V AC min.

STORAGE TEMPERATURE: -40°C to 85°C.

OPERATING TEMPERATURE: -40°C to 85°C.

OPERATING FORCE: 4,9N max.

SOLDERABILITY: Per MIL-STD-202F method 208D, or EIA RS-186E method 9 (1 hour steam aging).

PACKAGING: Switches supplied in rigid dispensing tubes in full tube quantities only, this may affect order quantity. Numbers of switches per tube varies with model. Tape and reel packaging quantity varies with model.

Materials

CASE & COVER: PPS (UL94V-0)

ACTUATOR: LCP (UL94V-0).

CONTACTS: Copper alloy, with gold plate over nickel plate.

TERMINALS: Copper alloy, with gold flash over nickel plate.

All terminals are insert molded.

TAPE SEAL: Polyimide.

Note: Specifications and materials listed above are for switches with standard options. For information on specific and custom switches, consult Customer Service Center.

Note: All switches supplied in "OFF" position.

How To Order

The Build-A Switch concept allows you to mix and match options to create the switch you need. Below is a complete listing of options shown in catalog. To order, simply select desired option from each category and place in the appropriate box.

All switches supplied in "OFF" position.

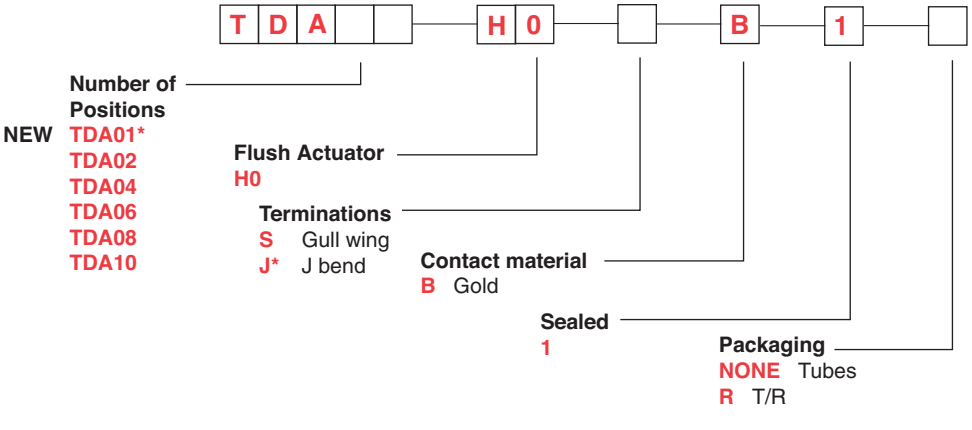

*** TDA01H0JB1R is not available, TDA01 only offered in tape & reel**

Third Angle Projection

Dimensions are shown: mm
Specifications and dimensions subject to change

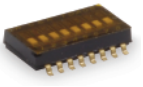

TDA08H0SB1

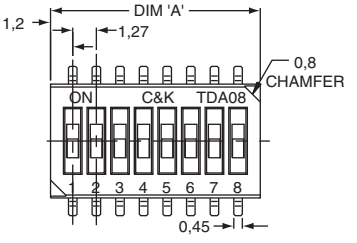

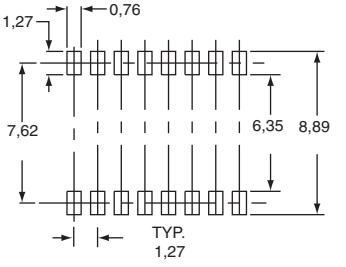

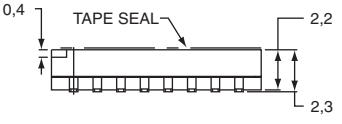

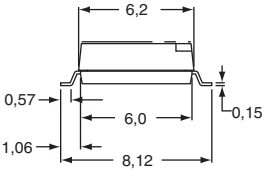

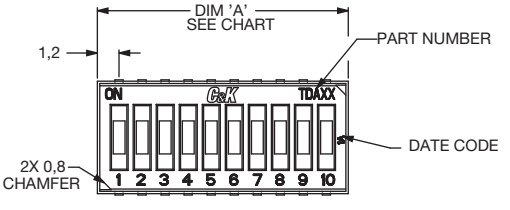

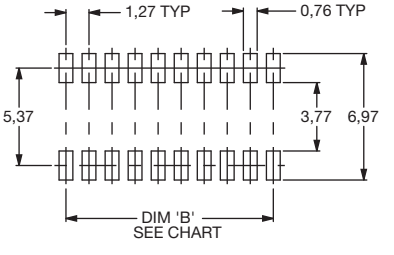

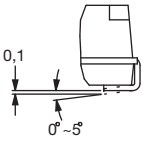

TDA10H0JB1

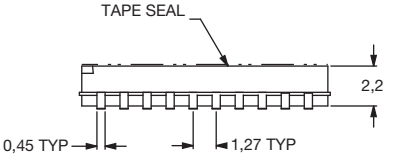

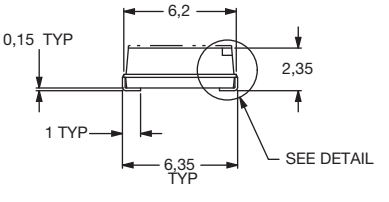

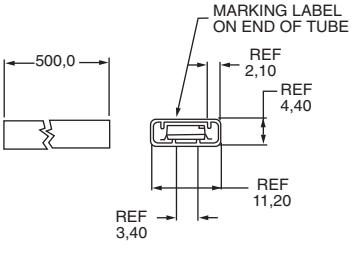

Tube Package

ROHS PART NUMBER	NO. POS.	DIM. 'A'	DIM. 'B	QUANTITY PER TUBE
TDA01H0SB1	1	2,40	NA	NA
TDA02H0_B1	2	3,67	1,27	125
TDA04H0_B1	4	6,21	3,81	70
TDA06H0_B1	6	8,75	6,35	50
TDA08H0_B1	8	11,29	8,89	40
TDA10H0_B1	10	13,83	11,43	30

Schematic

SPST

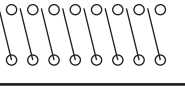

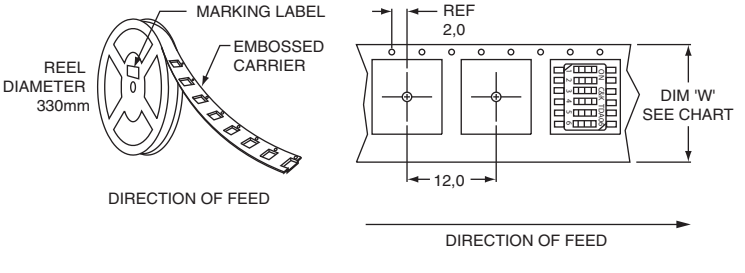

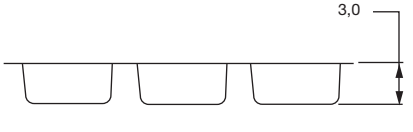

Tape & Reel Package

ROHS PART NUMBER	NO. POS.	DIM. 'W'	QUANTITY PER REEL
TDA01H0SB1R*	1	16,0	2500
TDA02H0_B1R	2	16,0	2000
TDA04H0_B1R	4	16,0	2000
TDA06H0_B1R	6	16,0	2000
TDA08H0_B1R	8	24,0	2000
TDA10H0_B1R	10	24,0	2000

* see next page for TDA01 tape & reel drawing

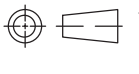

Third Angle Projection

Dimensions are shown: mm
Specifications and dimensions subject to change

TDA Series
Ultra-miniature Surface Mount Half-pitch DIP Switches

TDA01H0SB1R

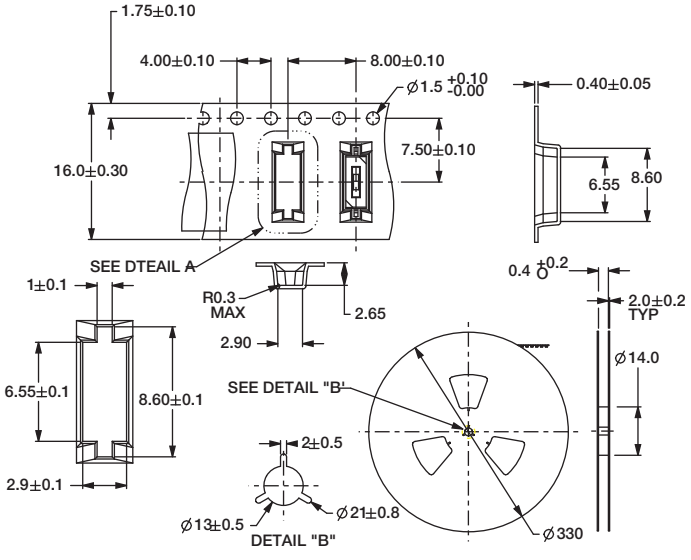

Third Angle Projection

Dimensions are shown: Inch (mm)
Specifications and dimensions subject to change

Features/Benefits

- *Low profile design saves space*
- *Thru-hole and surface mount models*
- *Tape and reel packaging available*
- *RoHS compliant*

Typical Applications

- *Address switch for industrial controls*
- *Logic switching for computers and peripherals*
- *Function controlling for numerous applications*

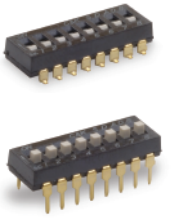

Specifications

CONTACT RATING: 25 mA @ 24 V DC or 100 mA @ 5 V DC.

MECHANICAL AND ELECTRICAL LIFE: 1,000 cycles at rated loads.

CONTACT RESISTANCE: 50 mΩ max. initial.

INSULATION RESISTANCE: 100 MΩ between terminals.

DIELECTRIC WITHSTANDING VOLTAGE: 300 V DC min. for 1 minute.

STORAGE TEMPERATURE: -40°C to 85°C.

OPERATING TEMPERATURE: -40°C to 85°C.

OPERATING FORCE: 800 grams max.

SOLDERABILITY: Dip and look solderability testing per C&K spec. #448. Unplated edges of terminals permitted.

PACKAGING: Switches supplied in rigid dispensing tubes in full-tube quantities only, this may affect order quantity. Numbers of switches per tube varies with model. Tape and reel packaging also available for surface mount options.

Materials

HOUSING: PPS, color black (UL94V-0).

COVER: PPS, color black (UL94V-0).

ACTUATOR: PA6T (UL94-0)

CONTACTS: Gold plated Beryllium copper.

TERMINALS: Gold plate over nickel plated brass.

TAPE SEAL: Polyimide.

Note: Specifications and materials listed above are for switches with standard options. For information on specific and custom switches, consult Customer Service Center. For Tin Lead options consult customer service center.

How To Order

The Build-A Switch concept allows you to mix and match options to create the switch you need. Below is a complete listing of options shown in catalog. To order, simply select desired option from each category and place in the appropriate box.

All switches supplied in “OFF” position..

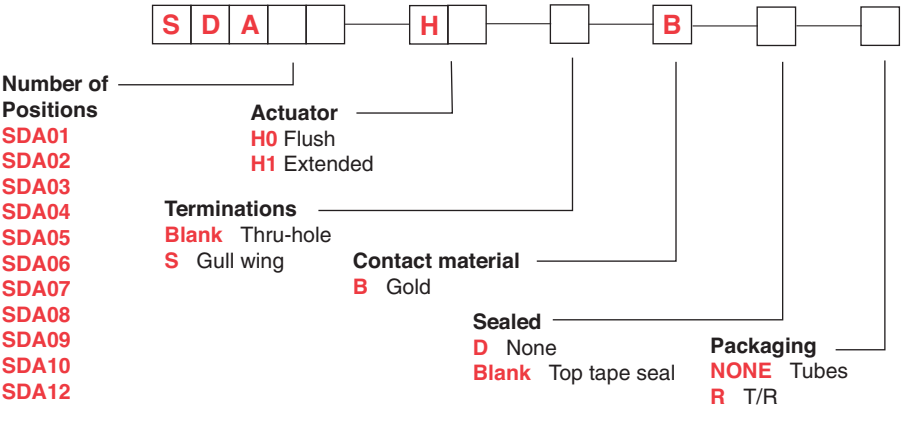

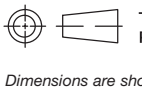

Dimensions are shown: Inch (mm)
Specifications and dimensions subject to change

SDA Series
Low Profile DIP Switches

Flush Actuator – No Tape, Thru-hole Terminals

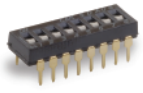

SDA08H0BD

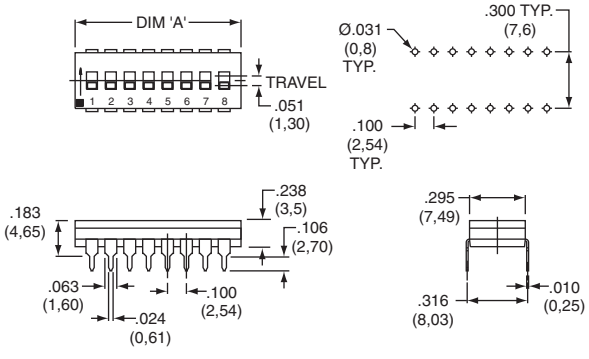

NOTE: SDA 01 options are 4,25mm thick

ROHS PART NUMBER	NO. POS.	DIM. 'A'	QUANTITY PER TUBE
SDA01H0BD	1	.178 (4,52)	100
SDA02H0BD	2	.278 (7,06)	60
SDA03H0BD	3	.378 (9,60)	45
SDA04H0BD	4	.476 (12,10)	35
SDA05H0BD	5	.578 (14,68)	30
SDA06H0BD	6	.676 (17,18)	25
SDA07H0BD	7	.778 (19,76)	20
SDA08H0BD	8	.876 (22,26)	20
SDA09H0BD	9	.978 (24,84)	15
SDA10H0BD	10	1.076 (27,34)	15
SDA12H0BD	12	1.279 (32,50)	14

Schematic

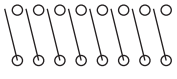

SPST

Flush Actuator – With Top Tape, Thru-hole Terminals

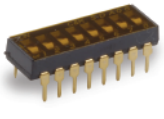

SDA08H0B

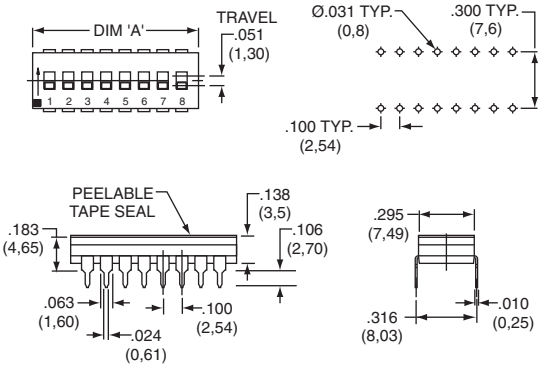

NOTE: SDA 01 options are 4,25mm thick

ROHS PART NUMBER	NO. POS.	DIM. 'A'	QUANTITY PER TUBE
SDA01H0B	1	.178 (4,52)	100
SDA02H0B	2	.278 (7,06)	60
SDA03H0B	3	.378 (9,60)	45
SDA04H0B	4	.476 (12,10)	35
SDA05H0B	5	.578 (14,68)	30
SDA06H0B	6	.676 (17,18)	25
SDA07H0B	7	.778 (19,76)	20
SDA08H0B	8	.876 (22,26)	20
SDA09H0B	9	.978 (24,84)	15
SDA10H0B	10	1.076 (27,34)	15
SDA12H0B	12	1.279 (32,50)	14

Schematic

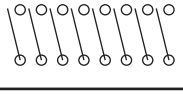

SPST

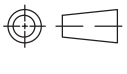

Third Angle Projection

Dimensions are shown: Inch (mm)
Specifications and dimensions subject to change

Flush Actuator – With Top Tape, Surface Mount Terminals

ROHS PART NUMBER	NO. POS.	DIM. 'A'	QUANTITY PER TUBE
SDA01H0SB	1	.178 (4,52)	100
SDA02H0SB	2	.278 (7,06)	60
SDA03H0SB	3	.378 (9,60)	45
SDA04H0SB	4	.476 (12,10)	35
SDA05H0SB	5	.578 (14,68)	30
SDA06H0SB	6	.676 (17,18)	25
SDA07H0SB	7	.778 (19,76)	20
SDA08H0SB	8	.876 (22,26)	20
SDA09H0SB	9	.978 (24,84)	15
SDA10H0SB	10	1.076 (27,34)	15
SDA12H0SB	12	1.279 (32,50)	14

Schematic

SPST

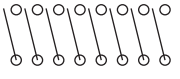

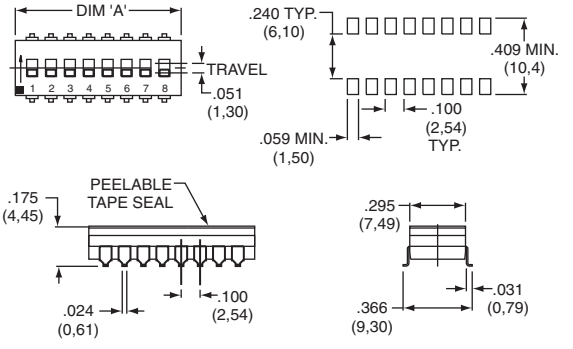

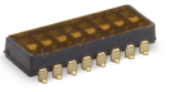

SDA08H0SB

NOTE: SDA 01 options are 4,25mm thick

Flush Actuator – No Tape, Surface Mount Terminals

ROHS PART NUMBER	NO. POS.	DIM. 'A'	QUANTITY PER TUBE
SDA01H0SBD	1	.178 (4,52)	100
SDA02H0SBD	2	.278 (7,06)	60
SDA03H0SBD	3	.378 (9,60)	45
SDA04H0SBD	4	.476 (12,10)	35
SDA05H0SBD	5	.578 (14,68)	30
SDA06H0SBD	6	.676 (17,18)	25
SDA07H0SBD	7	.778 (19,76)	20
SDA08H0SBD	8	.876 (22,26)	20
SDA09H0SBD	9	.978 (24,84)	15
SDA10H0SBD	10	1.076 (27,34)	15
SDA12H0SBD	12	1.279 (32,50)	14

Schematic

SPST

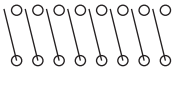

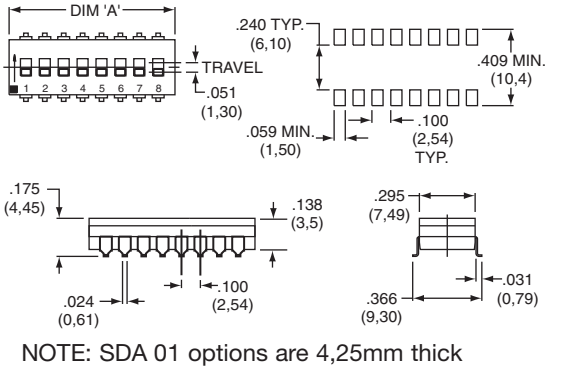

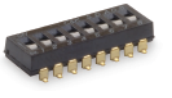

SDA08H0SBD

NOTE: SDA 01 options are 4,25mm thick

Extended Actuator – No Top Tape, Thru-hole Terminals

SDA08H1BD

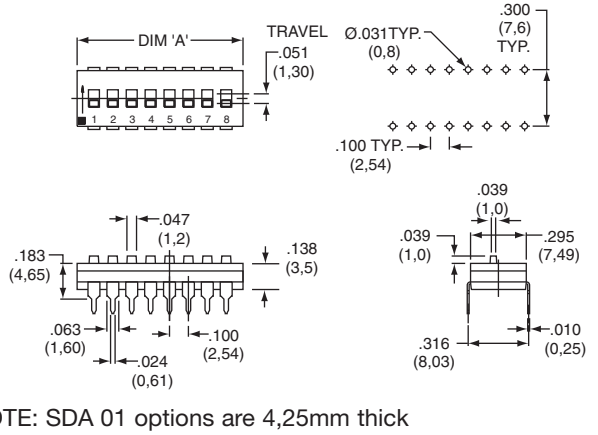

NOTE: SDA 01 options are 4,25mm thick

ROHS PART NUMBER	NO. POS.	DIM. 'A'	QUANTITY PER TUBE
SDA01H1BD	1	.178 (4,52)	100
SDA02H1BD	2	.278 (7,06)	60
SDA03H1BD	3	.378 (9,60)	45
SDA04H1BD	4	.476 (12,10)	35
SDA05H1BD	5	.578 (14,68)	30
SDA06H1BD	6	.676 (17,18)	25
SDA07H1BD	7	.778 (19,76)	20
SDA08H1BD	8	.876 (22,26)	20
SDA09H1BD	9	.978 (24,84)	15
SDA10H1BD	10	1.076 (27,34)	15
SDA12H1BD	12	1.279 (32,50)	14

Schematic

SPST

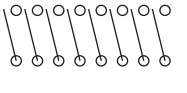

Third Angle Projection

Dimensions are shown: Inch (mm)
Specifications and dimensions subject to change

SDA Series
Low Profile DIP Switches

Extended Actuator – No Top Tape, Surface Mount Terminals

SDA08H1SBD

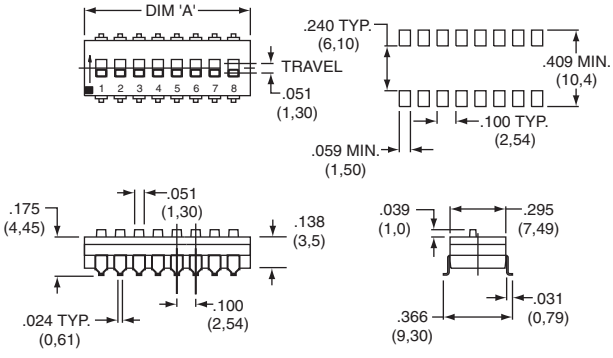

NOTE: SDA 01 options are 4,25mm thick

ROHS PART NUMBER	NO. POS.	DIM. 'A'	QUANTITY PER TUBE
SDA01H1SBD	1	.178 (4,52)	100
SDA02H1SBD	2	.278 (7,06)	60
SDA03H1SBD	3	.378 (9,60)	45
SDA04H1SBD	4	.476 (12,10)	35
SDA05H1SBD	5	.578 (14,68)	30
SDA06H1SBD	6	.676 (17,18)	25
SDA07H1SBD	7	.778 (19,76)	20
SDA08H1SBD	8	.876 (22,26)	20
SDA09H1SBD	9	.978 (24,84)	15
SDA10H1SBD	10	1.076 (27,34)	15
SDA12H1SBD	12	1.279 (32,50)	14

Schematic

SPST

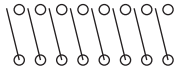

Tape & Reel Packaging – Surface Mount Options only

MODEL NO. 'S' OPTION		DIM. 'H' (REF.)	DIM. 'W1' (REF.)	DIM. 'W2' (REF.)	DIM. 'B' (REF.)	DIM. 'C' (REF.)	DIM. 'D' (REF.)	QUANTITY PER REEL
SDA01	H0	5.2	24.0	24.4	8.5	11.5	N/A	1500
	H1	5.8						1450
SDA02	H0	4.8	24.0	24.4	7.9	11.5	N/A	750
	H1	5.8						700
SDA03	H0	4.8	24.0	24.4	10.4	11.5	N/A	750
	H1	5.8						700
SDA04	H0	4.8	24.0	24.4	12.9	11.5	N/A	750
	H1	5.8						700
SDA05	H0	4.8	24.0	24.4	15.4	11.5	N/A	750
	H1	5.8						700
SDA06	H0	4.8	32.0	32.4	18.0	14.2	28.4	750
	H1	5.8						700
SDA07	H0	4.8	32.0	32.4	20.5	14.2	28.4	750
	H1	NOT CURRENTLY AVAILABLE IN TAPE AND REEL						
SDA08	H0	4.8	44.0	44.4	22.7	20.2	40.4	750
	H1	5.8						700
SDA09	H0	4.8	44.0	44.4	25.5	20.2	40.4	750
	H1	5.8						700
SDA10	H0	4.8	44.0	44.0	28.1	20.2	40.4	750
	H1	5.8						700
SDA12	H0	4.8	44.0	44.4	33.2	20.2	40.4	750
	H1	NOT CURRENTLY AVAILABLE IN TAPE AND REEL						

SDA01H1SBDR OPTION SHOWN

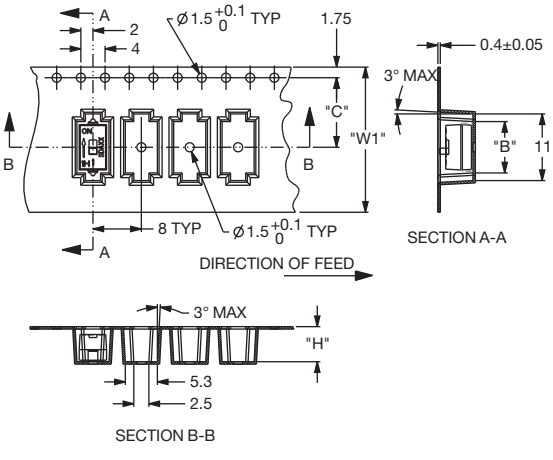

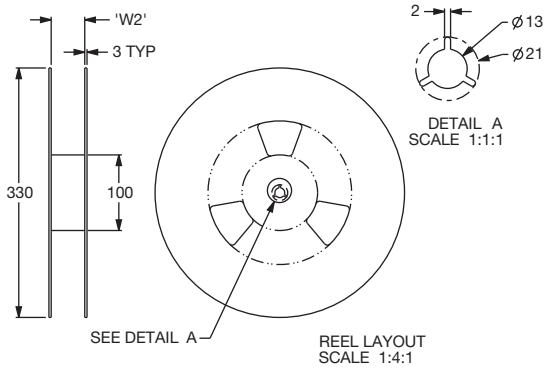

2-5 OPTION
SDA04 SHOWN

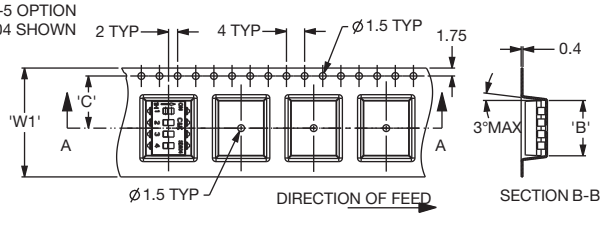

6-12 OPTION
SDA08 SHOWN

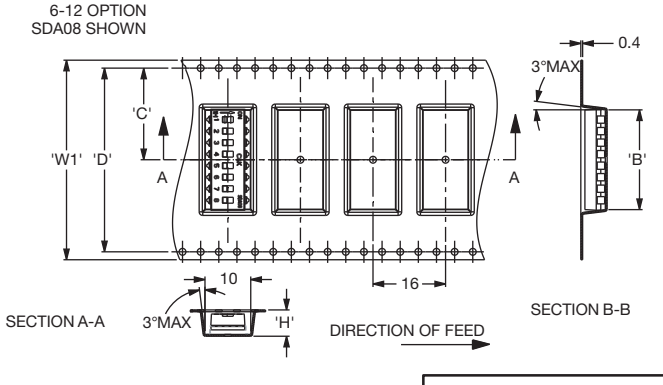

Third Angle Projection

Dimensions are shown: Inch (mm)
Specifications and dimensions subject to change

Features/Benefits

- *Low profile design saves space*
- *Thru-hole and surface mount models*
- *Tape and reel packaging available*
- *Sealed with top tape*
- *RoHS compliant*

Typical Applications

- *Address switch for industrial controls*
- *Logic switching for computers and peripherals*
- *Function controlling for numerous applications*

Specifications

SWITCH FUNCTION: SPST - 2, 3, 4, 5, 6, 7, 8, 9, 10 & 12 positions

CONTACT RATING:

Carry: 100 mA @ 50 V DC max.

Switch: 0.1 mA @ 5 V DC min to 100 mA @ 25 V DC max.

MECHANICAL AND ELECTRICAL LIFE: 2,000 make-and-break cycles at full load, each circuit.

CONTACT RESISTANCE: Below 50 milliohms typ. initial @ 2-4 V DC, 100mA.

INSULATION RESISTANCE: 10^9 ohms min.

DIELECTRIC STRENGTH: 500 V RMS min. @ sea level between adjacent terminals.

STORAGE TEMPERATURE: -40°C to 85°C.

OPERATING TEMPERATURE: -40°C to 85°C.

OPERATING FORCE: 100-700g inital.

PACKAGING: Thru-hole switches supplied in rigid dispensing tubes in full-tube quantities only: this may effect order quantity. Surface mount switches available in tape and reel packaging by added 'R' to end of part number; 1,000 pieces per reel. Switch position 1 denotes pin number 1. All switch actuators in 'OFF' position, standard.

Materials

CASE & COVER: (PPA), flame retardant (UL 94V-0)

ACTUATOR: Nylon, flame retardant (UL 94V-0)

CONTACTS: BeCu with gold plate.

TERMINALS: Bright tin-plated brass.

TERMINAL SEAL: All terminals insert molded.

TAPE SEAL: Polyimide.

Note: Specifications and materials listed above are for switches with standard options. For information on specific and custom switches, consult Customer Service Center.

How To Order

The Build-A Switch concept allows you to mix and match options to create the switch you need. Below is a complete listing of options shown in catalog. To order, simply select desired option from each category and place in the appropriate box.

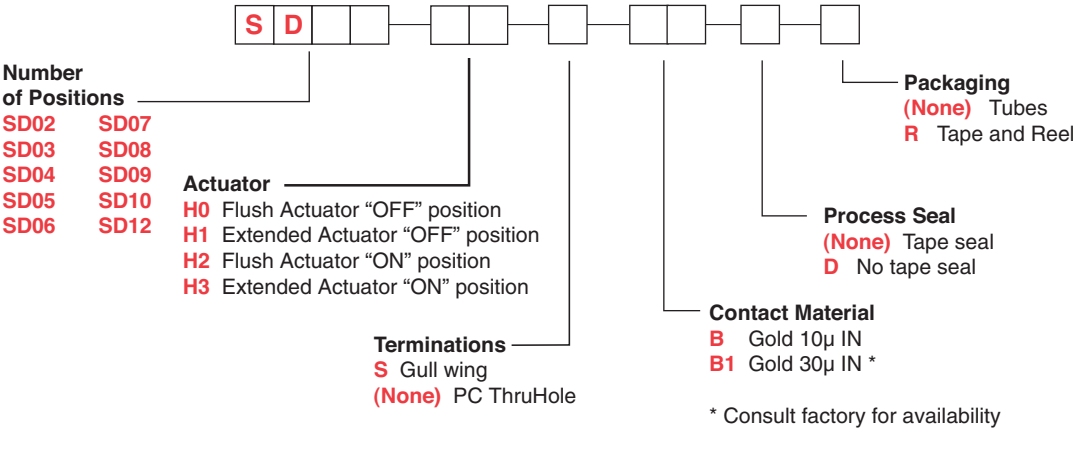

Third Angle Projection

Dimensions are shown: Inch (mm)
Specifications and dimensions subject to change

SD Series
Low Profile DIP Switches

Sealed Flush Actuator – With Top Tape, Thru-hole Terminals

Process sealed - withstands soldering and cleaning processes

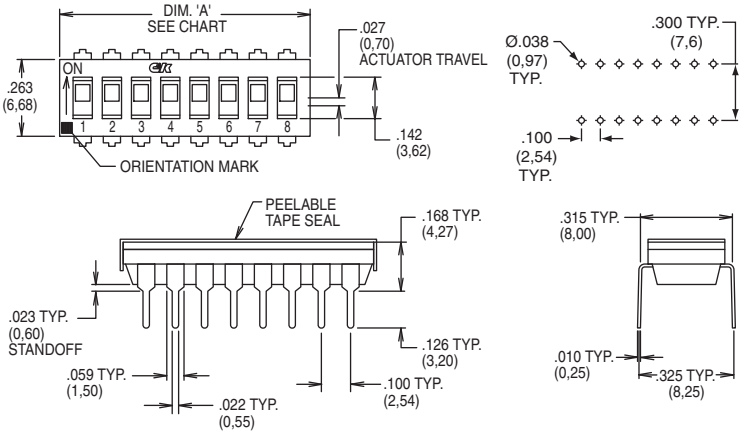

ROHS PART NUMBER	NO. POS.	DIM. 'A'	QUANTITY PER TUBE
SD02H0B	2	.258 (6,55)	85
SD03H0B	3	.358 (9,09)	60
SD04H0B	4	.458 (11,63)	45
SD05H0B	5	.558 (14,17)	40
SD06H0B	6	.658 (16,71)	30
SD07H0B	7	.758 (19,25)	25
SD08H0B	8	.858 (21,79)	25
SD09H0B	9	.958 (24,33)	20
SD10H0B	10	1.058 (26,87)	20
SD12H0B	12	1.258 (31,95)	15

Schematic

SPST

Table applicable to "H0" and "H2" actuator options.

Sealed Flush Actuator – With Top Tape, Surface Mount Terminals

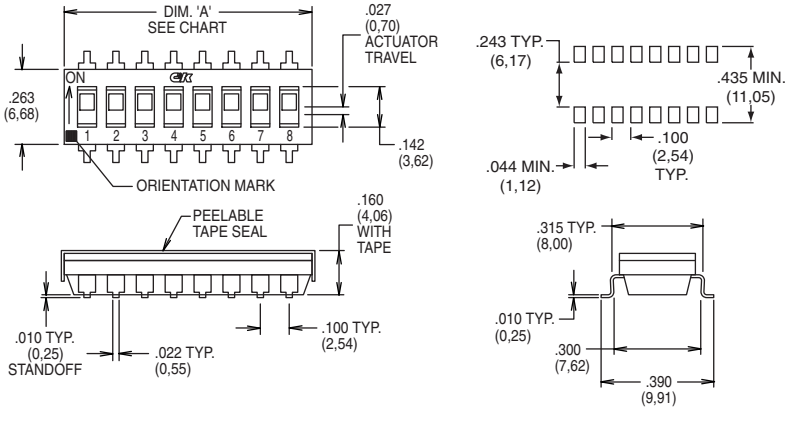

RoHS PART NUMBER	NO. POS.	DIM. 'A'	QUANTITY PER TUBE
SD02H0SB	2	.258 (6,55)	85
SD03H0SB	3	.358 (9,09)	60
SD04H0SB	4	.458 (11,63)	45
SD05H0SB	5	.558 (14,17)	40
SD06H0SB	6	.658 (16,71)	30
SD07H0SB	7	.758 (19,25)	25
SD08H0SB	8	.858 (21,79)	25
SD09H0SB	9	.958 (24,33)	20
SD10H0SB	10	1.058 (26,87)	20
SD12H0SB	12	1.258 (31,95)	15

Schematic

SPST

Table applicable to "H0" and "H2" actuator options.

Sealed Extended Actuator – With Top Tape, Thru-hole Terminals

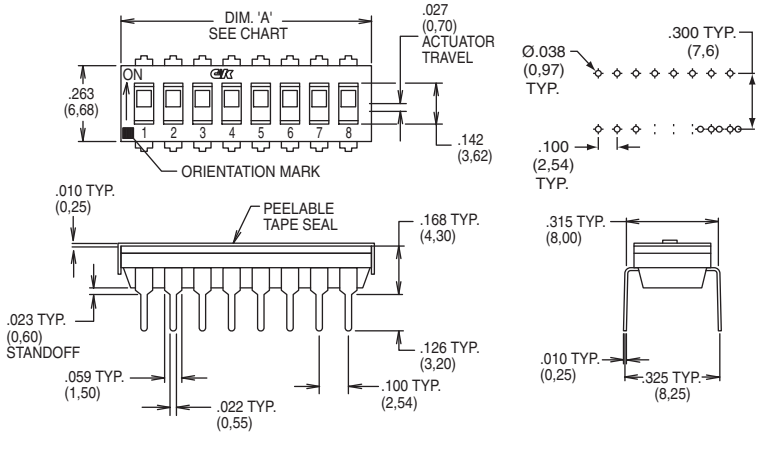

RoHS PART NUMBER	NO. POS.	DIM. 'A'	QUANTITY PER TUBE
SD02H1B	2	.258 (6,55)	85
SD03H1B	3	.358 (9,09)	60
SD04H1B	4	.458 (11,63)	45
SD05H1B	5	.558 (14,17)	40
SD06H1B	6	.658 (16,71)	30
SD07H1B	7	.758 (19,25)	25
SD08H1B	8	.858 (21,79)	25
SD09H1B	9	.958 (24,33)	20
SD10H1B	10	1.058 (26,87)	20
SD12H1B	12	1.258 (31,95)	15

Schematic

SPST

Table applicable to "H1" and "H3" actuator options.

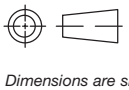

Third Angle Projection

Dimensions are shown: Inch (mm)
Specifications and dimensions subject to change

Sealed Extended Actuator – With Top Tape, Surface Mount Terminals

RoHS PART NUMBER	NO. POS.	DIM. 'A'	QUANTITY PER TUBE
SD02H1SB	2	.258 (6,55)	85
SD03H1SB	3	.358 (9,09)	60
SD04H1SB	4	.458 (11,63)	45
SD05H1SB	5	.558 (14,17)	40
SD06H1SB	6	.658 (16,71)	30
SD07H1SB	7	.758 (19,25	25
SD08H1SB	8	.858 (21,79)	25
SD09H1SB	9	.958 (24,33)	20
SD10H1SB	10	1.058 (26,87)	20
SD12H1SB	12	1.258 (31,95)	15

Schematic

SPST

Table applicable to "H1" and "H3" actuator options.

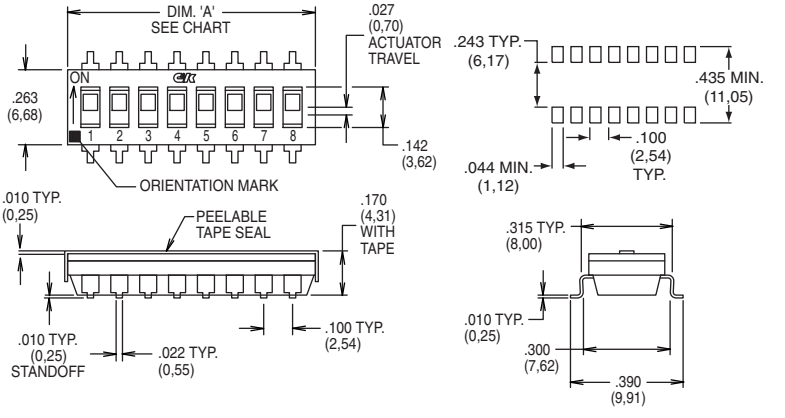

TAPE & REEL PACKAGING – SURFACE MOUNT OPTIONS ONLY

RoHS PART NUMBER	NO. POS.	DIM. 'A'	QUANTITY PER REEL
SD02H0SBR	2	.258 (6,55)	1000
SD03H0SBR	3	.358 (9,09)	1000
SD04H0SBR	4	.458 (11,63)	1000
SD05H0SBR	5	.558 (14,17)	1000
SD06H0SBR	6	.658 (16,71)	1000
SD07H0SBR	7	.758 (19,25	1000
SD08H0SBR	8	.858 (21,79)	1000
SD09H0SBR	9	.958 (24,33)	1000
SD10H0SBR	10	1.058 (26,87)	1000
SD12H0SBR	12	1.258 (31,95)	1000

Schematic

SPST

Table applicable to "H0" and "H2" actuator options.

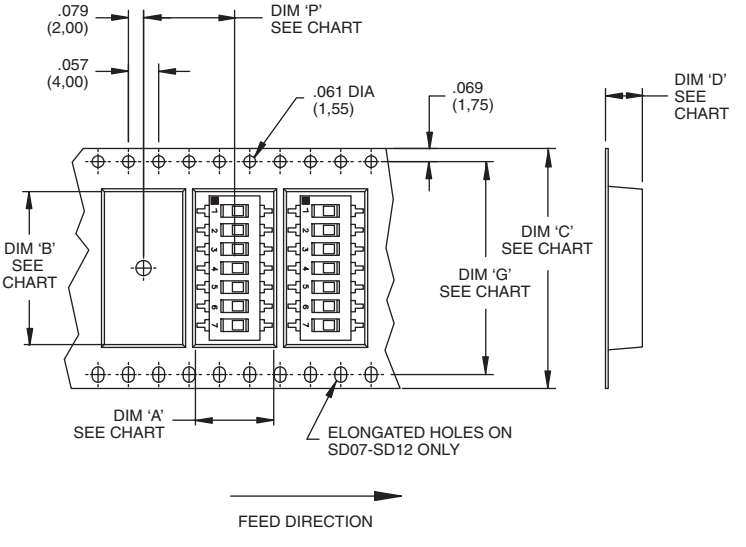

SWITCH NO.	DIM 'A' POCKET LENGTH @ BOTTOM	DIM 'B' POCKET LENGTH @ BOTTOM	DIM 'C' TAPE WIDTH	DIM 'D' POCKET DEPTH	DIM 'G' SPROCKET HOLE SPACING	DIM 'P' PITCH BETWEEN POCKETS
SD02	.413(10,5)	.315(8,0)	.630(16,0)	.177(4,5)	N/A	.472(12,0)
SD03	.406(10,3)	.406(10,3)	.630(16,0)	.177(4,5)	N/A	.472(12,0)
SD04	.429(10,9)	.476(12,1)	.954(24,0)	.177(4,5)	N/A	.472(12,0)
SD05	.406(10,3)	.602(15,3)	.954(24,0)	.177(4,5)	N/A	.472(12,0)
SD06	.406(10,3)	.701(17,8)	.954(24,0)	.177(4,5)	N/A	.472(12,0)
SD07	.406(10,3)	.803(20,4)	1.260(32,0)	.177(4,5)	1.118(28,4)	.472(12,0)
SD08	.406(10,3)	.854(21,7)	1.732(44,0)	.177(4,5)	1.591(40,4)	.472(12,0)
SD09	.406(10,3)	1.028(26,1)	1.732(44,0)	.177(4,5)	1.591(40,4)	.472(12,0)
SD10	.406(10,3)	1.055(26,8)	1.732(44,0)	.177(4,5)	1.591(40,4)	.472(12,0)
SD12	.406(10,3)	1.303(33,1)	1.732(44,0)	.177(4,5)	1.591(40,4)	.472(12,0)

Reel Information

Outside diameter 13.00 (333,0)
Pilot hole .512 (13,0)

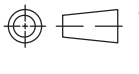

Third Angle Projection

Dimensions are shown: Inch (mm)
Specifications and dimensions subject to change

BD Series
Standard Profile DIP Switches

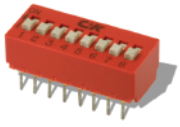

Features/Benefits

- ***Traditional full profile DIP switch***
- ***Extended actuator for easy actuation***
- ***Open bottom construction allows for solder washing without the need for tape seal***
- ***RoHS compliant***

Typical Applications

- ***Address switch for industrial controls***
- ***Logic switching for computers and peripherals***
- ***Function controlling for numerous applications***

Specifications

SWITCH FUNCTION: SPST - 1 thru 12 position available (except 11 position).

CONTACT RATING:

Carry: 100 mA max. @ 50 V DC.

Switch: 100 mA max. @ 5 V DC or 25 mA max. @ 25 V DC.

MECHANICAL AND ELECTRICAL LIFE: 10,000 make-and-break cycles at full load, each circuit.

CONTACT RESISTANCE: Below 50 milliohms typ. initial @ 2-4 V DC 100mA.

INSULATION RESISTANCE: 10^9 ohms min.

DIELECTRIC STRENGTH: 500 V RMS min. @ sea level between adjacent terminals.

CAPACITANCE: 5pF max. between adjacent terminals.

STORAGE & OPERATING TEMPERATURE: -40°C to 85°C.

SHOCK: Withstands 20g 11 ms sawtooth waveform with no contact opening greater than 10 microseconds.

VIBRATION: No contact opening greater than 10 microseconds and no contact closure when exposed to vibration .06 in DA or 5g, whichever is less, from 10 to 55 Hz, and 10g from 55 to 500 Hz.

SOLDERABILITY: Per MIL-STD-202F method 208D, or EIA RS-186E method 9 (1 hour steam aging).

PACKAGING: Switches supplied in rigid dispensing tubes in full-tube quantities only: this may effect order quantity. Number of switches per tube varies with model. Switch position 1 denotes pin number 1. All switch actuators in 'OFF' position, standard.

Materials

CASE & COVER: Glass filled polyester (PBT), flame retardant (UL 94V-0).

ACTUATOR: Glass filled nylon 6/6, flame retardant, heat stabilized (UL 94V-0)

CONTACTS: Gold over nickel over phosphor bronze.

TERMINALS: Matte-tin over nickel over phosphor bronze.

Note: Specifications and materials listed above are for switches with standard options. For information on specific and custom switches, consult Customer Service Center.

Vertical Full Profile DIP

BD08

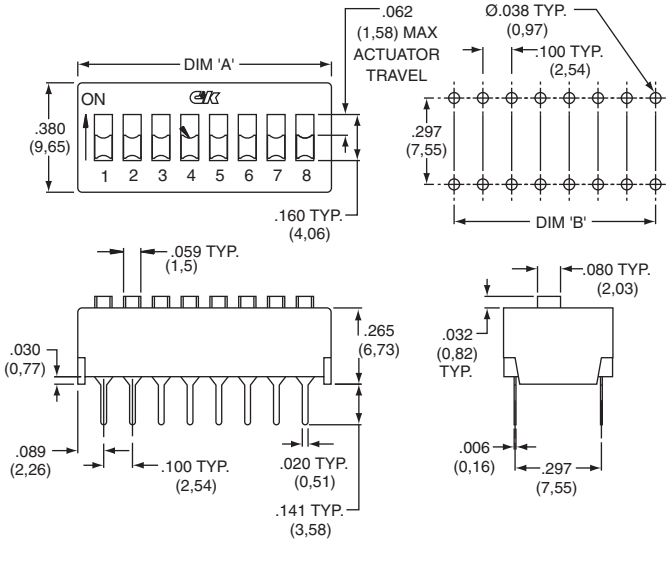

PART NUMBER	NO.POS.	DIM. 'A'	DIM. 'B'	QUANTITY PER TUBE
BD01	1	.180 (4,57)	NA	115
BD02	2	.280 (7,11)	.100 (2,54)	74
BD03	3	.380 (9,65)	.200 (5,08)	54
BD04	4	.480 (12,19)	.300 (7,62)	43
BD05	5	.580 (14,73)	.400 (10,16)	35
BD06	6	.680 (17,27)	.500 (12,75)	30
BD07	7	.780 (19,81)	.600 (15,24)	26
BD08	8	.880 (22,35)	.700 (17,78)	23
BD09	9	.980 (24,89)	.800 (20,32)	21
BD10	10	1.080 (27,43)	.900 (22,.86)	19
BD12	12	1.280 (32,51)	1.100 (27,94)	16

Schematic

SPST

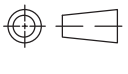

Third Angle Projection

Dimensions are shown: Inch (mm)
Specifications and dimensions subject to change

Open Base and AV Right Angle Terminal Style

PART NUMBER	NO.POS.	DIM. 'A'	QUANTITY PER TUBE
BD02AV	2	.280 (7,11)	72
BD03AV	3	.380 (9,65)	52
BD04AV	4	.480 (12,19)	42
BD05AV	5	.580 (14,73)	35
BD06AV	6	.680 (17,27)	29
BD07AV	7	.780 (19,81)	26
BD08AV	8	.880 (22,35)	23
BD09AV	9	.980 (24,89)	20
BD10AV	10	1.080 (27,43)	18
BD12AV	12	1.280 (32,51)	15

Schematic

SPST

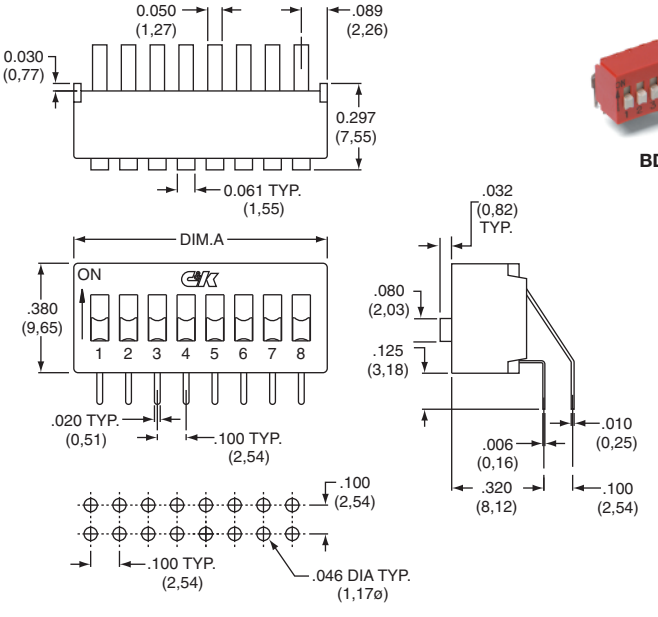

BD08AV

Installation, Soldering and Cleaning

All BD Series Standard Profile DIP Switches can be hand soldered or machine soldered without the use of boot, caps, tapes or special attention. Open base washable models have unique design, allowing solvent cleaners and water/detergent solutions to flush and clean the electrical contacts of the contaminants and fluxes. For best results, follow these directions:

1) Wave soldering recommended at 500° F (260°C) solder temperature.
2) Hand solder using 30 watt small tip iron controlled at 500° F (260°C), 10 seconds max./terminal.
3) Open base washable models: Clean flux using forced rinse, high agitation or triple bath cleaning method. DO NOT mask or cover switch in any way during cleaning. Switch is designed for easy solvent flush out.
4) All switch actuators must be in 'OFF' position during soldering and cleaning processes.

Third Angle Projection

Dimensions are shown: Inch (mm)
Specifications and dimensions subject to change

BPA Series
Side Actuated DIP Switches

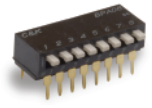

Features/Benefits

- ***Side actuated contacts***
- ***Available in thru-hole or SMT models***
- ***High pressure contact system does not require tape seal for washing***
- ***RoHS compliant & compatible***

Typical Applications

- ***Address switch for industrial controls***
- ***Logic switching for computers and peripherals***
- ***Function controlling for numerous applications***

Specifications

SWITCH FUNCTION: 1 thru 10 and 12 position available.

CONTACT RATING: 100 mA max. @ 5 V DC or 25 mA max. @ 24 V DC.

MECHANICAL AND ELECTRICAL LIFE: 1,000 cycles min. @ 5 V DC 10mA.

CONTACT RESISTANCE: 50 milliohms initial max.

INSULATION RESISTANCE: 100 V DC 100 megohms min.

DIELECTRIC WITHSTAND VOLTAGE: 300 V AC for 1 minute.

STORAGE TEMPERATURE: -40°C to 85°C.

OPERATING TEMPERATURE: -20°C to 85°C.

OPERATING FORCE: 800 grams max.

SOLDERABILITY: Flow solderable and washable (soldering: 260°C for 10 sec. max.)

PACKAGING: Switches supplied in rigid dispensing tubes in full-tube quantities only, this may affect order quantity. Numbers of switches per tube varies with model. Tape and reel packaging available for SMT options.

Materials

HOUSING: PPS, color black (UL94V-0).
COVER: PPS, color black (UL94V-0).
ACTUATOR: PA-6T UL94V-0).

CONTACTS: Beryllium Copper with Gold over Nickel plate.

TERMINALS: Brass, Gold over Nickel plate.

Note: Specifications and materials listed above are for switches with standard options. For information on specific and custom switches, consult Customer Service Center.

How To Order

The Build-A Switch concept allows you to mix and match options to create the switch you need. Below is a complete listing of options shown in catalog. To order, simply select desired option from each category and place in the appropriate box.

All switches supplied in “OFF” position.

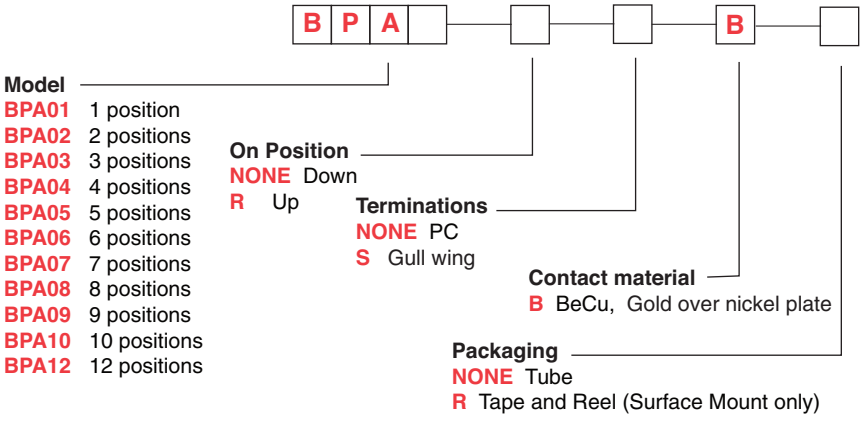

Third Angle Projection

Dimensions are shown: Inch (mm)
Specifications and dimensions subject to change

Side Actuator – Thru-hole Terminals

ROHS PART NUMBER	NO. POS.	DIM. 'A'	DIM. 'B'	QUANTITY PER TUBE
BPA01B	1	.176 (4,48)	N/A	100
BPA02B	2	.276 (7,0)	.100 (2,54)	60
BPA03B	3	.376 (9,6)	.200 (5,08)	45
BPA04B	4	.476 (12,1)	.300 (7,62)	35
BPA05B	5	.575 (14,6)	.400 (10,16)	30
BPA06B	6	.677 (17,2)	.500 (12,70))	25
BPA07B	7	.776 (19,7)	.600 (15,24)	20
BPA08B	8	.878 (22,3)	.700 (17,78)	20
BPA09B	9	.976 (24,8)	.800 (20,32)	15
BPA10B	10	1.075 (27,3)	.900 (22,86)	15
BPA12B	12	1.280 (32,5)	1.100 (27,94)	14

Schematic

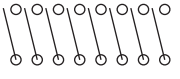

SPST

NOTE: Reverse throw available, contact C&K for P/N and quote.

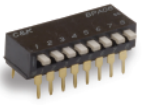

BPA08B

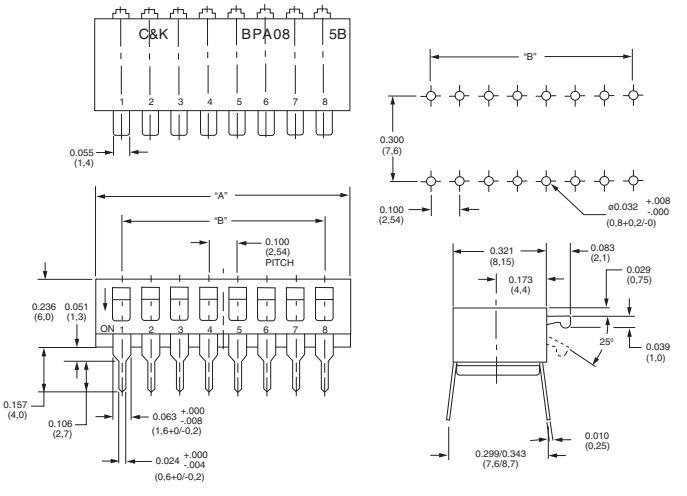

Side Actuator – Surface Mount Terminals

ROHS PART NUMBER	NO. POS.	DIM. 'A'	DIM. 'B'	QUANTITY PER TUBE
BPA01SB	1	.176 (4,48)	N/A	100
BPA02SB	2	.276 (7,0)	.100 (2,54)	60
BPA03SB	3	.376 (9,6)	.200 (5,08)	45
BPA04SB	4	.476 (12,1)	.300 (7,62)	35
BPA05SB	5	.575 (14,6)	.400 (10,16)	30
BPA06SB	6	.677 (17,2)	.500 (12,70))	25
BPA07SB	7	.776 (19,7)	.600 (15,24)	20
BPA08SB	8	.878 (22,3)	.700 (17,78)	20
BPA09SB	9	.976 (24,8)	.800 (20,32)	15
BPA10SB	10	1.075 (27,3)	.900 (22,86)	15
BPA12SB	12	1.280 (32,5)	1.100 (27,94)	14

Schematic

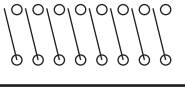

SPST

NOTE: Tape and reel packaging available by adding "R" to end of project number.

BPA08SB

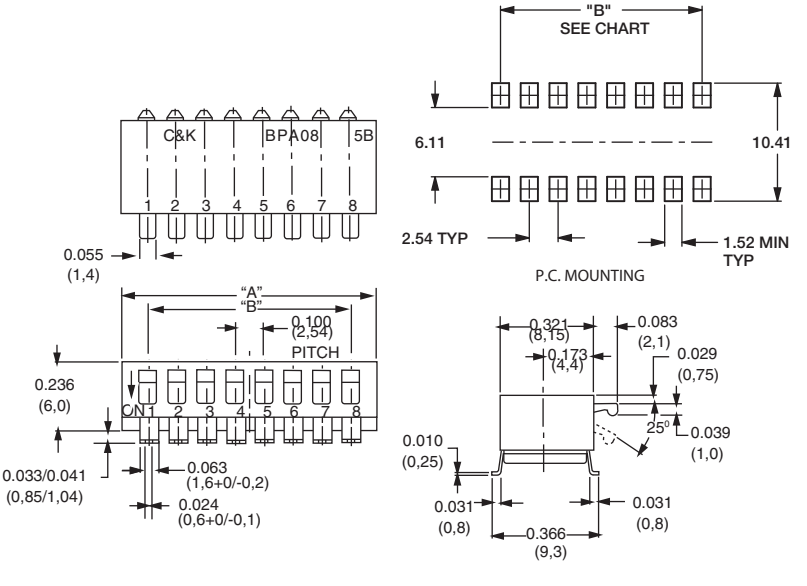

Third Angle Projection

Dimensions are shown: Inch (mm)
Specifications and dimensions subject to change

BPA Series
Side Actuated DIP Switches

Tape & Reel Packaging – Surface Mount Options Only

QTY/ REEL	POLES	DIM. 'A'	DIM. 'B'	DIM. 'C'	DIM. 'D'	DIM. 'E'
500	1	.453 (11,5)	—	.945 (24,0)	.530 (13,45)	.960 (24,4)
500	2	.453 (11,5)	—	.945 (24,0)	.311 (7,9)	.960 (24,4)
500	3	.453 (11,5)	—	.945 (24,0)	.409 (10,4)	.960 (24,4)
500	4	.453 (11,5)	—	.945 (24,0)	.508 (12,9)	.960 (24,4)
500	5	.453 (11,5)	—	.945 (24,0)	.606 (15,4)	.960 (24,4)
500	6	.559 (14,2)	1.118 (28,4)	1.260 (32,0)	.709 (18,0)	1.275 (32,4)
500	7	.559 (14,2)	1.118 (28,4)	1.260 (32,0)	.807 (20,5)	1.275 (32,4)
500	8	.795 (20,2)	1.590 (40,4)	1.732 (44,0)	.894 (22,7)	1.748 (44,4)
500	9	.795 (20,2)	1.590 (40,4)	1.732 (44,0)	1.004 (25,5)	1.748 (44,4)
500	10	.795 (20,2)	1.590 (40,4)	1.732 (44,0)	1.106 (28,1)	1.748 (44,4)
500	12	.795 (20,2)	1.590 (40,4)	1.732 (44,0)	1.311 (33,3)	1.748 (44,4)

Note: For tape and reel packaging, add 'R' to end of part number.

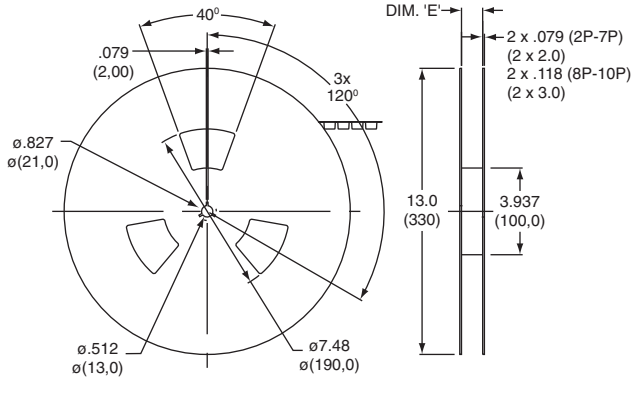

Tube Packaging

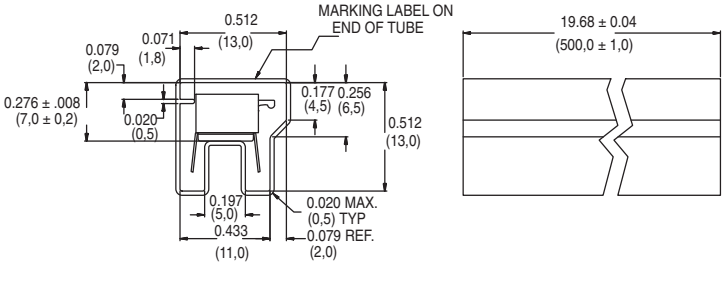

1 Position

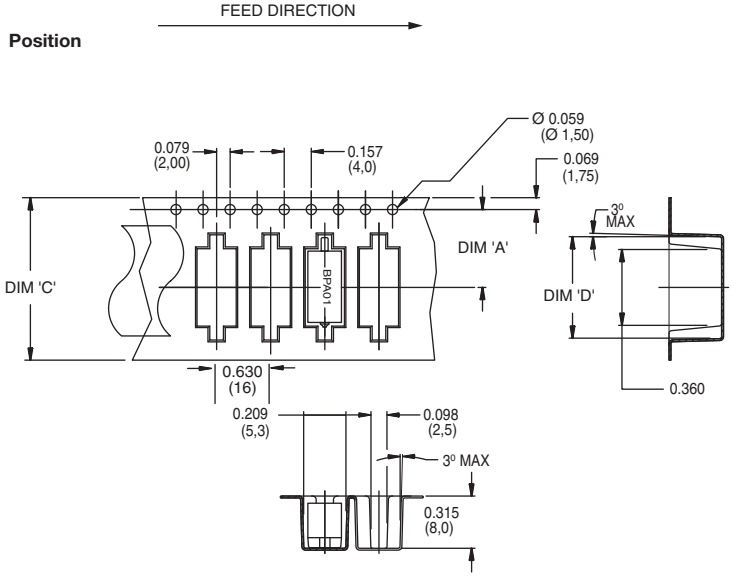

2, 3, 4 & 5 Positions

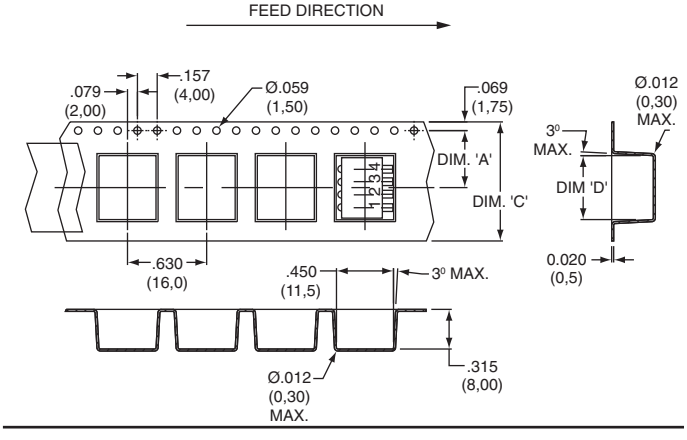

6, 7, 8, 9, 10 & 12 Positions

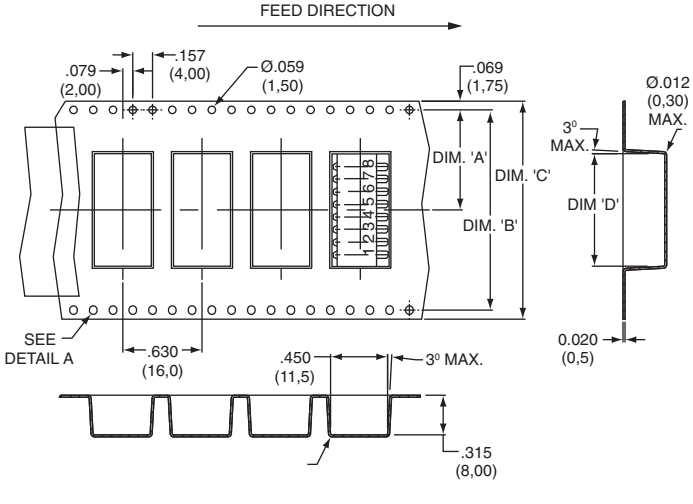

Third Angle Projection

Dimensions are shown: Inch (mm)
Specifications and dimensions subject to change

Features/Benefits

- ***Bifurcated contact for increased electrical reliability***
- ***Process sealed for surface mount soldering and washable processing***
- ***RoHS compliant***

Typical Applications

- ***Hand-held electronic devices***
- ***Portable computer and electronic devices***
- ***Instrumentation and controls***
- ***Inverters***

Specifications

CONTACT RATING: 25 mA @ 24 V DC (switching) or
100 mA @ 50 V DC (steady state).

MECHANICAL AND ELECTRICAL LIFE: 200 cycles at rated loads.

CONTACT RESISTANCE: 100 mΩ max. initial. @ 2 V DC /10 mA

INSULATION RESISTANCE: 100 MΩ @ 100 V DC min.

DIELECTRIC STRENGTH: 300 V AC /minute

STORAGE TEMPERATURE: -40°C to 85°C.

OPERATING TEMPERATURE: -30°C to 85°C.

OPERATING FORCE: 4.9 N max.

SOLDERABILITY: Per MIL-STD-202F method 208D, or
EIA RS-186E method 9 (1 hour steam aging).

PACKAGING: 1,000 pieces tape & reel

Materials

CASE AND COVER: PPS, color black (UL94V-0).

ACTUATOR: LCP (UL94-0)

CONTACTS: Copper alloy with gold plate over nickel plate

TERMINALS (INSERT MOLDED):
Copper alloy gold flash over nickel plate

TAPE SEAL: Polyamide

Note: Specifications and materials listed above are for switches with standard options. For information on specific and custom switches, consult Customer Service Center. For Tin Lead options consult customer service center.

How To Order

The Build-A Switch concept allows you to mix and match options to create the switch you need. Below is a complete listing of options shown in catalog. To order, simply select desired option from each category and place in the appropriate box.

All switches supplied in “OFF” position..

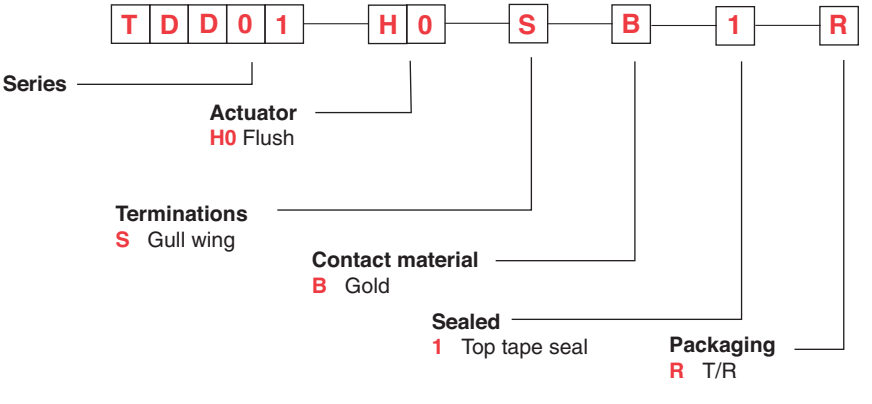

Third Angle Projection

Dimensions are shown: Inch (mm)
Specifications and dimensions subject to change

TDD Series
Jumper Switch

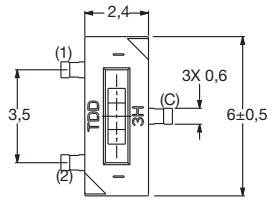

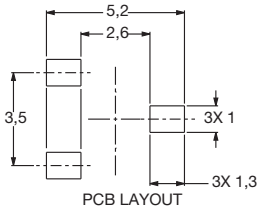

PCB LAYOUT

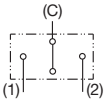

SCHEMATIC
SPDT

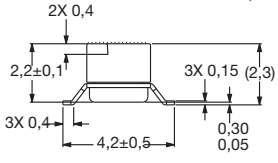

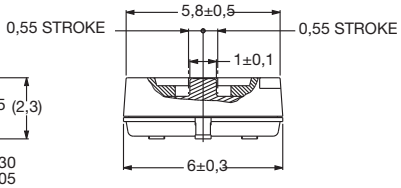

SECTION A-A

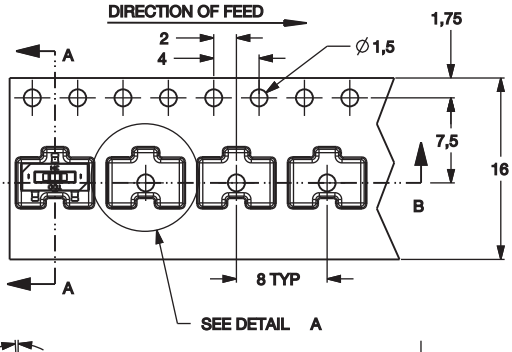

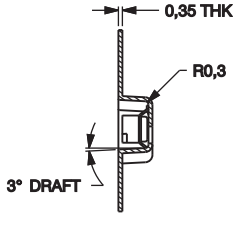

SECTION A-A

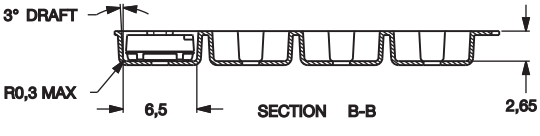

SECTION B-B

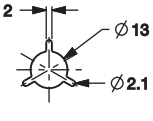

DETAIL "B"

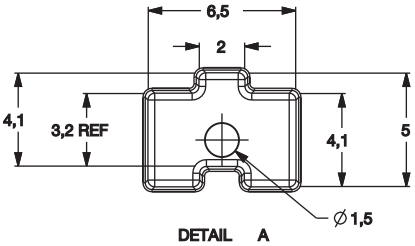

DETAIL A
SCALE 6:1

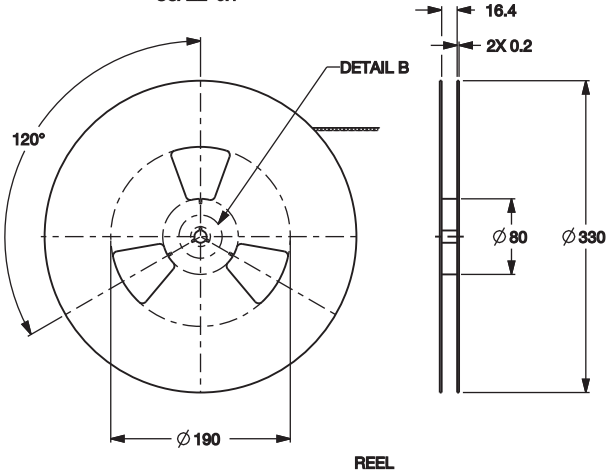

REEL
NOT TO SCALE

Third Angle
Projection

Dimensions are shown: Inch (mm)
Specifications and dimensions subject to change

SPA Series
Single In-line Package Switches

Features/Benefits

- ***Thin Single In-line Packaging saves PCB space***
- ***Retention feature holds part to PCB prior to soldering***
- ***Available in vertical or right angle models***
- ***High pressure contact system does not require tape sealing***
- ***RoHS compliant***

Typical Applications

- ***Address switch for industrial controls***
- ***Logic switching for computers and peripherals***
- ***Function controlling for numerous applications***

Specifications

CONTACT RATING:
Carry: 10 mA @ 5VDC
Switching: 0.1 mA @ 0.1m VDC min.

MECHANICAL AND ELECTRICAL LIFE: 1,000 cycles min.

CONTACT RESISTANCE: 50 mΩ max. @ 20 V DC 10mA.

INSULATION RESISTANCE: 100 MΩ min. @ 100 V DC.

DIELECTRIC STRENGTH: 1 minute @ 300 V AC.

CAPACITANCE: 5pF max. between adjacent terminals.

OPERATING TEMPERATURE: -30°C to 60°C.

STORAGE TEMPERATURE: -30°C to 80°C.

OPERATING FORCE: 5.9N max.

SOLDERABILITY: Dip & look solderability testing per C&K spec. #448. Unplated edges of terminals permitted.

PACKAGING: Switches supplied in rigid dispensing tubes in full-tube quantities only, this may affect order quantity. Numbers of switches per tube varies with model.

Materials

BASE: PPS (UL94V-0).
COVER: PBT (UL94V-0).

ACTUATOR: 4/6 Nylon (UL 94V-0).

MOVABLE CONTACT: Beryllium copper alloy, gold over nickel plate.

FIXED CONTACT: Copper alloy, gold over nickel plate.

CLIP: Phosphor bronze wire. Phosphor bronze, Tin over nickel plate.

Note: Specifications and materials listed above are for switches with standard options. For information on specific and custom switches, consult Customer Service Center.

How To Order

The Build-A Switch concept allows you to mix and match options to create the switch you need. Below is a complete listing of options shown in catalog. To order, simply select desired option from each category and place in the appropriate box.

All switches supplied in “OFF” position.

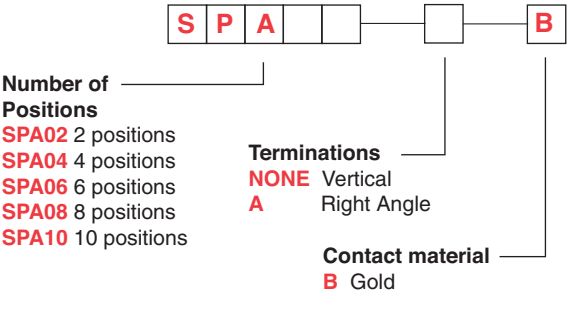

Third Angle Projection

Dimensions are shown: Inch (mm)
Specifications and dimensions subject to change

SPA Series
Single In-line Package Switches

Vertical

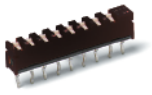

SPA08B

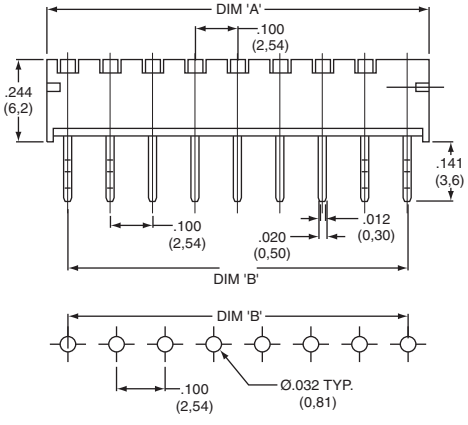

ROHS PART NUMBER	NO. POS.	DIM. 'A'	DIM. 'B'	QUANITY PER TUBE
SPA02B	2	.342 (8,68)	.200 (5,08)	50
SPA04B	4	.542 (13,76)	.400 (10,16)	30
SPA06B	6	.742 (18,84)	.600 (15,24)	25
SPA08B	8	.942 (23,92)	.800 (20,32)	20
SPA10B	10	1.142 (29,00)	1.000 (25,40)	15

Schematic

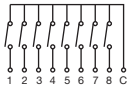

SPST

SPA08AB

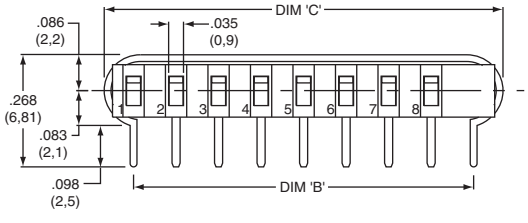

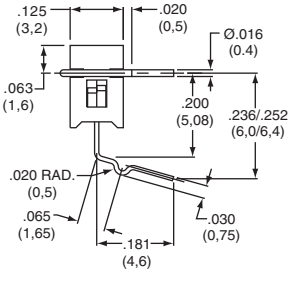

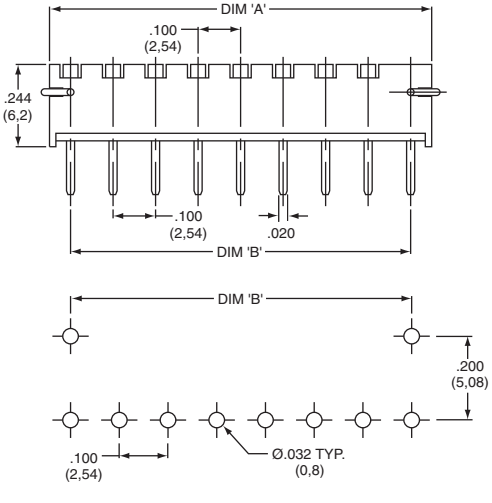

ROHS PART #	NO. POS.	DIM. 'A'	DIM. 'B'	DIM. 'C'	QTY PER TUBE
SPA02AB	2	.342 (8,68)	.200 (5,08)	.339 (8,6)	50
SPA04AB	4	.542 (13,76)	.400 (10,16)	.540 (13,7)	30
SPA06AB	6	.742 (18,84)	.600 (15,24)	.736 (18,7)	25
SPA08AB	8	.942 (23,92)	.800 (20,32)	.937 (23,8)	20
SPA10AB	10	1.142 (29,00)	1.000 (25,40)	1.138 (28,9)	15

Schematic

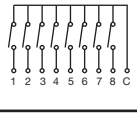

SPST

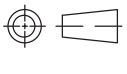

Third Angle Projection

Dimensions are shown: Inch (mm)
Specifications and dimensions subject to change

RTE Series
Low Profile Rotary DIP Switches

Features/Benefits

- *Thru-hole and surface mount models*
- *Miniature size with robust metal cover in black or silver nickel finish*
- *4, 10, & 16 positions*
- *Large choice of codings*
- *Vertical or reverse versions*
- *RoHS compliant*

Typical Applications

- *Timers, automation components*
- *Computer and peripherals*
- *Alarms, access control, smoke detectors*
- *Instrumentation*

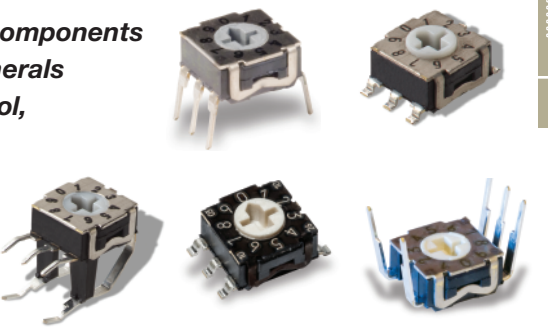

Specifications

CONTACT RATING:
Gold: 100 mA max. 10µ A min. 30 V DC max. 20 mVDC min.
MECHANICAL LIFE: 20,000 actuations
CONTACT RESISTANCE: 100 mΩ max. initial;
150 mΩ after life
INSULATION RESISTANCE: 10^{10} Ω min. initial
DIELECTRIC STRENGTH: 300 Vrms 1 mn
OPERATING TEMPERATURE: -25°C to 85°C.
STORAGE TEMPERATURE: -40°C to 85°C.
PACKAGING: N or R terminations in tube.
V termination in box. G termination in reel, 750 pieces per reel. G termination with flush actuator, 1250 pieces per reel.

Materials

COVER: Brass, nickel plated (black or silver)
BASE: PPS
ACTUATOR: LCP
MOVABLE CONTACTS: Bronze, gold plated.
STATIONARY CONTACTS: Brass, gold plated.
TERMINALS: See page I-28 to I-29
O-RING: Silicone

Note: Specifications and materials listed above are for switches with standard options. For information on specific and custom switches, consult Customer Service Center.

Solderability: Wave soldering 260º/10 s.
SMT are reflow compatible according to C&K lead free specification for SMT components PS-LF-001.

How To Order

The Build-A Switch concept allows you to mix and match options to create the switch you need. Below is a complete listing of options shown in catalog. To order, simply select desired option from each category and place in the appropriate box.

NOTE: Some of the configurations may not be available or could require some development.

R T E

Number of Positions

RTE04 [2]
RTE10 [3]
RTE16 [3]

ESD Protection and top plate

0 Without ESD - standard plate
1 With ESD - standard plate [4]
B Without ESD - black plate

Actuator

0 Flush, screwdriver slot
1 Extended shaft [2, 5]
2 Shaft for button [2, 5, 6]

Terminations

N Thru-hole
V Right angle
G Surface mount
M Manual [8]
R Reverse, thru-hole

Switch Function

0 Single pole [3]
1 BCD code
2 BCD complement code [9]
3 Grey Code [10]
4 Hexadecimal code [11]
7 Grey Code [12]

Contact/Terminal Material

4 Gold/ lead free tin

2 - RTE04 version only available with screwdriver slot acuator "0"
3 - Single pole function not available for RTE10/RTE16
4 - ESD protection available with "N" thru-hole termination only
5 - Not available in surface mount
6 - Buttons ordered separately
8 - Manual - available for RTE10/RTE16 with actuator option "2" only
9 - BCD complement code for RTE10, not available with terminations "G" & "M"
10 - Grey Code - for RTE10 only
11 - Hexidecimal code for RTE16 only
12 - Grey code for RTE16 only

Third Angle Projection

Dimensions are shown: Inch (mm)
Specifications and dimensions subject to change

RTE Series
Low Profile Rotary DIP Switches

SWITCHES WITH STANDARD OPTIONS

PC Mount-Terminal Option N

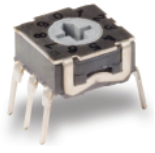

PART NUMBER WITHOUT ESD PIN	WITH ESD PIN	NO. POS.	FUNCTION	QTY PER TUBE
RTE0400N04	RTE0410N04	4	SP4T	65
RTE1000N14	RTE1010N14	10	BCD	65
RTE1600N44	RTE1610N44	16	HEXADECIMAL	65

Right Angle Mount-Terminal Option V

PART NUMBER	NO. POS.	FUNCTION	QUANTITY
RTE0400V04	4	SP4T	150 per box
RTE1000V14	10	BCD	150 per box
RTE1600V44	16	HEXADECIMAL	150 per box

Surface Mount-Terminal Option G

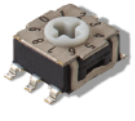

PART NUMBER	NO. POS.	FUNCTION	QUANTITY PER REEL
RTE0400G04	04	SP4T	1250
RTE1000G14	10	BCD	1250
RTE1600G44	16	HEXADECIMAL	1250

NUMBER OF POSITIONS

RTE04 4 POSITION

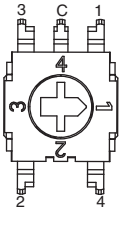

RTE10 10 POSITION

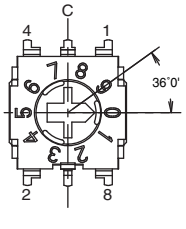

RTE16 16 POSITION

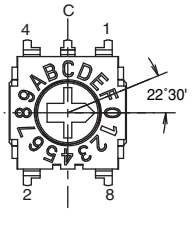

Third Angle Projection

Dimensions are shown: Inch (mm)
Specifications and dimensions subject to change

ESD PROTECTION

0 WITHOUT

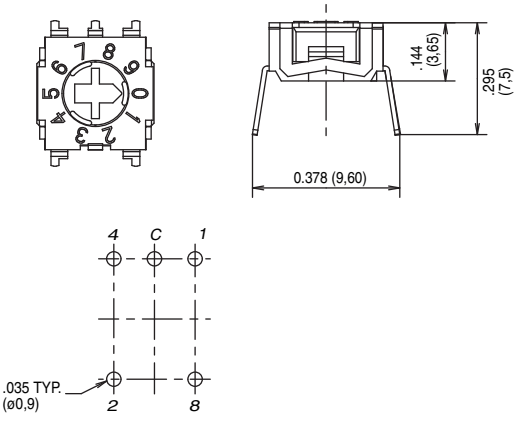

1 WITH

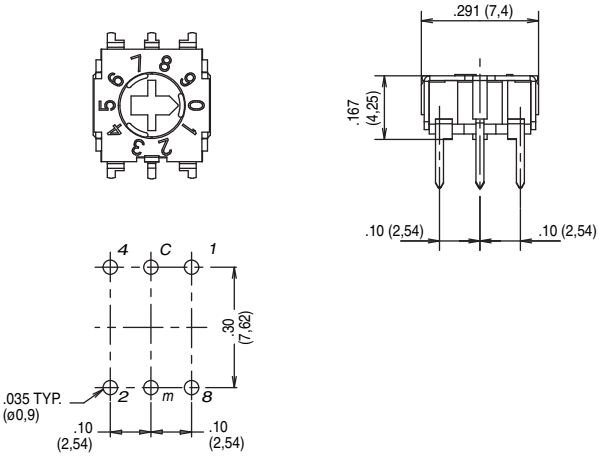

ACTUATOR

0 FLUSH, SCREWDRIVER SLOT

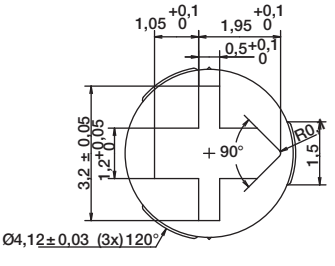

1 EXTENDED SHAFT
(not available in surface mount)

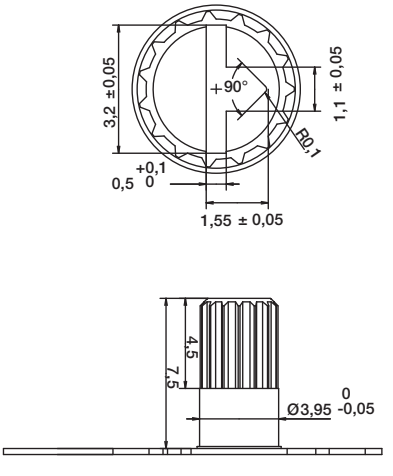

2 SHAFT FOR BUTTON

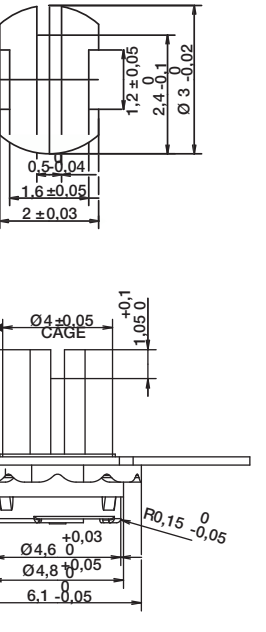

Third Angle Projection

Dimensions are shown: Inch (mm)
Specifications and dimensions subject to change

RTE Series
Low Profile Rotary DIP Switches

TERMINATIONS

N THRU-HOLE

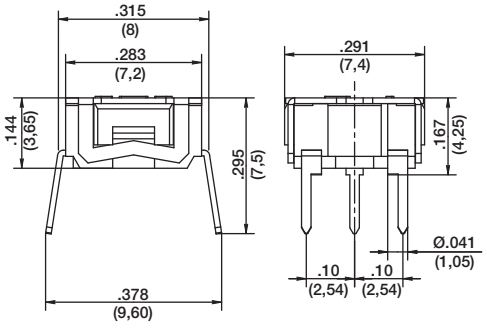

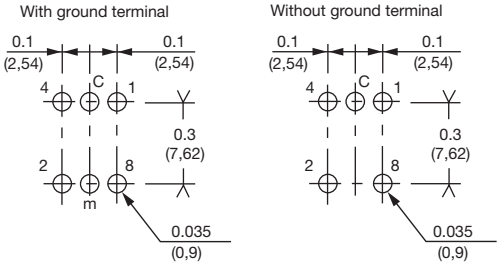

R REVERSE, THRU-HOLE

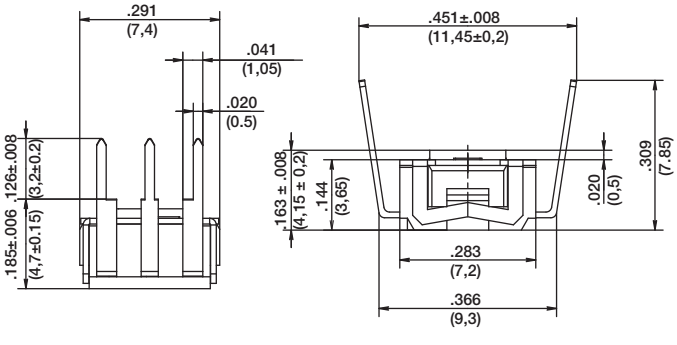

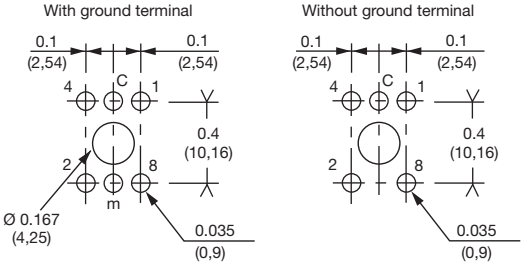

V RIGHT ANGLE, THRU-HOLE

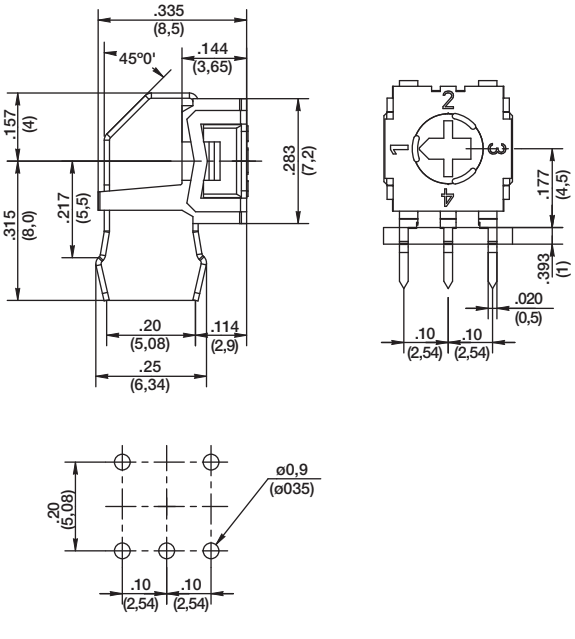

G SURFACE MOUNT

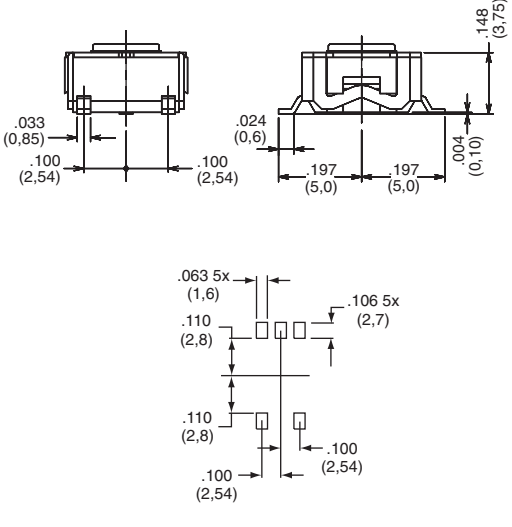

PCB layout seen component side

Third Angle Projection

Dimensions are shown: Inch (mm)
Specifications and dimensions subject to change

TERMINATIONS

M OPTION

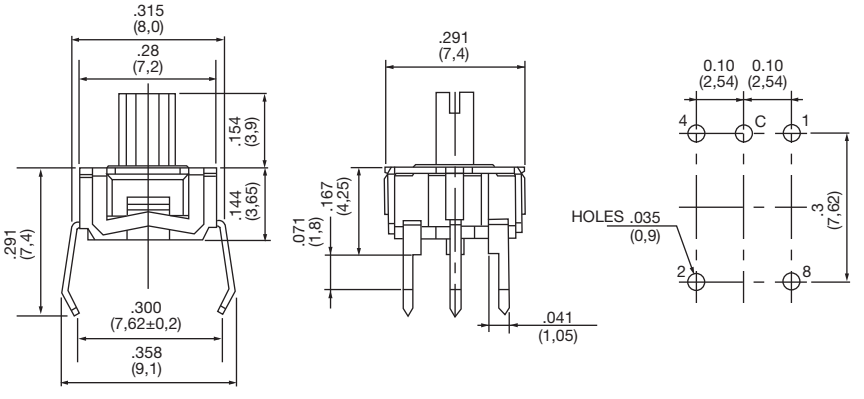

SWITCH FUNCTION

0 SINGLE POLE

POS.	1	2	3	4
C	●	●	●	●
1	●			
2		●		
3			●	
4				●

1 BCD CODE

POS.	0	1	2	3	4	5	6	7	8	9
C	●	●	●	●	●	●	●	●	●	●
1		●		●		●		●		●
2			●	●			●	●		
4					●	●	●	●		
8									●	●

2 BCD COMPLEMENT CODE

POS.	0	1	2	3	4	5	6	7	8	9
C	●	●	●	●	●	●	●	●	●	●
1	●		●	●	●		●		●	
2	●	●			●	●			●	●
4	●	●	●	●					●	●
8	●	●	●	●	●	●	●	●		

Other codes available by request.

3 GREY CODE (for RTE10 only)

POS.	0	1	2	3	4	5	6	7	8	9
C	●	●	●	●	●	●	●	●	●	●
1		●	●			●	●			●
2			●	●	●	●				
4					●	●	●	●	●	●
8									●	●

4 HEXADECIMAL CODE

POS.	0	1	2	3	4	5	6	7	8	9	10	11	12	13	14	15
C	●	●	●	●	●	●	●	●	●	●	●	●	●	●	●	●
1		●		●		●		●		●		●		●		●
2			●	●			●	●			●	●			●	●
4					●	●	●	●					●	●	●	●
8									●	●	●	●	●	●	●	●

7 GREY CODE (for RTE04 only)

POS.	1	2	3	4
C	●	●	●	●
1	●			
2		●		
4			●	
8				●

(for RTE16 only)

POS.	0	1	2	3	4	5	6	7	8	9	A	B	C	D	E	F
C	●	●	●	●	●	●	●	●	●	●	●	●	●	●	●	●
1		●	●			●	●			●	●			●	●	
2			●	●	●	●					●	●	●	●		
4					●	●	●	●	●	●	●	●				
8									●	●	●	●	●	●	●	●

CONTACT MATERIAL

OPTION CODE	RoHS COMPLIANT	RoHS COMPATIBLE	CONTACT MATERIAL	TERMINAL PLATING
4	YES	YES	GOLD	LEAD FREE TIN

Third Angle Projection

Dimensions are shown: Inch (mm)
Specifications and dimensions subject to change

RTE Series
Low Profile Rotary DIP Switches

BUTTONS AVAILABLE

Buttons are ordered separately, shipped in bulk.

Part Number	Color
BTN RTE 40	Red
BTN RTE 50	Green
BTN RTE 90	Black

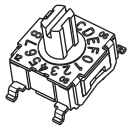

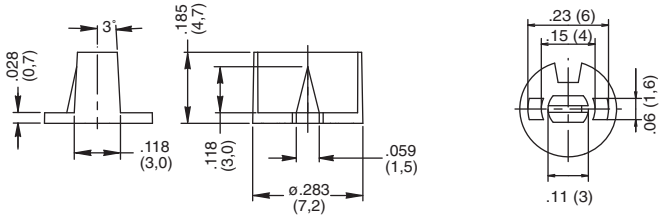

TAPE AND REEL

Tape and reel for RTExx02Gxx
750 pieces per reel.

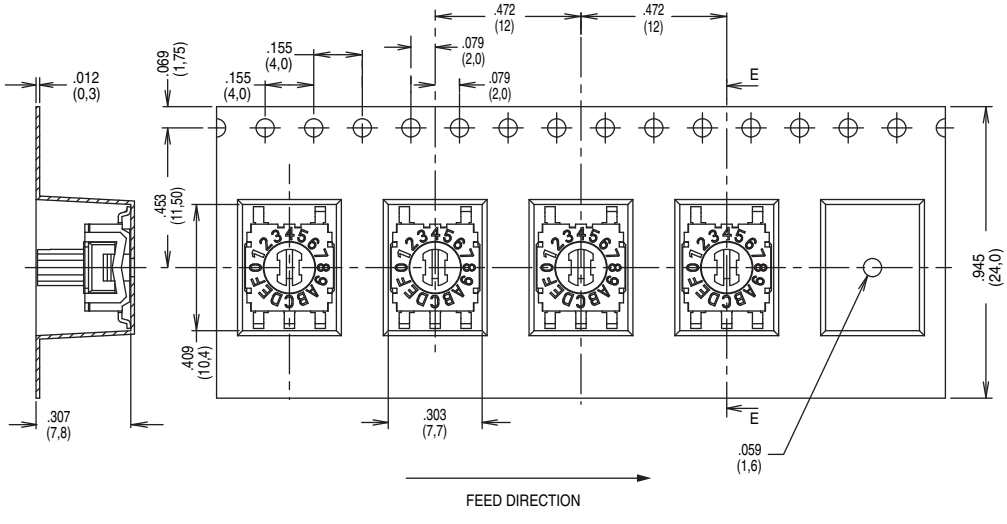

Tape and reel for RTExx00Gxx
1,250 pieces per reel.

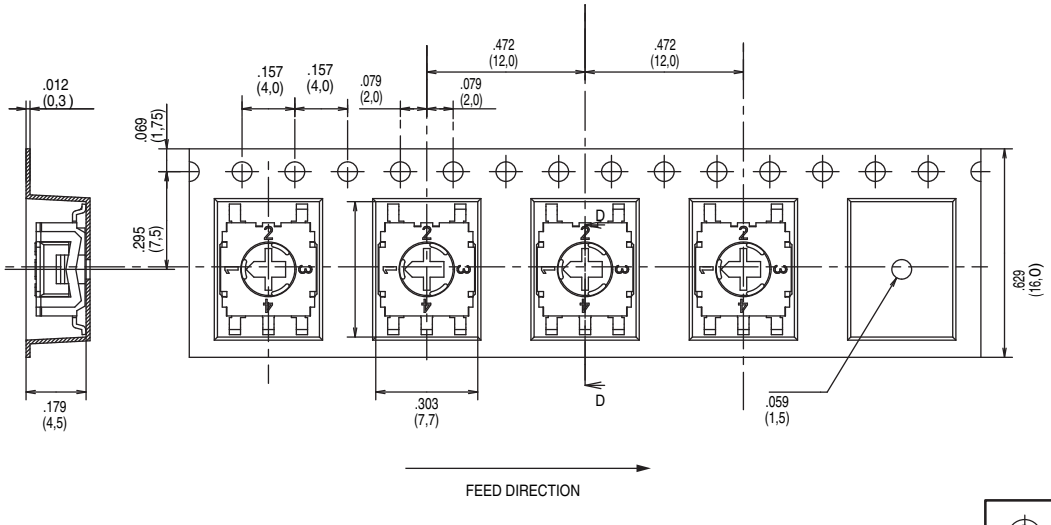

Third Angle Projection

Dimensions are shown: Inch (mm)
Specifications and dimensions subject to change

CD Series
8mm DIP Coded Rotary Switches

Features/Benefits

- ***Process sealed – withstands soldering and cleaning***
- ***Thru-hole and surface mount models***
- ***Compact size saves space – 36% smaller than traditional 10mm DIP***
- ***Crisp, positive detent ensures actuation***
- ***RoHS compliant***

Typical Applications

- ***Address switching applications***
- ***Data storage devices***
- ***Computer and peripherals***
- ***Instrumentation***

Specifications

CONTACT RATING: 0.4 VA max. @ 20 V AC or V DC max.

MECHANICAL AND ELECTRICAL LIFE:
CD10 & CD16: 20,000 actuations.
CD08: 12,000 actuations.

CONTACT RESISTANCE: 50 milliohms max. initial.

INSULATION RESISTANCE: 100 megohms min. @ 250 V AC min.

DIELECTRIC STRENGTH: 250 V RMS min. @ sea level.

OPERATING TEMPERATURE: -25°C to 85°C.

STORAGE TEMPERATURE: -40°C to 85°C.

SOLDERABILITY: Per MIL-STD-202F method 208D or EIA RS-186E, method 9 (1 hour steam aging).

PACKAGING: Switches supplied in rigid tubes in full-tube quantities only: this may affect order quantity. Tube quantity is 60 pieces per tube. Surface mount switches available in tape & reel packaging per EIA 481A, 800 per reel, surface mount with “M0” actuator only.

Materials

COVER: PPS (UL94V-0), Color; Black.
BASE: PPS (UL94V-0), Color; Black

ACTUATOR: LCP (UL 94V-0), Color White (CDXXR)
Color Black (CDXXC)
Note: internal o-ring seal standard with all actuators.

MOVABLE CONTACTS: Copper alloy with gold plate over nickel plate.

STATIONARY CONTACTS: Copper alloy with gold plate over nickel plate.

TERMINALS: Copper alloy with gold plate over nickel plate.

Note: Specifications and materials listed above are for switches with standard options. For information on specific and custom switches, consult Customer Service Center.

How To Order

The Build-A Switch concept allows you to mix and match options to create the switch you need. Below is a complete listing of options shown in catalog. To order, simply select desired option from each category and place in the appropriate box.

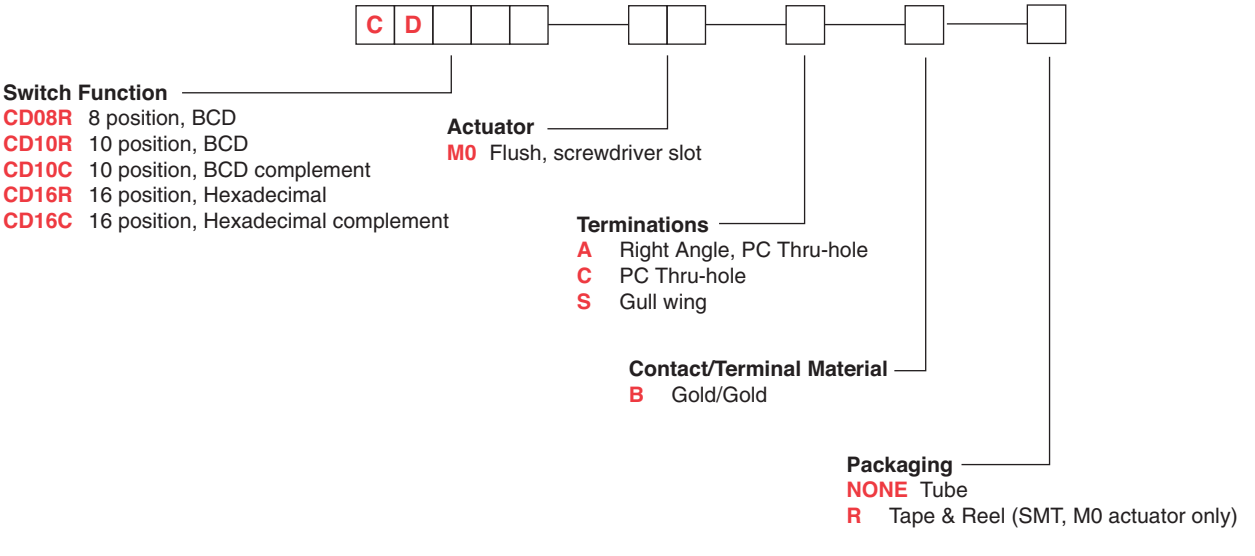

Third Angle Projection

Dimensions are shown: Inch (mm)
Specifications and dimensions subject to change

CD Series
8mm DIP Coded Rotary Switches

SWITCHES WITH STANDARD OPTIONS

PC Mount

CD16RM0CB

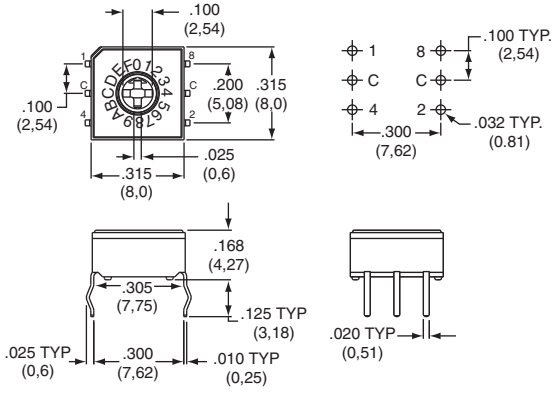

PART NUMBER	NO. POS.	QUANTITY PER TUBE
CD08RM0CB	8	60
CD10RM0CB	10	60
CD10CM0CB	10	60
CD16RM0CB	16	60
CD16CM0CB	16	60

Right Angle Mount

CD10RM0AB

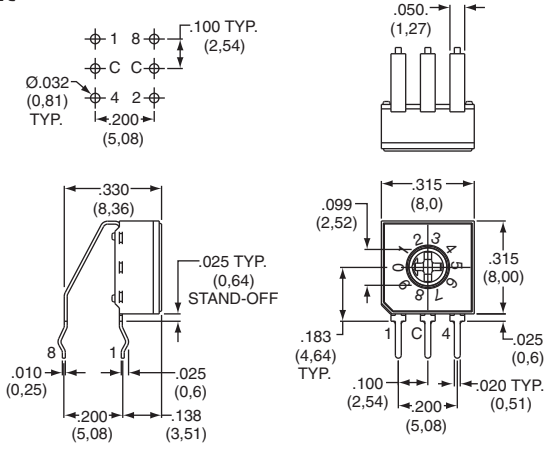

PART NUMBER	NO. POS.	QUANTITY PER TUBE
CD08RM0AB	8	60
CD10RM0AB	10	60
CD10CM0AB	10	60
CD16RM0AB	16	60
CD16CM0AB	16	60

Surface Mount

CD10RM0SB

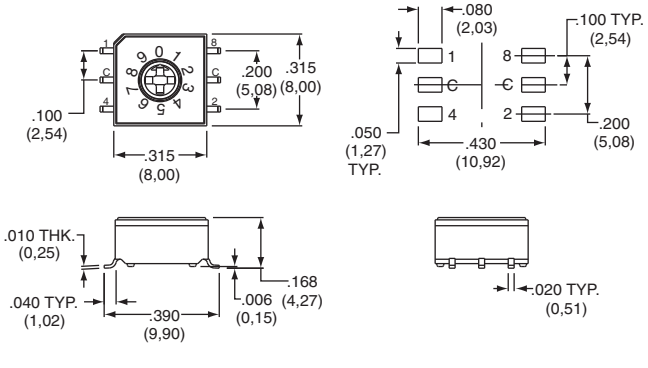

PART NUMBER	NO. POS.	QUANTITY PER TUBE
CD08RM0SB	8	60
CD10RM0SB	10	60
CD10CM0SB	10	60
CD16RM0SB	16	60
CD16CM0SB	16	60

Note: For tape and reel packaging, add 'R' to end of part number.

Third Angle Projection

Dimensions are shown: Inch (mm)
Specifications and dimensions subject to change

SWITCH FUNCTION

CD08R

8 POSITION, BCD
ACTUATOR COLOR: WHITE

POS.	0	1	2	3	4	5	6	7
C	●	●	●	●	●	●	●	●
1		●		●		●		●
2			●	●			●	●
4					●	●	●	●
8								

Switches ship and to be solder processed in position “0”

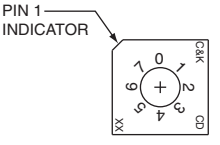

CD10R

10 POSITION, BCD
ACTUATOR COLOR: WHITE

POS.	0	1	2	3	4	5	6	7	8	9
C	●	●	●	●	●	●	●	●	●	●
1		●		●		●		●		●
2			●	●			●	●		
4					●	●	●	●		
8									●	●

Switches ship and to be solder processed in position “0”

CD10C

10 POSITION, BCD COMPLEMENT
ACTUATOR COLOR: BLACK

POS.	0	1	2	3	4	5	6	7	8	9
C	●	●	●	●	●	●	●	●	●	●
1	●		●		●		●		●	
2	●	●			●	●			●	●
4	●	●	●	●					●	●
8	●	●	●	●	●	●	●	●		

Switches ship and to be solder processed in position “7”

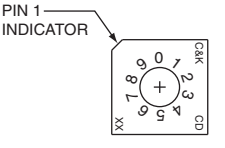

CD16R

16 POSITION, HEXADECIMAL
ACTUATOR COLOR: WHITE

POS.	0	1	2	3	4	5	6	7	8	9	A	B	C	D	E	F
C	●	●	●	●	●	●	●	●	●	●	●	●	●	●	●	●
1		●		●		●		●		●		●		●		●
2			●	●			●	●			●	●			●	●
4					●	●	●	●					●	●	●	●
8									●	●	●	●	●	●	●	●

Switches ship and to be solder processed in position “0”

CD16C

16 POSITION, HEXADECIMAL COMPLEMENT
ACTUATOR COLOR: BLACK

POS.	0	1	2	3	4	5	6	7	8	9	A	B	C	D	E	F
C	●	●	●	●	●	●	●	●	●	●	●	●	●	●	●	●
1	●		●		●		●		●		●		●		●	
2	●	●			●	●			●	●			●	●		
4	●	●	●	●					●	●	●	●				
8	●	●	●	●	●	●	●	●								

Switches ship and to be solder processed in position “F”

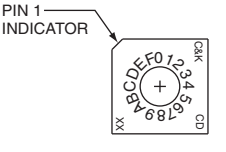

ACTUATOR

M0

(STD.) FLUSH WITH SCREWDRIVER SLOT

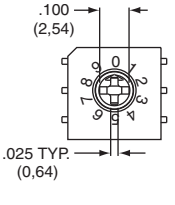

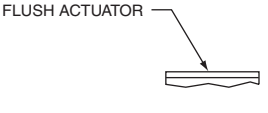

NOTE: Designed for #0 Phillips screwdriver.

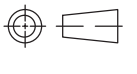

Third Angle Projection

Dimensions are shown: Inch (mm)
Specifications and dimensions subject to change

CD Series
8mm DIP Coded Rotary Switches

TERMINATIONS

C PC, THRU-HOLE

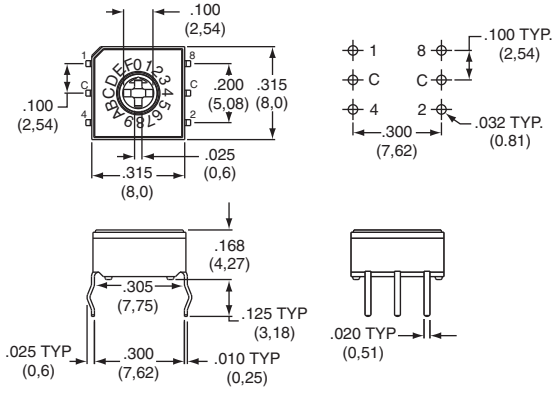

A RIGHT ANGLE, PC THRU-HOLE

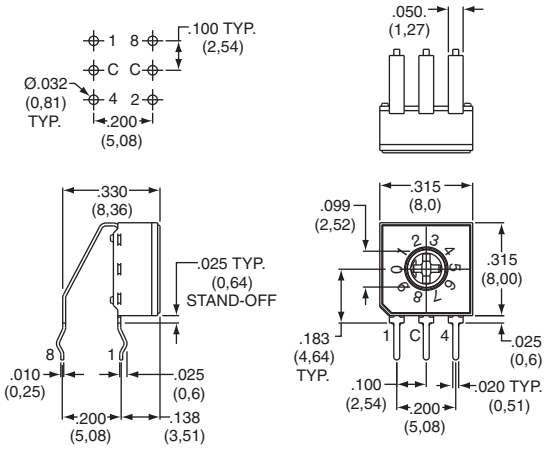

S SURFACE MOUNT

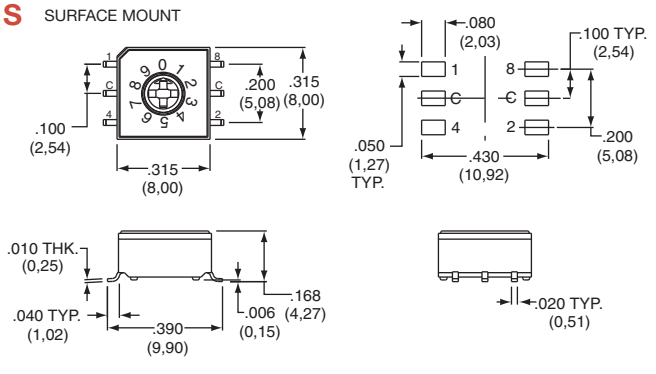

CONTACT MATERIAL

OPTION CODE	RoHS COMPLIANT*	RoHS COMPATIBLE*	CONTACT MATERIAL	TERMINAL PLATING	RATING	
B	YES	YES	GOLD	GOLD	LOW LEVEL/DRY CIRCUIT	0.4 VC MAX. @ 20 V AC or DC MAX.

* Note: See Technical Data section of this catalog for RoHS compliant and compatible definitions and specifications.

TAPE & REEL

For part number CDxxM0SB

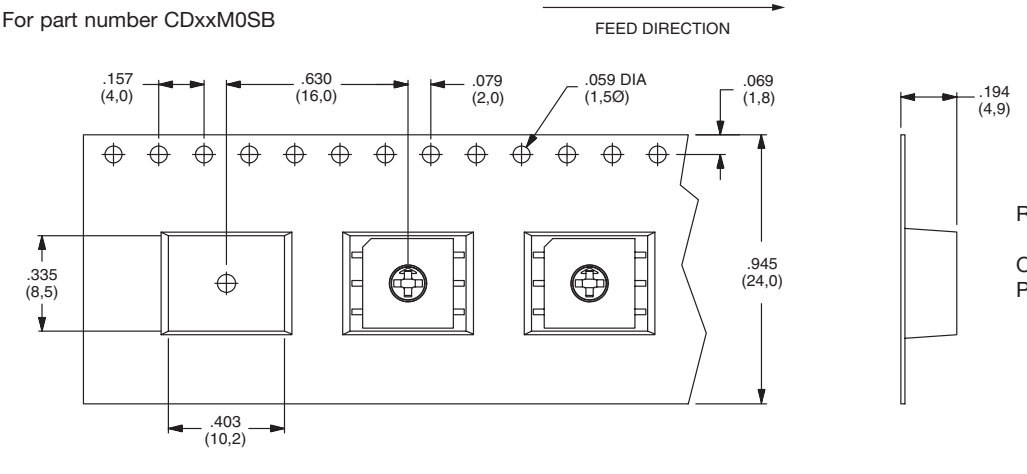

Reel Information

Outside diameter	13.00 (333,0)
Pilot hole	.512 (13,0)

Third Angle Projection

Dimensions are shown: Inch (mm)
Specifications and dimensions subject to change

CRD Series
10mm DIP Coded Rotary Switches

Features/Benefits

- ***Process sealed – withstands soldering and cleaning***
- ***Thru-hole and surface mount models***
- ***Crisp, positive detent ensures actuation***
- ***Computer and peripherals***
- ***RoHS compliant***

Typical Applications

- ***Address switching applications***
- ***Data storage devices***
- ***Computer and peripherals***
- ***Instrumentation***

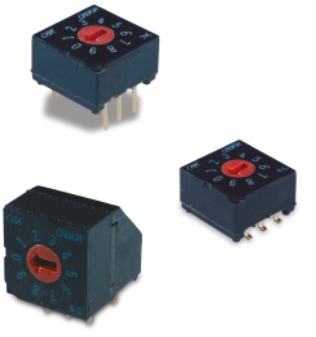

Specifications

CONTACT RATING: 0.4 V AC, DC 20 V max.

ELECTRICAL LIFE: 20,000 steps min. @ 5 V DC 10 mA.

MECHANICAL LIFE: 30,000 steps min.

CONTACT RESISTANCE: 100 milliohms max. initial @ 2 V DC 10 mA.

INSULATION RESISTANCE: 1000 megohms min. @ 100 V DC

DIELECTRIC STRENGTH: 300 V AC for 1 minute.

OPERATING TEMPERATURE: -20°C to 85°C.

STORAGE TEMPERATURE: -40°C to 85°C.

OPERATING FORCE: 1000 grams max.

PACKAGING: Switches supplied in anti-static tubes in full quatities only. This may affect order quantity. Surface mount models with MO actuators available in tape and reel, 500 pieces per reel.

Materials

COVER: PPS (black)

HOUSING: PPS (black)

ACTUATOR: PA 6T M0 actuator option; PBT L1 and W1 actuator option.

CONTACTS: Beryllium Copper with Gold over Nickel plate

TERMINALS: Brass with Gold Nickel plate.

Note: Specifications and materials listed above are for switches with standard options. For information on specific and custom switches, consult Customer Service Center.

How To Order

The Build-A Switch concept allows you to mix and match options to create the switch you need. Below is a complete listing of options shown in catalog. To order, simply select desired option from each category and place in the appropriate box.

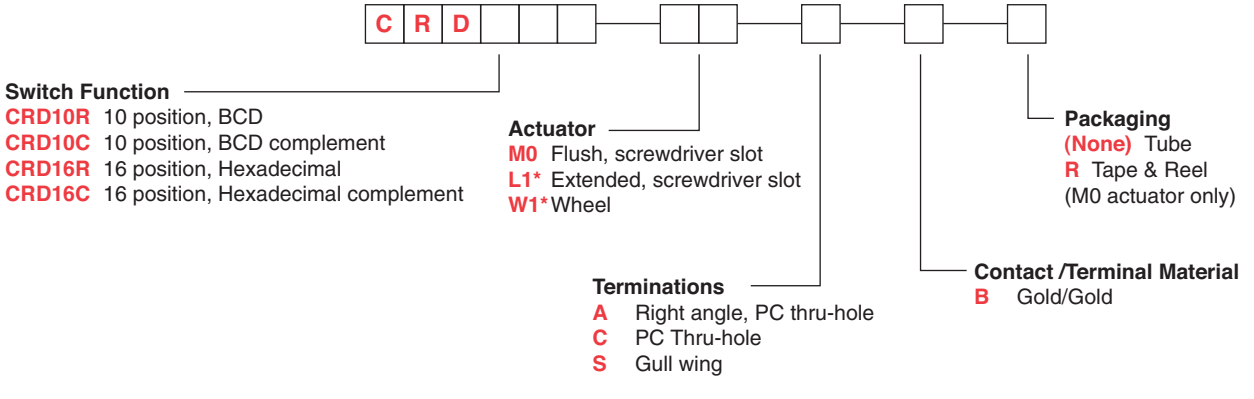

* Note - L1 and W1 actuators are not available in termination "S"

Third Angle Projection

Dimensions are shown: Inch (mm)
Specifications and dimensions subject to change

CRD Series
10mm DIP Coded Rotary Switches

SWITCHES WITH STANDARD OPTIONS

PC Mount

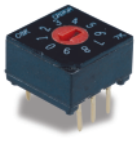

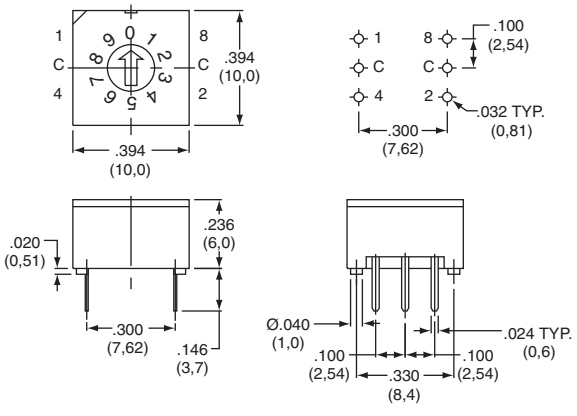

PART NUMBER	NO. POS.	QUANTITY PER TUBE
CRD10RM0CB	10	45
CRD16RM0CB	16	45

Right Angle Mount

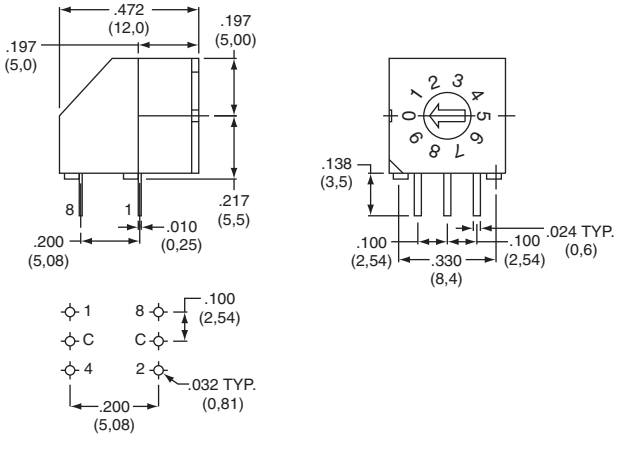

PART NUMBER	NO. POS.	QUANTITY PER TUBE
CRD10RM0AB	10	45
CRD16RM0AB	16	45

Surface Mount

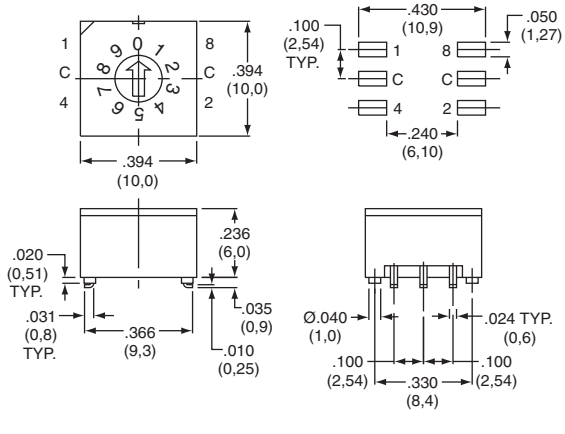

PART NUMBER	NO. POS.	QUANTITY PER TUBE
CRD10RM0SB	10	45
CRD16RM0SB	16	45

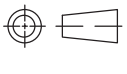

Third Angle Projection

Dimensions are shown: Inch (mm)
Specifications and dimensions subject to change

SWITCH FUNCTION

CRD10R

10 POSITION, BCD
ACTUATOR COLOR: RED

POS.	0	1	2	3	4	5	6	7	8	9
C	●	●	●	●	●	●	●	●	●	●
1		●		●		●		●		●
2			●	●			●	●		
4					●	●	●	●		
8									●	●

Switches ship and to be solder processed in position "0"

CRD10C

10 POSITION, BCD COMPLEMENT
ACTUATOR COLOR: ORANGE

POS.	0	1	2	3	4	5	6	7	8	9
C	●	●	●	●	●	●	●	●	●	●
1	●		●		●		●		●	
2	●	●			●	●			●	●
4	●	●	●	●					●	●
8	●	●	●	●	●	●	●	●		

Switches ship and to be solder processed in position "7"

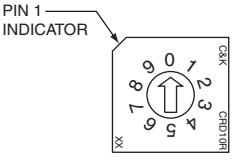

CRD16R

16 POSITION, HEXADECIMAL
ACTUATOR COLOR: BLACK

POS.	0	1	2	3	4	5	6	7	8	9	A	B	C	D	E	F
C	●	●	●	●	●	●	●	●	●	●	●	●	●	●	●	●
1		●		●		●		●		●		●		●		●
2			●	●			●	●			●	●			●	●
4					●	●	●	●					●	●	●	●
8									●	●	●	●	●	●	●	●

Switches ship and to be solder processed in position "0"

CRD16C

16 POSITION, HEXADECIMAL COMPLEMENT
ACTUATOR COLOR: WHITE

POS.	0	1	2	3	4	5	6	7	8	9	A	B	C	D	E	F
C	●	●	●	●	●	●	●	●	●	●	●	●	●	●	●	●
1	●		●		●		●		●		●		●		●	
2	●	●			●	●			●	●			●	●		
4	●	●	●	●					●	●	●	●				
8	●	●	●	●	●	●	●	●								

Switches ship and to be solder processed in position "F"

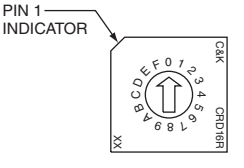

ACTUATOR

(STD.) FLUSH WITH SCREWDRIVER SLOT

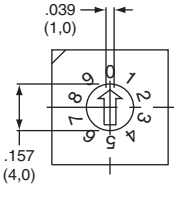

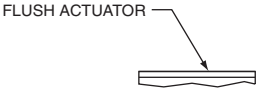

L1*

EXTENDED WITH SCREWDRIVER SLOT

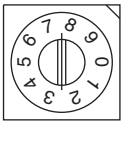

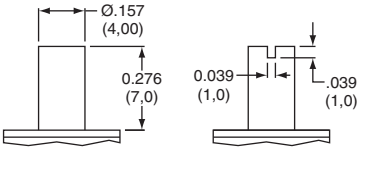

W1*

WHEEL

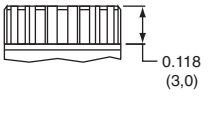

NOTE: Designed for #0 Phillips screwdriver.

* L1 and W1 actuators are not available in termination "S"

Third Angle Projection

Dimensions are shown: Inch (mm)
Specifications and dimensions subject to change

CRD Series
10mm DIP Coded Rotary Switches

TERMINATIONS

C PC, THRU-HOLE

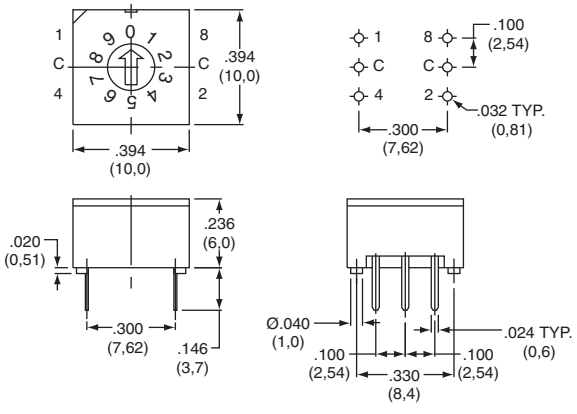

A RIGHT ANGLE, PC THRU-HOLE

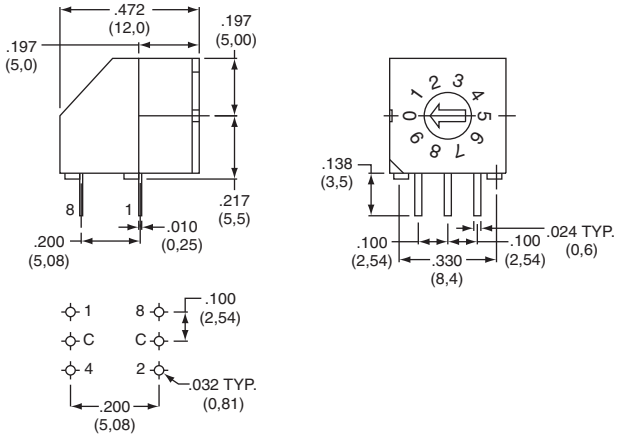

S SURFACE MOUNT

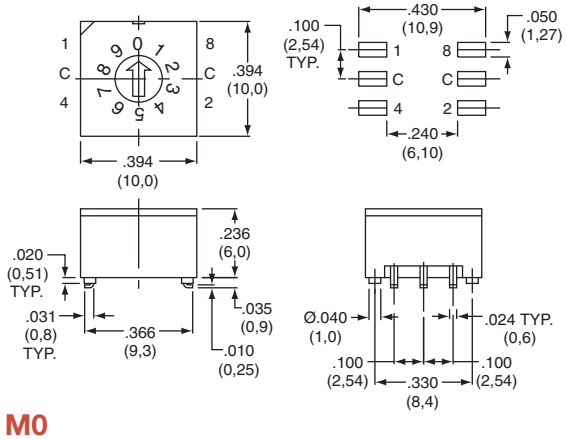

M0

CONTACT MATERIAL

OPTION CODE	RoHS COMPLIANT*	RoHS COMPATIBLE*	CONTACT MATERIAL	TERMINAL PLATING	RATING	
B	YES	YES	GOLD	GOLD	LOW LEVEL/DRY CIRCUIT	0.4 VC MAX. @ 20 V AC or DC MAX.

* Note: See Technical Data section of this catalog for RoHS compliant and compatible definitions and specifications.

TAPE & REEL

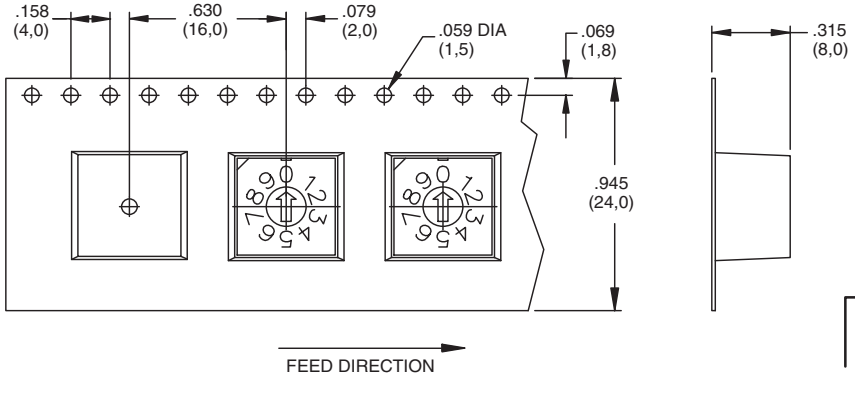

Third Angle Projection

Dimensions are shown: Inch (mm)
Specifications and dimensions subject to change

Slides
Product Selection Guide

Slide								
Series	**ES**	**TS**	**1000**	**GS**	**L**	**LP**	**S**	**V**
Switch Type	Tiny	Tiny	Miniature	Ultra-miniature	Miniature	Miniature	Power	Power & Line Voltage
Poles	1 & 2	1	1 & 2	1	1 & 2	1 & 2	1 & 2	1 & 2
Momentary			•		•		•	
Process Sealed	•			•				
Splashproof	•				•			
Screwdriver Slot					•		•	•
Housing Marking						•	•	
Tape & Reel	•			•				
Max. Current	0.4 VA	3 A	6 A	0.4 VA	4 A	11 A	15 A	10.1 A
Terminations								
Wire Wrap		•	•		•			
Quick Connect			•				•	•
Wire Lead					•	•	•	
Solder Lug			•		•	•	•	
PC	•	•	•	•	•		•	•
PCB Mount Options								
Thru-hole	•	•	•	•	•	•	•	•
Vertical	•	•	•	•	•	•	•	•
Right Angle	•	•	•	•			•	•
Surface Mount	•			•				
Panel Mount Options								
Snap-in						•	•	•
Mounting Ears			•		•		•	•
Right Angle	•	•	•	•			•	•
Page No.	I–4	I–8	I–11	I–17	I–19	I–25	I–28	I–33

Slide				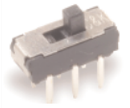				
Series	**OS**	**PCM**	**AYZ**	**JS**	**JSM**	**JSX**	**SK**	**SS**
Switch Type	Miniature	Low Profile	Low Profile	Low Profile	Low Profile	Low Profile	Miniature	Miniature
Poles	1 & 2	1 & 2	1 & 2	1 & 2	1	1	1, 2 & 4	1, 2 & 4
Momentary					•	•		
Process Sealed								
Splashproof								
Screwdriver Slot								
Housing Marking								
Tape & Reel		•		•	•	•		
Max. Current	200mA	0.3A	100mA	0.3A	0.3A	0.3A	0.3A	0.3A
Terminations								
Wire Wrap								
Quick Connect								
Wire Lead								
Solder Lug	•							
PC	•	•	•	•			•	•
PCB Mount Options								
Thru-hole	•			•			•	•
Vertical	•			•				•
Right Angle	•			•			•	
Surface Mount		•	•	•	•	•	•	•
Panel Mount Options								
Snap-in								
Mounting Ears	•							•
Right Angle								
Page No.	I–37	I–44	I–46	I–49	I–55	I–60	I–61	I–91

ES Series
Sealed Tiny Slide Switches

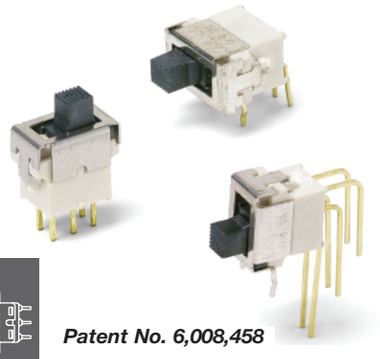

Patent No. 6,008,458

Features/Benefits

- ***Process compatible—internal o-ring and epoxy base seal***
- ***Thru-hole & surface mount models***
- ***Reliable contact design ensures long electrical life***
- ***Robust actuator for easy actuation***
- ***RoHS compliant***

Typical Applications

- ***Computer peripherals & network products***
- ***Test & measurement equipment***
- ***Telephone & cable modems***

Specifications

CONTACT RATING: 0.4 VA max. @ 20 V AC or DC max.

MECHANICAL & ELECTRICAL LIFE: 40,000 make-and-break cycles at full load.

CONTACT RESISTANCE: 50 m Ω max. initial @ 2-4 V DC, 100 mA.

INSULATION RESISTANCE: 10^9 Ω min.

DIELECTRIC STRENGTH: 500 Vrms min.

OPERATING TEMPERATURE: –30ºC to 85ºC.

SOLDERABILITY: Per MIL-STD-202F method 208D, or EIA RS-186E method 9.

DEGREE OF PROTECTION: IP57; Protection against harmful dust deposit, full-scale voltage protection, temporary immersion.

ESD ENDURANCE: 8kv min. (EIA 545).

PACKAGING: Thru-hole switches supplied in anti-static trays. Surface mount switches available in tape and reel packaging.

Materials

HOUSING & BASE: Nylon (UL 94V-0).

ACTUATOR: LCP (UL 94V-0) black, standard.

SURFACE PLATE: Stainless steel with tin plate.

MOVABLE CONTACT: Bronze with gold plate over nickel plate.

STATIONARY CONTACTS: Copper alloy, with gold plate over nickel plate.

TERMINALS: Copper alloy, with gold over nickel plate. All terminals insert molded.

BASE & TERMINAL SEAL: Epoxy.

NOTE: All models RoHS compliant and compatible with all options.

NOTE: Specifications and materials listed above are for switches with standard options. For information on specific and custom switches, consult Customer Service Center.

How To Order

Complete part numbers for ES Series Sealed Tiny Slide Switches are shown on pages I-5 through I-7. These unique tiny slide switches are process compatible. An internal o-ring and epoxy base seal protects the switch from wave and reflow soldering, as well as cleaning processes.

PART NUMBER	SWITCH FUNCTION POS. 1	POS. 2	POS. 3
ES01MCBE	ON	NONE	ON
ES03MCBE	ON	OFF	ON
CONN. TERMINALS	2-3	OPEN	2-1
SCHEMATIC SPDT		2 (COMM), 1, 3	
ES02MCBE	OFF	NONE	ON
CONN. TERMINALS	OPEN	N/A	3-1
SCHEMATIC SPST		1, 3	

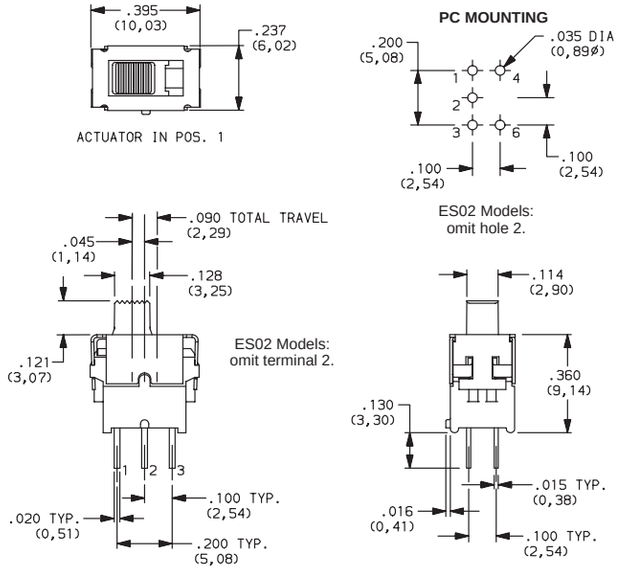

ES01MCBE
SPDT

Third Angle Projection

Dimensions are shown: Inch (mm)
Specifications and dimensions subject to change

ES21MCBE
DPDT

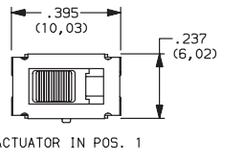

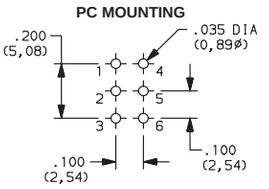

ES02 Models:
omit holes 2 & 5.

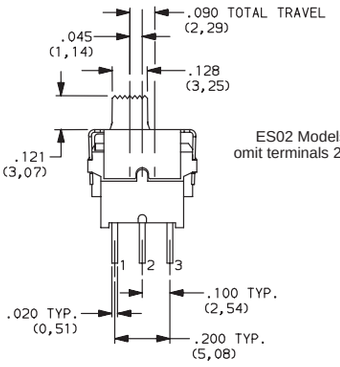

ES02 Models:
omit terminals 2 & 5.

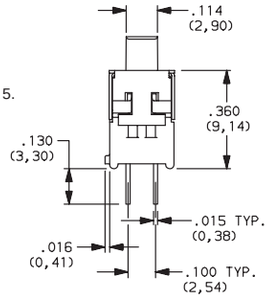

PART NUMBER	SWITCH FUNCTION		
		POS. 1 POS. 3	POS. 2
ES21MCBE	ON	NONE	ON
ES23MCBE	ON	OFF	ON
CONN. TERMINALS	2-3, 5-6	OPEN	2-1, 5-4
SCHEMATIC DPDT	1 ● ●3 ●2 (COMM) 4 ● ●6 ●5 (COMM)		
ES22MCBE	OFF	NONE	ON
CONN. TERMINALS	OPEN	N/A	3-1, 6-4
SCHEMATIC DPST	1 ● ●3 4 ● ●6		

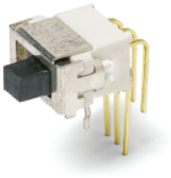

ES21MABE
DPDT

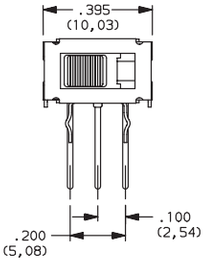

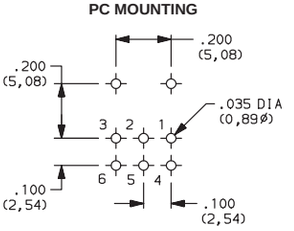

ES02 Models:
omit holes 2 & 5.

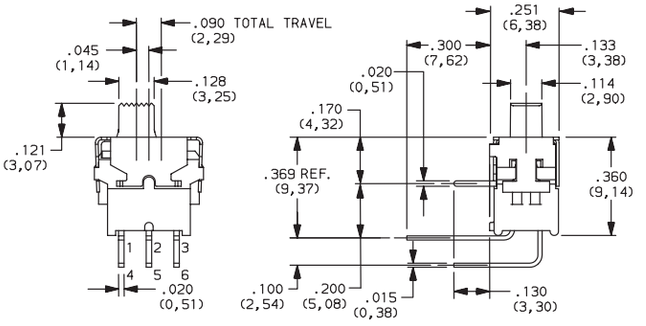

ES22 Models:
omit terminals 2 & 5.

PART NUMBER	SWITCH FUNCTION		
	POS. 1	POS. 2	POS. 3
ES21MABE	ON	NONE	ON
ES23MABE	ON	OFF	ON
CONN. TERMINALS	2-3, 5-6	OPEN	2-1, 5-4
SCHEMATIC DPDT	1 ● ●3 ●2 (COMM) 4 ● ●6 ●5 (COMM)		
ES22MABE	OFF	NONE	ON
CONN. TERMINALS	OPEN	N/A	3-1
SCHEMATIC DPST	1 ● ●3 4 ● ●6		

Third Angle Projection

Dimensions are shown: Inches (mm)
Specifications and dimensions subject to change

ES Series
Sealed Tiny Slide Switches

PART NUMBER	SWITCH FUNCTION POS. 1	POS. 2	POS. 3
ES01MAVBE	ON	NONE	ON
ES03MAVBE	ON	OFF	ON
CONN. TERMINALS	2-3	OPEN	2-1
SCHEMATIC		2 (COMM), 1, 3	

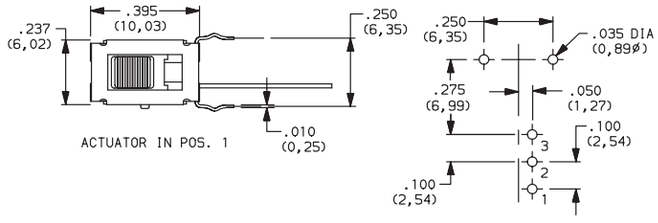

ES02 Models:
omit hole 2.

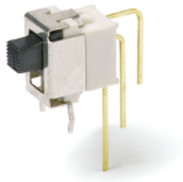

ES01MAVBE
SPDT

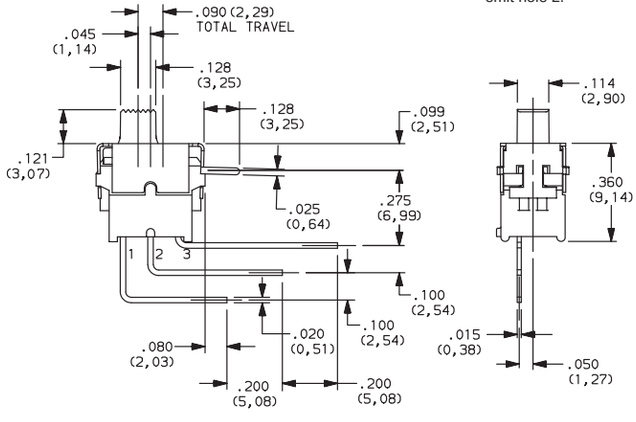

ES02 Models:
omit terminal 2.

PART NUMBER	SWITCH FUNCTION POS. 1	POS. 2	POS. 3
ES01MSABE	ON	NONE	ON
ES03MSABE	ON	OFF	ON
CONN. TERMINALS	2-3	OPEN	2-1
SCHEMATIC		2 (COMM), 1, 3	
SPDT			
ES02MSABE	OFF	NONE	ON
CONN. TERMINALS	OPEN	N/A	3-1
SCHEMATIC		1, 3	
SPST			

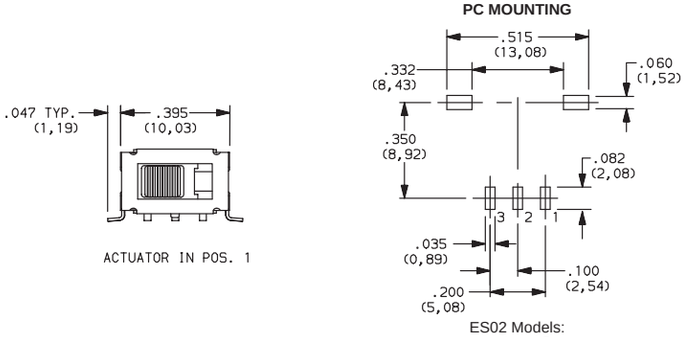

ES02 Models:
omit pad 2.

SMT

ES01MSABE
Horizontal Actuation
SPDT

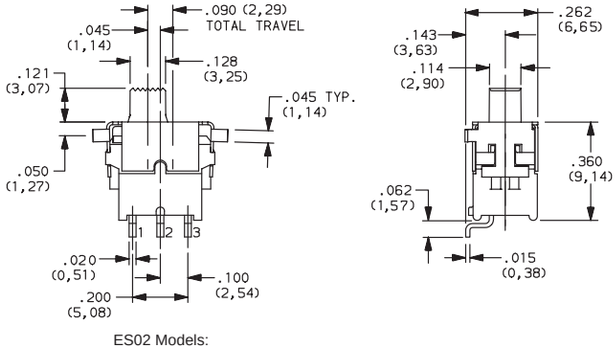

ES02 Models:
omit terminal 2.

Third Angle Projection

Dimensions are shown: Inch (mm)
Specifications and dimensions subject to change

TAPE & REEL

For part numbers ESXXMSABE

REEL INFORMATION	
OUTSIDE DIAMETER	13.00 (330,0)
PILOT HOLE	.512 (13,0)
QUANTITY PER REEL	300

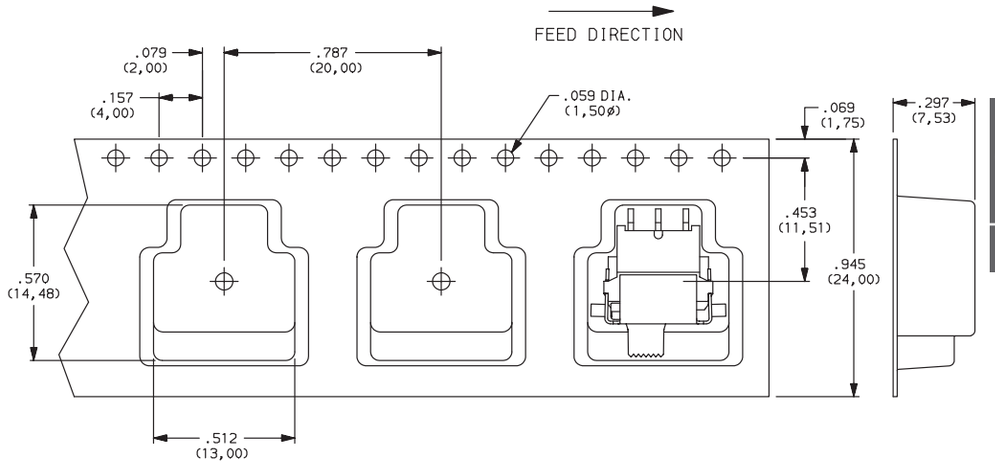

Third Angle Projection

Dimensions are shown: Inches (mm)
Specifications and dimensions subject to change

TS Series
Tiny Slide Switches

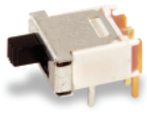

Models Available

Features/Benefits

- ***Reliable contact design ensures long electrical life***
- ***Ratings up to 3 AMPS***
- ***Epoxy terminal-seal compatible with bottom wash cleaning***
- ***RoHS compliant***

Typical Applications

- ***Test & measurement equipment***
- ***Computers & peripherals***
- ***Telecommunications & networking equipment***

Specifications

CONTACT RATING: B contact material: 0.4 VA max. @ 20 V AC or DC max. Q contact material (TS01 Model): 3 AMPS @ 120 V AC or 28 V DC; (TS02, TS03 Models): 1 AMP @ 120 V AC or 28 V DC. See page I-10 for additional ratings.

ELECTRICAL LIFE:
TS01 MODELS: 60,000 make-and-break cycles at full load.
TS02, TS03 MODELS: 30,000 cycles.

CONTACT RESISTANCE: Below 20 m Ω typ. initial @ 2-4 V DC, 100 mA, for both silver and gold plated contacts.

INSULATION RESISTANCE: 10^9 Ω min.

DIELECTRIC STRENGTH: 1,000 Vrms min. @ sea level.

OPERATING TEMPERATURE: –30°C to 85°C

SOLDERABILITY: Per MIL-STD-202F method 208D, or EIA RS-186E method 9 (1 hour steam aging).

Materials

CASE: Glass filled nylon 4/6, flame retardant, heat stabilized.

ACTUATOR: Nylon, black standard.

HOUSING: Stainless steel or stainless steel, nickel plated.

END CONTACTS: B contact material: Copper alloy, with gold plate over nickel plate. Q contact material: Coin silver, silver plated. See page I-10 for additional contact materials.

CENTER CONTACT & ALL TERMINALS: B contact material: Copper alloy, with gold plate over nickel plate. Q contact material: Copper alloy, silver plated. See page I-10 for additional contact materials.

TERMINAL SEAL: Epoxy. Refer to Soldering and Cleaning in Technical Data chapter.

NOTE: Any models supplied with Q, B, G, P, S or R contact material are RoHS compliant.

NOTE: Specifications and materials listed above are for switches with standard options. For information on specific and custom switches, consult Customer Service Center.

Build-A-Switch

To order, simply select desired option from each category and place in the appropriate box. Available options are shown and described on pages I–9 and I–10. For additional options not shown in catalog, consult Customer Service Center. All models have epoxy terminal seal and are compatible with all "bottom-wash" PCB cleaning methods.

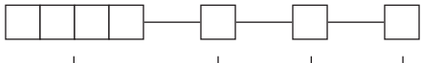

Switch Function
TS01 SPDT On-None-On
TS02 SPST Off-None-On
TS03 SPDT On-Off-On

Terminations
A Right angle, PC thru-hole (TS01 & TS03 models only)
C PC Thru-hole
W Wire wrap

Contact Material
B Gold
Q Silver
G Gold over silver
P Gold, matte-tin
S Silver, matte-tin
R Gold over silver, matte-tin

Seal
E Epoxy
F Epoxy seal and splashproof RTV latex rubber seal

SWITCH FUNCTION

NO. POLES	MODEL NO.	SWITCH FUNCTION POS. 1	SWITCH FUNCTION POS. 2	SWITCH FUNCTION POS. 3	CONNECTED TERMINALS POS. 1	CONNECTED TERMINALS POS. 2	CONNECTED TERMINALS POS. 3	SCHEMATIC
		C&K marking on opposite side			C&K marking on opposite side			
SP	TS01	ON	NONE	ON	1-2	OPEN	2-3	SPDT
	TS03	ON	OFF	ON				
	TS02	OFF	NONE	ON	OPEN	N/A	3-1	SPST

SPDT

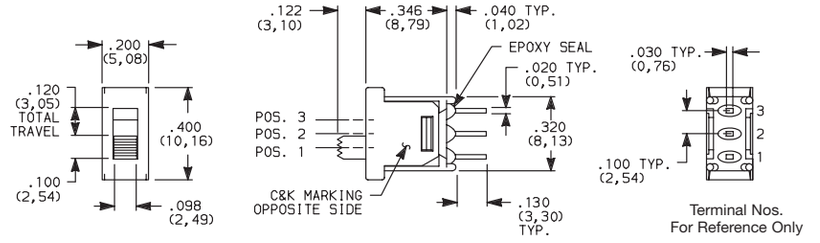

Part number shown: TS01CBE

All models c UL us with all options when ordered with G, Q, R or S contact material.

TS02 model not available with A terminations.

TERMINATIONS

C PC THRU-HOLE

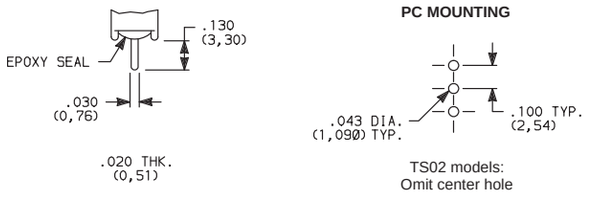

W WIRE WRAP

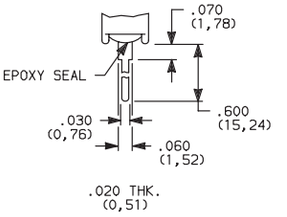

SPDT and SPST

A RIGHT ANGLE, PC THRU-HOLE

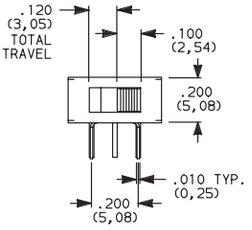

Actuator shown in pos. 1

SPDT and SPST

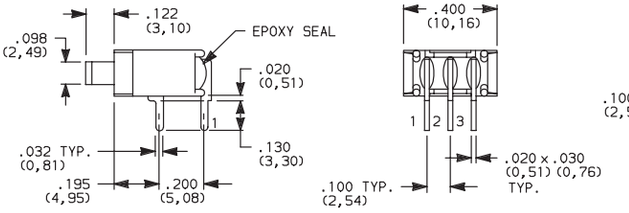

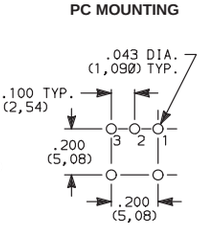

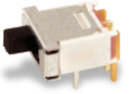

TS01ABE
Horizontal Actuation
SPDT

Not available with TS02 model.

Third Angle Projection

Dimensions are shown: Inches (mm)
Specifications and dimensions subject to change

TS Series
Tiny Slide Switches

CONTACT MATERIAL

OPTION CODE	CONTACT MATERIAL	TERMINAL PLATING	RATINGS	
B	GOLD [1]	GOLD [3]	LOW LEVEL/DRY CIRCUIT	0.4 VA MAX. @ 20 V AC OR DC MAX.
P		MATTE-TIN [6]		
Q	SILVER [4,5]	SILVER [5]	POWER	TS01 MODELS: 3 AMPS @ 120 V AC OR 28 V DC. TS02, TS03 MODELS: 1 AMP @ 120 V AC OR 28 V DC.
S		MATTE-TIN [6]		
G	GOLD OVER SILVER [2,3]	GOLD [3]	LOW LEVEL/DRY CIRCUIT OR POWER	TS01 MODELS: 0.4 VA MAX @20 V AC OR DC MAX. OR 3 AMPS @ 120 V AC OR 28 V DC. TS02, TS03 MODELS: 0.4 VA MAX @ 20 V AC OR DC MAX. OR 1 AMP @ 120 V AC OR 28 V DC.
R		MATTE-TIN [6]		

* Note: See Technical Data section of this catalog for RoHS compliant and compatible definitions and specifications.

[1] CONTACTS & TERMINALS: Copper alloy, with gold plate over nickel plate.
[2] END CONTACTS: Coin silver, with gold plate over nickel plate.
[3] CENTER CONTACTS & ALL TERMINALS: Copper alloy, with gold plate over nickel plate.
[4] END CONTACTS: Coin silver, silver plated.
[5] CENTER CONTACT & ALL TERMINALS: Copper alloy, silver plated.
[6] TERMINALS: Copper alloy, with matte-tin over nickel plate

All models c UL us with all options when ordered with G, S or R contact material.

B contact material standard with A and W terminations.

Q contact material standard with C terminations.

NOTE: Any models supplied with Q, B, G, P, S or R contact material are RoHS compliant.

SEAL

E EPOXY SEAL

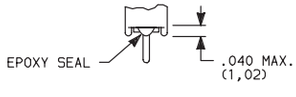

F EPOXY SEAL AND SPLASHPROOF RTV LATEX RUBBER SEAL

NOTE: RTV latex rubber seal peels off easily after installation.
Epoxy terminal seal standard. Not available with A termination.

Third Angle Projection

Dimensions are shown: Inch (mm)
Specifications and dimensions subject to change

1000 Series
Miniature Slide Switches

Features/Benefits

- ***Variety of actuators and terminations***
- ***Panel mount tabs available***
- ***Epoxy terminal seal—compatible with bottom-wash cleaning***
- ***RoHS compliant***

Typical Applications

- ***Test & measurement equipment***
- ***Telecommunications***
- ***Computer & peripherals***

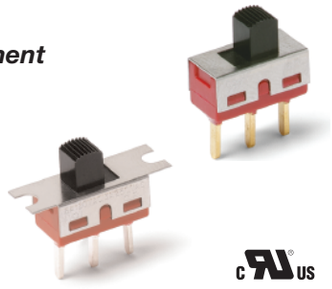

Models Available

Specifications

CONTACT RATING: B contact material: 0.4 VA max. @ 20 V AC or DC max. Q contact material: 6 AMPS @ 120 V AC or 28 V DC, 3 AMPS @ 250 V AC. See page I-16 for additional ratings.

ELECTRICAL LIFE: 100,000 make-and-break cycles at full load on models with B, K or P contact material; 40,000 cycles on models with G, Q, L, M, S or R contact material.

CONTACT RESISTANCE: Below 10 m Ω typ. initial @ 2-4 V DC, 100 mA, for both silver and gold plated contacts.

INSULATION RESISTANCE: 10^9 Ω min.

DIELECTRIC STRENGTH: 1,000 Vrms min. @ sea level.

OPERATING TEMPERATURE: –30ºC to 65ºC

SOLDERABILITY: Per MIL-STD-202F method 208D, or EIA RS-186E method 9 (1 hour steam aging).

Materials

CASE: diallyl phthalate (DAP), (UL 94V-0).

ACTUATOR: Nylon, black, standard.

HOUSING: Stainless steel.

SWITCH SUPPORT: Brass or steel, matte-tin plated.

END CONTACTS: B contact material: Copper alloy, with gold plate over nickel plate. Q contact material: Coin silver, silver plated. See page I-16 for additional contact materials.

CENTER CONTACT & ALL TERMINALS: B contact material: Copper alloy, with gold plate over nickel plate. Q contact material: Copper alloy, silver plated. See page I-16 for additional contact materials.

TERMINAL SEAL: Epoxy. Refer to Soldering and Cleaning in Technical Data chapter

NOTE: Any models supplied with Q, B, G, P, S or R contact material are RoHS compliant.

NOTE: Specifications and materials listed above are for switches with standard options.

For information on specific and custom switches, consult Customer Service Center.

Build-A-Switch

To order, simply select desired option from each category and place in the appropriate box. Available options are shown and described on pages I–12 through I–16. For additional options not shown in catalog, consult Customer Service Center. All models have epoxy terminal seal and are compatible with all “bottom-wash” PCB cleaning methods.

Switch Function
- **1101** SP On-None-On
- **1103** SP On-Off-On
- **1108** SP Mom-None-On
- **1201** DP On-None-On
- **1203** DP On-Off-On

Mounting Style
- **M2** PC mount without tabs
- **M1** Panel mount with tabs

Actuator
- **S3** .200" high
- **S1** .040" high
- **S2** .140" high
- **S4** .285" high
- **S5** .370" high
- **S6** .485" high
- **T3** .200" high

Terminations
- **A** Right angle, PC thru-hole
- **C** PC Thru-hole
- **AV2** Vertical right angle, PC thru-hole
- **Z** Solder lug
- **V3** V-bracket
- **V4** V-bracket
- **W** .750" long, wire wrap
- **Z3** Quick connect

Contact Material
- **B** Gold
- **Q** Silver
- **G** Gold over silver
- **P** Gold, matte-tin
- **S** Silver, matte-tin
- **R** Gold over silver, matte-tin

Seal
- **E** Epoxy
- **D** No epoxy seal
- **I** Epoxy potted base

Actuator Color
- **2** Black
- **1** White
- **3** Red

Dimensions are shown: Inches (mm)
Specifications and dimensions subject to change

1000 Series
Miniature Slide Switches

SWITCH FUNCTION

NO. POLES	MODEL NO.	SWITCH FUNCTION POS. 1	SWITCH FUNCTION POS. 2	SWITCH FUNCTION POS. 3	CONNECTED TERMINALS POS. 1	CONNECTED TERMINALS POS. 2	CONNECTED TERMINALS POS. 3	SCHEMATIC
SP	1101	ON	NONE	ON	1-2	N/A	2-3	SPDT
	1103	ON	OFF	ON		OPEN		
	1108	MOM.	NONE	ON		N/A		

SPDT

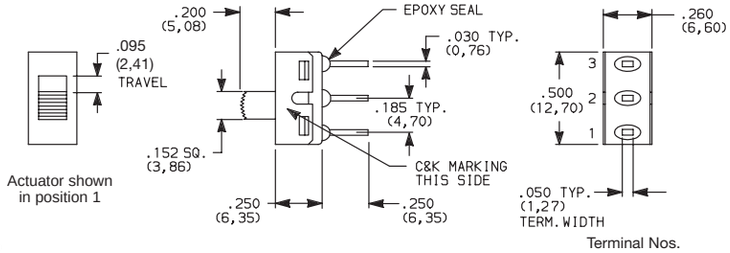

Part number shown: 1101M2S3CQE2

DP	1201	ON	NONE	ON	2-1,5-4	OPEN	2-3,5-6	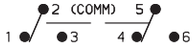 DPDT
	1203	ON	OFF	ON				

DPDT

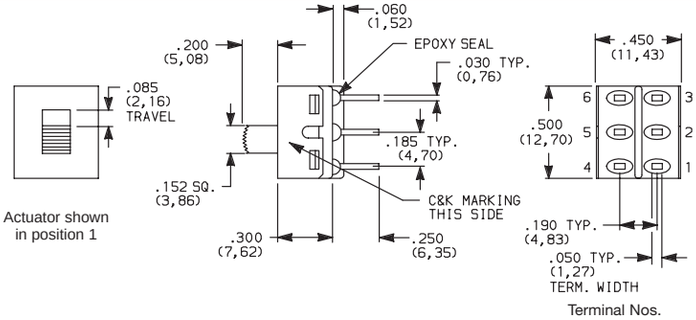

Part number shown: 1201M2S3CQE2

MOM. = Momentary

All models c UL us with all options when ordered with G, Q, S or R contact material.

MOUNTING STYLE

M2 PC MOUNTING WITHOUT TABS

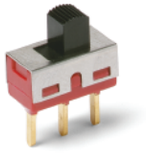

NOTE: Available with A, AV2, C, V3, V4, W terminations only.

M1 PANEL MOUNTING WITH TABS

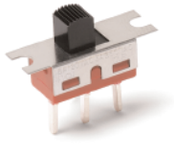

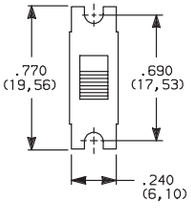

NOTE: Available with C, W, Z, Z3 terminations only.
No mounting hardware supplied.

PANEL MOUNTING

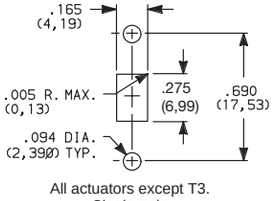

All actuators except T3.
Single pole

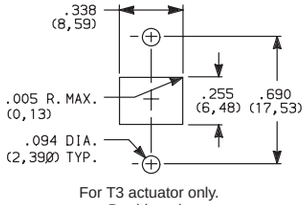

For T3 actuator only.
Double pole

Third Angle Projection

Dimensions are shown: Inch (mm)
Specifications and dimensions subject to change

ACTUATOR

ACTUATOR COLOR
ACTUATOR

S3 .200" HIGH

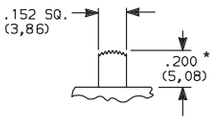

S2 .140" HIGH

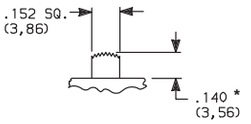

110X models only.

S1 .040" HIGH

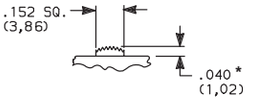

120X models only.

S4 .285" HIGH

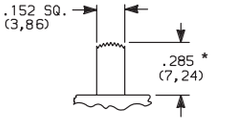

S5 .370" HIGH

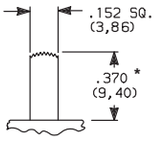

S6 .485" HIGH

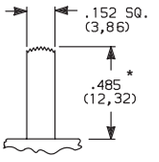

T3 .200" HIGH

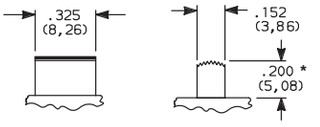

120X models only.

OPTION CODE	ACTUATOR COLOR
2	BLACK
1	WHITE
3	RED
7	BLUE
9	GRAY

Other colors available, consult Customer Service Center.

* Subtract .014 (0,36) from actuator height, all models with A, AV2 - 2 pole, V3, V4 terminations.

TERMINATIONS

Z SOLDER LUG

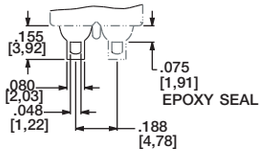

Not available with P, S or R contact materials.

SPDT & DPDT

C PC THRU-HOLE

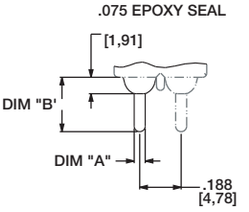

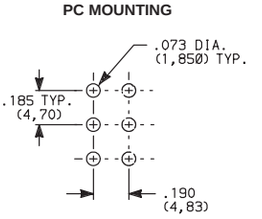

OPTION	DIM "A"	DIM "B"
C	.050 [0,76]	.250 [6,35]

SPDT & DPDT

Z3 QUICK CONNECT

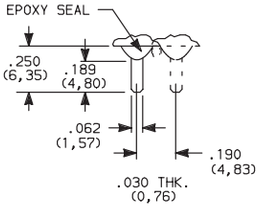

Not available with P, S or R contact materials. Mating quick connector available; order part number 530100000, page I-16.

SPDT & DPDT

W WIRE WRAP

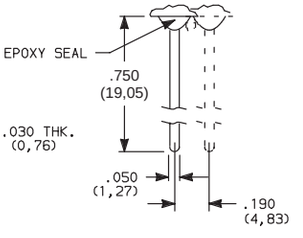

SPDT & DPDT

Third Angle Projection

Dimensions are shown: Inches (mm)
Specifications and dimensions subject to change

TERMINATIONS

A RIGHT ANGLE, PC THRU-HOLE

1101M2S3ABE2
Horizontal Actuation
SPDT

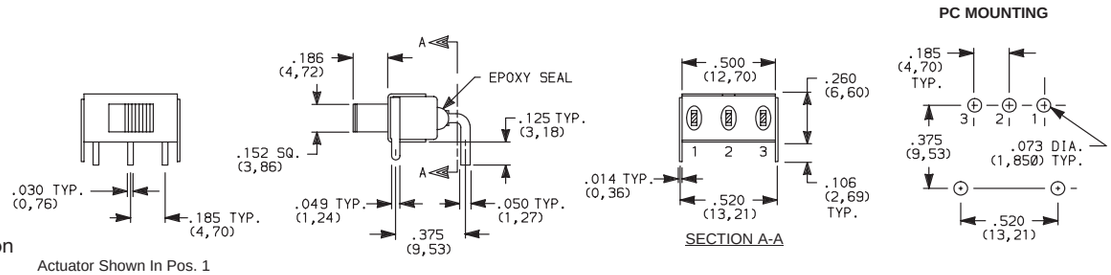

Actuator Shown In Pos. 1

Not available with M1 mounting style, I seal option.
Terminal bend radii and lead-in manufacturing option.

A RIGHT ANGLE, PC THRU-HOLE

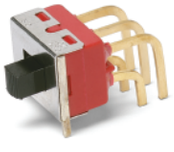

1201M2S3ABE2
Horizontal Actuation
DPDT

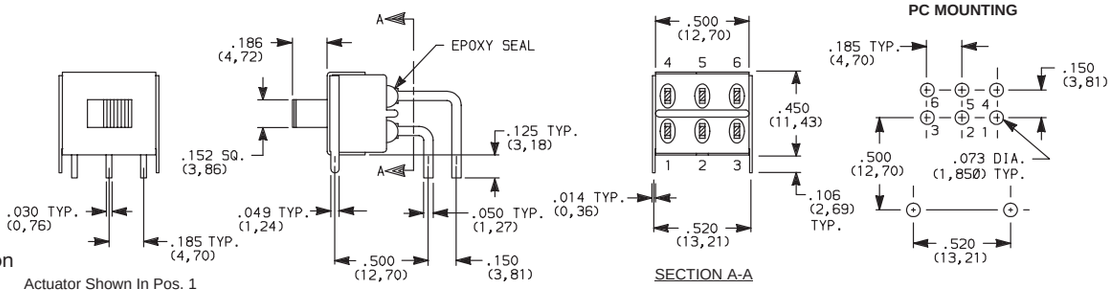

Actuator Shown In Pos. 1

Not available with M1 mounting style, I seal option.
Terminal bend radii and lead-in manufacturing option.

AV2 VERTICAL RIGHT ANGLE, PC THRU-HOLE, .150" PITCH

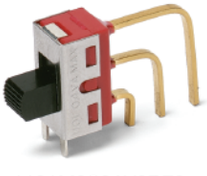

1101M2S3AV2BE2
Vertical Actuation
SPDT

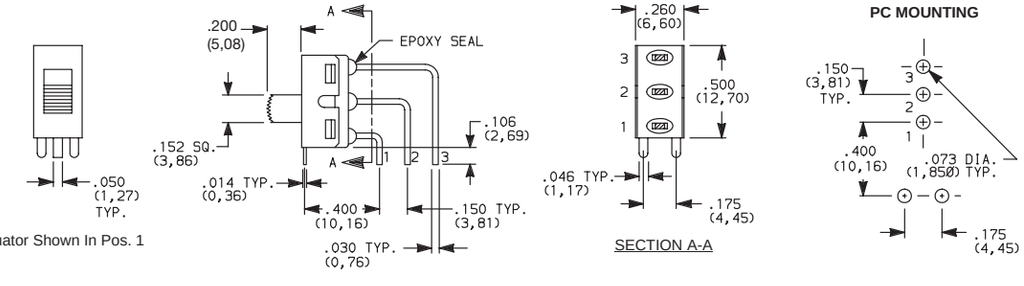

Actuator Shown In Pos. 1

Not available with M1 mounting style, I seal option.
Terminal bend radii and lead-in manufacturing option.

Third Angle Projection

Dimensions are shown: Inch (mm)
Specifications and dimensions subject to change

TERMINATIONS

AV2

VERTICAL RIGHT ANGLE, PC THRU-HOLE, .150" PITCH

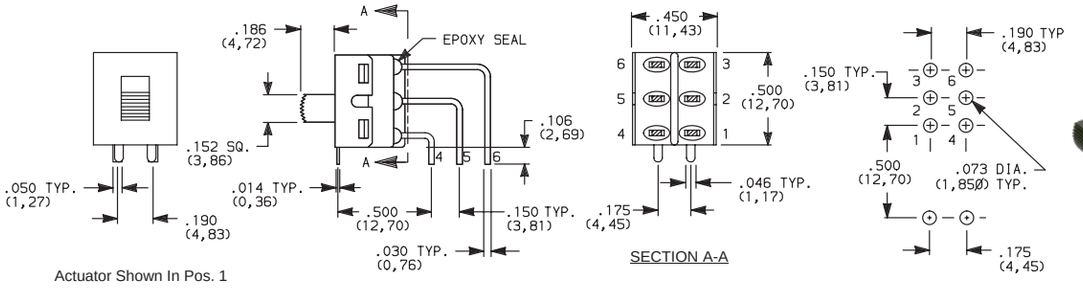

Actuator Shown In Pos. 1

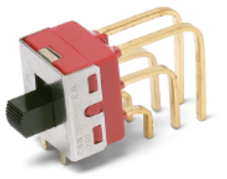

1201M2S3AV2BE2
Vertical Actuation
DPDT

Not available with M1 mounting style, I seal option.
Terminal bend radii and lead-in manufacturing option.

V3, V4

VERTICAL MOUNT, V-BRACKET

OPTION CODE	DIM 'A'
V3	.350 (8,89)
V4	.525 (13,34)

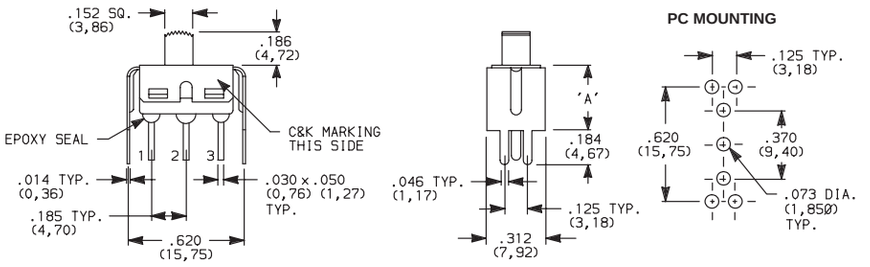

Actuator Shown In Pos. 1

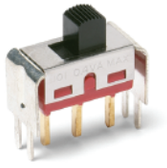

1101M2S3__BE2
SPDT

Not available with
M1 mounting style and I seal.

V3, V4

VERTICAL MOUNT, V-BRACKET

OPTION CODE	DIM 'A'
V3	.400 (10,16)
V4	.575 (14,61)

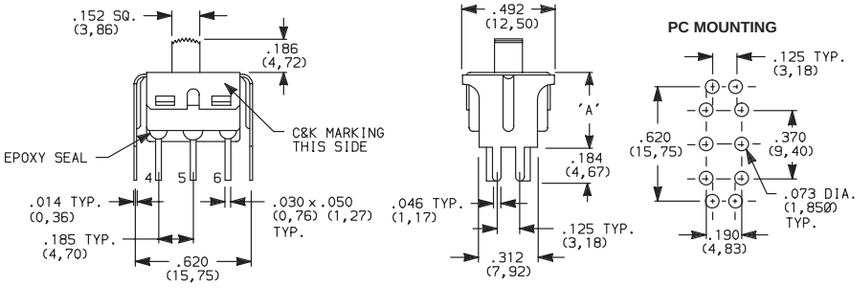

Actuator Shown In Pos. 1

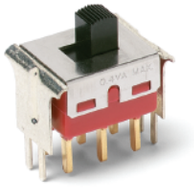

1201M2S3__BE2
DPDT

Not available with
M1 mounting style and I seal.

Third Angle Projection

Dimensions are shown: Inches (mm)
Specifications and dimensions subject to change

1000 Series
Miniature Slide Switches

CONTACT MATERIAL

OPTION CODE	CONTACT MATERIAL	TERMINAL PLATING	RATINGS	
B	GOLD [1]	GOLD [3]	LOW LEVEL/ DRY CIRCUIT	0.4 VA MAX. @ 20 V AC OR DC MAX.
P		MATTE-TIN [6]		
Q	SILVER [4,5]	GOLD [3]	POWER	6 AMPS @ 120 V AC OR 28 V DC; 3 AMPS @ 250 V AC.
S		MATTE-TIN [6]		
G	GOLD OVER SILVER [2,3]	GOLD [3]	LOW LEVEL/DRY CIRCUIT OR POWER	0 4 VA MAX @ 20 V AC OR DC MAX OR 6 AMPS @ 120 V AC OR 0.4 MAX. 28 V DC; 3 AMPS @ 250 V AC.
R		MATTE-TIN [6]		

* Note: See Technical Data section of this catalog for RoHS compliant and compatible definitions and specifications.

[1] CONTACTS & TERMINALS: Copper alloy, with gold plate over nickel plate.

[2] END CONTACTS: Coin silver, with gold plate over nickel plate.

[3] CENTER CONTACTS & ALL TERMINALS: Copper alloy, with gold plate over nickel plate.

[4] END CONTACTS: Coin silver, silver plated.

[5] CENTER CONTACT & ALL TERMINALS: Copper alloy, silver plated.

[6] TERMINALS: Copper alloy, with matte-tin over nickel plate.

NOTE: Any models supplied with Q, B, G, P, S or R contact material are RoHS compliant.

All models c UL us with all options when ordered with G, Q, S or R contact material.

B contact material standard with all terminations except C, Z, Z3..

Q contact material standard with C, Z, Z3 terminations.

P, S or R contact materials not available with Z, Z3 terminations.

SEAL

E EPOXY SEAL

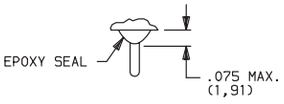

D NO EPOXY SEAL

I EPOXY POTTED BASE

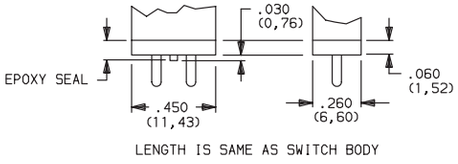

NOTE: Available with C, W, W3, Z, Z3 terminations only.

AVAILABLE HARDWARE

Fits Z3 Termination female connector

PART NO.

530100000

Available in loose pieces.

Third Angle Projection

Dimensions are shown: Inch (mm)

Specifications and dimensions subject to change

Features/Benefits

- *Ultraminiature design saves PCB space*
- *Sealed construction, process compatible with most PCB wash processes*
- *Available in thru-hole and surface mount*
- *Long life contact design*
- *RoHS compliant*

Typical Applications

- *Computer peripherals & network products*
- *Test & measurement equipment*
- *Telephone & cable modems*

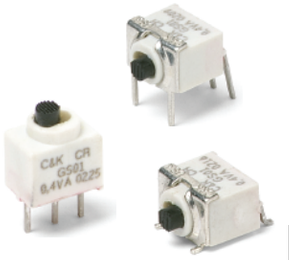

Specifications

CONTACT RATING: 0.4 VA max. @ 20 V AC or DC max.

MECHANICAL & ELECTRICAL LIFE: 40,000 make-and-break cycles at full load.

CONTACT RESISTANCE: Below 50 m Ω typ. initial @ 2–4 V DC, 100 mA.

INSULATION RESISTANCE: 10^9 Ω min.

DIELECTRIC STRENGTH: 500 Vrms min. @ sea level.

STORAGE & OPERATING TEMPERATURE: –40°C to 85°C.

SOLDERABILITY: Per MIL-STD-202F method 208D, or EIA RS-186E method 9 (1 hour steam aging).

PACKAGING: Switches available in embossed anti-static tape and reels per EIA 481A. Some models available on embossed anti-static tape and reels per EIA 481-3, consult Customer Service Center.

Materials

HOUSING & BASE: Glass filled 4/6, flame retardant, heat stabilized (UL 94V-0).

ACTUATOR: Polyetherimide PEI (UL 94V-0), with standard internal seal.

SWITCH SUPPORT: Brass, matte-tin plated.

MOVABLE CONTACT: Copper with gold plate over nickel plate.

STATIONARY CONTACTS: Copper alloy, with gold plate over nickel plate.

TERMINALS: Copper alloy, with gold plate over nickel plate.

TERMINAL SEAL: Epoxy. All terminals insert molded.

NOTE: All models are RoHS compliant and compatible with all options.

NOTE: Specifications and materials listed above are for switches with standard options. For information on specific and custom switches, consult Customer Service Center.

How To Order

Complete part numbers for GS Series Sealed Ultraminiature Slide Switches are shown below and on page I–18.

PART NUMBER	SWITCH FUNCTION POS.1	SWITCH FUNCTION POS. 2	SCHEMATIC
GS01MCBE	ON	ON	2 (COMM) 1 3 SPDT
Conn. Terms.	2-1	2-3	
GS02MCBE	OFF	ON	1 3 SPST
Conn. Terms.	OPEN	3-1	
GS04MCBE	ON	OFF	1 3 SPST
Conn. Terms.	1-3	OPEN	

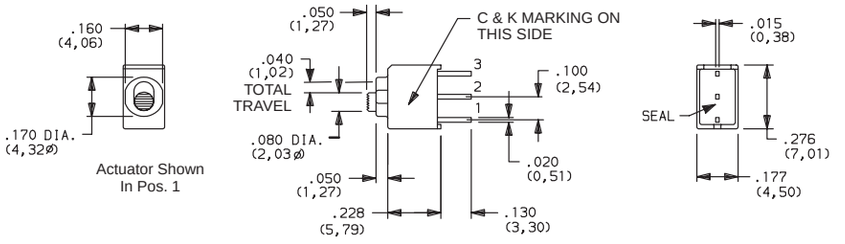

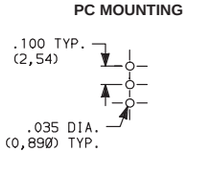

GS02-omit center hole.

GS02 Model

GS01MCBE
SPDT

Third Angle Projection

Dimensions are shown: Inches (mm)
Specifications and dimensions subject to change

GS Series
Sealed Ultraminiature Slide Switches

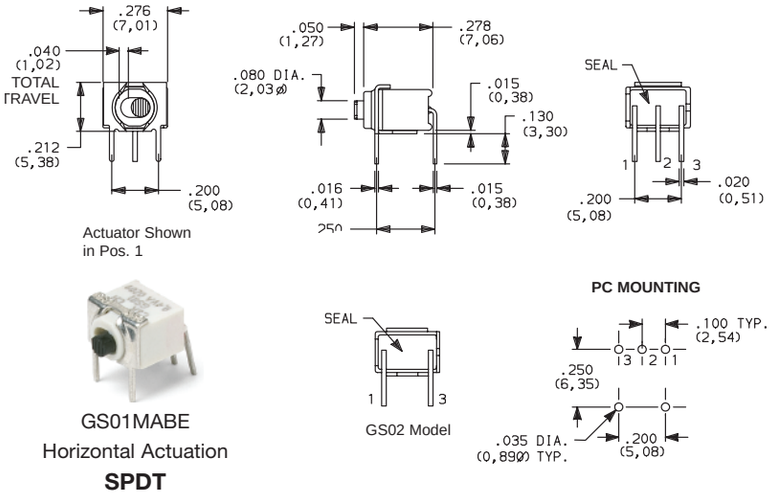

GS01MABE
Horizontal Actuation
SPDT

PART NUMBER	SWITCH FUNCTION POS.1	SWITCH FUNCTION POS. 2	SCHEMATIC
GS01MABE	ON	ON	2 (COMM) 1 3 SPDT
Conn. Terms.	2-1	2-3	
GS02MABE	OFF	ON	1 3 SPST
Conn. Terms.	OPEN	3-1	
GS04MABE	ON	OFF	1 3 SPST
Conn. Terms.	1-3	OPEN	

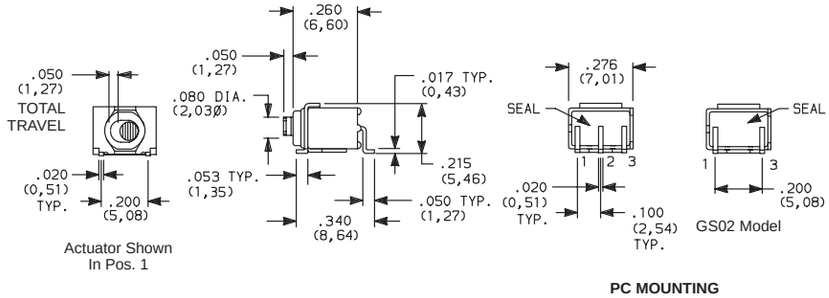

GS01MSABE
Horizontal Actuation
SPDT

PART NUMBER	SWITCH FUNCTION POS.1	SWITCH FUNCTION POS. 2	SCHEMATIC
GS01MSABE	ON	ON	2 (COMM) 1 3 SPDT
Conn. Terms.	2-1	2-3	
GS02MSABE	OFF	ON	3 1 SPST
Conn. Terms.	OPEN	3-1	
GS04MSABE	ON	OFF	1 3 SPST
Conn. Terms.	1-3	OPEN	

TAPE & REEL

FOR PART NUMBERS GS01MSABE, GS02MSABE, GS04MSABE

REEL INFORMATION	
OUTSIDE DIAMETER	13.00 (330,0)
PILOT HOLE	.512 (13,0)
QUANTITY PER REEL	600

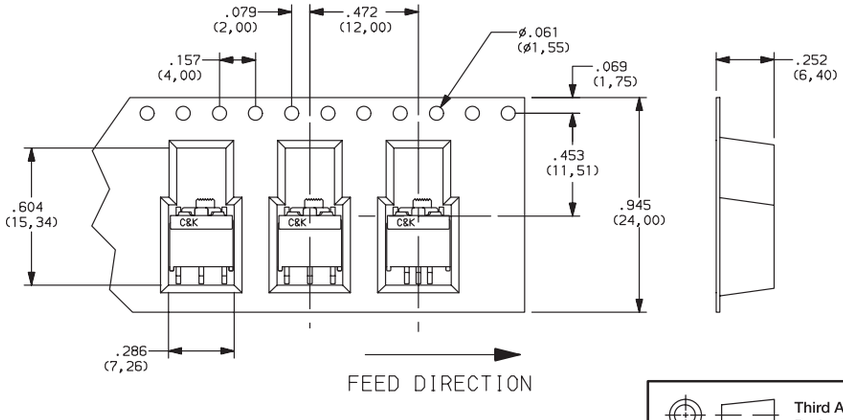

Third Angle Projection

Dimensions are shown: Inch (mm)
Specifications and dimensions subject to change

Features/Benefits

- *Positive detent*
- *Enclosed housing*
- *Maintained and momentary functions*
- *PC and panel mounting*
- *RoHS compliant*

Typical Applications

- *Communications equipment*
- *Lighting devices*

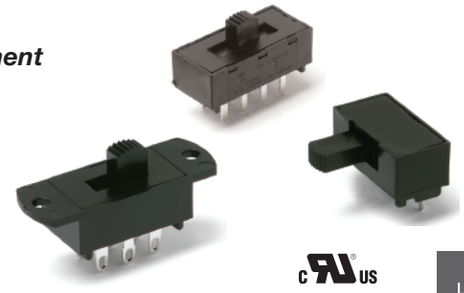

Models Available

Specifications

CONTACT RATING: Q contact material (LX0X, LX1X Models): 4 AMPS @ 125 V AC or 28 V DC; 2 AMPS @ 250 V AC; 0.5 AMP @ 125 V DC (UL). See page I-23 for additional ratings.

ELECTRICAL LIFE: 10,000 make-and-break cycles at full load.

CONTACT RESISTANCE: Below 10 m Ω typ. initial @ 2-4 V DC, 100 mA, for both silver and gold plated contacts.

INSULATION RESISTANCE: 10^9 Ω min.

DIELECTRIC STRENGTH: 1,000 Vrms min. @ sea level.

OPERATING TEMPERATURE: -30°C to +65°C

STORAGE TEMPERATURE: -30°C to +85°C

NOTE: Specifications and materials listed above are for switches with standard options. For information on specific and custom switches, consult Customer Service Center.

Materials

HOUSING: 6/6 nylon (UL94V-2), black.

ACTUATOR: 6/6 nylon (UL94V-2), black. '13' actuator, natural (standard).

CONTACTS: Q contact material: Copper, silver plated. See page I-23 for additional contact materials.

TERMINALS: Q contact material: Copper, silver plated. See page I-23 for additional contact materials.

CONTACT SPRING: Music wire or stainless steel.

TERMINAL SEAL: Epoxy.

NOTE: Any models supplied with Q, B or G contact material are RoHS compliant.

Build-A-Switch

To order, simply select desired option from each category and place in the appropriate box. Available options are shown and described on pages I-20 through I-24. For additional options not shown in catalog, consult Customer Service Center.

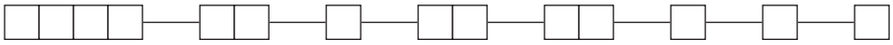

Switch Function
- **L202** DPDT
- **L203** DP3T
- **L101** SPST
- **L102** SPDT
- **L103** SP3T
- **L104** SP4T
- **L112** SPDT, mom.
- **L113** SP3T, mom. to one end
- **L123** SP3T, mom. to both ends
- **L201** DPST
- **L204** DP4T
- **L212** DPDT, mom.

Actuator
- **01** .200" high
- **02** .335" high
- **03** .375" high
- **05** .312" high
- **11** .100" high
- **12** Screwdriver slot
- **13** Plunger without cap
- **14** Plunger with .200" dia. cap
- **15** Plunger with .310" dia. cap
- **17** Plunger with .458" dia. cap
- **19** Plunger with .590" dia. cap

Detent
- **1** With detent
- **2** Without detent

Mounting Style
- **MS** PC Thru-hole
- **MA** Right angle, PC thru-hole
- **ML** Right angle, PC thru-hole
- **MV** Right angle, PC thru-hole
- **SS** Panel with mounting ears
- **TS** Panel with integral mounting ears

Terminations
- **02** PC Thru-hole
- **01** Solder lug with notch
- **03** Solder lug with hole
- **04** PC Thru-hole
- **10** PC Thru-hole
- **06** Wire wrap
- **12** PC Thru-hole

Contact Material
- **Q** Silver
- **B** Gold
- **G** Gold over silver

Seal
- **NONE** No seal
- **E** Epoxy seal

Cap Color
- **2** Black
- **NONE** No cap

Dimensions are shown: Inches (mm)
Specifications and dimensions subject to change

L Series
Miniature Slide Switches

SWITCH AND LOCK FUNCTION

NO. POLES	MODEL NO.	SWITCH FUNCTION	SCHEMATIC	AVAILABLE MOUNTING STYLES
SP	L101	SPST	1 2	ML, MS, SS
	L102	SPDT	1 2 3	ML, MS, SS
	L112	SPDT-MOM.	1 2 3	ML, MS, MV, SS
	L103	SP3T	1 2 3 4	MA, MS, TS
	L113	SP3T-MOM. to one end	1 2 3 4	MA, MS, TS
	L123	SP3T-MOM. to both ends	1 2 3 4	MA, MS, TS
	L104	SP4T	1 2 3 4 5	MS

NO. POLES	MODEL NO.	SWITCH FUNCTION	SCHEMATIC	AVAILABLE MOUNTING STYLES
DP	L201	DPST	1 2 / 4 5	MA, MS, SS
	L202	DPDT	1 2 3 / 4 5 6	MA, MS, SS
	L212	DPDT-MOM.	1 2 3 / 4 5 6	MV
	L203	DP3T	1 2 3 4 / 5 6 7 8	MS, TS
	L204	DP4T	1 2 3 4 5 / 6 7 8 9 10	MS

NOTE: and MOM. in table indicates momentary action.

All models with all options when ordered with 'G' or 'Q' contact material.

Contacts make on side actuator thrown.

ACTUATOR

CAP COLOR

ACTUATOR

ACTUATOR OPTIONS FOR 'MS, MA, ML, SS, & TS' MOUNTING STYLES

01 .200" HIGH

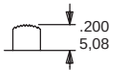

02 .335" HIGH

03 .375" HIGH

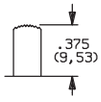

05 .312" HIGH

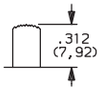

11 .100" HIGH

12 SCREWDRIVER SLOT

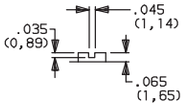

NOTE: No actuator color option code is required. Standard actuator color is black, other colors and heights available, consult Customer Service Center. See pages I-20 and I-22 for available mounting styles.

ACTUATOR OPTIONS FOR 'MV' MOUNTING STYLE

13 PLUNGER WITHOUT CAP

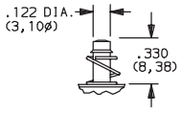

14 PLUNGER WITH CAP

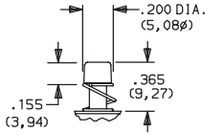

Cap part number 7089

15 PLUNGER WITH CAP

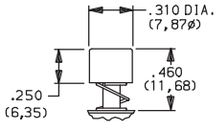

Cap part number 8018

17 PLUNGER WITH CAP

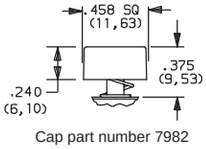

Cap part number 7982

19 PLUNGER WITH CAP

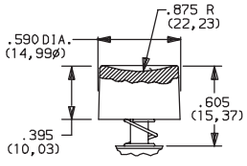

Cap part number 8940

OPTION CODE	ACTUATOR CAP COLORS
2	BLACK
NONE	01-13 ACTUATORS

Other colors available, consult Customer Service Center.

ACTUATOR CAPS

Caps supplied are not installed standard. To order actuator options '14 thru 19,' select desired cap color from chart and place option code in last box of ordering format. Leave box empty for all other actuator options. Caps may also be ordered separately and user installed, see pages I-23 and I-24. Specify the four digit part number and desired cap color. For switches without caps, order '13' or '23' actuator option. Cap finish: gloss (excluding square cap part number 7982, finish: matte).

SPLASH CAPS

New protective splash caps for PC mounted slide switches are available separately and reusable. They provide splash protection during soldering and cleaning processes. To order specify correct part number, see page I-24.

Third Angle Projection

Dimensions are shown: Inch (mm)
Specifications and dimensions subject to change

DETENT

1 WITH DETENT

Standard with all maintained models: L101, L102, L103, L104, L113, L201, L202, L203 and L204.

2 WITHOUT DETENT

Standard with all momentary models: L112, L123, and L212.

MOUNTING STYLE

MS PC THRU-HOLE, 2 POSITION MODELS

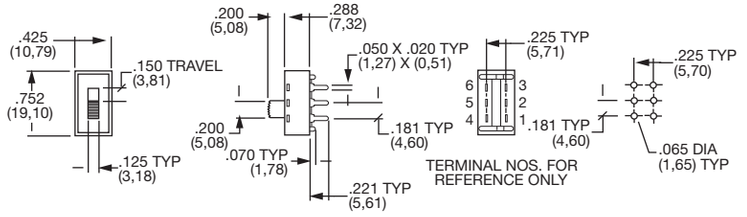

AVAILABLE WITH:

Models: L101, L102, L112, L103, L113 L123, L201, L202, L203, L104 and L204
Terminations: 02, 06, 10 and 12
Actuators: 01, 02, 03, 05, 11 and 12

PC MOUNTING

For mounting information, see TERMINATIONS section, page I-23.

Splash caps are available separately and reusable, see page I-24.

L203011MS02Q
DP3T

PC THRU-HOLE, 3 POSITION MODELS

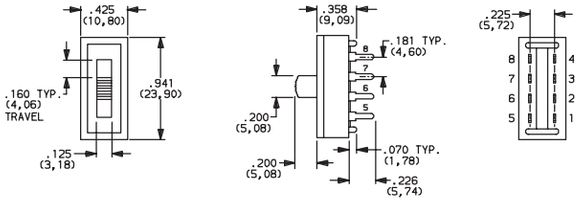

PC THRU HOLE, 4 POSITION MODELS

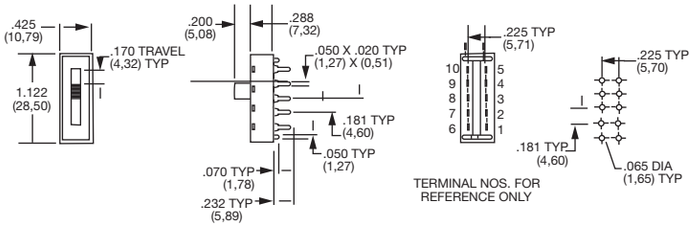

MA RIGHT ANGLE, PC THRU-HOLE

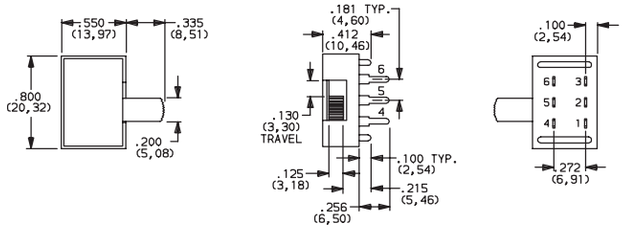

AVAILABLE WITH:

Models: L103, L201, L202, L113 and L123
Terminations: 04
Actuators: 02 and 12

PC MOUNTING

For mounting information, see TERMINATIONS section, page I-23.

Splash caps are available separately and reusable, see page I-24.

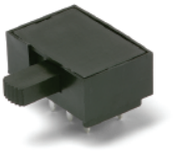

L202021MA04Q
Horizontal Actuation
DPDT

RIGHT ANGLE, PC, SP-3 POSITION MODELS

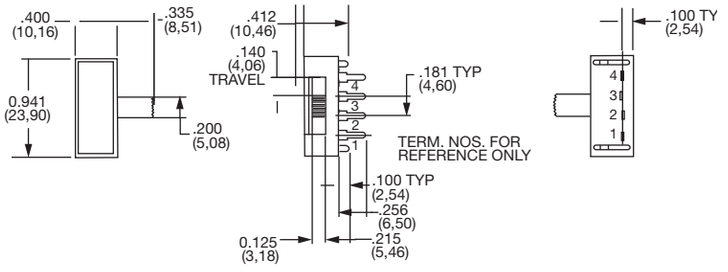

Third Angle Projection

Dimensions are shown: Inches (mm)
Specifications and dimensions subject to change

L Series
Miniature Slide Switches

MOUNTING STYLE

ML RIGHT ANGLE, PC THRU-HOLE

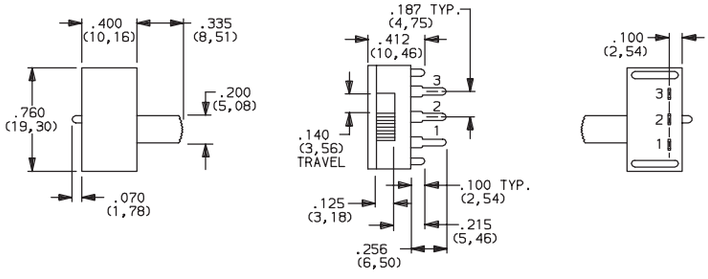

AVAILABLE WITH:

Models: L101, L102, L112
Terminations: 04
Actuators: 01, 02, 05, 11 and 12
PC MOUNTING

For mounting information, see TERMINATIONS section, page I-23.

Splash caps are available separately and reusable, see page I-24.

L102021ML04Q
Horizontal Actuation
SPDT

MV RIGHT ANGLE, PC THRU-HOLE

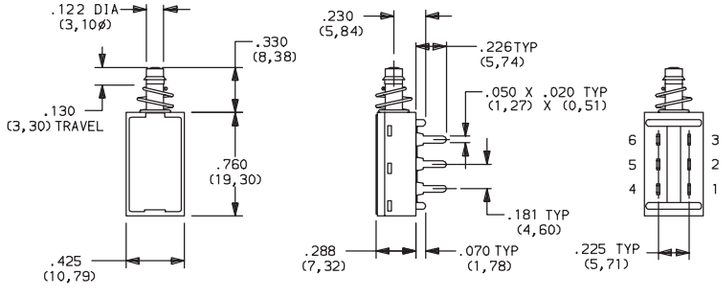

AVAILABLE WITH:

Models: L112 and L212
Terminations: 02, 06, 10 and 12
Actuators: 13 thru 19

PC MOUNTING

For mounting information, see TERMINATIONS section, page I-23.

Splash caps are available separately and reusable, see page I-24.

L212132MV02Q
DPDT

SS PANEL WITH MOUNTING EARS

L202011SS03Q
DPDT

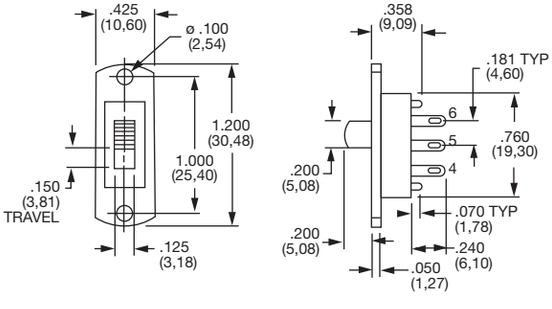

PANEL MOUNTING

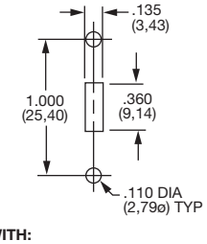

AVAILABLE WITH:

Models: L101, L102, L112, L201 and L202
Terminations: 01, 02, 03, 06, 10, 12
Actuators: 01, 02, 03, 05, 11 and 12

TS PANEL WITH INTEGRAL MOUNTING EARS

L203011TS03Q
DP3T

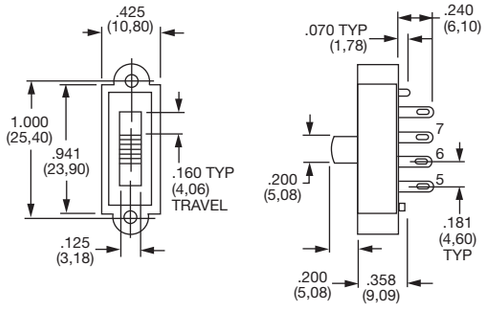

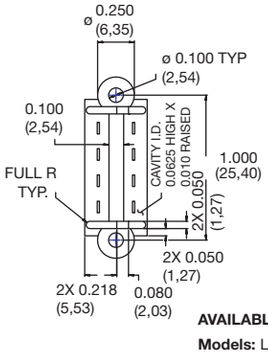

PANEL MOUNTING

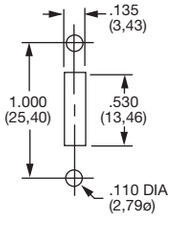

AVAILABLE WITH:

Models: L103, L113, L123 and L203
Terminations: 01, 02, 03, 06, 10, 12
Actuators: 01, 02, 03, 05, 11 and 12

Third Angle Projection

Dimensions are shown: Inch (mm)
Specifications and dimensions subject to change

TERMINATIONS

'MS, MV, SS & TS' Mounting Styles Only

02 PC THRU-HOLE

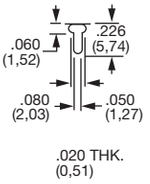

01 SOLDER LUG WITH NOTCH

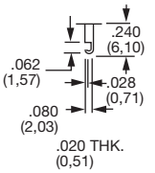

03 SOLDER LUG WITH HOLE

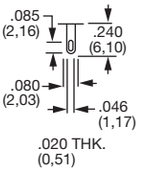

10 PC THRU-HOLE

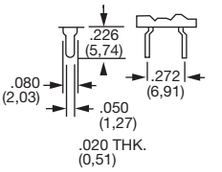

12 PC THRU-HOLE

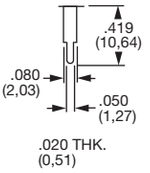

06 WIRE WRAP

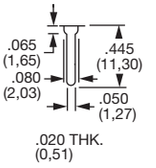

'MA & ML' Mounting Styles Only

04 PC THRU-HOLE

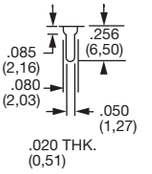

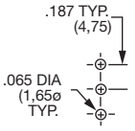

All models with '04' terminations and 'ML' mounting style.

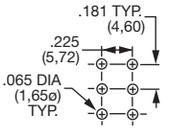

All 2 position models, except '04' and '10' terminations.

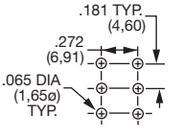

All 2 position models with '04' and '10' terminations.

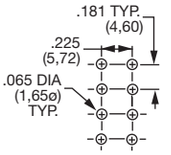

All 3 position models except '04' and '10' terminations.

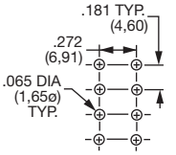

All 3 position models, with '10' termination.

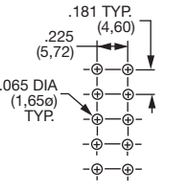

All 4 position models, except '04' and '10' terminations.

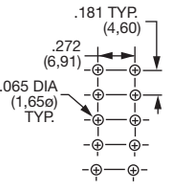

All 4 position models, with '10' terminations.

CONTACT MATERIAL

OPTION CODE	CONTACT MATERIAL	RATINGS	
Q	SILVER [2]	LOW LEVEL/DRY CIRCUIT	LX0X, LX1X MODELS: 4 AMPS @ 125 V AC or 28 V DC; 2 AMPS @ 250 V AC; 0.5 AMP @ 125 V DC (UL). LX6X MODELS: 4 AMPS @ 125 V AC or 28 V DC; 2 AMPS @ 250 V AC (UL).
B	GOLD [1]	POWER	0.4 VA MAX. @20 V AC OR DC max.
G	GOLD OVER SILVER [3]	LOW LEVEL/DRY CIRCUIT OR POWER	LX0X, LX1X MODELS: 0.4 VA MAX. @ 20 V AC or DC MAX. or 4 AMPS @ 125 V AC or 28 V DC; 2 AMPS @ 250 V AC; 0.5 AMP @ 125 V DC (UL). LX6X MODELS: 0.4 VA MAX. @ 20 V AC or DC MAX. or 4 AMPS @ 125 V AC or 28 V DC; 2 AMPS @ 250 V AC (UL).

* Note: See Technical Data section of this catalog for RoHS compliant and compatible definitions and specifications.

[1] CONTACTS & TERMINALS: Copper, with gold plate over nickel plate.
[2] CONTACTS & TERMINALS: Copper, silver plated (standard with all termination options).
[3] CONTACTS & TERMINALS: Copper, with gold plate over nickel plate over silver plate.

NOTE: Any models supplied with Q, B or G contact material are RoHS compliant.
All models c UL us with all options when ordered with 'G' or 'Q' contact material.
NOTE: 'G' contact material is equivalent to both 'B' and 'Q' contact materials.

SEAL

NONE NO SEAL

E EPOXY SEAL

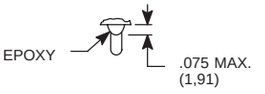

Third Angle Projection

Dimensions are shown: Inches (mm)
Specifications and dimensions subject to change

AVAILABLE HARDWARE

Cap
Compatible with 13-19 actuators

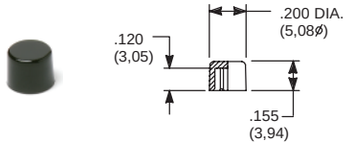

PART NO.
708902000 BLACK
708903000 RED

Material: Nylon
Finish: Gloss

Cap
Compatible with 13-19 actuators

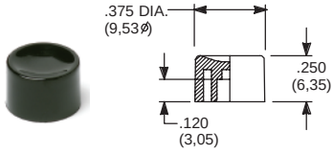

PART NO.
752702000 BLACK
752703000 RED

Material: Nylon
Finish: Gloss

Cap
Compatible with 13-19 actuators

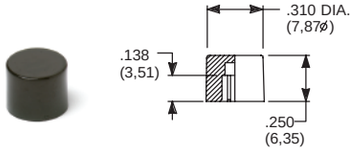

PART NO.
801802000 BLACK
801803000 RED

Material: Nylon
Finish: Gloss

Cap
Compatible with 13-19 actuators

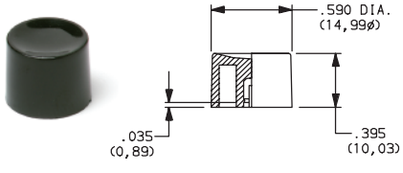

PART NO.
452D02000 BLACK
452D03000 RED

Material: Nylon
Finish: Gloss

Cap
Compatible with 13-19 actuators

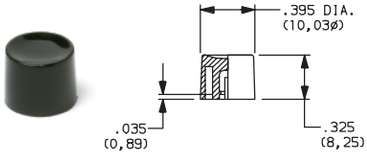

PART NO.
894102000 BLACK
894103000 RED

Material: Nylon
Finish: Gloss

Cap
Compatible with 13-19 actuators

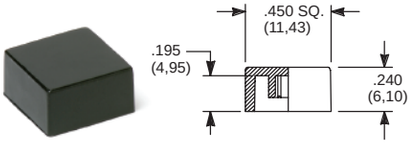

PART NO.
484602000 BLACK
484603000 RED

Material: Nylon
Finish: Gloss

PART NO.
798202263 BLACK
798203000 RED

Material: Nylon
Finish: Matte

Cap
Compatible with 01-05 actuators

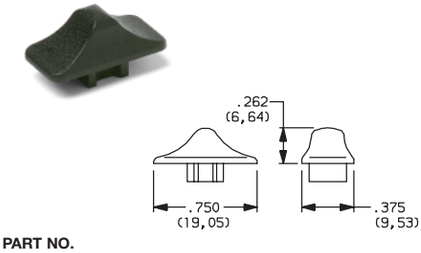

PART NO.
120100602 BLACK

Material: Nylon
Finish: Matte

Splash Cap

Fits 'MS' mounting style,
LXX1 & LXX2 models only.

PART NO.
120100200

Material: Nylon

Splash Cap

Fits 'MV' mounting style,
LX1X models only.

PART NO.
120100300

Material: Nylon

Splash Cap

Fits 'MA' mounting style,
LXX3 models only.

PART NO.
120100400

Material: Nylon

NOTE: Other colors available,
consult Customer Service Center.

Third Angle
Projection

Dimensions are shown: Inch (mm)
Specifications and dimensions subject to change

LP Series
Miniature Snap-in Slide Switches

Features/Benefits

- ***6 to 11 AMPS available***
- ***Easy assembly—Snap-in mounting***
- ***Contamination resistant—extended actuator***
- ***Positive detent***
- ***RoHS compliant***

Typical Applications

- ***Small appliances***
- ***Outdoor appliances***
- ***Portable tools***

Models Available

Specifications

CONTACT RATING: Q contact material (LP0X, LP2X Models: 6 AMPS @ 125 V AC or 28 V DC; 3 AMPS @ 250 V AC (UL/CSA). (LP7X, LP8X Models): 11 AMPS @ 125/250 V AC (UL/CSA). See page I-27 for additional ratings.

ELECTRICAL LIFE: 10,000 make-and-break cycles at full load.

INSULATION RESISTANCE: 10^9 Ω min.

DIELECTRIC STRENGTH: 1,000 Vrms min. @ sea level.

CONTACT RESISTANCE: Below 10 m Ω typ. initial @ 2-4 V DC, 100 mA, for both silver and gold plated contacts.

OPERATING TEMPERATURE: -30°C to +65°C

STORAGE TEMPERATURE: -30°C to +85°C

NOTE: Any models supplied with Q, B or G contact material are RoHS compliant.

NOTE: Specifications and materials listed above are for switches with standard options. For information on specific and custom switches, consult Customer Service Center.

Materials

HOUSING: 6/6 nylon (UL94V-2), black.

ACTUATOR: Glass filled acetal, UV and petroleum resistant, black.

CONTACTS: Q contact material: Copper, silver plated. See page I-27 for additional contact materials.

TERMINALS: Q contact material: Copper, silver plated. See page I-27 for additional contact materials.

CONTACT SPRING: Music wire or stainless steel.

TERMINAL SEAL: Epoxy.

Build-A-Switch

To order, simply select desired option from each category and place in the appropriate box. Available options are shown and described on pages I–26 and I–27. For additional options not shown in catalog, consult Customer Service Center.

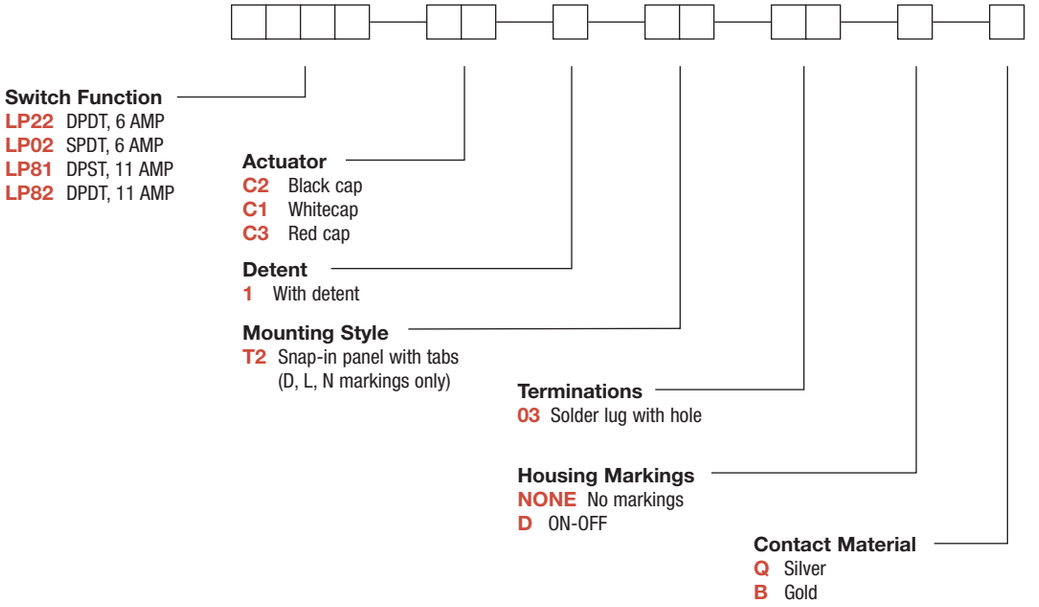

Third Angle Projection

Dimensions are shown: Inches (mm)
Specifications and dimensions subject to change

LP Series
Miniature Snap-in Slide Switches

SWITCH FUNCTION

NO. POLES	MODEL NO.	AMP RATING*	SWITCH FUNCTION	SCHEMATIC
SP	LP02	6	SPDT	1 2 3

NO. POLES	MODEL NO.	AMP RATING*	SWITCH FUNCTION	SCHEMATIC
DP	LP22	6	DPDT	1 2 3 / 4 5 6
	LP81	11	DPST	1 2 / 4 5
	LP82	11	DPDT	1 2 3 / 4 5 6

All models c UL us with all options when ordered with 'Q' contact material.

Contacts make on side actuator thrown.

* For complete contact ratings, see CONTACT MATERIALS Section, page I-27.

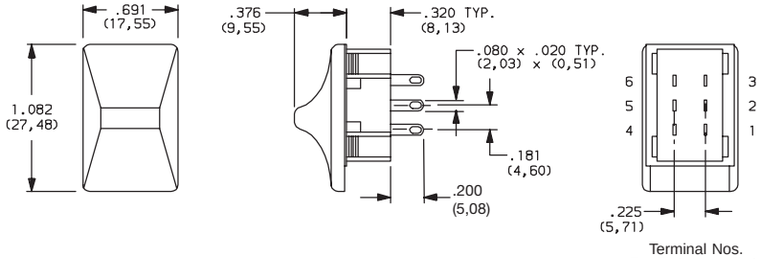

Part number shown: LP22C21S203Q

Terminal Nos.
For Reference Only

ACTUATOR

C1; C2; C3

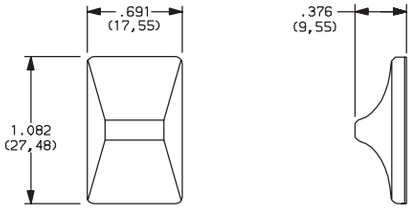

OPTION CODE2	ACTUATOR CAP COLOR
C2	BLACK
C1	WHITE
C3	RED

NOTE: Actuator finish: gloss. Other colors available, consult Customer Service Center.

DETENT

1 WITH DETENT

MOUNTING STYLE

T2 SNAP-IN PANEL WITH TABS

Mounting style T2 suitable for markings.
See HOUSING MARKINGS options.

PANEL THICKNESS	DIM 'A'
.030–.045 (0,76) (1,14)	.578 (14,68)
.046–.059 (1,17) (1,50)	.585 (14,86)
.060–.089 (1,52) (2,26)	.598 (15,19)
.090–.120 (2,29) (3,05)	.610 (15,49)

PANEL MOUNTING

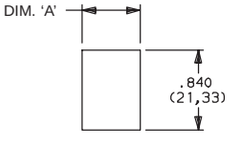

Third Angle Projection

Dimensions are shown: Inch (mm)
Specifications and dimensions subject to change

TERMINATIONS

03 SOLDER LUG WITH HOLE

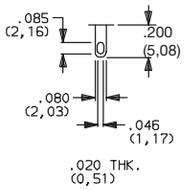

HOUSING MARKINGS

NONE NO MARKINGS

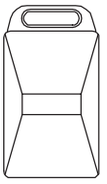

D ON-OFF

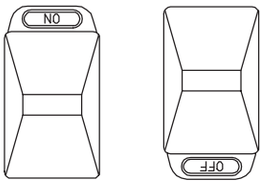

NOTE: Housing markings are available with 'T2' mounting style only. The marking color on all housings with marking options 'D' is white, standard. Other marking colors are available, consult Customer Service Center.

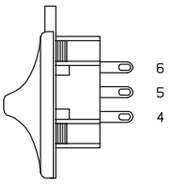

Orientation of actuator and terminals.

CONTACT MATERIAL

OPTION CODE	CONTACT MATERIAL	RATINGS	
Q	SILVER [2]	POWER	LP0X, LP2X MODELS: 6 AMPS @ 125 V AC or 28 V DC; 3 AMPS @ 250 V AC (UL/CSA). LP7X, LP8X MODELS: 11 AMPS @ 125/250 V AC (UL/CSA).
B	GOLD [1]	LOW LEVEL/DRY CIRCUIT	0.4 VA MAX. @20 V AC OR DC MAX.

* Note: See Technical Data section of this catalog for RoHS compliant and compatible definitions and specifications.

[1] CONTACTS & TERMINALS: Copper, with gold plate over nickel plate.
[2] CONTACTS & TERMINALS: Copper, silver plated (standard with all termination options).
[3] CONTACTS & TERMINALS: Copper, with gold plate over nickel plate over silver plate.

NOTE: Any models supplied with Q or B contact material are RoHS compliant.

All models c UL us with all when ordered with 'Q' contact material.

Third Angle Projection

Dimensions are shown: Inches (mm)
Specifications and dimensions subject to change

S Series
Slide Switches

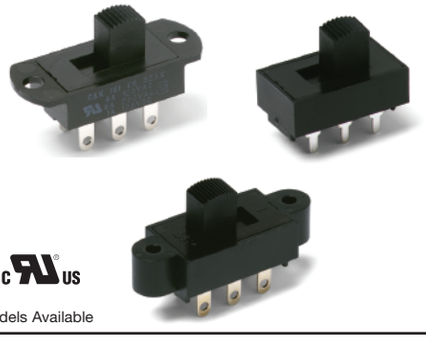

Models Available

Features/Benefits

- ***6 to 15 AMPS***
- ***Enclosed housing***
- ***PC and Snap-in panel mounting***
- ***Reversing option***
- ***RoHS compliant***

Typical Applications

- ***Portable tools***
- ***Small appliances***
- ***Floor care products***

Specifications

CONTACT RATING: Q contact material (S1XX, S2XX Models): 6 AMPS @ 125 V AC; 6 AMPS @ 250 V AC; 1 AMP @ 125 V DC. (S5XX, S6XX Models): 12 AMPS @ 125 V AC; 6 AMPS @ 250 V AC; 1 AMP @ 125 V DC. (S7XX, S8XX Models): 15 AMPS @ 125 V AC; 6AMPS @ 250 V AC. See page I-32 for additional ratings.

ELECTRICAL LIFE: 10,000 make-and-break cycles at full load.

CONTACT RESISTANCE: Below 10 m Ω typ. initial @ 2-4 V DC, 100 mA, for both silver and gold plated contacts.

INSULATION RESISTANCE: 10^9 Ω min.

DIELECTRIC STRENGTH: 1,000 Vrms min. @ sea level.

OPERATING TEMPERATURE: -30°C to +65°C

STORAGE TEMPERATURE: -30°C to +85°C

Materials

HOUSING: 6/6 nylon (UL94V-2), black.

TOP PLATE: 6/6 nylon (UL94V-2), black.

ACTUATOR: 6/6 nylon (UL94V-2), black (standard).

CONTACTS: Q contact material: Copper, silver plated. See page I-32 for additional contact materials.

TERMINALS: Q contact material: Copper, silver plated. See page I-32 for additional contact materials.

CONTACT SPRING: Music wire or stainless steel.

TERMINAL SEAL: Epoxy.

NOTE: Any models supplied with Q, B or G contact material are RoHS compliant.

NOTE: Specifications and materials listed above are for switches with standard options. For information on specific and custom switches, consult Customer Service Center.

Build-A-Switch

To order, simply select desired option from each category and place in the appropriate box. Available options are shown and described on pages I–29 through I–32. For additional options not shown in catalog, consult Customer Service Center.

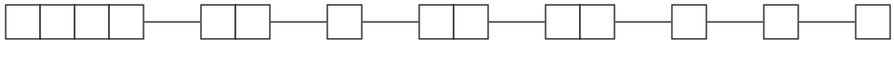

Switch Function
- **S101** SPST, 6 AMPS
- **S202** (DPDT, 6 AMPS
- **S802** DPDT, 15 AMPS
- **S102** SPDT, 6AMPS
- **S112** SPDT, mom., 6 AMPS
- **S201** DPST, 6 AMPS
- **S602** DPDT, 12 AMPS
- **S701** SPST, 15 AMPS
- **S702** SPDT, 15 AMPS

Actuator
- **03** .335" high
- **04** .500" high
- **09** .250" high
- **12** Screwdriver slot (with marking)
- **13** Screwdriver slot (without marking)
- **C2** Black cap
- **C3** Red cap
- **C5** Yellow cap

Detent
- **1** With detent
- **2** Without detent

Mounting Style
- **SS** Panel with mounting ears
- **MS** PC thru-hole
- **S2** Snap-in panel with blacktop plate
- **TS** Panel with mounting ears

Terminations
- **03** Solder lug with hole
- **02** PC Thru-hole
- **04** PC Thru-hole
- **07** Quick connect
- **08** PC Thru-hole
- **WC** Wire lead

Housing Markings
- **NONE** No markings
- **D** ON-OFF
- **L** ON
- **M** ON-OFF
- **N** Red rectangle on one end

Contact Material
- **Q** Silver
- **B** Gold
- **G** Gold over silver

Seal
- **NONE** No seal
- **E** Epoxy seal

Dimensions are shown: Inch (mm)
Specifications and dimensions subject to change

SWITCH FUNCTION

NO. POLES	MODEL NO.	AMP RATING	SWITCH FUNCTION	SCHEMATIC	AVAILABLE MOUNTING STYLES
SP	S101	6	SPST	1 2	SS
	S102	6	SPDT	1 2 3	MS,SS
	S112	6	SPDT-MOM.	1 2 3	MS,SS
	S701	15	SPST	1 2	S1,S2,S3,ST
	S702	15	SPDT	1 2 3	S1,S2,S3,ST

NO. POLES	MODEL NO.	AMP RATING	SWITCH FUNCTION	SCHEMATIC	AVAILABLE MOUNTING STYLES
DP	S201	6	DPST	1 2 / 4 5	MS,SS,TS
	S202	6	DPDT	1 2 3 / 4 5 6	MS,SS, TS
	S602	12	DPDT	1 2 3 / 4 5 6	MS,SS, TS
	S802	15	DPDT	1 2 3 / 4 5 6	S1,S2,S3,ST

SPST

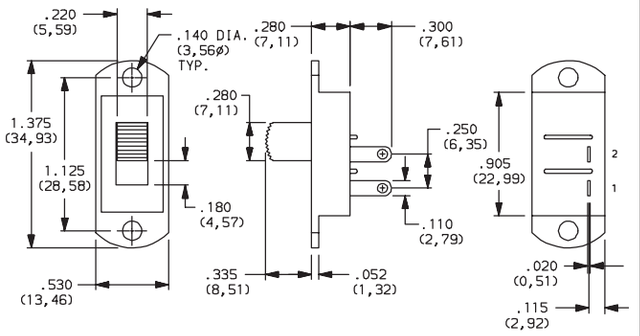

Part number shown: S101031SS03Q

TERM. NOS. FOR REFERENCE ONLY

DPDT

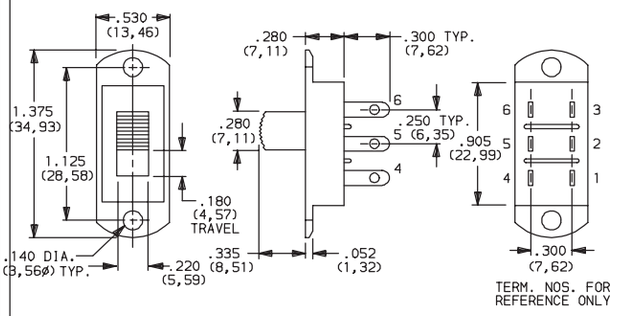

TERM. NOS. FOR REFERENCE ONLY

Part number shown: S202031SS03Q

NOTE: and MOM. in table indicates momentary action.

All models c UL us with all options when ordered with 'G' or 'Q' contact material.

Contacts make on side actuator thrown.

ACTUATOR

03 .335" HIGH

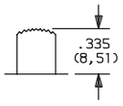

04 .500" HIGH

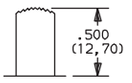

09 .250" HIGH

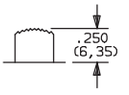

12 SCREWDRIVER SLOT (WITH MARKING)

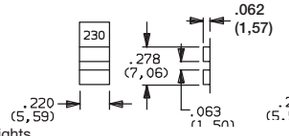

White 115-230 markings (std.).

13 SCREWDRIVER SLOT (WITHOUT MARKING)

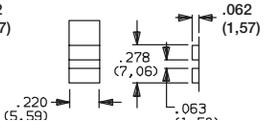

Without markings.

NOTE: Standard actuator color is black, other colors available, consult Customer Service Center. Alternate heights are available with '03, 04 and 09' actuators, consult Customer Service Center. Models with S2 mounting style, subtract .090 (2, 29). Actuators '12' and '13' are available with DPST and DPDT models only.

C2; C3; C5 SNAP-ON CAP

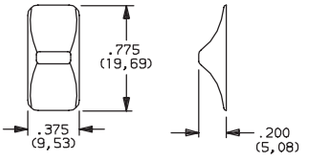

Available with S2 mounting style only.

OPTION CODE2	C1-CT CAP COLOR
C2	BLACK
C3	RED
C5	YELLOW

NOTE: Actuator finish: matte. If no color is specified, black will be supplied. Colored actuator caps may also be ordered separately and user installed, see page I-32.

Third Angle Projection

Dimensions are shown: Inches (mm)
Specifications and dimensions subject to change

S Series
Slide Switches

DETENT

1 WITH DETENT

Standard with all maintained models: S101, S102, S201, S202, S602, S701, S702, and S802.

2 WITH OUT DETENT

Standard with all momentary models: S112.

MOUNTING STYLE

SS PANEL WITH MOUNTING EARS

S202031SS03Q

DPDT

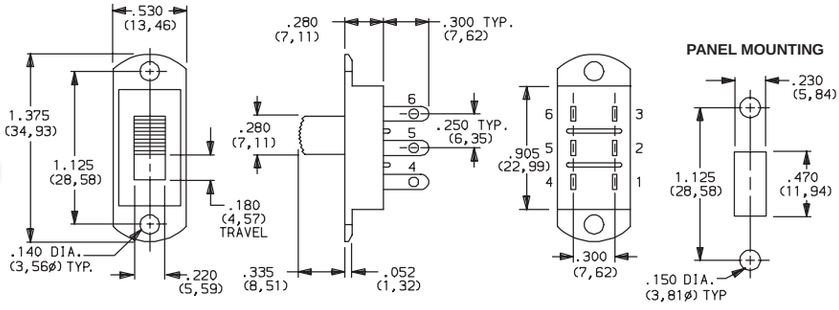

AVAILABLE WITH:

Models: S101, S102, S112, S201, S202 and S602
Terminations: All except 08
Actuators: 03, 04, 09, 12* and 13*.

*12 and 13 actuators not available with S1XX models.

MS PC THRU-HOLE

S202031MS02Q

DPDT

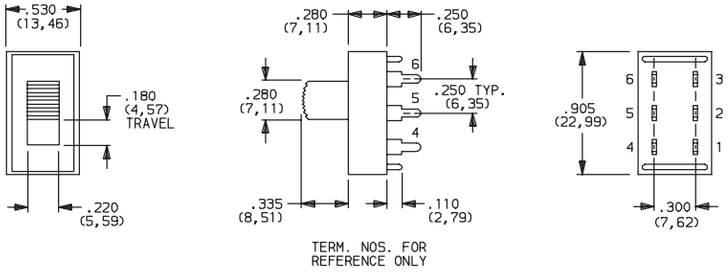

AVAILABLE WITH:

Models: S101, S102, S112, S201, S202, S602
Terminations: 02, 04 and 08
Actuators: 03, 04, 09, 12* and 13*

*12 and 13 actuators available with S201, S202 and S602 models only.

PC MOUNTING

For mounting information, see TERMINATIONS section, page I-31.

S2 SNAP-IN PANEL

S802C21S207Q

DPDT

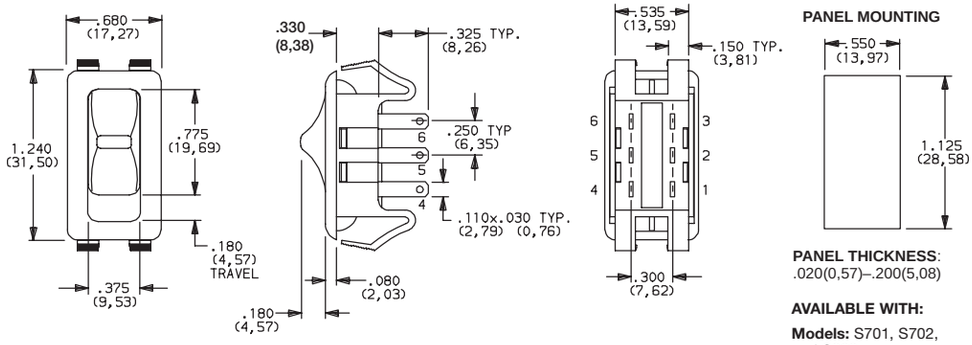

PANEL THICKNESS:
.020(0,57)–.200(5,08)

AVAILABLE WITH:

Models: S701, S702, and S802
Terminations: 04, 07, 57 and WC
Actuators: C2, C3, C5 and 03

Third Angle Projection

Dimensions are shown: Inch (mm)
Specifications and dimensions subject to change

MOUNTING STYLE

TS PANEL WITH MOUNTING EARS

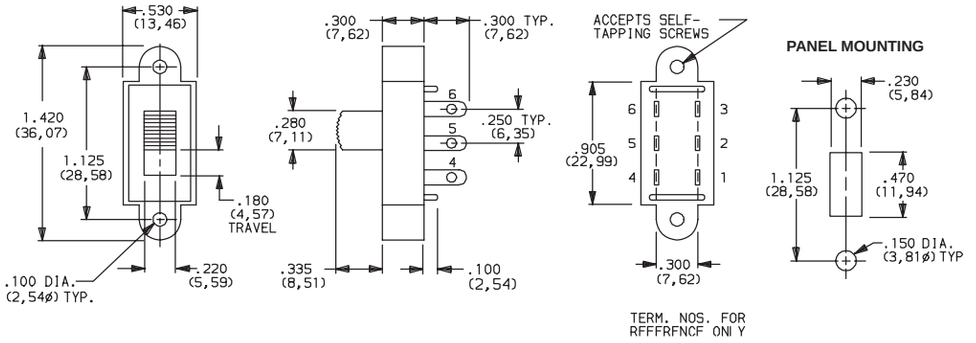

S202031TS03Q

DPDT

AVAILABLE WITH:

Models: S201, S202, and S602
Terminations: All
Actuators: 03, 04 and 12.

TERMINATIONS

03 SOLDER LUG WITH HOLE

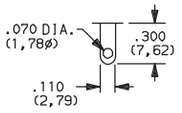

02 PC THRU-HOLE

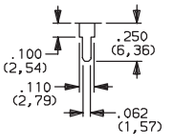

Recommended with 'MS' mounting style only.

04 PC THRU-HOLE

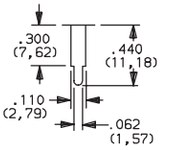

Recommended with double pole models only.

07 QUICK CONNECT

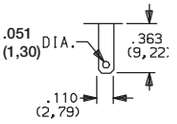

08 PC THRU-HOLE

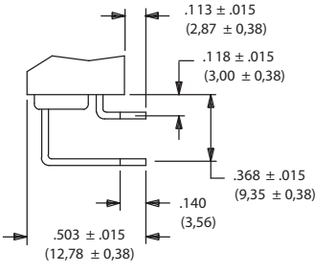

MS mounting style only.

WC WIRE LEAD

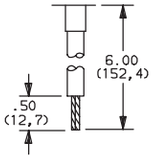

18 AWG wire for S1XX and S2XX models. 16 AWG wire for all other models. Black wire standard, other colors and lengths available, consult Customer Service Center. UL style 1015.

NOTE: All terminals on S1XX, S2XX and S6XX models are .020 (0,51) thick; all terminals on S7XX and S8XX models are .031 (0,79) thick.

PC MOUNTING

02 & 04 terminations

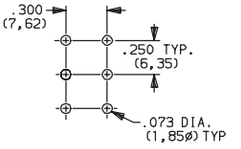

08 terminations
with MS mounting style.

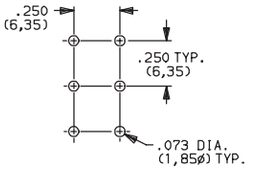

Third Angle Projection

Dimensions are shown: Inches (mm)
Specifications and dimensions subject to change

S Series
Slide Switches

TOP PLATE MARKINGS

NONE NO MARKINGS

D ON-OFF

L ON

M ON-OFF

N RED RECTANGLE ON ONE END

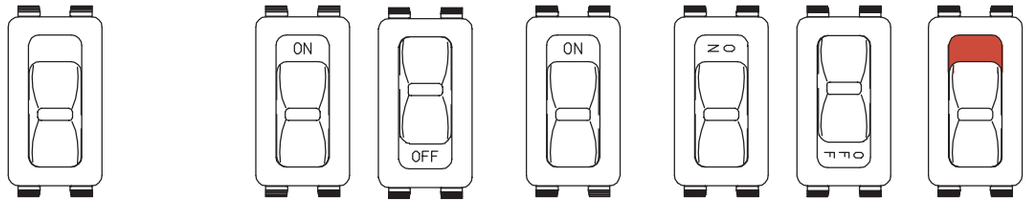

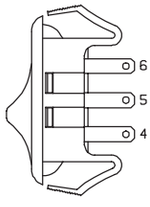

NOTE: Top plate markings are available with 'S2' mounting style only. The marking color on all top plates with marking options 'D, L and M' is white, standard. (except white top plates: marking color is black, standard). The marking color on all top plates with 'N' marking option is red, standard. Other marking colors are available, consult Customer Service Center.

Note: Orientation of actuator markings and terminals.

CONTACT MATERIAL

OPTION CODE	CONTACT MATERIAL	RATINGS	
Q	SILVER [2]	POWER	S1XX, S2XX MODELS: 6 AMPS @ 125 V AC; 6 AMPS @ 250 V AC; 1 AMP @ 125 V DC c UL us S6XX MODELS: 12 AMPS @ 125 V AC; 6 AMPS @ 250 V AC; 1 AMP @ 125 V DC c UL us S7XX, S8XX MODELS: 15 AMPS @ 125 V AC; 6 AMPS @ 250 V AC c UL us
B	GOLD [1]	LOW LEVEL/DRY CIRCUIT	0.4 VA MAX. @20 V AC OR DC max.
G	GOLD OVER SILVER [3]	LOW LEVEL/DRY CIRCUIT OR POWER	S1XX, S2XX MODELS: 0.4 VA MAX. @ 20 V AC OR DC MAX. OR 6 AMPS @ 125 V AC; 6 AMPS @ 250 V AC; 1 AMP @ 125 V DC c UL us S6XX MODELS: 0.4 VA MAX. @ 20 V AC OR DC MAX. OR 12 AMPS @ 125 V AC; 6 AMPS @ 250 V AC; 1 AMP @ 125 V DC c UL us S7XX, S8XX MODELS: 0.4 VA MAX. @ 20 V AC OR DC MAX. OR 15 AMPS @ 125 V AC; 6 AMPS @ 250 V AC c UL us

* Note: See Technical Data section of this catalog for RoHS compliant and compatible definitions and specifications.

[1] CONTACTS & TERMINALS: Copper, with gold plate over nickel plate.
[2] CONTACTS & TERMINALS: Copper, silver plated (standard with all termination options).
[3] CONTACTS & TERMINALS: Copper, with gold plate over nickel plate over silver plate.

NOTE: Any models supplied with Q, B or G contact material are RoHS compliant.
All models c UL us with all options when ordered with 'G' or 'Q' contact material.
NOTE: 'G' contact material is equivalent to both 'B' and 'Q' contact materials.

SEAL

NONE NO SEAL

E EPOXY SEAL

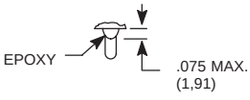

AVAILABLE HARDWARE

Cap, C2; C3 actuators

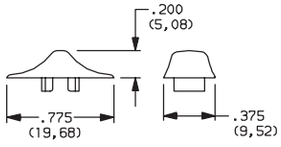

PART NO.

121160100 WHITE
121160200 BLACK
121160300 RED

Material: 6/6 Nylon
Finish: Matte

Cap, 03 actuator

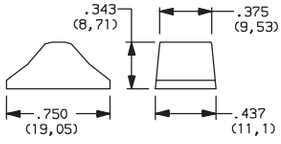

PART NO.

121000101 WHITE
121000102 BLACK
121000103 RED

Material: 6/6 Nylon
Finish: Gloss

NOTE: Other cap colors available, consult Customer Service Center.

Third Angle Projection

Dimensions are shown: Inch (mm)
Specifications and dimensions subject to change

V Series
Power & Line Voltage Select Slide Switches

Features/Benefits

- ***Ratings up to 10 AMPS***
- ***Snap-in panel and PC mounting***
- ***Actuators with screwdriver slot***
- ***Quick connect terminals available***
- ***RoHS compliant***

Typical Applications

- ***Appliances***

Specifications

CONTACT RATING: 10 GPA @ 125 V AC 50/60 Hz T85;
5 GPA @ 250 V AC 50/60 Hz T85;
2 (0.5)A @ 250 VAC 50/60 Hz T85;
4RA @ 30 VDC T85

ELECTRICAL LIFE: 10,000 make-and-break cycles at full load.

CONTACT RESISTANCE: Below 10 m Ω typ. initial @ 2-4 V DC, 100 mA.

INSULATION RESISTANCE: 10^9 Ω min.

DIELECTRIC STRENGTH: 1,000 Vrms min. @ sea level.

OPERATING TEMPERATURE: –30°C to +85°C.

Materials

HOUSING: 6/6 nylon (UL94V-2), black.

TOP PLATE: 6/6 nylon (UL94V-2), black.

ACTUATOR: Glass filled polyester (UL94V-0), '01 and 02' styles, black (standard); '12, 13 and 14' styles, red (standard).

CONTACTS: Copper, silver plated.

TERMINALS: Copper, silver plated.

CONTACT SPRING: Music wire or stainless steel.

TERMINAL SEAL: Epoxy.

NOTE: Any models supplied with Q, B or G contact material are RoHS compliant.

NOTE: Specifications and materials listed above are for switches with standard options. For information on specific and custom switches, consult Customer Service Center.

Build-A-Switch

To order, simply select desired option from each category and place in the appropriate box. Available options are shown and described on pages I–34 through I–36. For additional options not shown in catalog, consult Customer Service Center.

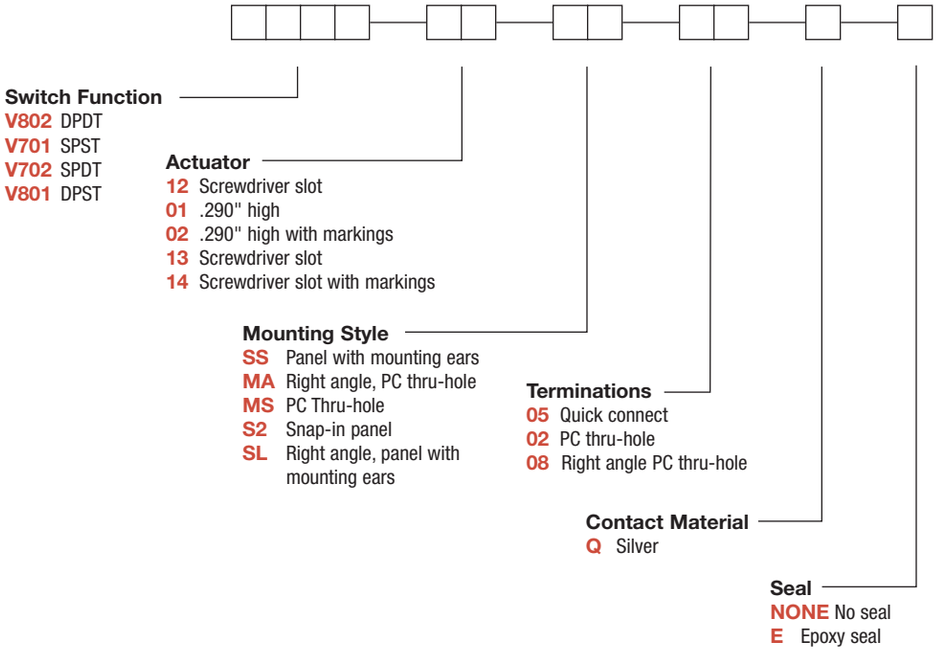

V Series
Power & Line Voltage Select Slide Switches

SWITCH FUNCTION

NO. POLES	MODEL NO.	SWITCH FUNCTION	SCHEMATIC	AVAILABLE MOUNTING STYLES
SP	V701	SPST	1A 1	ALL
	V702	SPDT	1A 1 1B	ALL

All models with all options.

Contacts make on side actuator thrown.

NO. POLES	MODEL NO.	SWITCH FUNCTION	SCHEMATIC	AVAILABLE MOUNTING STYLES
DP	V801	DPST	1A 1 2A 2	ALL
	V802	DPDT	1A 1 1B 2A 2 2B	ALL

ACTUATOR

12 SCREWDRIVER SLOT WITH MARKING

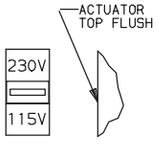

Actuator color is red with white 115V-230V markings (std.).

01 .290" HIGH

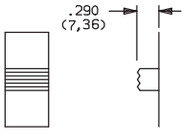

Actuator color is black.

02 .290" HIGH WITH MARKINGS

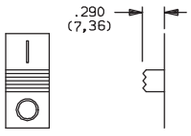

markings are reversed on V702 and V802 models. Actuator color is black with white markings (std.).

13 SCREWDRIVER SLOT NO MARKING

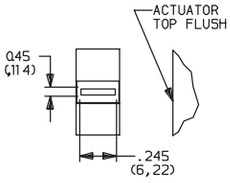

Actuator color is red.

14 SCREWDRIVER SLOT WITH MARKINGS

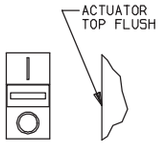

Markings are reversed on V702 and V802 models. Actuator color is red with white markings (std.).

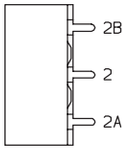

Note: Orientation of actuator markings and terminals.

MOUNTING STYLE

SS PANEL WITH MOUNTING EARS

V80212SS05Q
DPDT

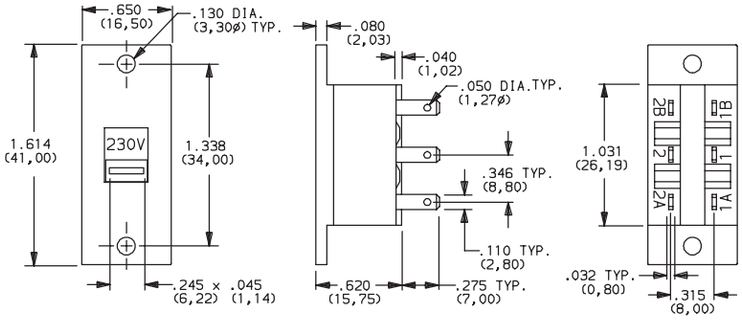

PANEL MOUNTING

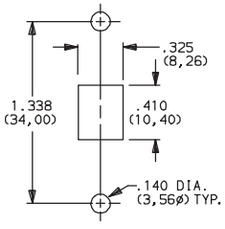

AVAILABLE WITH:

Models: All.
Terminations: 02 and 05

MA RIGHT ANGLE, PC THRU-HOLE

V80212MA08Q
Horizontal Actuation
DPDT

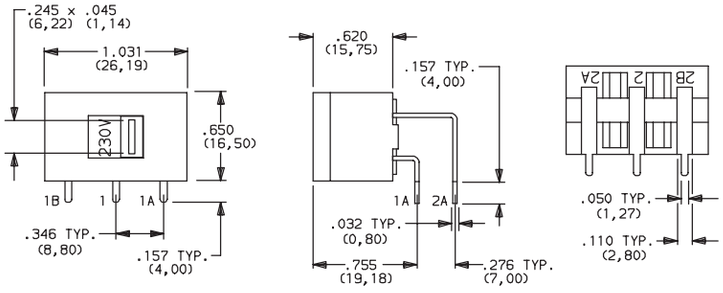

AVAILABLE WITH:

Models: All
Terminations: 08

PC MOUNTING

PC mount, side actuated.
For mounting information,
see TERMINATIONS section, page I-36.

Third Angle Projection

Dimensions are shown: Inch (mm)
Specifications and dimensions subject to change

MOUNTING STYLE

MS PC THRU-HOLE

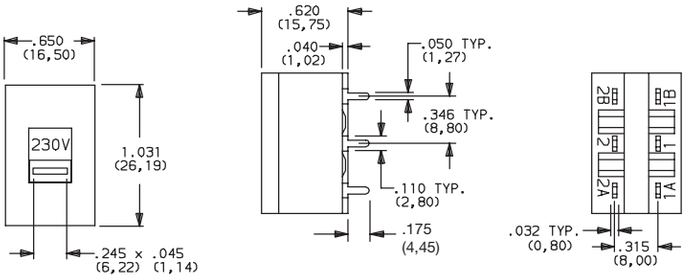

AVAILABLE WITH:

All models with 02 terminations

PC MOUNTING

PC mount, top actuated.
For mounting information,
see TERMINATIONS section, page I-36.

V80212MS02Q
DPDT

SL RIGHT ANGLE PANEL WITH MOUNTING EARS

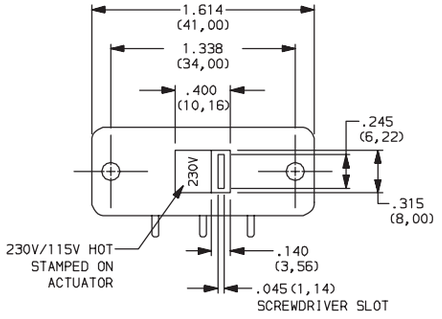

PANEL MOUNTING

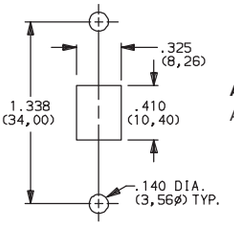

AVAILABLE WITH:

All models with 08 terminations

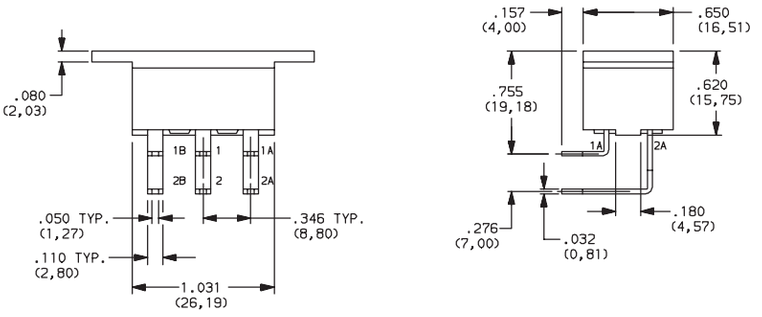

V80213SL08Q
Horizontal Actuation
DPDT

S2 SNAP-IN PANEL MOUNT

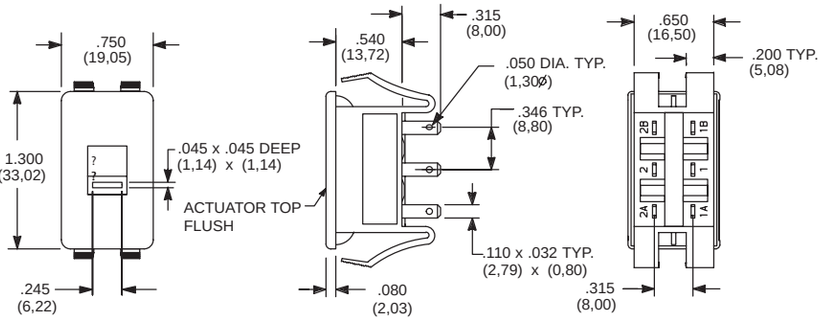

PANEL MOUNTING

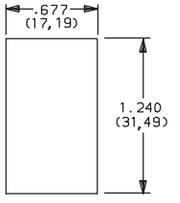

Panel thickness:
.020-.200 THK.
(0,50)(5,08)

AVAILABLE WITH:

All models with 02 &
05 terminations

V80212S205Q
DPDT

Third Angle
Projection

Dimensions are shown: Inches (mm)
Specifications and dimensions subject to change

V Series
Power & Line Voltage Select Slide Switches

TERMINATIONS

05 QUICK CONNECT

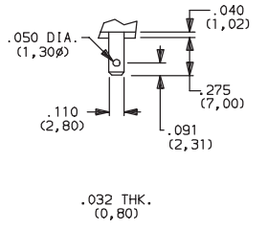

Fits .110 in. quick connector.

02 PC THRU-HOLE

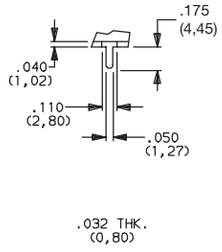

PC MOUNTING

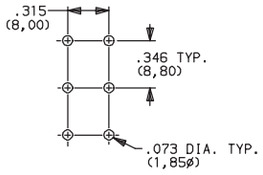

MS, SS Mounting Styles.

08 PC THRU-HOLE

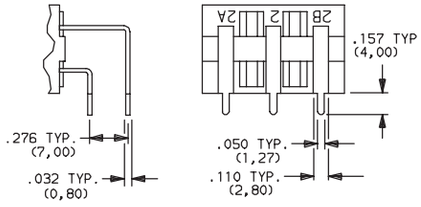

Not available with 'MS, SS or S2' mounting styles.

PC MOUNTING

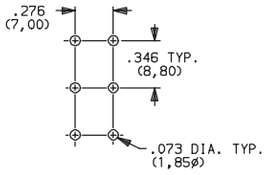

MA, SL Mounting Styles.

CONTACT MATERIAL

OPTION CODE	CONTACT MATERIAL	RATINGS	
Q	SILVER [1]	POWER	10 GPA @ 125 V AC 50/60 Hz T85; 5 GPA @ 250 V AC 50/60 Hz T85; 2 (0.5)A @ 250 VAC 50/60 Hz T85; 4RA @ 30 VDC T85

* Note: See Technical Data section of this catalog for RoHS compliant and compatible definitions and specifications.

[1] CONTACTS & TERMINALS: Copper, silver plated (standard with all termination options).

All models with all options.

NOTE: Any models supplied with Q contact material are RoHS compliant.

SEAL

NONE NO SEAL

E EPOXY SEAL

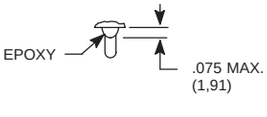

Third Angle Projection

Dimensions are shown: Inch (mm)
Specifications and dimensions subject to change

Features/Benefits

- ***Variety of actuators & terminations***
- ***PC and panel mounting***
- ***Shorting or non-shorting contacts***
- ***RoHS compliant***
- ***Halogen free material***

Typical Applications

- ***Test & measurement equipment***
- ***Computer peripherals & network products***
- ***Consumer products***

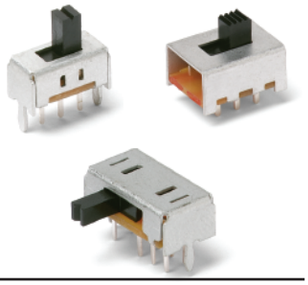

Specifications

CONTACT RATING: See individual parts.
MECHANICAL & ELECTRICAL LIFE: 10,000 cycles.
CONTACT RESISTANCE: 20 m Ω or less.
INSULATION RESISTANCE: 100 M Ω min. at 500 VDC.
DIELECTRIC STRENGTH: 500 VAC for 1 minute.
OPERATING TEMPERATURE: –30ºC to +70ºC.
PACKAGING: Bulk

* For RoHS compatible switches contact customer service.

Materials

BASE: Phenolic resin.
ACTUATOR: Standard: POM, Black.
High Temperature Option: PA46, Black.
HOUSING PLATE: Non-compatible; SPCC Sn plated.
Compatible; SPCC Ni plated.
MOVABLE CONTACT: Copper alloy, silver plated.
STATIONARY CONTACTS: Brass, silver plated.
TERMINALS: Brass, silver plated.
TERMINAL SEALED.

NOTE: Specifications and materials listed above are for switches with standard options. For information on specific and custom switches, consult Customer Service Center.

How To Order

Complete part numbers for OS Series Slide Switches are shown on pages I–37 through I–43.

PART NUMBER	RoHS Compliant	RoHS Compatible	SWITCH FUNCTION POS.1	SWITCH FUNCTION POS.2
OS102011MS2QN1 (non-shorting)	YES	NO	ON	ON
*OS102011MS2QN1C** (non-shorting)	YES	YES	ON	ON
OS102011MS2QS1 (shorting)	YES	NO	ON	ON
*OS102011MS2QS1C** (shorting)	YES	YES	ON	ON
CONN. TERMINALS			1-2	2-3
SCHEMATIC SPDT				

CONTACT RATING: 0.1A @ 12 VDC

* "C" option at the end of part number designates high temperature actuators

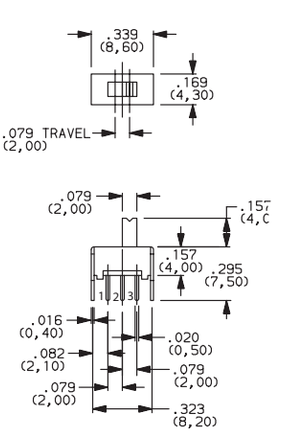

Actuator shown in pos. 2

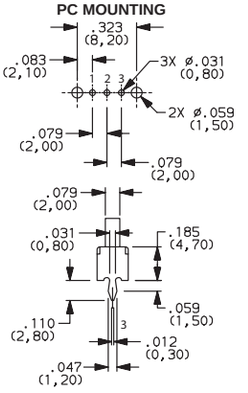

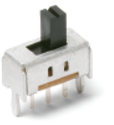

OS102011MS2QN1
SPDT

PART NUMBER	RoHS Compliant	RoHS Compatible	SWITCH FUNCTION POS.1	SWITCH FUNCTION POS.2	SWITCH FUNCTION POS.3
OS103011MS8QP1 (Non-specified)	YES	NO	ON	ON	ON
*OS103011MS8QP1C** (Non-specified)	YES	YES	ON	ON	ON
CONN. TERMINALS			1-2	2-3	2-4
SCHEMATIC SP3T					

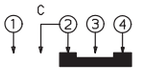

CONTACT RATING: 0.1A @ 12 VDC

* "C" option at the end of part number designates high temperature actuators

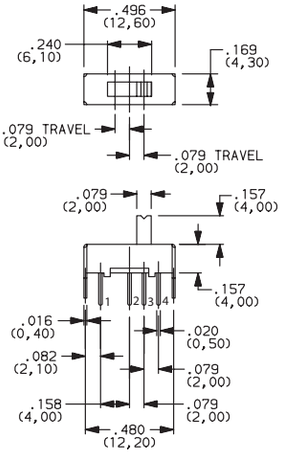

Actuator shown in pos. 3

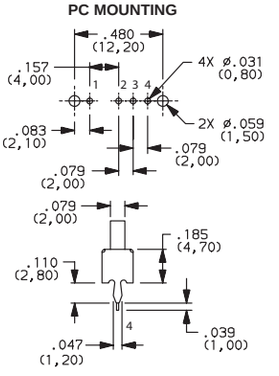

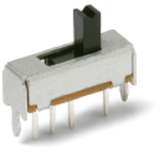

OS103011MS8QP1
SP3T

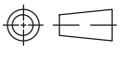

Third Angle Projection

Dimensions are shown: Inches (mm)
Specifications and dimensions subject to change

OS Series
Miniature Slide Switches

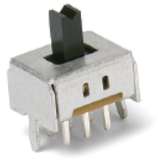

OS202011MS2QS1
DPDT

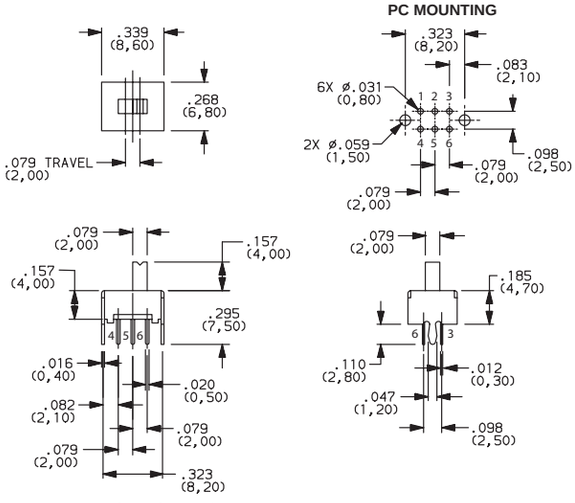

Actuator shown in pos. 2

PART NUMBER	RoHS Compliant	RoHS Compatible	SWITCH FUNCTION POS.1	SWITCH FUNCTION POS.2
OS202011MS2QS1 (Shorting)	YES	NO	ON	ON
OS202011MS2QN1 (Non-shorting)	YES	NO	ON	ON
CONN. TERMINALS			1-2, 4-5	2-3, 5-6

SCHEMATIC

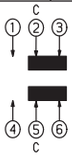

DPDT

CONTACT RATING: 0.1A @ 12 VDC

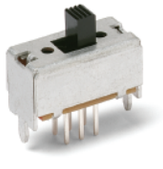

OS203011MS1QP1
DP3T

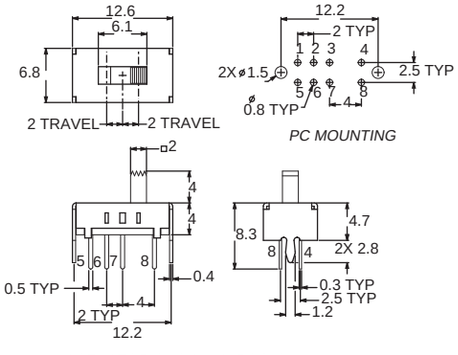

ACTUATOR SHOWN IN POS. 3

PART NUMBER	ROHS Compliant	ROHS Compatible	SWITCH FUNCTION POS.1	SWITCH FUNCTION POS.2	SWITCH FUNCTION POS.3
OS203011MS1QP1 (Non-specified)	YES	NO	ON	ON	ON
CONN. TERMINALS			1-3, 5-7	2-3, 6-7	3-4, 7-8

SCHEMATIC

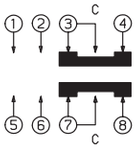

DP3T

CONTACT RATING: 0.3A @ 30 VDC

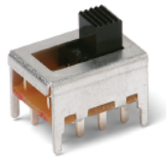

OS202013MT5QN1
DPDT

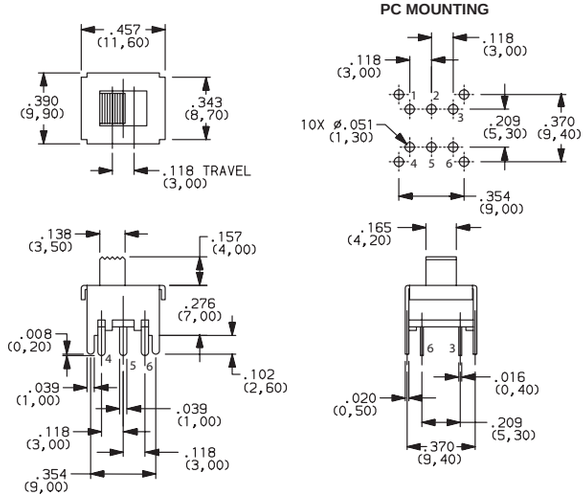

Actuator shown in pos. 1

PART NUMBER	RoHS Compliant	RoHS Compatible	SWITCH FUNCTION POS.1	SWITCH FUNCTION POS.2
OS202013MT5QN1 (Non-shorting)	YES	NO	ON	ON
CONN. TERMINALS			1-2, 4-5	2-3, 5-6

SCHEMATIC

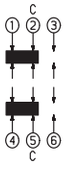

DPDT

CONTACT RATING: 0.3A @ 30 VDC

Third Angle Projection

Dimensions are shown: Inch (mm)
Specifications and dimensions subject to change

PART NUMBER	ROHS Compliant	ROHS Compatible	SWITCH FUNCTION POS.1	POS.2	POS.3
OS203013MT7QN1 (Non-shorting)	YES	NO	ON	OFF	ON
CONN. TERMINALS			1-2, 4-5		2-3, 5-6

SCHEMATIC

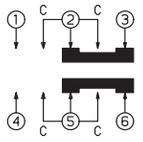

DP3T

CONTACT RATING: 0.3A @ 30 VDC

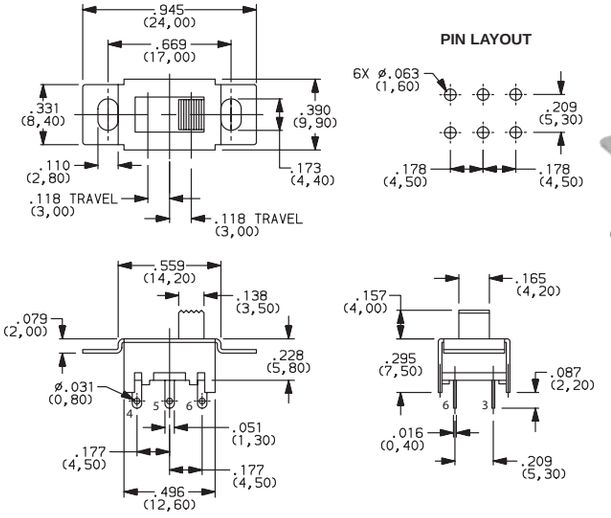

Actuator shown in pos. 3

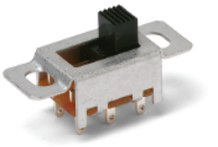

OS203013MT7QN1

DP3T

PART NUMBER	RoHS Compliant	RoHS Compatible	SWITCH FUNCTION POS.1	POS.2
OS202013MT8QN1 (Non-shorting)	YES	NO	ON	ON
CONN. TERMINALS			1-2, 4-5	2-3, 5-6

SCHEMATIC

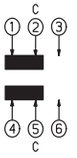

DPDT

CONTACT RATING: 0.3A @ 30 VDC

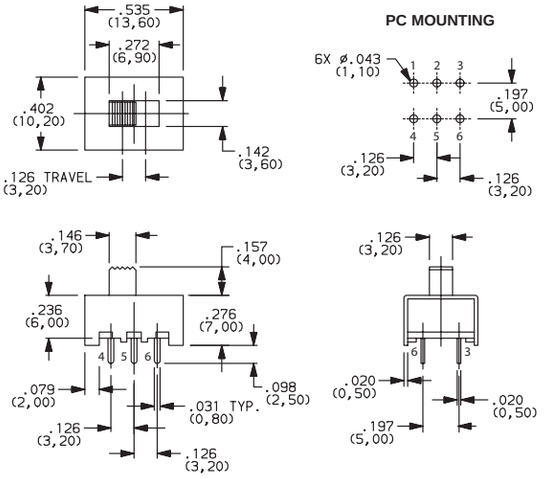

Actuator shown in pos. 1

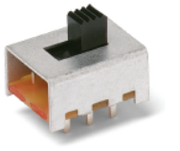

OS202013MT8QN1

DPDT

PART NUMBER	ROHS Compliant	ROHS Compatible	SWITCH FUNCTION POS.1	POS.2	POS.3
OS203013MT8QN1 (Non-shorting)	YES	NO	ON	ON	ON
CONN. TERMINALS			1-2, 5-6	2-3, 6-7	3-4, 7-8

SCHEMATIC

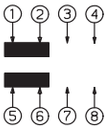

DP3T

CONTACT RATING: 0.3A @ 30 VDC

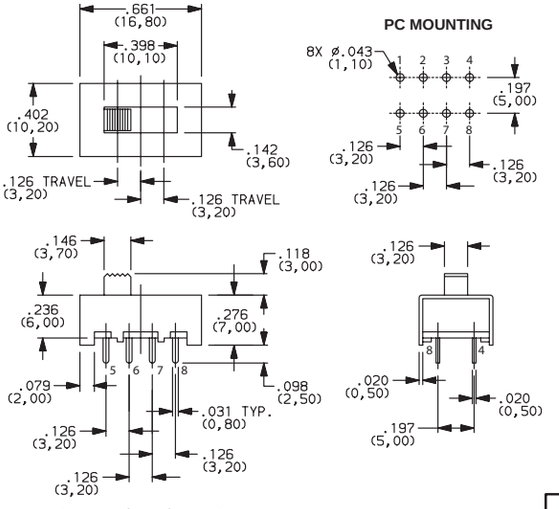

Actuator shown in pos. 1

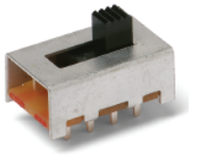

OS203013MT8QN1

DP3T

Third Angle Projection

Dimensions are shown: Inches (mm)
Specifications and dimensions subject to change

OS Series
Miniature Slide Switches

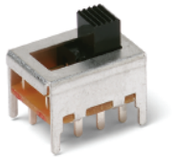

OS203013MT6QN1
DP3T

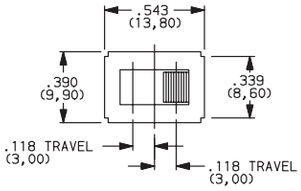

PC MOUNTING

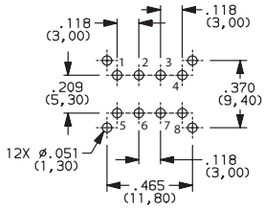

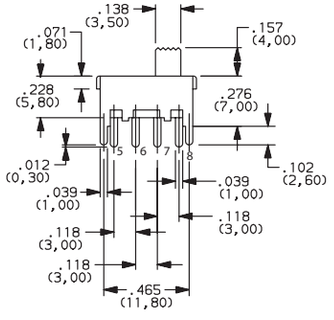

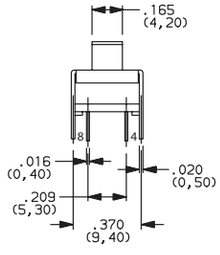

Actuator shown in pos. 3

PART NUMBER	ROHS Compliant	ROHS Compatible	SWITCH FUNCTION POS.1	POS.2	POS.3
OS203013MT6QN1 (Non-shorting)	YES	NO	ON	ON	ON
CONN. TERMINALS			1-2, 5-6	2-3, 6-7	3-4, 7-8

SCHEMATIC

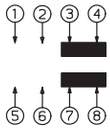

DP3T

CONTACT RATING: 0.2A @ 30 VDC

OS103012MU1QP1
SP3T

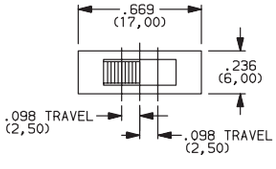

PC MOUNTING

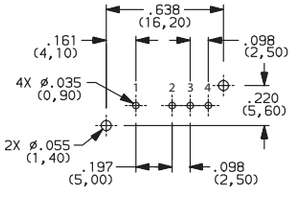

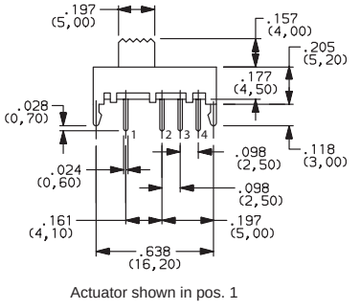

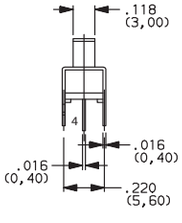

Actuator shown in pos. 1

PART NUMBER	ROHS Compliant	ROHS Compatible	SWITCH FUNCTION POS.1	POS.2	POS.3
OS103012MU1QP1 (Non-shorting)	YES	NO	ON	ON	ON
CONN. TERMINALS			1-2	2-3	2-4

SCHEMATIC

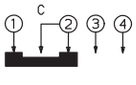

SP3T

CONTACT RATING: 0.2A @ 30 VDC

OS103012MU2QP1
SP3T

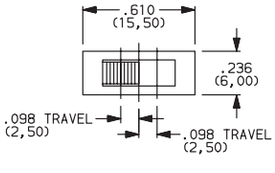

PC MOUNTING

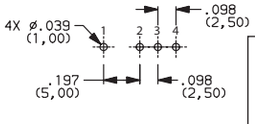

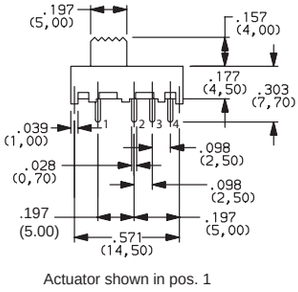

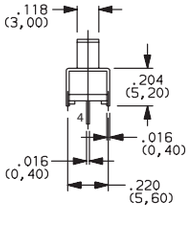

Actuator shown in pos. 1

PART NUMBER	ROHS Compliant	ROHS Compatible	SWITCH FUNCTION POS.1	POS.2	POS.3
OS103012MU2QP1 (Non-shorting)	YES	NO	ON	ON	ON
CONN. TERMINALS			1-2	2-3	2-4

SCHEMATIC

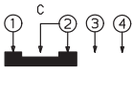

SP3T

CONTACT RATING: 0.2A @ 30 VDC

Third Angle Projection

Dimensions are shown: Inch (mm)
Specifications and dimensions subject to change

PART NUMBER	ROHS Compliant	ROHS Compatible	SWITCH FUNCTION POS.1	POS.2	POS.3
OS203012MU5QP1 (Non-specified)	YES	NO	ON	ON	ON
CONN. TERMINALS			1-2, 5-6	2-3, 6-7	2-4, 6-8

SCHEMATIC

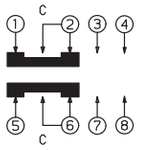

DP3T

CONTACT RATING: 0.1A @ 30 VDC

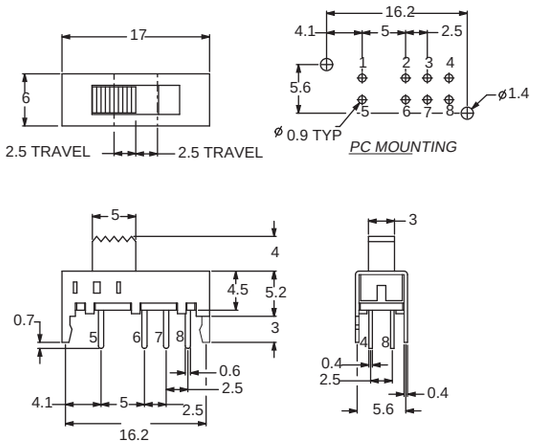

ACTUATOR SHOWN IN POS. 1

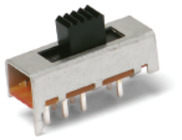

OS203012MU5QP1

DP3T

PART NUMBER	RoHS Compliant	RoHS Compatible	SWITCH FUNCTION POS.1	POS.2
OS202011MV4QN1 (Non-shorting)	YES	NO	ON	ON
OS202011MV4QS1 (Shorting)	YES	NO	ON	ON
CONN. TERMINALS			1-2, 4-5	2-3, 5-6

SCHEMATIC

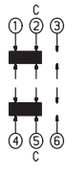

DPDT

CONTACT RATING: 0.1A @ 30 VDC

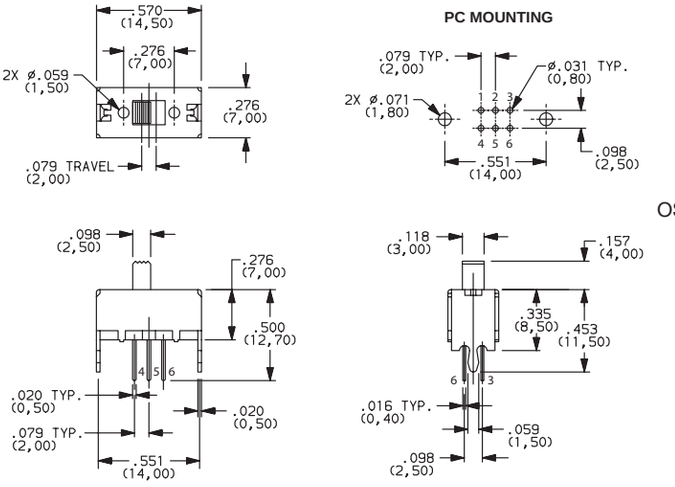

Actuator shown in pos. 1

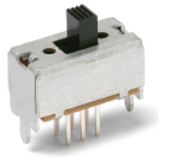

OS202011MV4QN1

DPDT

PART NUMBER	ROHS Compliant	ROHS Compatible	SWITCH FUNCTION POS.1	POS.2	POS.3
OS203011MV9QS1 (Shorting)	YES	NO	ON	ON	ON
OS203011MV9QN1 (Non-Shorting)	YES	NO	ON	ON	ON
CONN. TERMINALS			1-2-5 6-7-10	1-3-5 6-8-10	1-4-5 6-9-10

SCHEMATIC

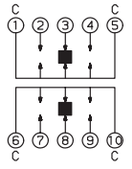

DP3T

CONTACT RATING: 0.1A @ 30 VDC

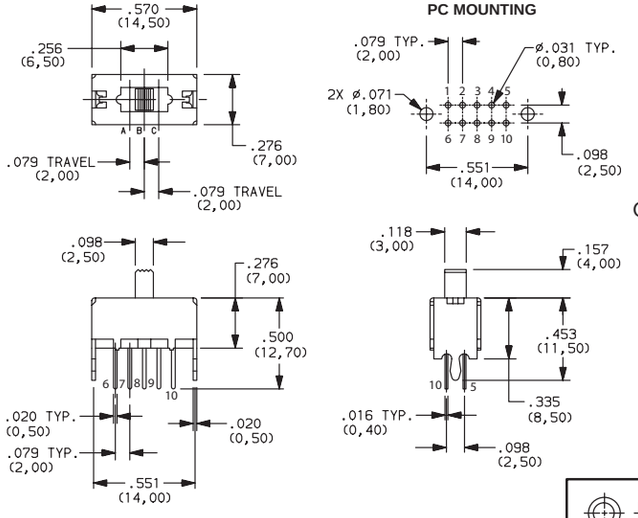

Actuator shown in pos. 2(A)

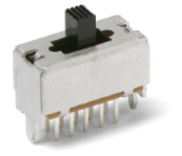

OS203011MV9QS1

DP3T

Third Angle Projection

Dimensions are shown: Inches (mm)
Specifications and dimensions subject to change

OS Series
Miniature Slide Switches

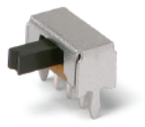

OS102011MA1QN1
SPDT

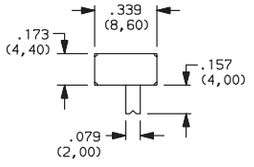

PC MOUNTING

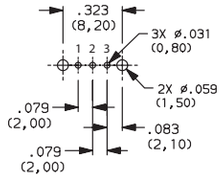

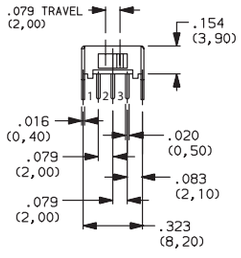

Actuator shown in pos. 2

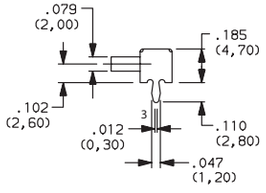

PART NUMBER	RoHS Compliant	RoHS Compatible	SWITCH FUNCTION POS.1	SWITCH FUNCTION POS.2
OS102011MA1QN1 (Non-shorting)	YES	NO	ON	ON
OS102011MA1QN1C* (Non-shorting)	YES	YES	ON	ON
OS102011MA1QS1 (Shorting)	YES	NO	ON	ON
OS102011MA1QS1C* (Shorting)	YES	YES	ON	ON
CONN. TERMINALS			1-2	2-3

SCHEMATIC

SPDT

CONTACT RATING: 0.1A @ 12 VDC

* "C" option at the end of part number designates high temperature actuators

OS103011MA7QP1
SP3T

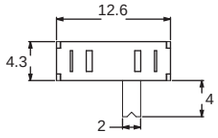

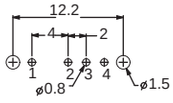

PC MOUNTING

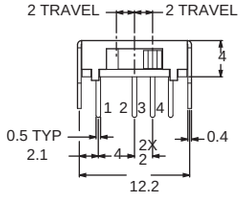

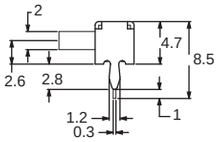

PART NUMBER	ROHS Compliant	ROHS Compatible	SWITCH FUNCTION POS.1	SWITCH FUNCTION POS.2	SWITCH FUNCTION POS.3
OS103011MA7QP1 (Non-specified)	YES	NO	ON	ON	ON
OS103011MA7QP1C* (Non-specified)	YES	YES	ON	ON	ON
CONN. TERMINALS			1-2	2-3	2-4

SCHEMATIC

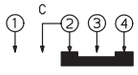

SP3T

CONTACT RATING: 0.1A @ 12 VDC

* "C" option at the end of part number designates high temperature actuators

OS203011MA2QP1
DP3T

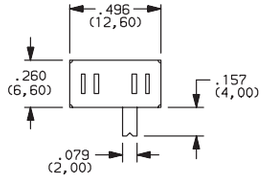

PC MOUNTING

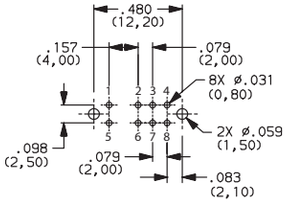

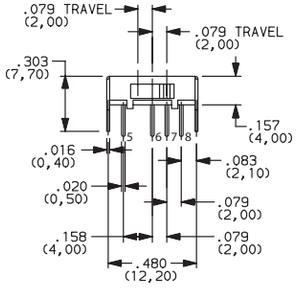

Actuator shown in pos. 3

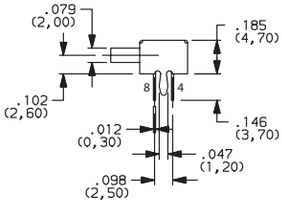

PART NUMBER	ROHS Compliant	ROHS Compatible	SWITCH FUNCTION POS.1	SWITCH FUNCTION POS.2	SWITCH FUNCTION POS.3
OS203011MA2QP1 (Non-specified)	YES	NO	ON	ON	ON
CONN. TERMINALS			1-2, 5-6	2-3, 6-7	2-4, 6-8

SCHEMATIC

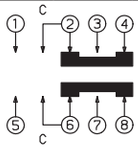

DP3T

CONTACT RATING: 0.1A @ 12 VDC

Third Angle Projection

Dimensions are shown: Inch (mm)
Specifications and dimensions subject to change

PART NUMBER	RoHS Compliant	RoHS Compatible	SWITCH FUNCTION POS.1	SWITCH FUNCTION POS.2
OS202011MA0QN1 (Non-shorting)	YES	NO	ON	ON
OS202011MA0QS1 (Shorting)	YES	NO	ON	ON
CONN. TERMINALS			1-2, 4-5	2-3, 5-6

SCHEMATIC

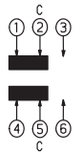

DPDT

CONTACT RATING: 0.1A @ 12 VDC

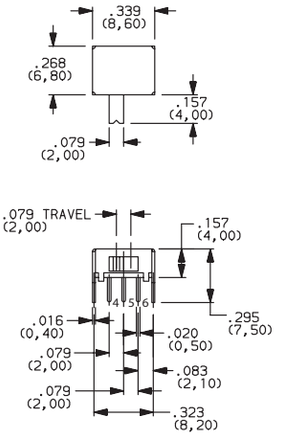

Actuator shown in pos. 1

PC MOUNTING

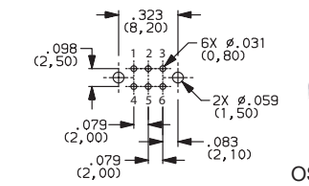

OS202011MA0QN1
DPDT

Third Angle Projection

Dimensions are shown: Inches (mm)
Specifications and dimensions subject to change

PCM Series
Ultraminiature Surface Mount Slide Switches

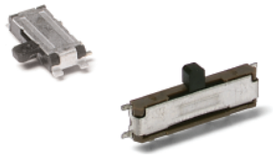

Features/Benefits

- ***Ultraminiature surface mount***
- ***Low profile***
- ***SPDT & SP3T models***
- ***RoHS compliant***

Typical Applications

- ***Computer peripherals & network products***
- ***Telecommunication products***
- ***Test & measurement equipment***

Specifications

CONTACT RATING: 0.3A @ 6 VDC.
MECHANICAL LIFE: 10,000 cycles.
CONTACT RESISTANCE: 70 m Ω max.
INSULATION RESISTANCE: 100 M Ω min. @ 500V.
DIELECTRIC STRENGTH: 500 VAC min.
OPERATING TEMPERATURE: –20°C to +85°C.
SOLDERABILITY: 255C max. solder temperature.
PACKAGING: Tape & reel.

Materials

CASE: PA6T
COVER: Stainless steel.
SLIDER: Nylon 4/6
BRUSH: Copper alloy silver clad.
TERMINALS: Copper alloy, silver plated.

NOTE: All models RoHS compliant and compatible with all options.

NOTE: Specifications and materials listed above are for switches with standard options. For information on specific and custom switches, consult Customer Service Center.

How To Order

Complete part numbers for PCM Series Ultraminiature Surface Mount Slide Switches are shown below and on page I–45.

PC MOUNTING

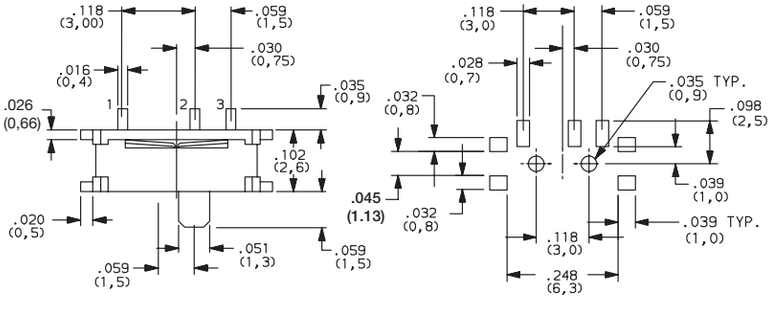

PCM12SMTR
SPDT

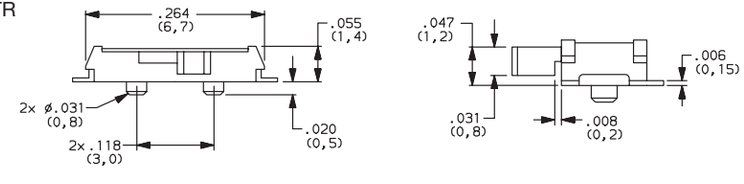

Actuator shown in pos. 2

PART NUMBER	SWITCH FUNCTION POS. 1	SWITCH FUNCTION POS. 2
PCM12SMTR	ON	ON
CONN. TERMINALS	1-2	2-3
SCHEMATIC SPDT	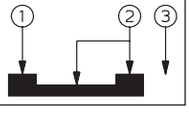	

TAPE & REEL

For part number PCM12SMTR

Quanity per reel 3500

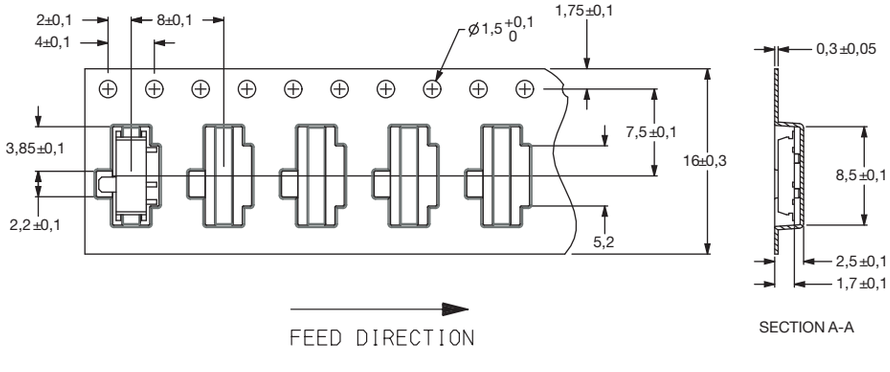

Dimensions are shown: Inch (mm)
Specifications and dimensions subject to change

PART NUMBER	SWITCH FUNCTION POS. 1	POS. 2	POS. 3
PCM13SMTR	ON	ON	ON
CONN. TERMINALS	1-3	2-3	3-4
SCHEMATIC SP3T	1 2 3 4		

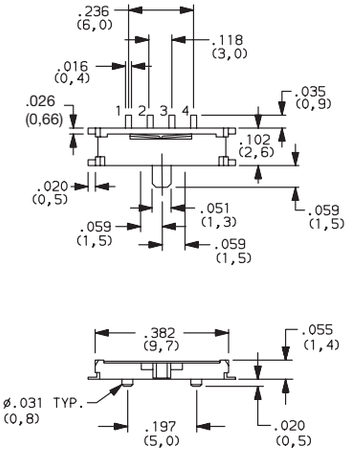

Actuator shown in pos. 2

PC MOUNTING

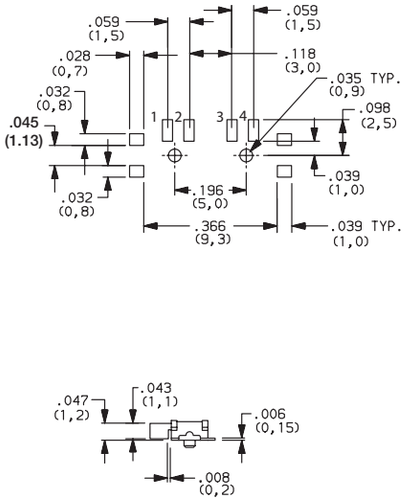

PCM13SMTR
SP3T

TAPE & REEL

For part number PCM13SMTR

Quanity per reel 3500

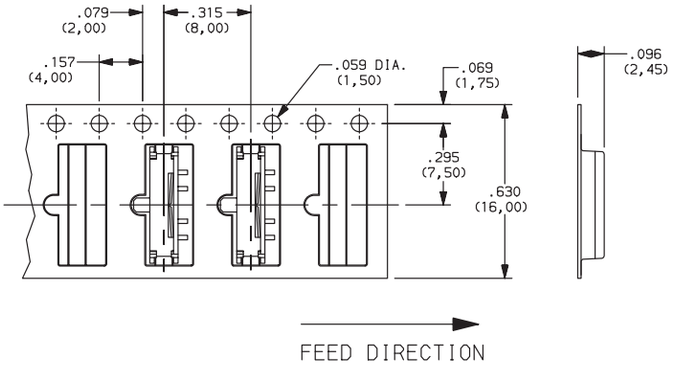

Third Angle Projection

Dimensions are shown: Inches (mm)
Specifications and dimensions subject to change

AYZ Series
Miniature Slide Switches

Features/Benefits

- *Low profile*
- *Single & double pole models*
- *Double & triple throw models*
- *RoHS compatible*

Typical Applications

- *Computer peripherals & network products*
- *Telecommunication products*
- *Test & measurement equipment*

Specifications

MAX. SWITCHING POWER: 1.2 VA
MAX. SWITCHING VOLTAGE: 12 VDC
MAX. SWITCHING CURRENT: 100 mA
MECHANICAL LIFE: 10,000 operations.
CONTACT RESISTANCE: <80m Ω
INSULATION RESISTANCE: >10 $^{8}\Omega$
DIELECTRIC STRENGTH: 0.1 kV at 50 Hz/1 min.
OPERATING TEMPERATURE: –10ºC to +60ºC
PACKAGING: Tape & reel, see page I-47.

Materials

HOUSING: Glass filled nylon 4/6 (UL 94V-0).
ACTUATOR: Glass filled nylon 6/6 (UL 94V-0), except options ending in C which are glass filled nylon 4/6 (UL94V-0).
COVER: Nickel silver.
MOVABLE CONTACT: Copper alloy, silver plated.
FIXED CONTACT: Brass, silver plated.
CONTACT SPRING: Contact bronze.

NOTE: Specifications and materials listed above are for switches with standard options. For information on specific and custom switches, consult Customer Service Center.

How To Order

Complete part numbers for AYZ Series Miniature Slide Switches are shown on pages I-46 through I-48.

PC MOUNTING

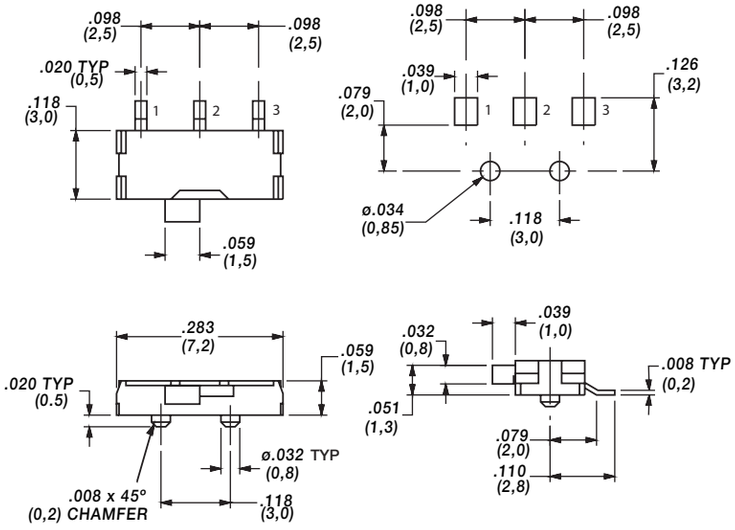

SWITCH SHOWN IN POSITION 1

PART NUMBER	RoHS Compliant	RoHS Compatible	SWITCH FUNCTION POS.1	SWITCH FUNCTION POS.2
AYZ0102AGRLC	YES	YES	ON	ON
CONN. TERMINALS			1-2	2-3
SCHEMATIC				

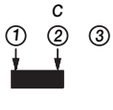

SPDT

Third Angle Projection

Dimensions are shown: Inch (mm)
Specifications and dimensions subject to change

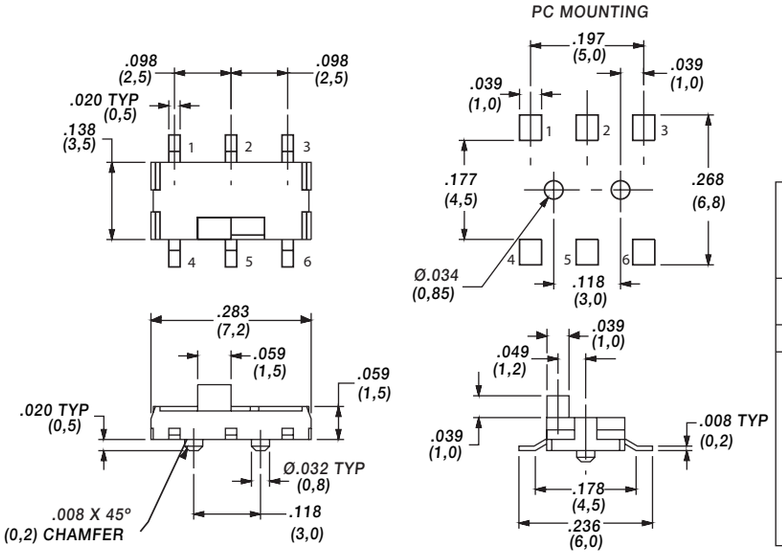

SWITCH SHOWN IN POSITION 1

PART NUMBER	RoHS Compliant	RoHS Compatible	SWITCH FUNCTION POS.1	SWITCH FUNCTION POS.2
AYZ0202AGRLC	YES	YES	ON	ON
CONN. TERMINALS			1-2,4-5	2-3,5-6
SCHEMATIC				
DPDT				

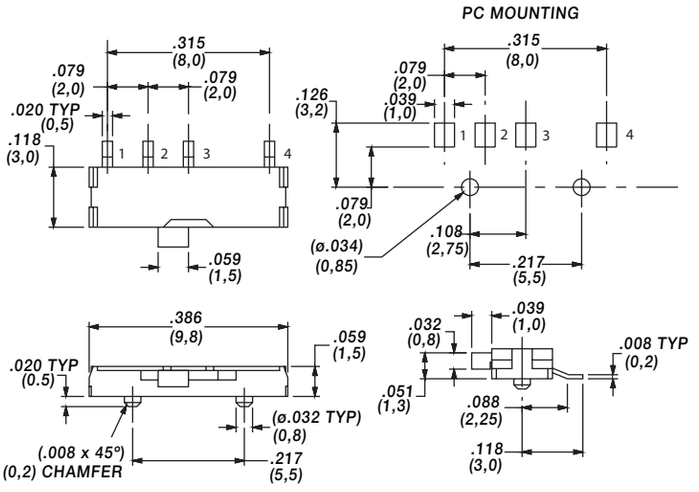

SWITCH SHOWN IN POSITION 1

PART NUMBER	ROHS Compliant	ROHS Compatible	SWITCH FUNCTION POS.1	SWITCH FUNCTION POS.2	SWITCH FUNCTION POS.3
AYZ0103AGRLC	YES	YES	ON	ON	ON
CONN. TERMINALS			1-3	2-C	3-4
SCHEMATIC					
SP3T					

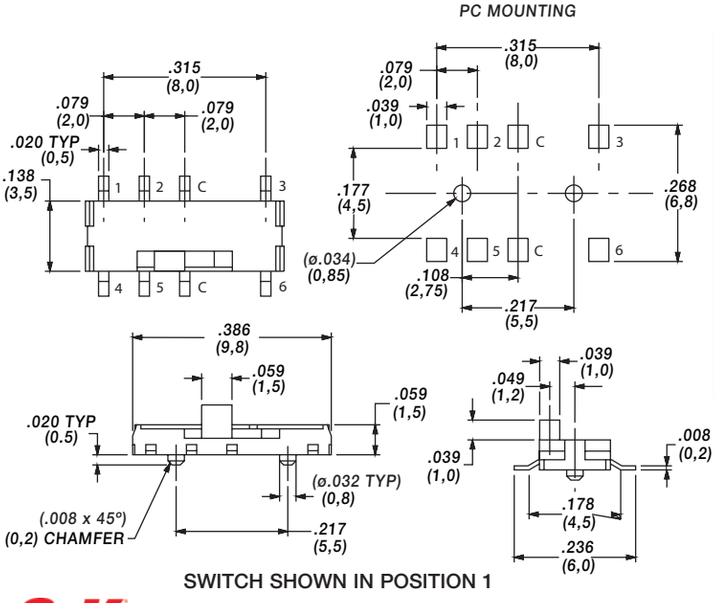

SWITCH SHOWN IN POSITION 1

PART NUMBER	ROHS Compliant	ROHS Compatible	SWITCH FUNCTION POS.1	SWITCH FUNCTION POS.2	SWITCH FUNCTION POS.3
AYZ0203AGRLC	YES	YES	ON	ON	ON
CONN. TERMINALS			1-C,4-C	2-C,5-C	3-C,6-C
SCHEMATIC					
DP3T					

Third Angle Projection

Dimensions are shown: Inches (mm)
Specifications and dimensions subject to change

TAPE & REEL

For part number AYZ0102AGRLC

Quantity per reel 4000

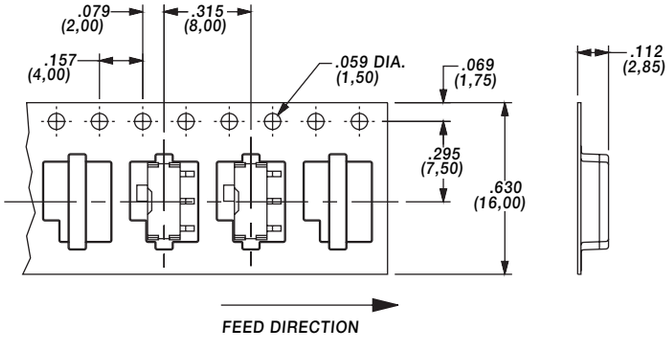

For part number AYZ0103AGRLC

Quantity per reel 4000

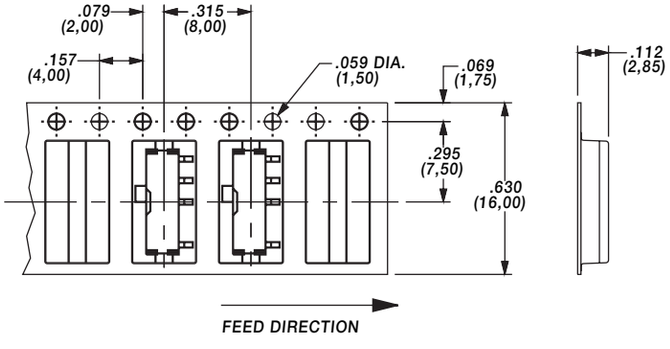

For part number AYZ0202AGRLC

Quantity per reel 3000

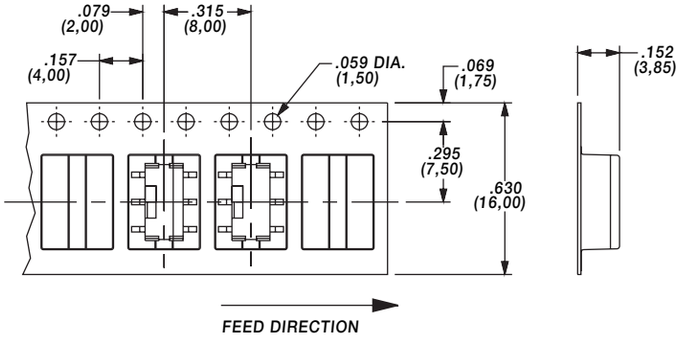

For part number AYZ0203AGRLC

Quantity per reel 3000

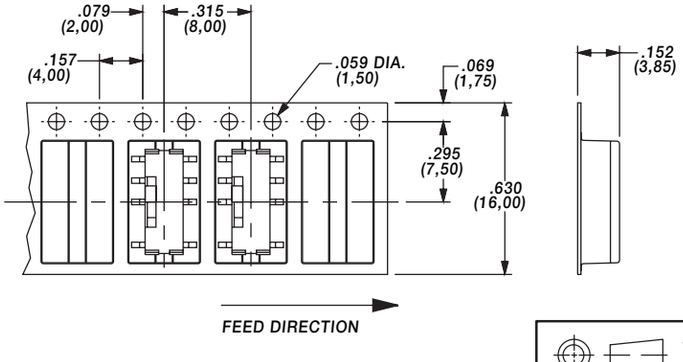

Third Angle Projection

Dimensions are shown: Inch (mm)
Specifications and dimensions subject to change

JS Series
Sub-Miniature Slide Switches

Features/Benefits

- ***Positive detent***
- ***Low profile***
- ***IR reflow to 260º solder profile***
- ***Surface and thru hole mounting***
- ***SPDT, DPDT, DP3T models***
- ***RoHS compliant***

Typical Applications

- ***Telecommunication products***
- ***Computer peripherals***
- ***Thermostat select switch***
- ***Instrumentations***

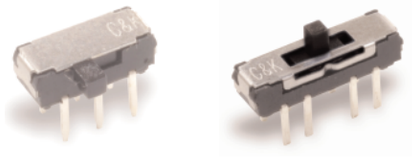

Specifications

CONTACT RATING: 6 VDC @ 0.3A
ELECTRICAL LIFE: 5,000 make-and-break cycles
CONTACT RESISTANCE: 70 m Ω max.
INSULATION RESISTANCE: 100 M Ω min. @ 500V.
DIELECTRIC STRENGTH: 500 VAC min. @ sea level.
OPERATING TEMPERATURE: -40ºC to +85ºC
STORAGE TEMPERATURE: -40ºC to +85ºC

NOTE: Specifications and materials listed above are for switches with standard options.
For information on specific and custom switches, consult Customer Service Center.

Materials

HOUSING: 4/6 nylon (UL94V-2), black.
ACTUATOR: 4/6 nylon (UL94V-2), black (some options white).
CONTACTS: Copper alloy, silver plated.
TERMINALS: Brass, silver plated

RIGHT ANGLE, PC THRU-HOLE

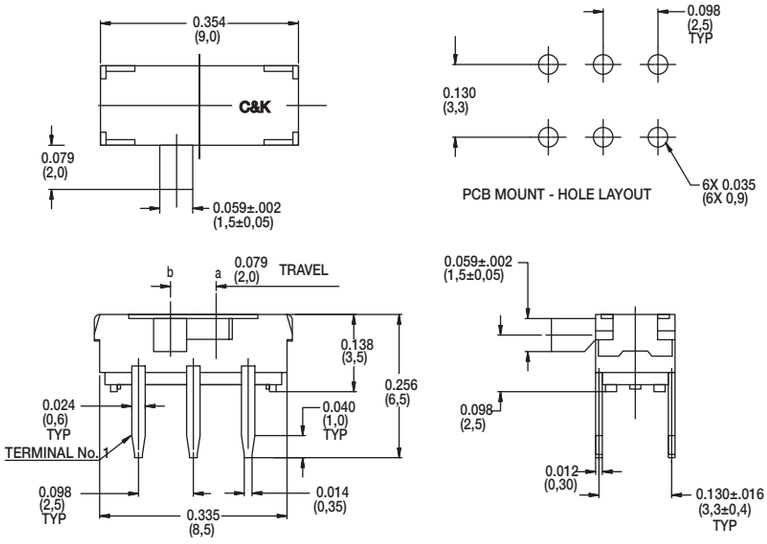

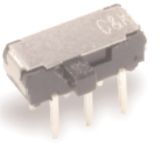

Part Number
JS202011AQN
DPDT

Shown in position b

Shown in position b

JS Series
Sub-Miniature Slide Switches

RIGHT ANGLE, PC THRU-HOLE

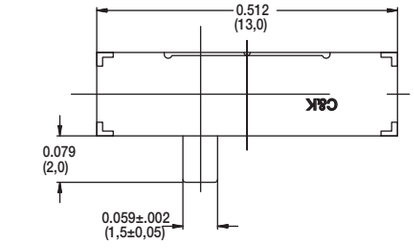

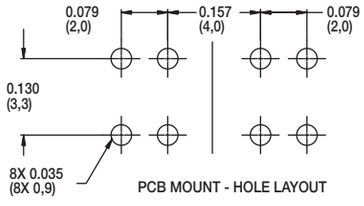

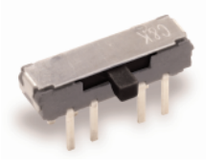

Part Number
JS203011AQN
DP3T

Shown in position b

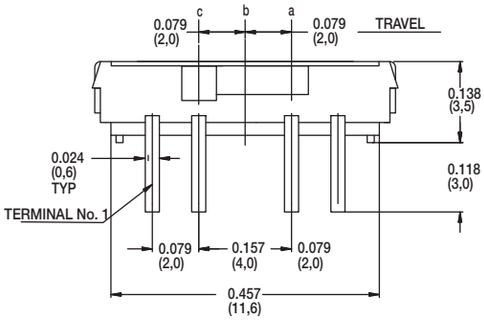

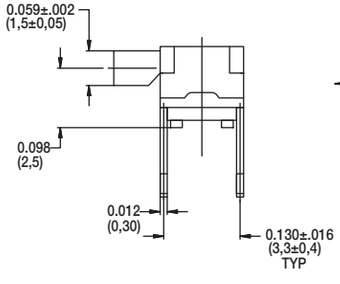

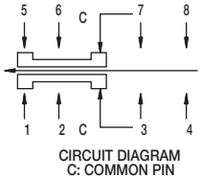

Shown in position c

PC THRU-HOLE

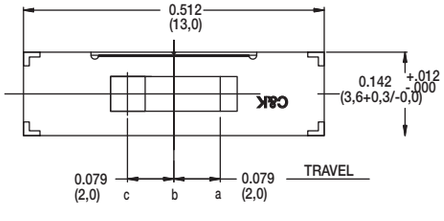

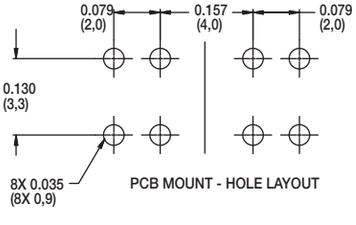

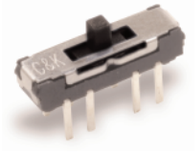

Part Number
JS203011CQN
DP3T

Shown in position b

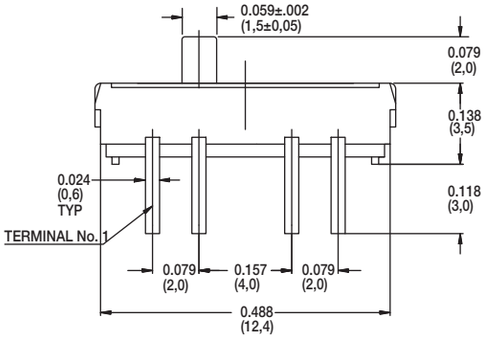

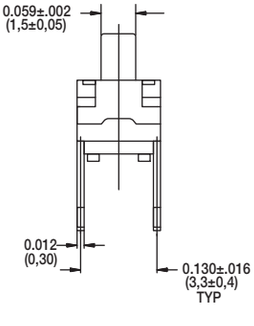

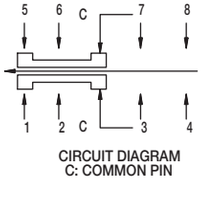

Shown in position c

Third Angle Projection

Dimensions are shown: Inch (mm)
Specifications and dimensions subject to change

PC THRU-HOLE

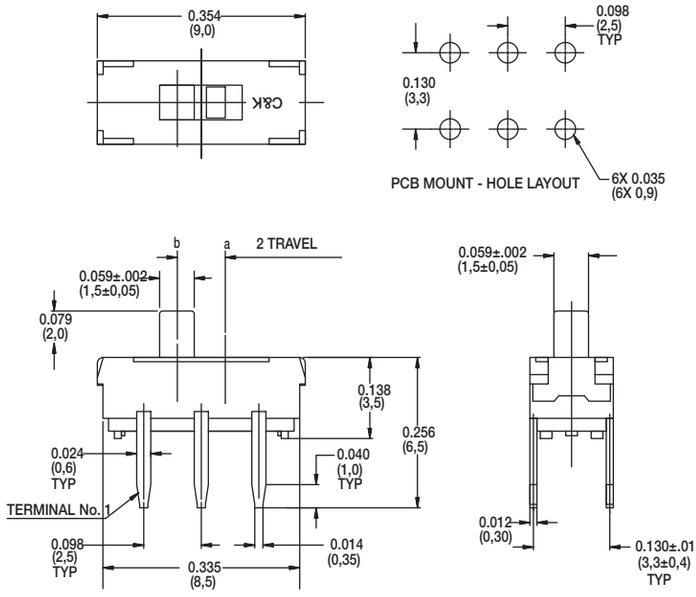

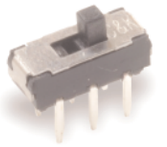

Part Number
JS202011CQN
DPDT

Shown in position a

Shown in position b

SURFACE MOUNT

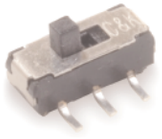

Part number
JS202011SCQN
DPDT

Shown in position b. Quantity per reel 1000

Available in tape & reel only, see page I-58

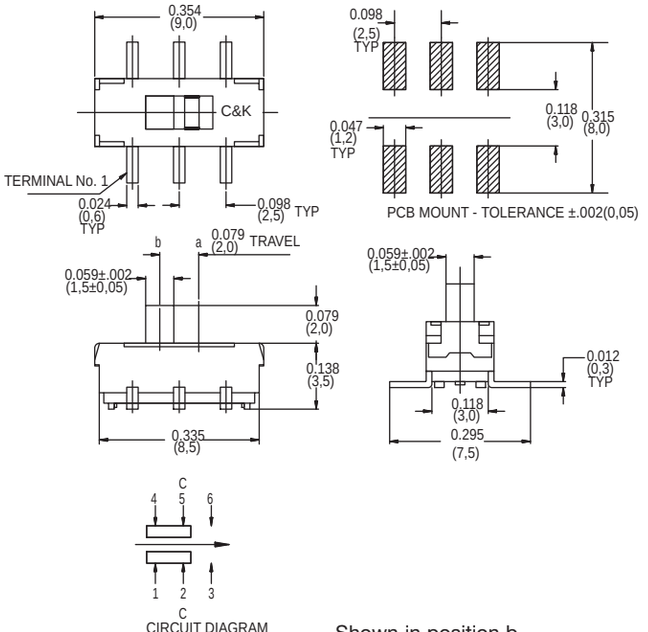

Shown in position b

Part number
JS203011SCQN
DP3T

Quantity per reel 900

Available in tape & reel only, see page I-60

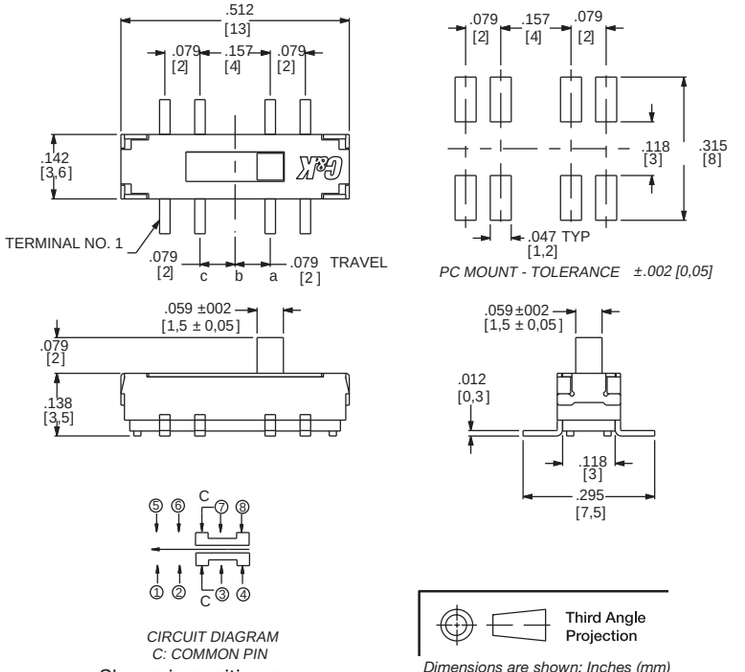

Shown in position a

Third Angle Projection

Dimensions are shown: Inches (mm)
Specifications and dimensions subject to change

JS Series
Sub-Miniature Slide Switches

RIGHT ANGLE SURFACE MOUNT

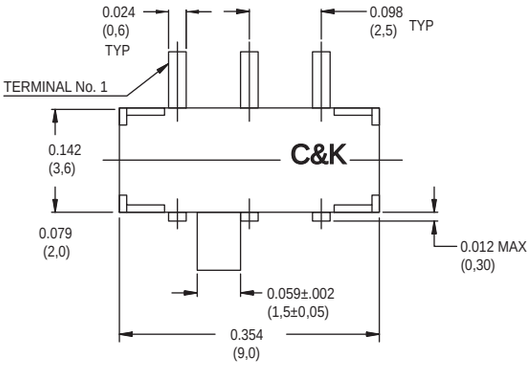

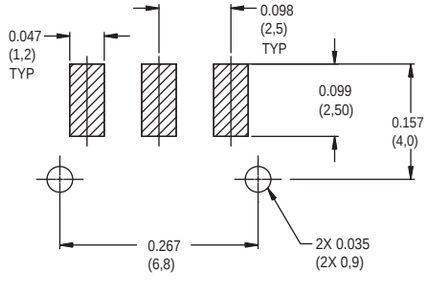

PCB MOUNT - HOLE LAYOUT

Part Number
JS102011SAQN
SPDT

Shown in position a

Available in tape & reel
only, see page I-59

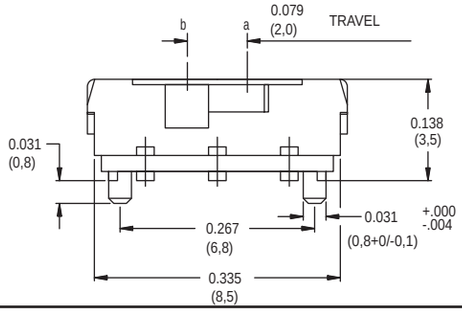

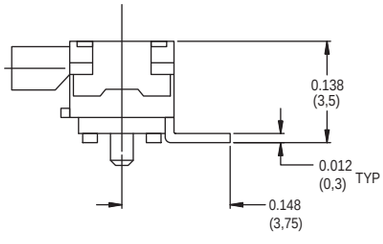

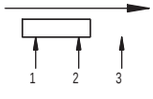

CIRCUIT DIAGRAM
C: COMMON PIN

Shown in position b

PC THRU-HOLE

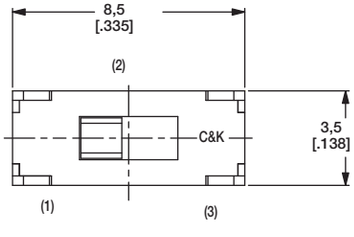

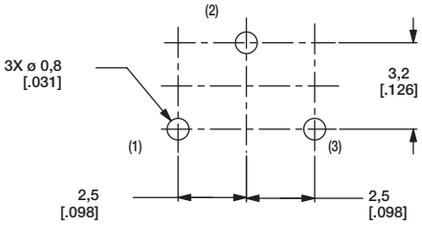

PCB LAYOUT RECOMMENDED

Part Number
JS102011CQN
SPDT

Shown in position a

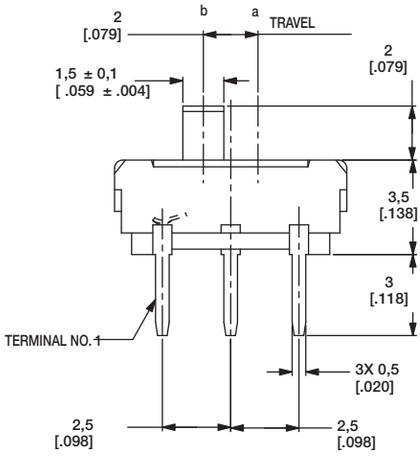

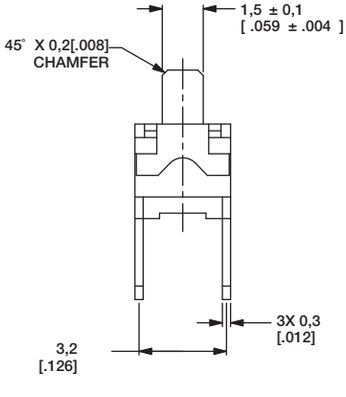

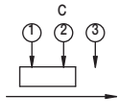

SCHEMATIC

Shown in position b

Third Angle
Projection

Dimensions are shown: Inch (mm)
Specifications and dimensions subject to change

SURFACE MOUNT

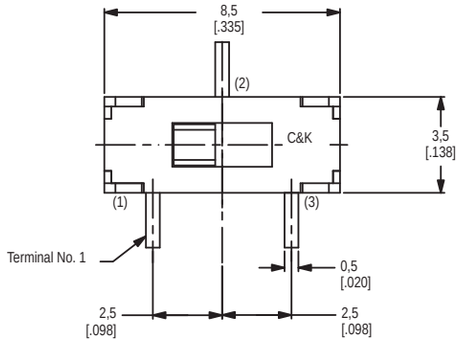

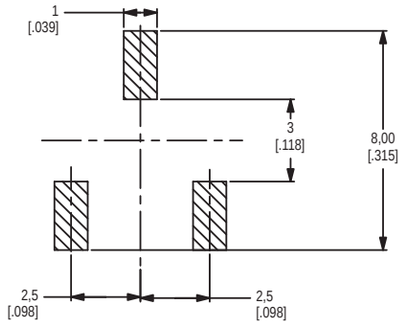

PCB LAYOUT RECOMMENDED

Part Number
JS102011SCQN
SPDT

Shown in position a

Available in tape & reel only, see page I-59

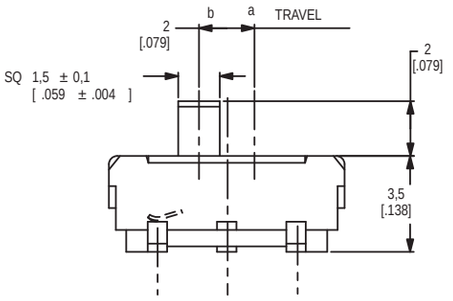

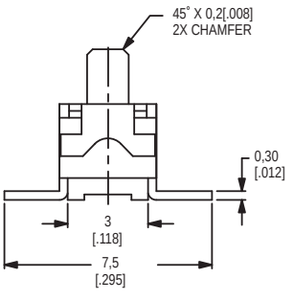

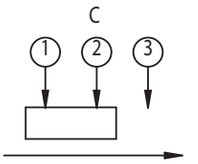

SCHEMATIC
Shown in position b

SURFACE MOUNT

NEW

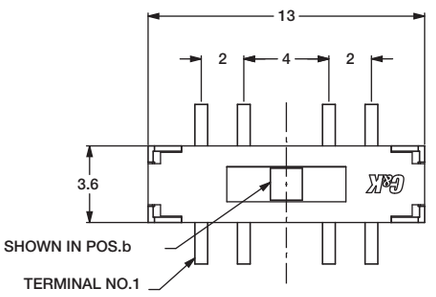

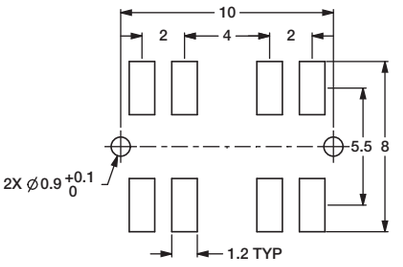

PC MOUNT - TOLERANCE ±.05

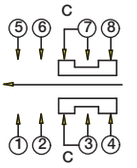

CIRCUIT DIAGRAM
C: COMMON PIN
BOTTOM VIEW

SWITCH FUNCTION		
POS.c	POS.b	POS.a
C&K	C&K	C&K
(MOM)	ON	ON
CONNECTED TERMINALS		
1-3,5-7	2-3,6-7	3-4,7-8

Part Number
JS207011SCQNR
DP3T

Shown in position b

Available in tape & reel only, see page I-58

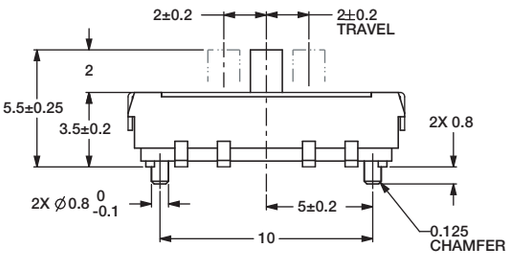

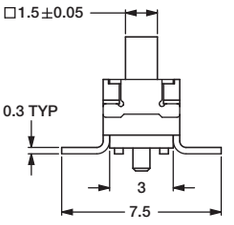

Third Angle Projection

Dimensions are shown: Inches (mm)
Specifications and dimensions subject to change

JS Series
Sub-Miniature Slide Switches

PC THRU-HOLE

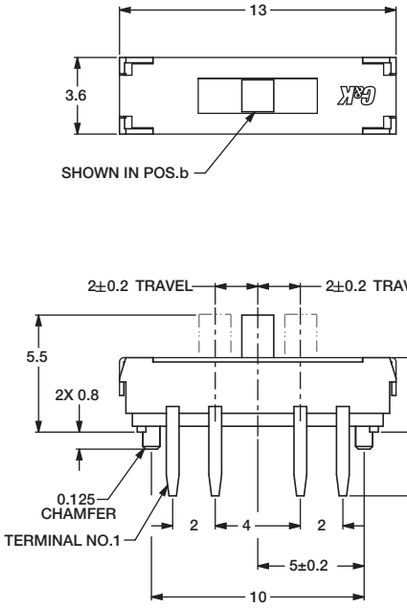

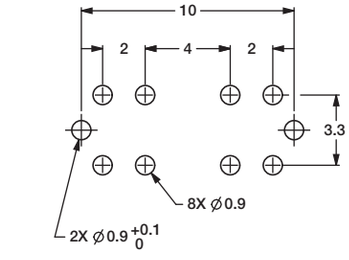

PC MOUNT - TOLERANCE ±.05

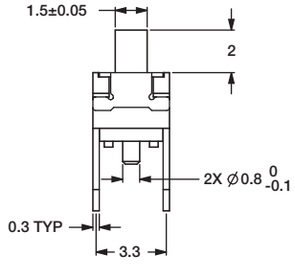

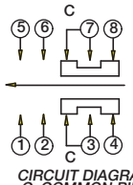

CIRCUIT DIAGRAM
C: COMMON PIN
BOTTOM VIEW

SWITCH FUNCTION		
POS.c	POS.b	POS.a
C&K	C&K	C&K
(MOM)	ON	ON
CONNECTED TERMINALS		
1-3,5-7	2-3,6-7	3-4,7-8

NEW

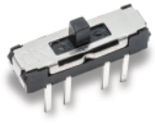

Part Number
JS207011CQNR
DP3T

Shown in position b

RIGHT ANGLE SURFACE MOUNT

NEW

Part Number
JS102011JAQN
SPDT

Shown in position

Available in tape & reel
only, see page I-59

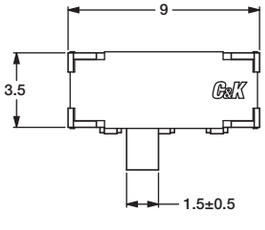

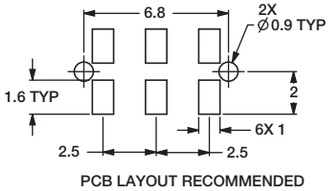

PCB LAYOUT RECOMMENDED

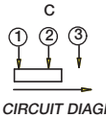

CIRCUIT DIAGRAM
C: COMMON PIN
BOTTOM VIEW

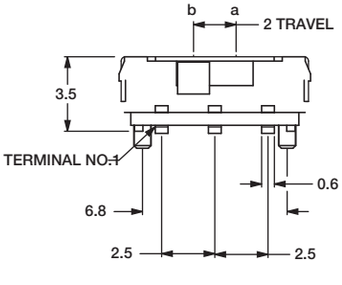

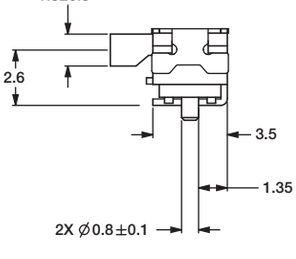

Third Angle
Projection

Dimensions are shown: mm
Specifications and dimensions subject to change

VERTICAL MOUNT SMT - J BEND

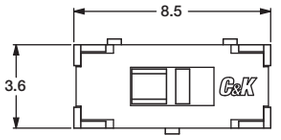

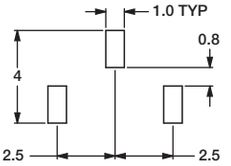

PCB LAYOUT RECOMMENDED

CIRCUIT DIAGRAM
C: COMMON PIN
BOTTOM VIEW

NEW

Part Number
JS102011JCQN
SPDT

Available in tape & reel only, see page I-59

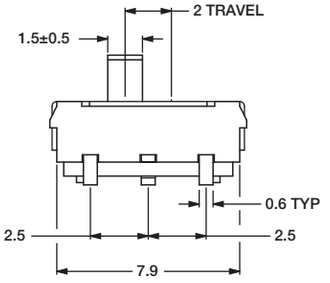

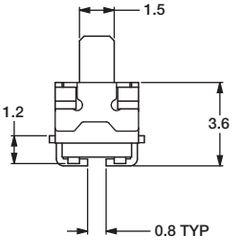

RIGHT ANGLE SURFACE MOUNT

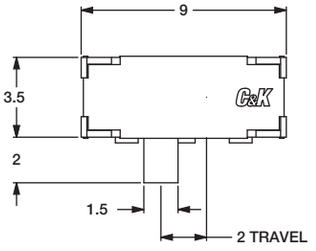

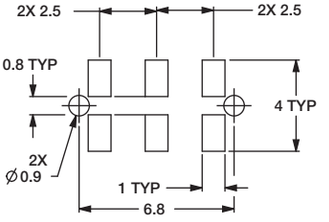

PCB LAYOUT RECOMMENDED

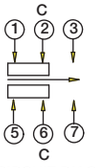

CIRCUIT DIAGRAM
C: COMMON PIN
BOTTOM VIEW

NEW

Part Number
JS202011JAQN
DPDT

Shown in position

Available in tape & reel only, see page I-61

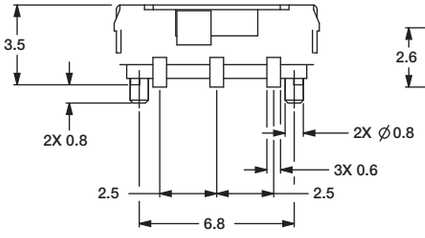

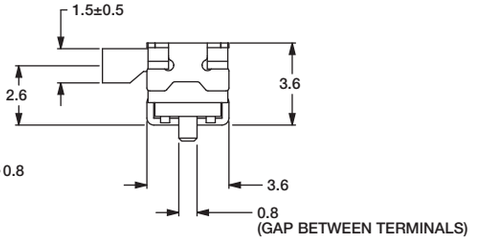

Third Angle Projection

Dimensions are shown: mm
Specifications and dimensions subject to change

JS Series
Sub-Miniature Slide Switches

VERTICAL MOUNT SMT - J BEND

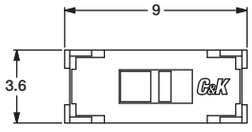

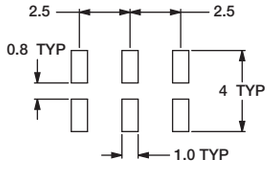

PCB LAYOUT RECOMMENDED

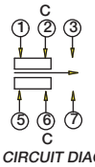

CIRCUIT DIAGRAM
C: COMMON PIN
BOTTOM VIEW

NEW

Part Number
JS202011JCQN
DPDT

Shown in position

Available in tape & reel
only, see page I-61

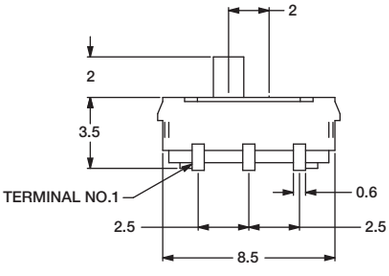

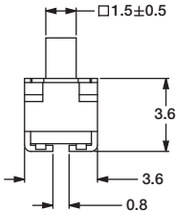

RIGHT ANGLE MOUNT SMT - J BEND

NEW

Part Number
JS203011JAQN
DP3T

Shown in position

Available in tape & reel
only, see page I-60

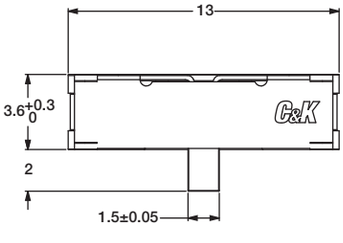

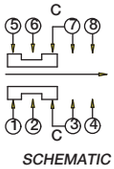

SCHEMATIC
C: COMMON PIN

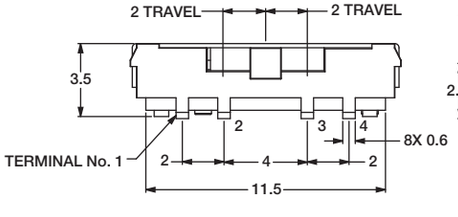

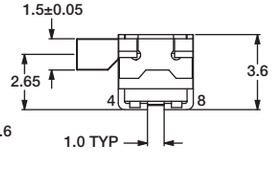

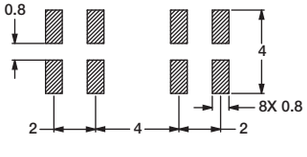

PCB LAYOUT RECOMMENDED

Third Angle
Projection

Dimensions are shown: mm
Specifications and dimensions subject to change

VERTICAL MOUNT SMT - J BEND

NEW

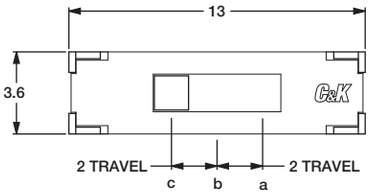

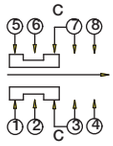

SCHEMATIC
C: COMMON PIN

Part Number
JS203011JCQN
DP3T

Available in tape & reel only, see page I-60

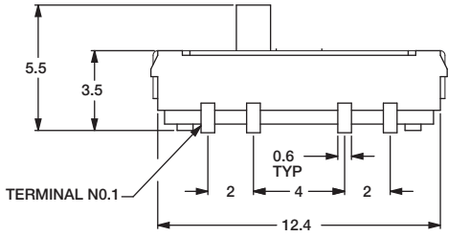

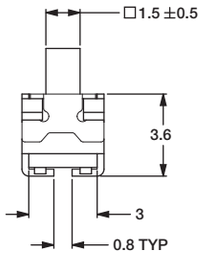

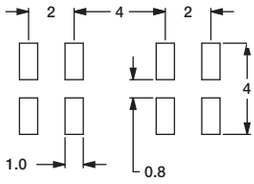

PCB LAYOUT RECOMMENDED

SURFACE MOUNT - J BEND

NEW

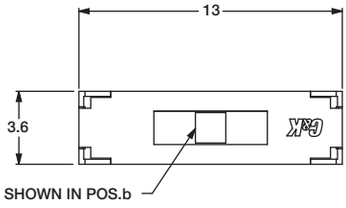

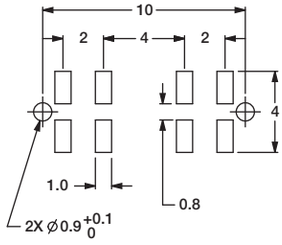

PC MOUNT - TOLERANCE ±.05

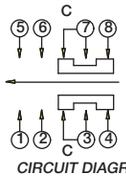

CIRCUIT DIAGRAM
C: COMMON PIN
BOTTOM VIEW

Part Number
JS207011JCQNR
SP3T

Available in tape & reel only, see page I-58

SWITCH FUNCTION		
POS.c	POS.b	POS.a
C&K	C&K	C&K
(MOM)	ON	ON
CONNECTED TERMINALS		
1-3,5-7	2-3,6-7	3-4,7-8

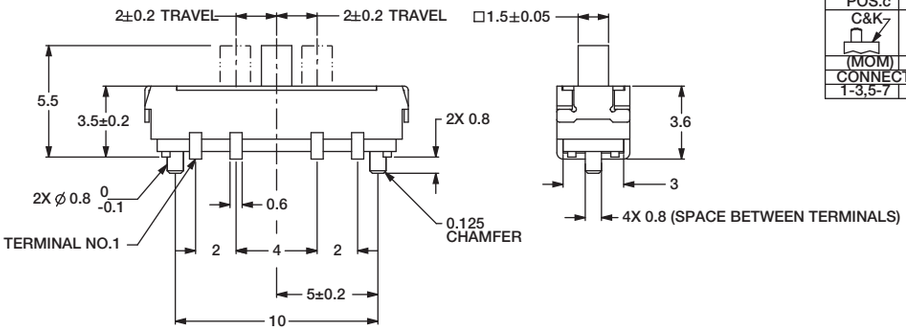

TAPE AND REEL FOR PART NUMBER JS207011SCQNR, JS207011JCQNR

Quantity per reel 800

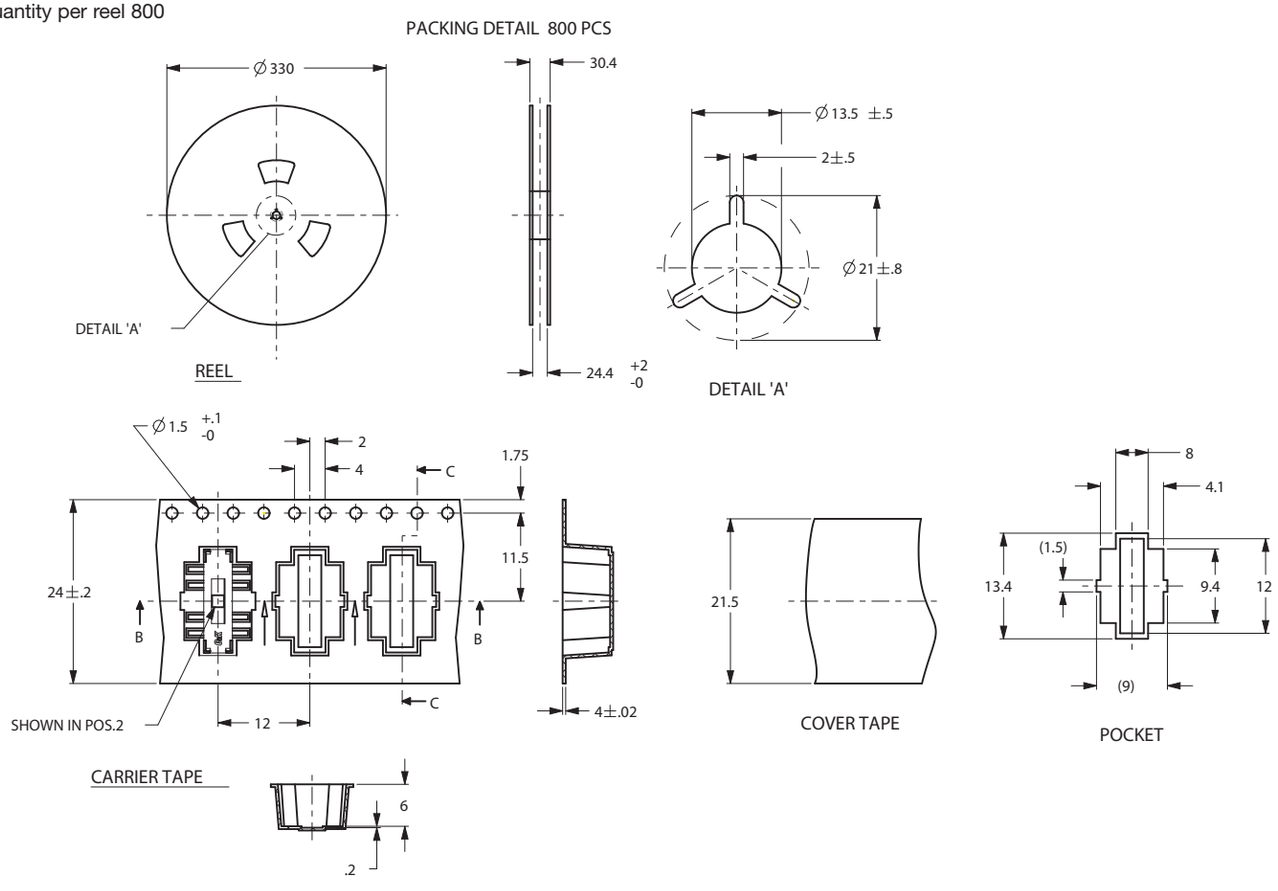

TAPE AND REEL FOR PART NUMBER JS202011SCQN

Quantity per reel 1000

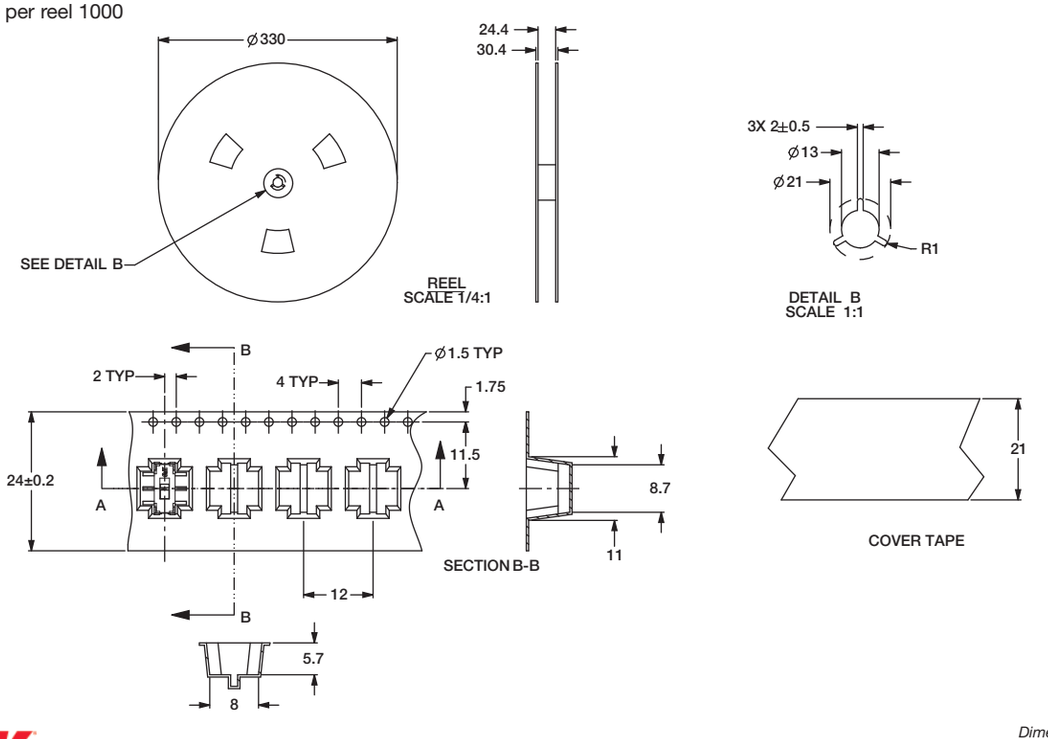

TAPE AND REEL FOR
PART NUMBER JS102011SCQN, JS102011JCQN

Quantity per reel 1000

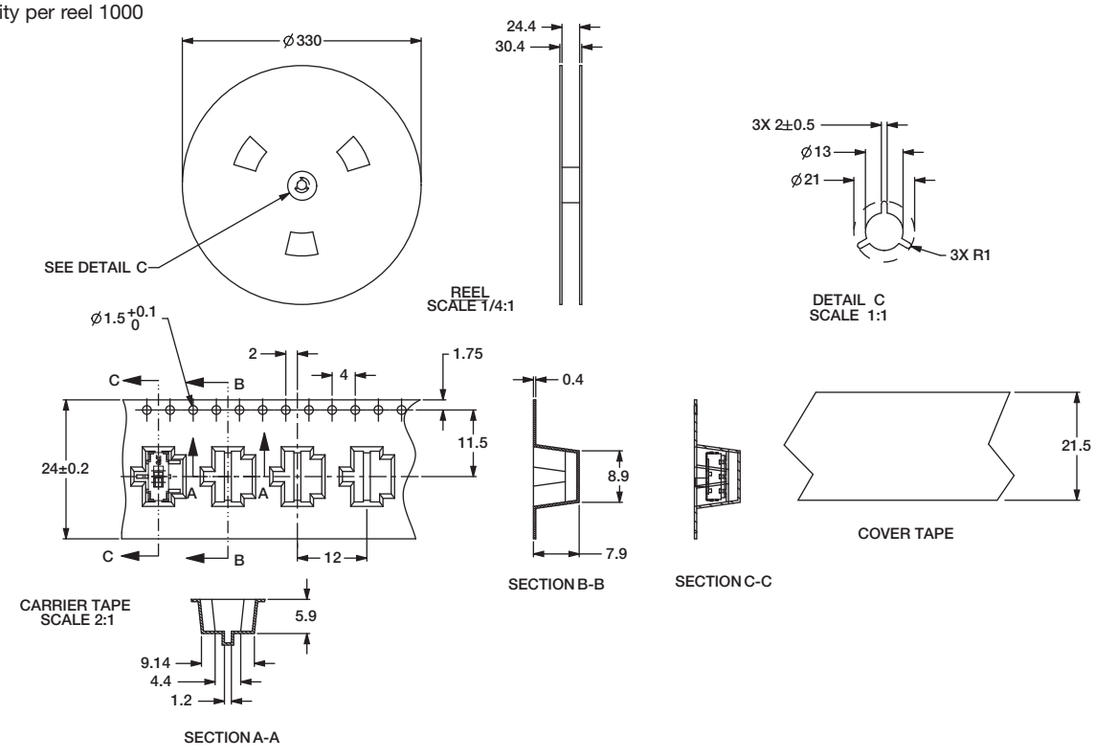

TAPE AND REEL FOR PART NUMBER JS102011SAQN, JS102011JAQN

Quantity per reel 1000

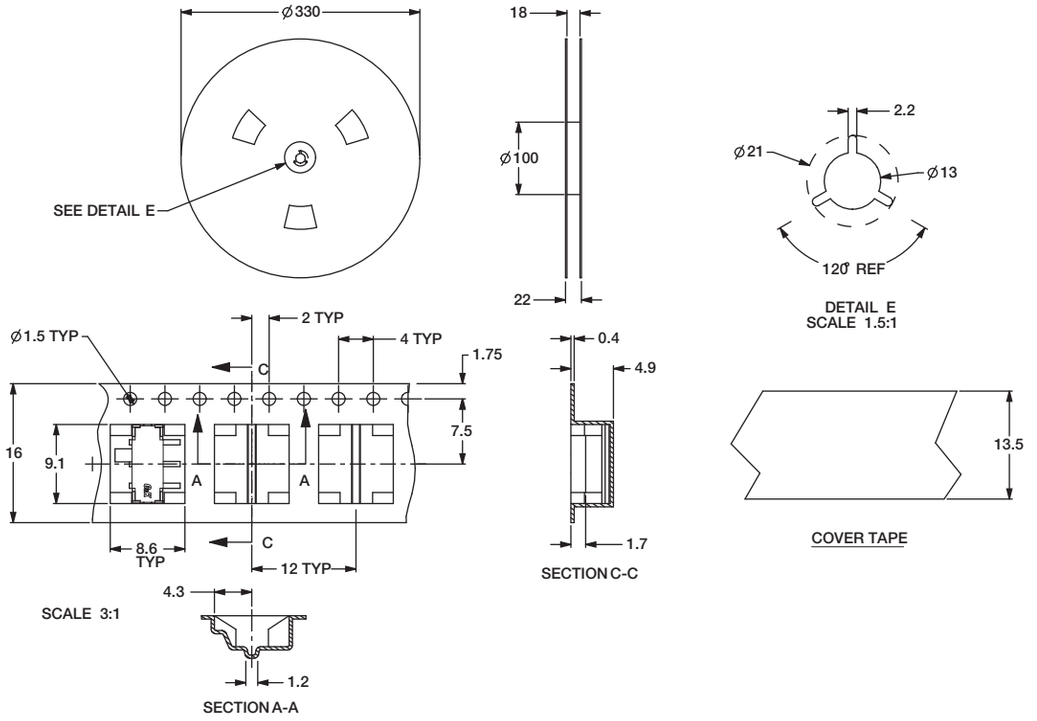

Third Angle Projection

Dimensions are shown: mm
Specifications and dimensions subject to change

TAPE AND REEL FOR PART NUMBER JS203011SCQN, JS203011JCQN
Quantity per reel 900

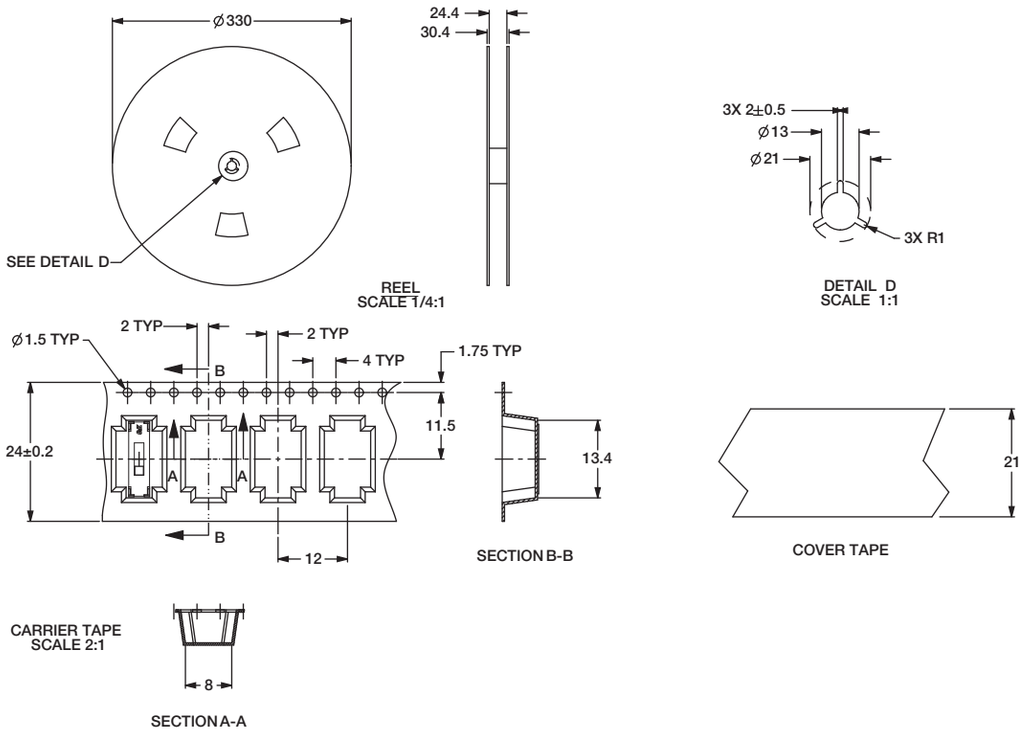

TAPE AND REEL FOR PART NUMBER JS203011JAQN

Quantity per reel 1000

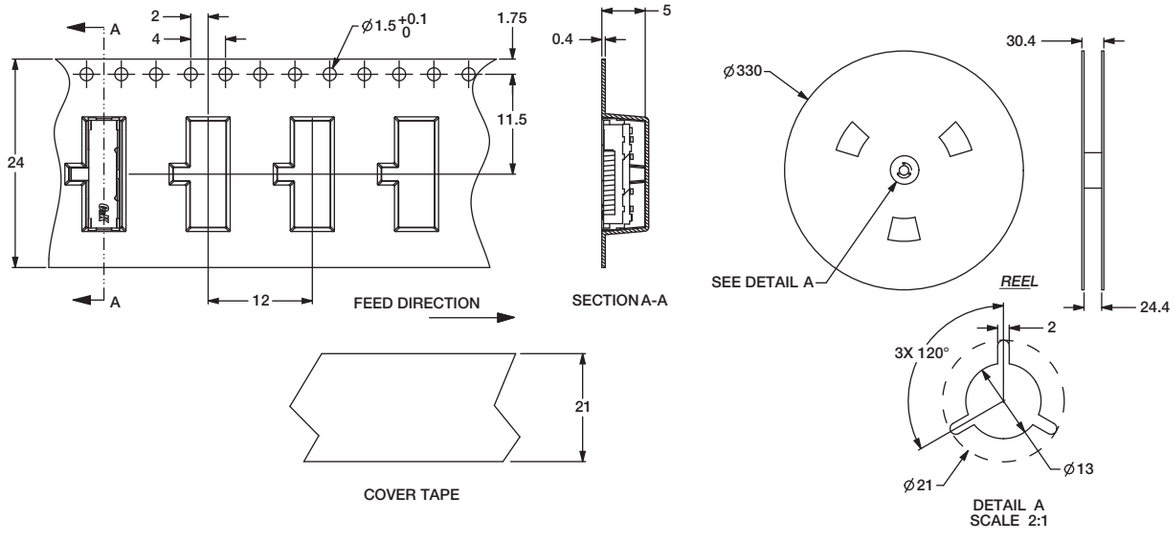

TAPE AND REEL FOR
PART NUMBER JS202011JCQN
Quantity per reel 1300

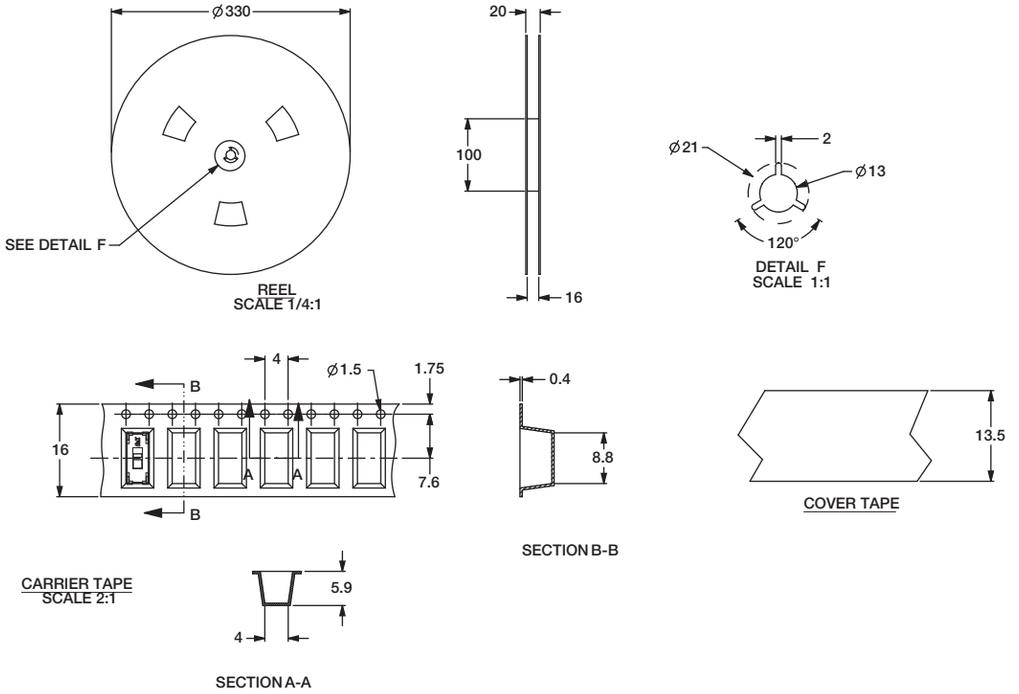

TAPE AND REEL FOR PART NUMBER JS202011JAQN
Quantity per reel 1000

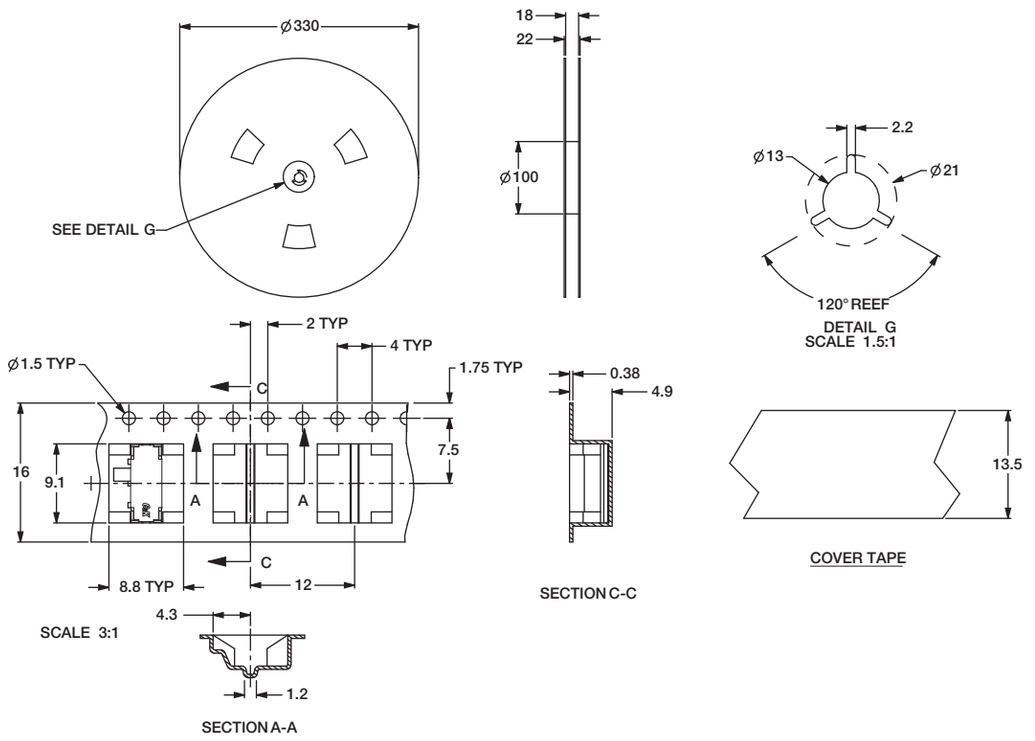

JS Series
Sub-Miniature Slide Switches

RIGHT ANGLE SURFACE MOUNT
LOW PROFILE .028±.004 (0.7±0.1) HIGH

Part Number
JS102000SAQN
SPDT

Specifications

CONTACT RATING: 5 VDC @ 1MA
ELECTRICAL LIFE: 15,000 cycles.
CONTACT RESISTANCE: <100 m ohms (initial) <200 m ohms (after processing).
INSULATION RESISTANCE: 100 m ohms @500 VDC.
DIELECTRIC STRENGTH: 250 VAC.
OPERATING TEMPERATURE: -40ºC to +85ºC

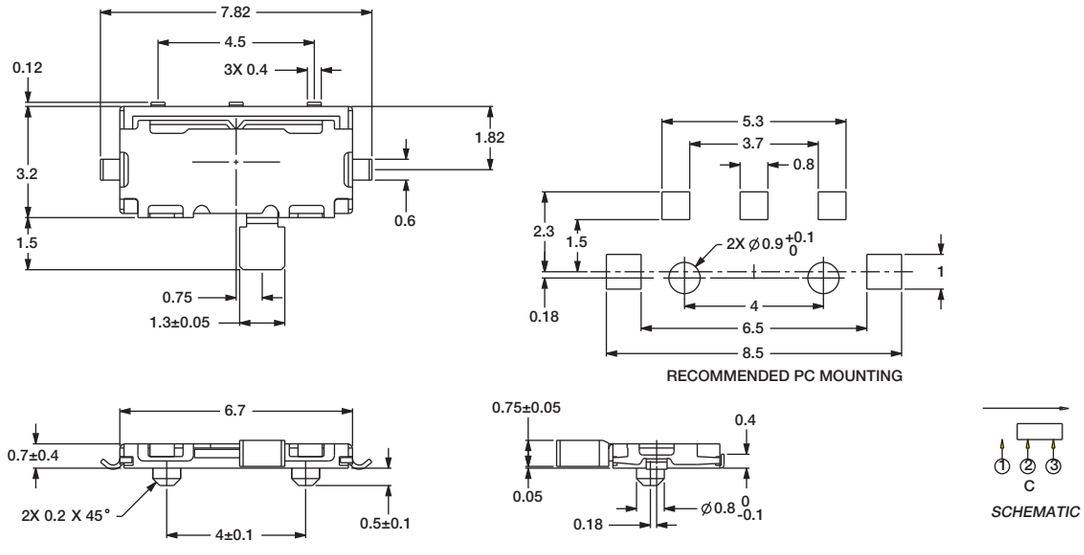

TAPE AND REEL FOR PART NUMBER JS102000SAQN

Quantity per reel 4000

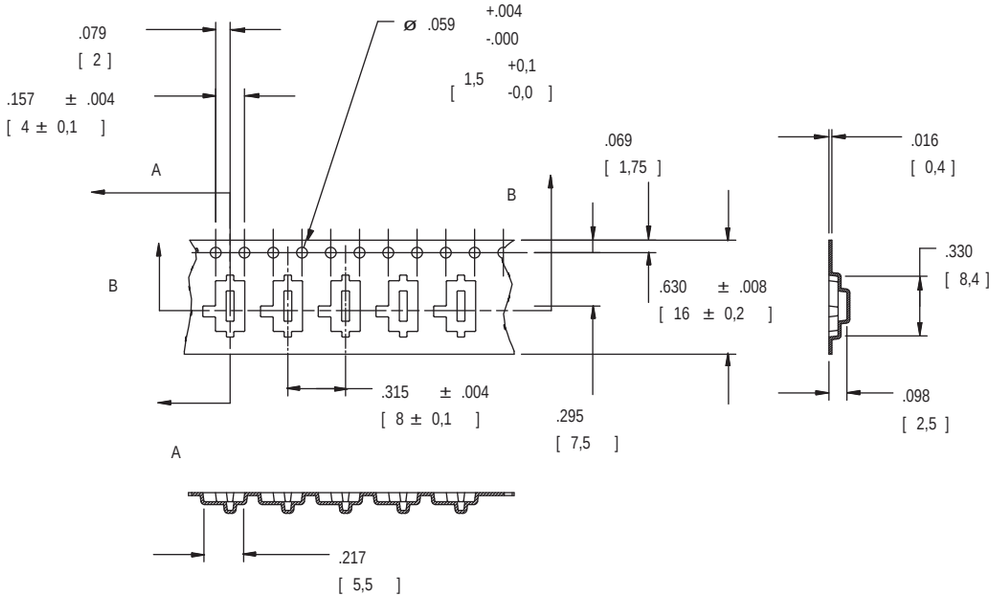

Features/Benefits

- ***RoHS compliant and meets all requirements of RoHS directive 2002/95EC, Halogen Free***
- ***Positive detent***
- ***Low profile***
- ***IR reflow to 260º solder profile***
- ***Surface and thru hole mounting***
- ***Maintained and momentary functions***
- ***SPDT, SP3T models***

Typical Applications

- ***Telecommunication products***
- ***Computer peripherals***
- ***Thermostat select switch***
- ***Instrumentations***

Specifications

CONTACT RATING: 4 VDC @ 0.3A
ELECTRICAL LIFE: 10,000 make-and-break cycles at full load.
CONTACT RESISTANCE: 70 m Ω max.
INSULATION RESISTANCE: 100 M Ω min. @ 500V.
DIELECTRIC STRENGTH: 100 VAC min. @ sea level.
OPERATING TEMPERATURE: -10ºC to +60ºC
STORAGE TEMPERATURE: -30ºC to +85ºC

NOTE: Specifications and materials listed above are for switches with standard options.
For information on specific and custom switches, consult Customer Service Center.

Materials

HOUSING: LCP, Glass filled (Halogen free)
ACTUATOR: 4/6 nylon (UL94V-2), black.
CONTACTS: Berylium copper, silver plated.
TERMINALS: Brass, silver plated.
COVER: Stainless steel
RETURN SPRING: Stainless steel

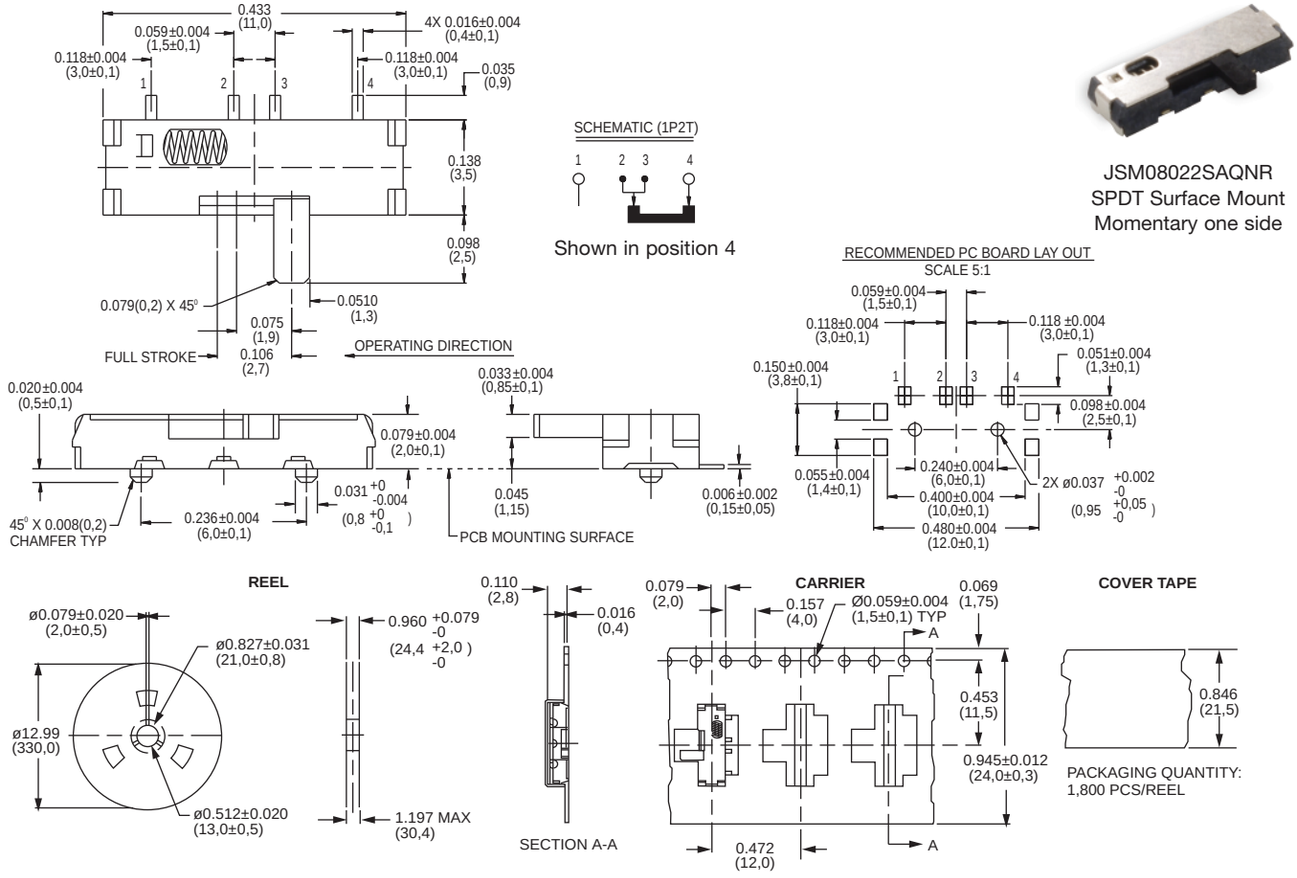

JSM08022SAQNR
SPDT Surface Mount
Momentary one side

Third Angle Projection

Dimensions are shown: Inches (mm)
Specifications and dimensions subject to change

JSM Series
Sub-Miniature Slide Switches

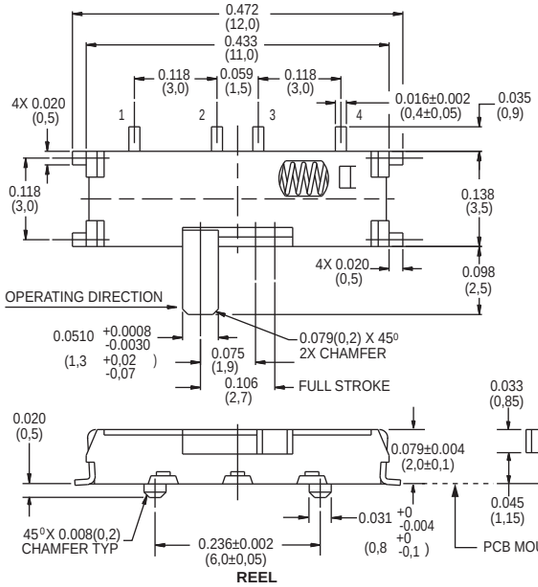

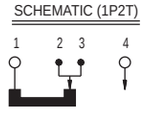

Shown in position 1

JSM08022SAQNL
SPDT Surface Mount
Momentary only

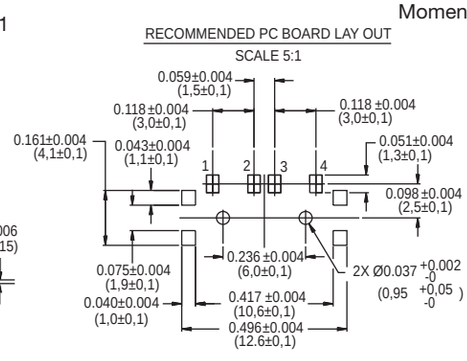

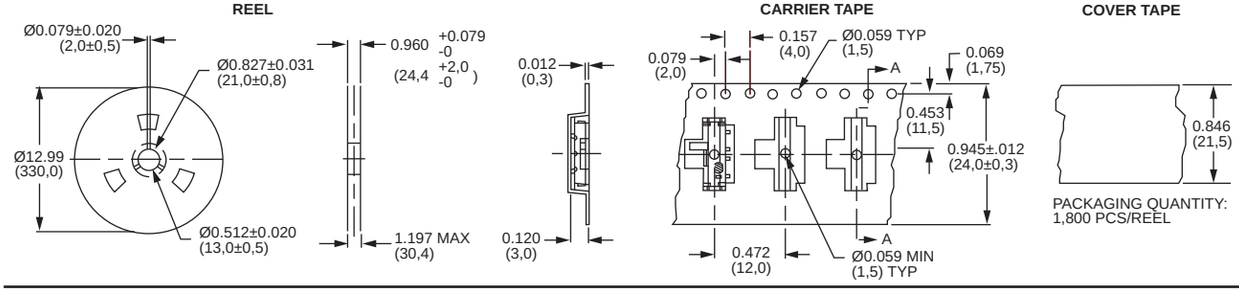

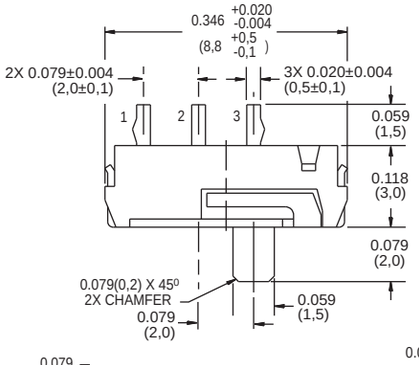

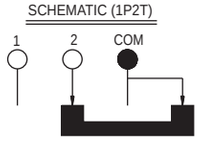

Shown in position 2

JSM08011SAQNR
SPDT Surface Mount
Momentary only

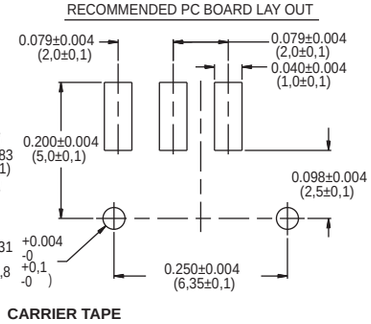

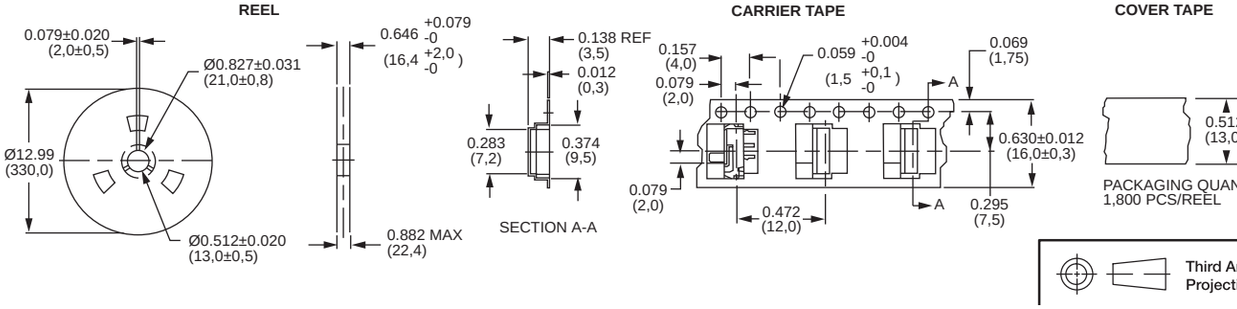

Third Angle Projection

Dimensions are shown: Inch (mm)
Specifications and dimensions subject to change

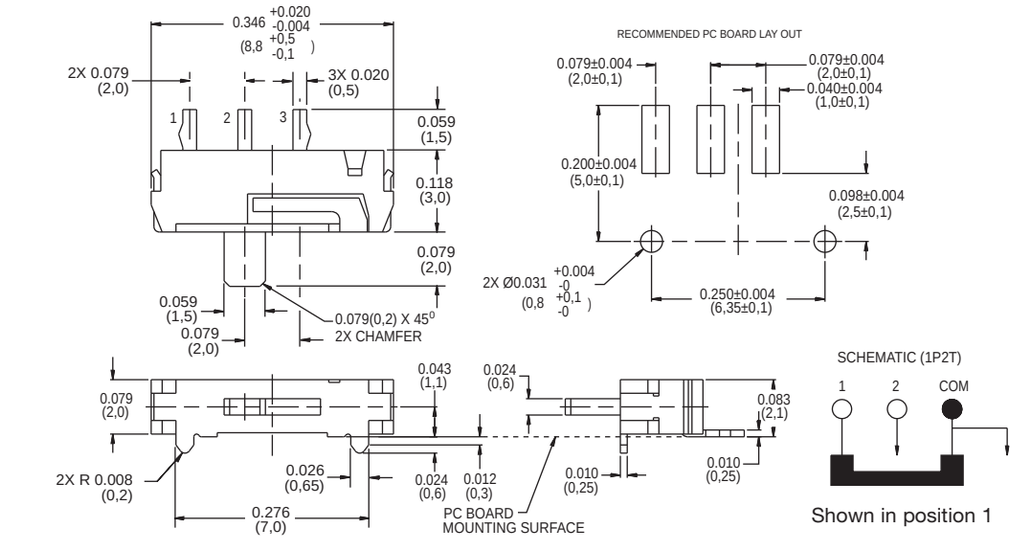

JSM08011SAQNL
SPDT Surface Mount
Momentary only

Shown in position 1

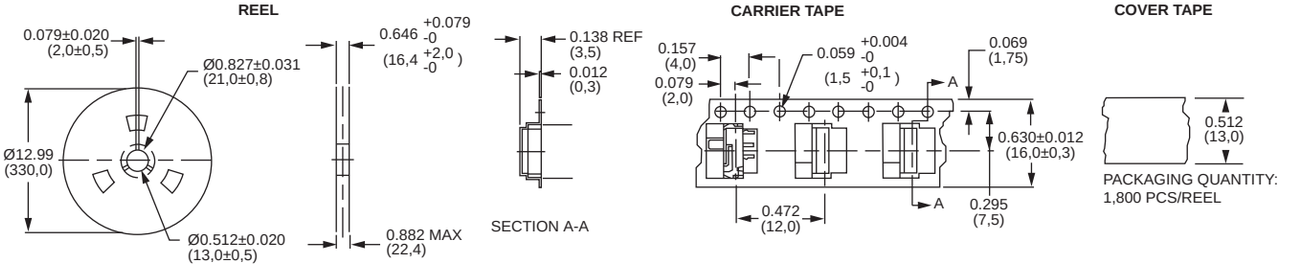

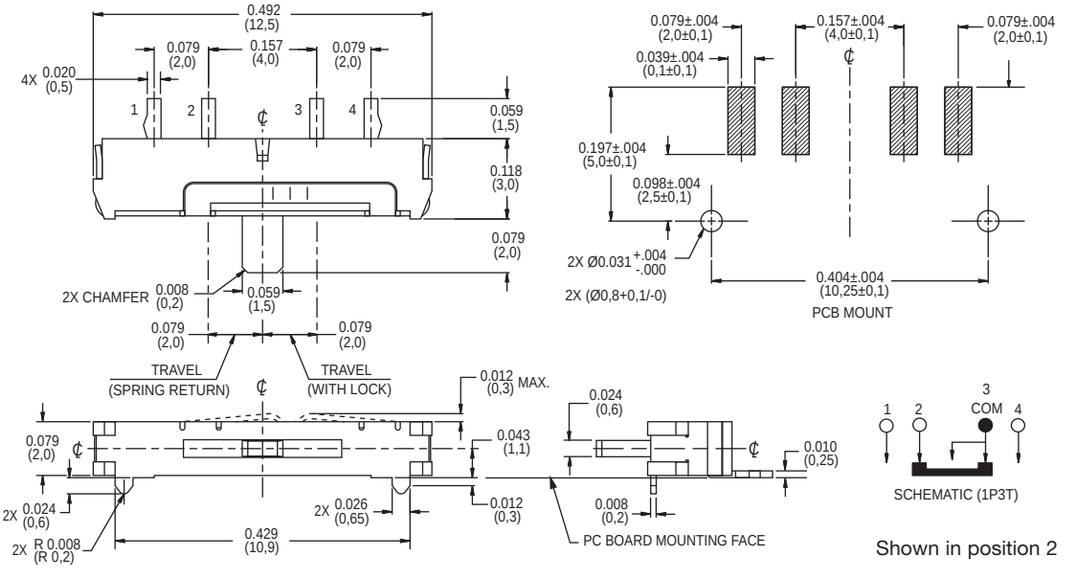

JSM07011SAQNR
SP3T Surface Mount
Momentary one side
& Maintained the other

Shown in position 2

JSM Series
Sub-Miniature Slide Switches

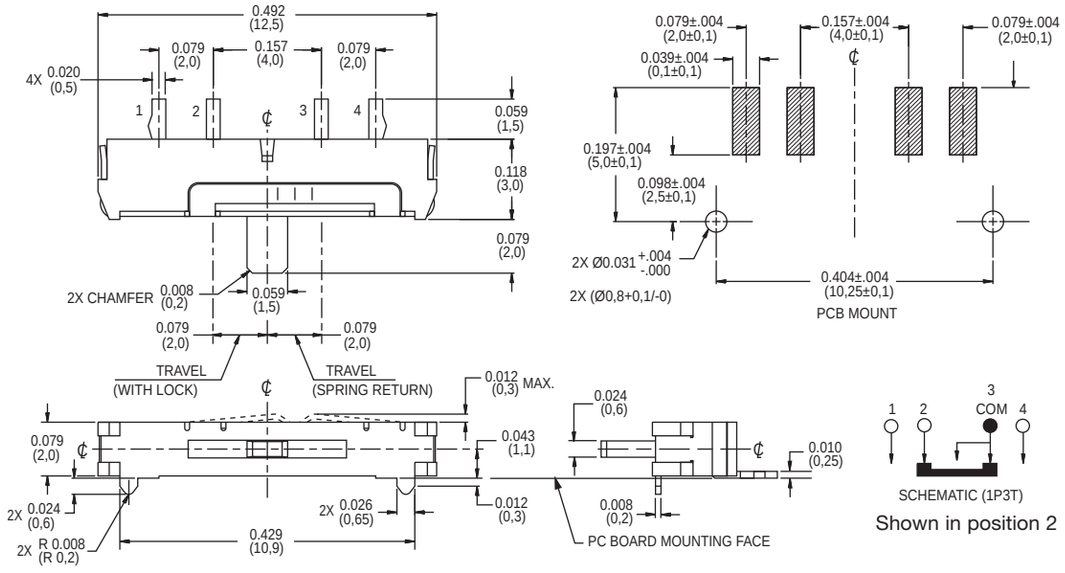

JSM07011SAQNL
SP3T Surface Mount
Momentary one side
& Maintained the other

SCHEMATIC (1P3T)

Shown in position 2

Packaging for JSM07011SAQNR and JSM07011SAQNL

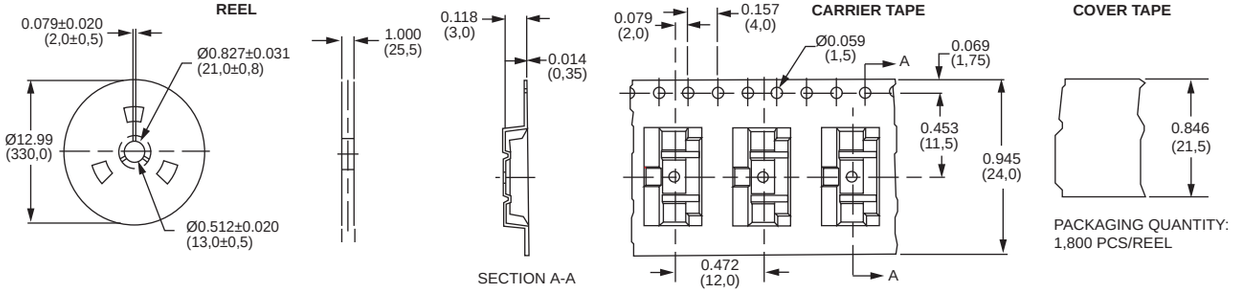

PACKAGING QUANTITY:
1,800 PCS/REEL

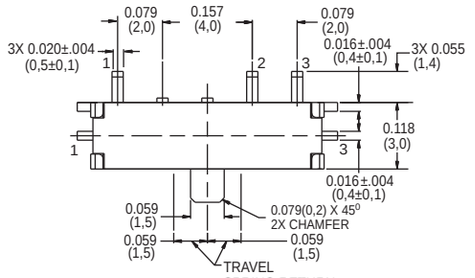

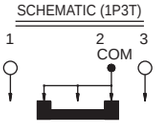

Shown in position 2

JSM05000SAQN
SP3T Surface Mount
Momentary both
sides

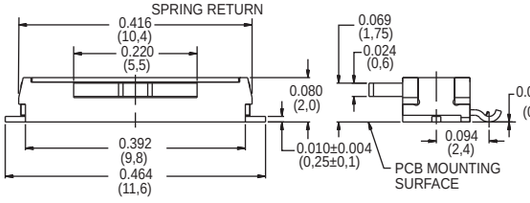

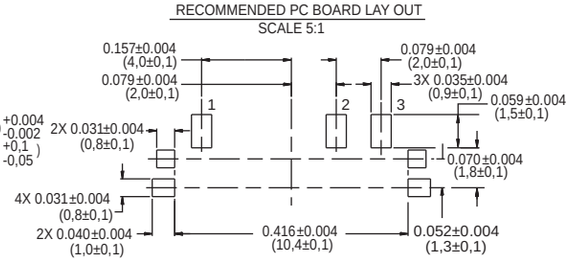

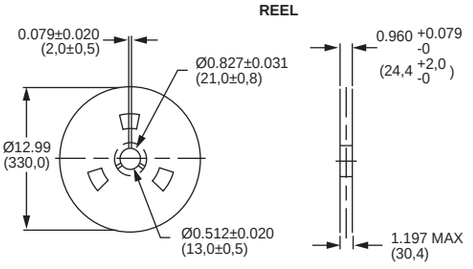

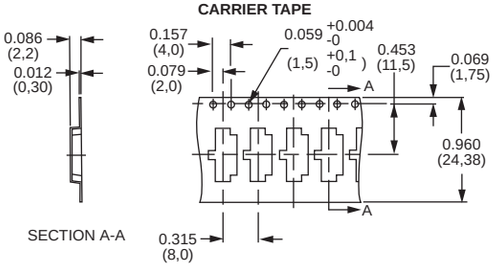

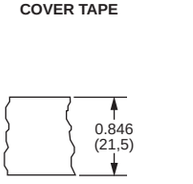

PACKAGING QUANTITY:
3,400 PCS/REEL

Third Angle Projection

Dimensions are shown: Inches (mm)
Specifications and dimensions subject to change

JSX Series
Sub-Miniature Slide Switch

Features/Benefits

- ***RoHS compliant and meets all requirements of RoHS directive 2002/95EC***
- ***Low profile***
- ***SPDT momentary action***
- ***Long electrical and mechanical life***

Typical Applications

- ***On/Off touch screens***
- ***Handheld games***
- ***Remote controls***
- ***Instrumentation***

Specifications

CONTACT RATING: 10 mA @ 5VDC (resistive).
ELECTRICAL LIFE: 100,000 cycles.
CONTACT RESISTANCE: 70 m Ω max. initial.
200 m Ω max. after life testing.
INSULATION RESISTANCE: 100 M Ω min. @ 100VDC.
DIELECTRIC STRENGTH: 100 VAC for 1 min. @ 50/60 Hz/2mA.
OPERATING TEMPERATURE: -25ºC to +70ºC
STORAGE TEMPERATURE: -40ºC to +85ºC
-25˚C to +55˚C (in tape & reel packaging)

Materials

HOUSING: LCP, Glass filled.
ACTUATOR: 4/6 nylon (UL94V-2), black.
CONTACTS: Berylium copper, silver plated.
TERMINALS: Phosphur bronze or StSt, silver plated.
COVER: Nickel silver or Stainless steel, silver plated.
RETURN SPRING: Stainless steel.

NOTE: Specifications and materials listed above are for switches with standard options. For information on specific and custom switches, consult Customer Service Center.

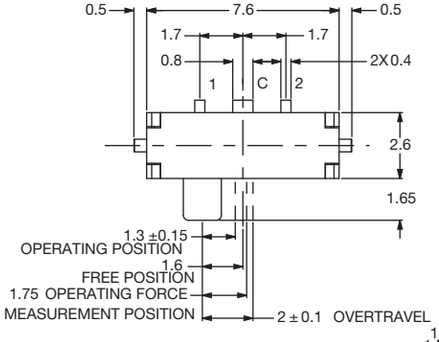

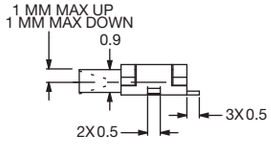

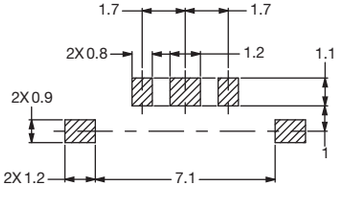

PCB LAYOUT

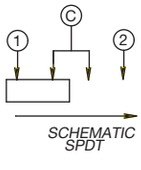

SCHEMATIC SPDT

JSX08001SAQNL
SPDT Surface Mount
Momentary only

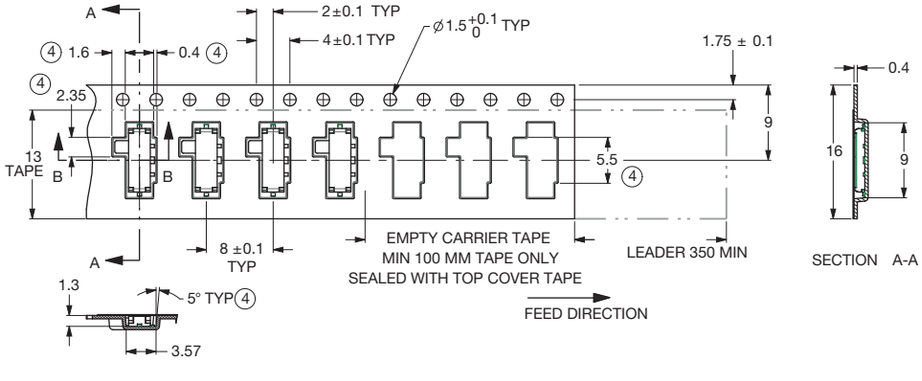

Third Angle Projection

Dimensions are shown: mm
Specifications and dimensions subject to change

Features/Benefits

- *Broad range of products*
- *Various circuit design, SPDT, 4P3T, vertical, right angle*
- *Compact miniature slide switch*
- *Shorting or non-shorting*
- *Custom design available*

Typical Applications

- *Consumer electronics*
- *Computer peripherals*
- *Telecommunication*
- *Audio & visual equipment*
- *Medical*
- *Automotive*

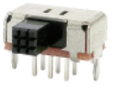

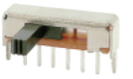

SK-13D21-G 2RT 1P3T NON-SHORTING

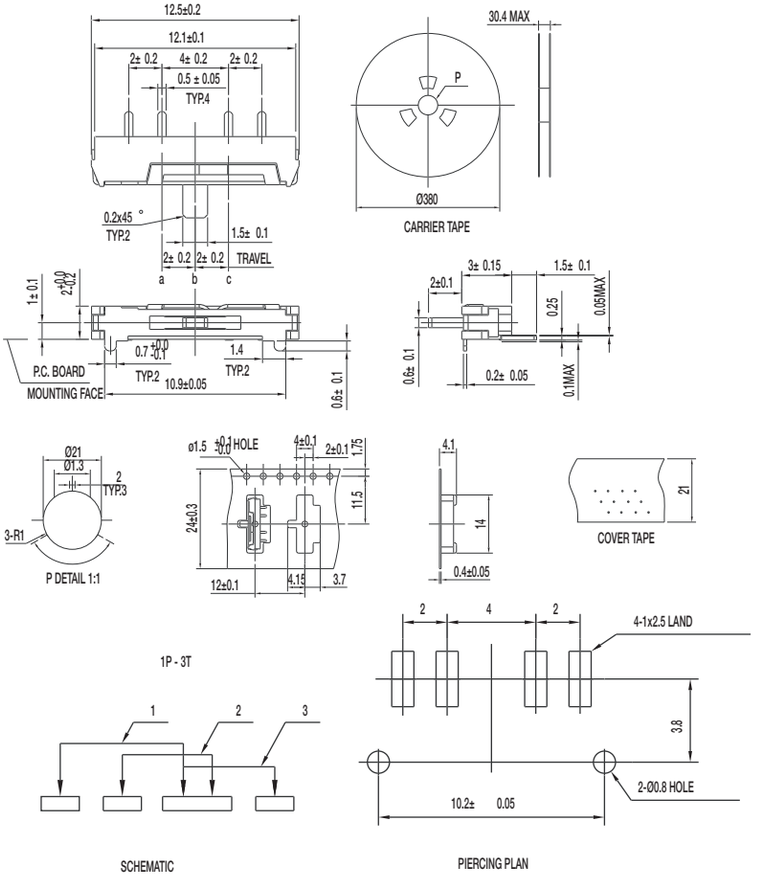

Specifications

CONTACT RATING: 0.3A @ 4 VDC

INITIAL CONTACT RESISTANCE: 70 m ohms max.

INSULATION RESISTANCE: 100 M ohms min.

DIELECTRIC STRENGTH: 500 V AC (50-60 Hz) between open terminals and between the frame and terminal.

OPERATING LIFE: 10,000 cycles with load

OPERATING FORCE: 125 ± 50 gf (1.23 ± 0.49N)
200 ± 50 gf (1.96 ± 0.49N)

TRAVEL: 2 ± 0.3 mm

OPERATING TEMPERATURE: -20˚C to 70˚C

Materials

HOUSE: LCP (UL 94V-0)

KNOB: PA (UL 94V-0)

FRAME: SUS

CONTACT: Silver clad

TERMINAL: Silver plated

SK Series
Miniature Slide Switches

SK-22D01-SG NS DPDT NON-SHORTING

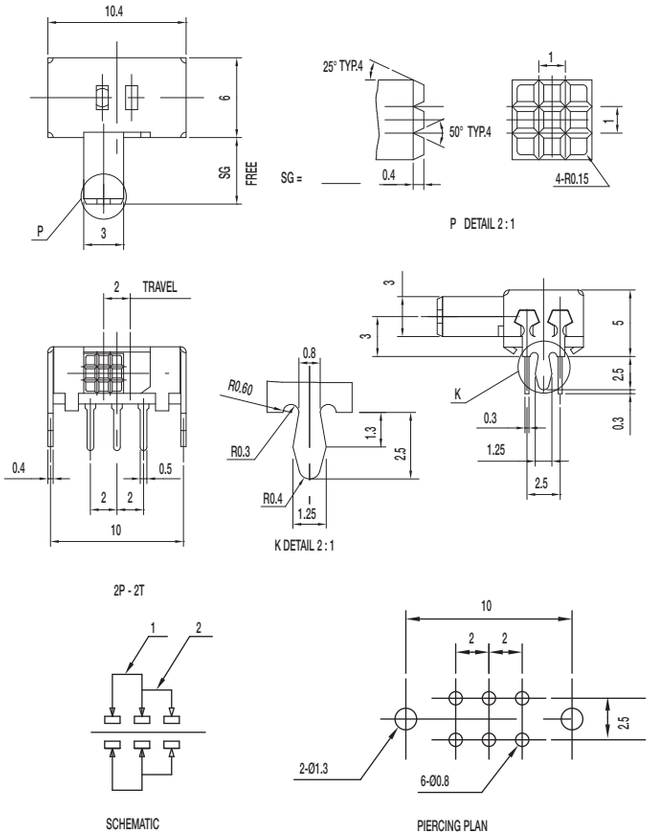

Specifications

CONTACT RATING: 0.3A @ 30 VDC

INITIAL CONTACT RESISTANCE: 30 m ohms max.

INSULATION RESISTANCE: 100 M ohms min.

DIELECTRIC STRENGTH: 500 V AC (50-60 Hz) between open terminals and between the frame and terminal.

OPERATING LIFE: 10,000 cycles with load

OPERATING FORCE: 250 ± 100 gf (2.45 ± 0.98N)

TRAVEL: 2 ± 0.3 mm

OPERATING TEMPERATURE: -20˚C to 70˚C

Materials

KNOB: POM

FRAME: SPCC

CONTACT: Silver clad

TERMINAL: Silver plated

SK-22D05-G NS DPDT NON-SHORTING

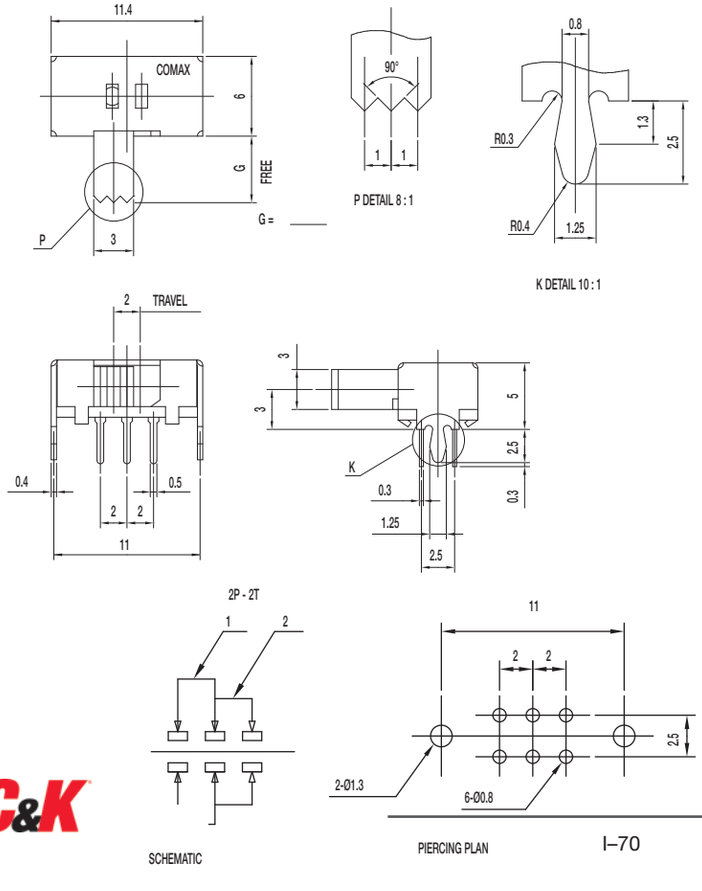

Specifications

CONTACT RATING: 0.3A @ 30 VDC

INITIAL CONTACT RESISTANCE: 30 m ohms max.

INSULATION RESISTANCE: 100 M ohms min.

DIELECTRIC STRENGTH: 500 V AC (50-60 Hz) between open terminals and between the frame and terminal.

OPERATING LIFE: 10,000 cycles with load

OPERATING FORCE: 250 ± 100 gf (2.45 ± 0.98N)

TRAVEL: 2 ± 0.3 mm

OPERATING TEMPERATURE: -20˚C to 70˚C

Materials

KNOB: POM

FRAME: SPCC

CONTACT: Silver clad

TERMINAL: Silver plated

Dimensions are shown:mm
Specifications and dimensions subject to change

SK-22D06-G NS DPDT NON-SHORTING

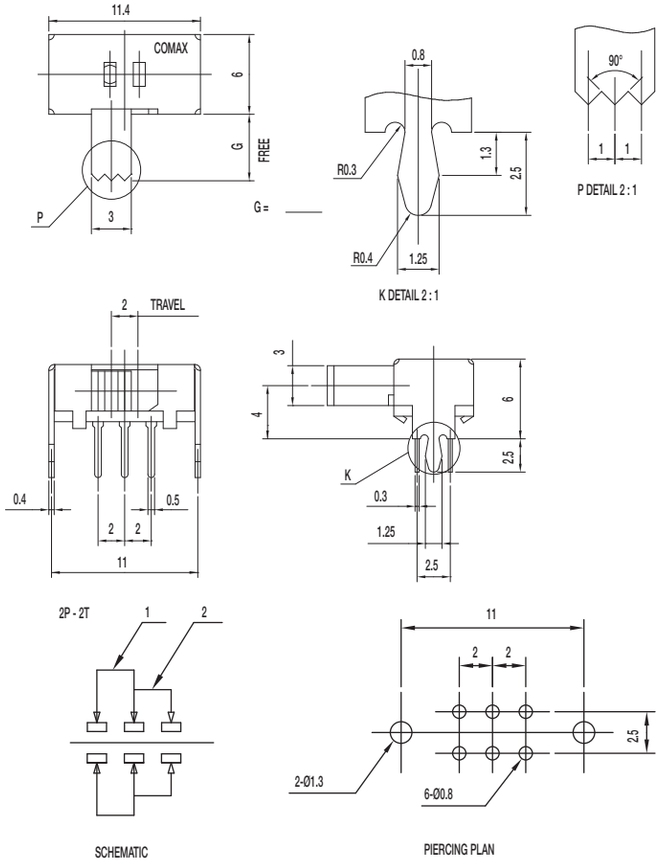

Specifications

CONTACT RATING: 0.3A @ 30 VDC

INITIAL CONTACT RESISTANCE: 30 m ohms max.

INSULATION RESISTANCE: 100 M ohms min.

DIELECTRIC STRENGTH: 500 V AC (50-60 Hz) between open terminals and between the frame and terminal.

OPERATING LIFE: 10,000 cycles with load

OPERATING FORCE: 250 ± 100 gf (2.45 ± 0.98N)

TRAVEL: 2 ± 0.3 mm

OPERATING TEMPERATURE: -20˚C to 70˚C

Materials

KNOB: POM

FRAME: SPCC

CONTACT: Silver clad

TERMINAL: Silver plated

SK-22H06-SG DPDT NON-SHORTING

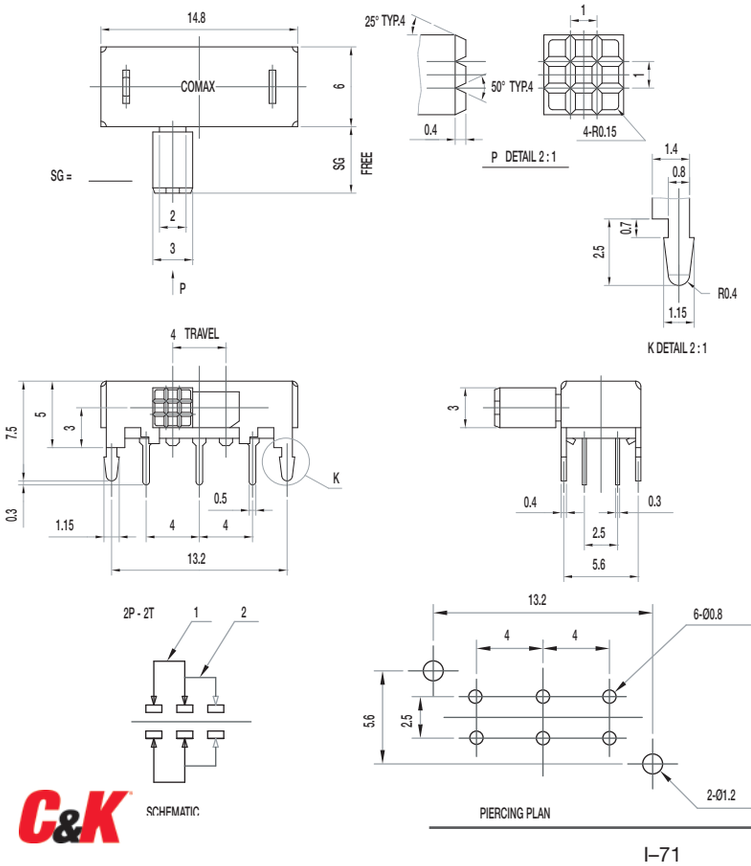

Specifications

CONTACT RATING: 0.3A @ 30 VDC

INITIAL CONTACT RESISTANCE: 30 m ohms max.

INSULATION RESISTANCE: 100 M ohms min.

DIELECTRIC STRENGTH: 500 V AC (50-60 Hz) between open terminals and between the frame and terminal.

OPERATING LIFE: 10,000 cycles with load

OPERATING FORCE: 200 ± 100 gf (1.96 ± 0.98N)

TRAVEL: 4 ± 0.3 mm

OPERATING TEMPERATURE: -20˚C to 70˚C

Materials

KNOB: POM

FRAME: SPCC

CONTACT: Silver clad

TERMINAL: Silver plated

Dimensions are shown: mm
Specifications and dimensions subject to change

SK Series
Miniature Slide Switches

SK-23D05-G 2P3T

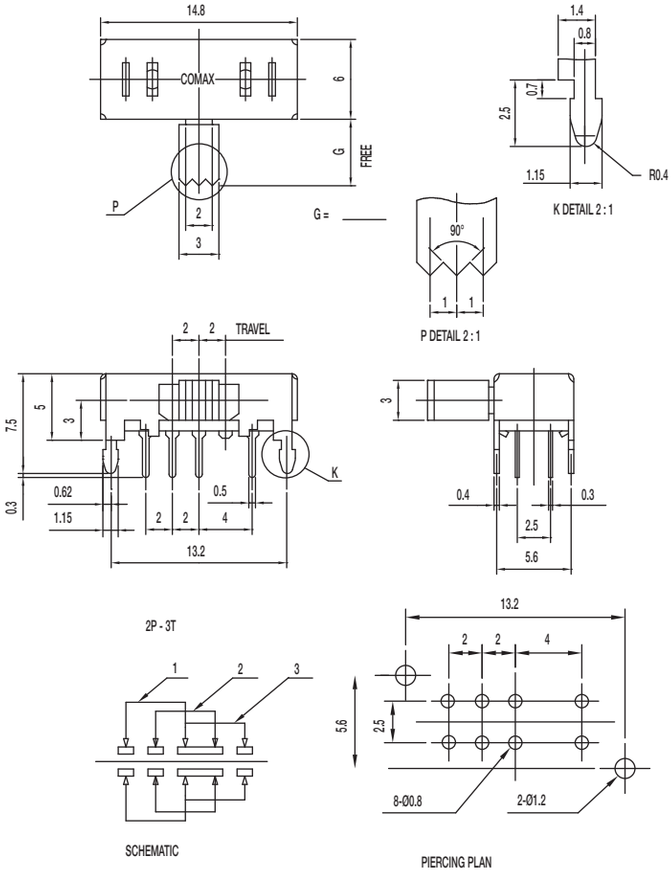

Specifications

CONTACT RATING: 0.3A @ 30 VDC

INITIAL CONTACT RESISTANCE: 30 m ohms max.

INSULATION RESISTANCE: 100 M ohms min.

DIELECTRIC STRENGTH: 500 V AC (50-60 Hz) between open terminals and between the frame and terminal.

OPERATING LIFE: 10,000 cycles with load

OPERATING FORCE: 200 ± 100 gf (1.96 ± 0.98N)
250 ± 100 gf (2.45 ± 0.98N)

TRAVEL: 2 ± 0.3 mm

OPERATING TEMPERATURE: -20˚C to 70˚C

Materials

KNOB: POM

FRAME: SPCC

CONTACT: Silver clad

TERMINAL: Silver plated

SK-42D05-SG NS 4P2T NON-SHORTING

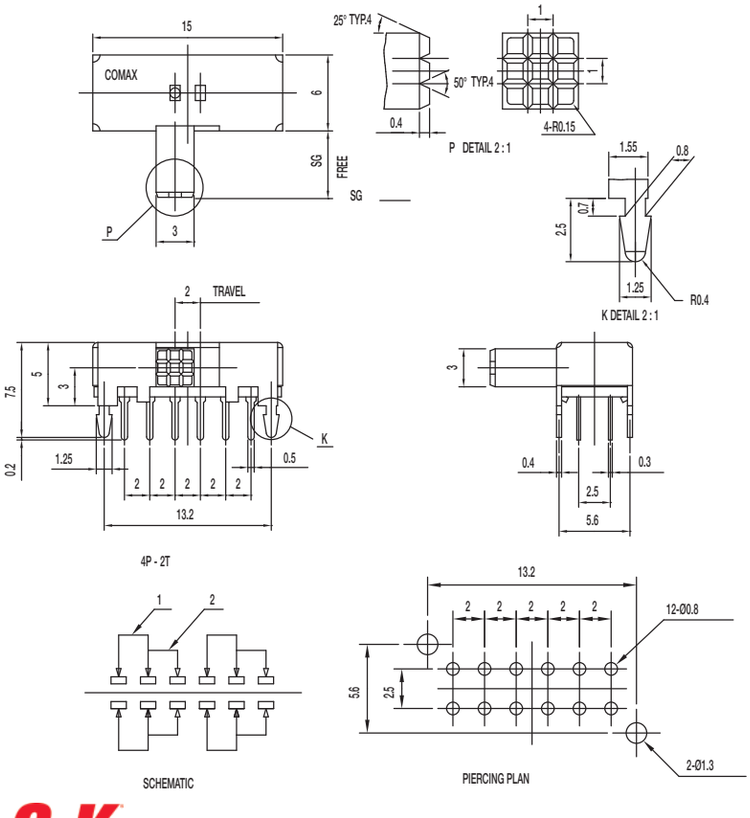

Specifications

CONTACT RATING: 0.3A @ 30 VDC

INITIAL CONTACT RESISTANCE: 30 m ohms max.

INSULATION RESISTANCE: 100 M ohms min.

DIELECTRIC STRENGTH: 500 V AC (50-60 Hz) between open terminals and between the frame and terminal.

OPERATING LIFE: 10,000 cycles with load

OPERATING FORCE: 250 ± 100 gf (2.45 ± 0.98N)

TRAVEL: 2 ± 0.3 mm

OPERATING TEMPERATURE: -20˚C to 70˚C

Materials

KNOB: POM

FRAME: SPCC

CONTACT: Silver clad

TERMINAL: Silver plated

Dimensions are shown: mm
Specifications and dimensions subject to change

SK-43D05-SG 4P3T

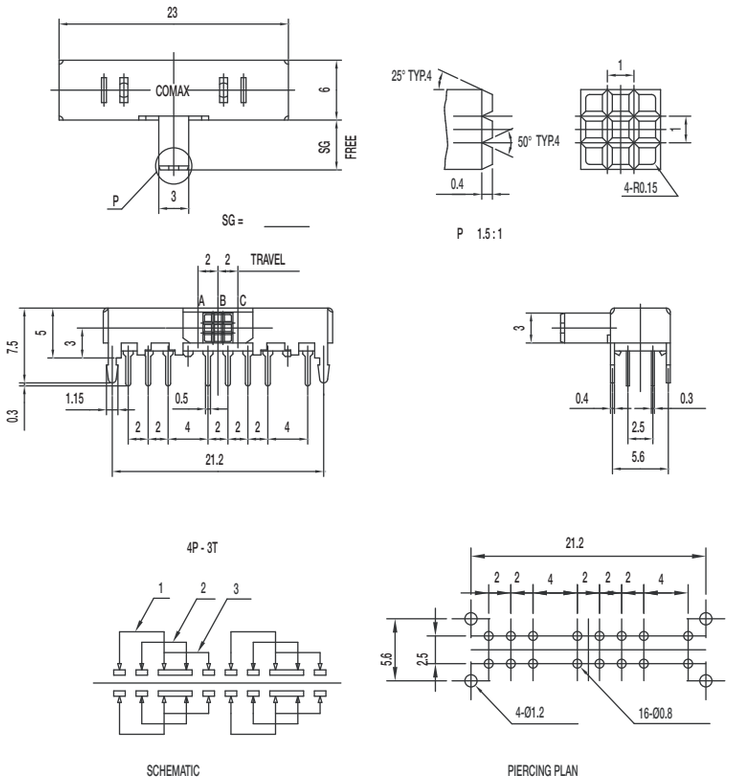

Specifications

CONTACT RATING: 0.3A @ 30 VDC
INITIAL CONTACT RESISTANCE: 30 m ohms max.
INSULATION RESISTANCE: 100 M ohms min.
DIELECTRIC STRENGTH: 500 V AC (50-60 Hz) between open terminals and between the frame and terminal.
OPERATING LIFE: 10,000 cycles with load
OPERATING FORCE: 200 ± 100 gf (1.96 ± 0.98N)
300 ± 100 gf (2.94 ± 0.98N)
TRAVEL: 2 ± 0.3 mm
OPERATING TEMPERATURE: -20˚C to 70˚C

Materials

KNOB: POM
FRAME: SPCC
CONTACT: Silver clad
TERMINAL: Silver plated

SK-42H03-G 4P2T NON-SHORTING

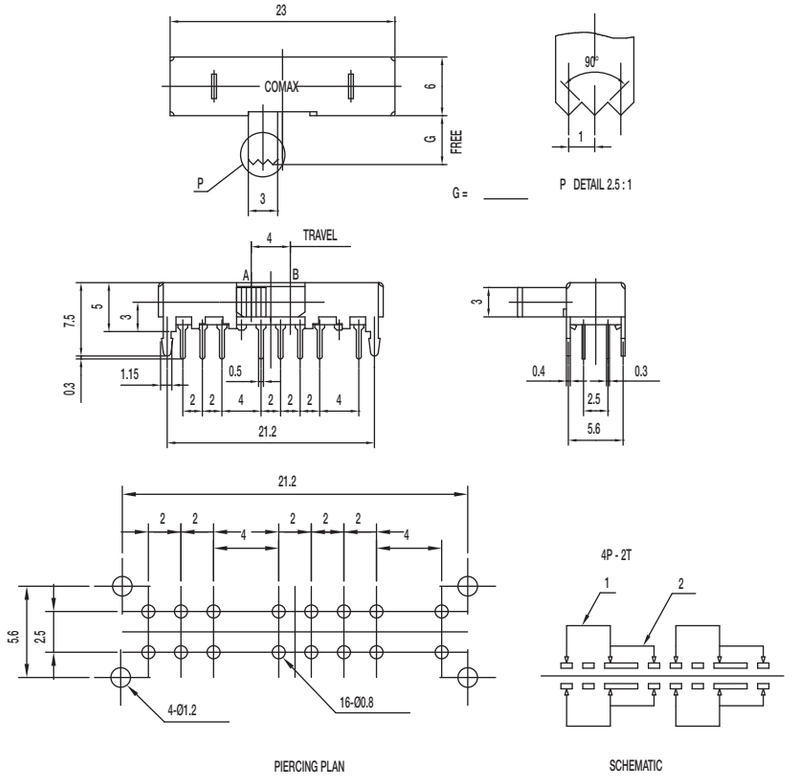

Specifications

CONTACT RATING: 0.3A @ 30 VDC
INITIAL CONTACT RESISTANCE: 30 m ohms max.
INSULATION RESISTANCE: 100 M ohms min.
DIELECTRIC STRENGTH: 500 V AC (50-60 Hz) between open terminals and between the frame and terminal.
OPERATING LIFE: 10,000 cycles with load
OPERATING FORCE: 200 ± 100 gf (1.96 ± 0.98N)
TRAVEL: 4 ± 0.3 mm
OPERATING TEMPERATURE: -20˚C to 70˚C

Materials

KNOB: POM
FRAME: SPCC
CONTACT: Silver clad
TERMINAL: Silver plated

SK Series
Miniature Slide Switches

SK-22D28-G NS DPDT NON-SHORTING

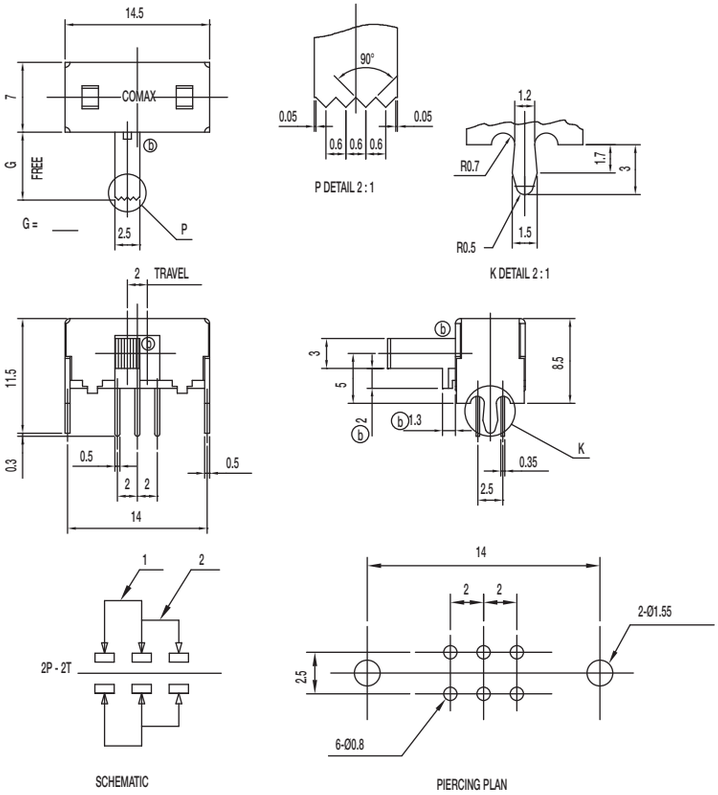

Specifications

CONTACT RATING: 0.3A @ 30 VDC

INITIAL CONTACT RESISTANCE: 30 m ohms max.

INSULATION RESISTANCE: 100 M ohms min.

DIELECTRIC STRENGTH: 500 V AC (50-60 Hz) between open terminals and between the frame and terminal.

OPERATING LIFE: 10,000 cycles with load

OPERATING FORCE: 200 ± 100 gf (1.96 ± 0.98N)

TRAVEL: 2 ± 0.3 mm

OPERATING TEMPERATURE: -20˚C to 70˚C

Materials

KNOB: POM

FRAME: SPCC

CONTACT: Silver clad

TERMINAL: Silver plated

SK-23D28-G NS 2P3T NON-SHORTING

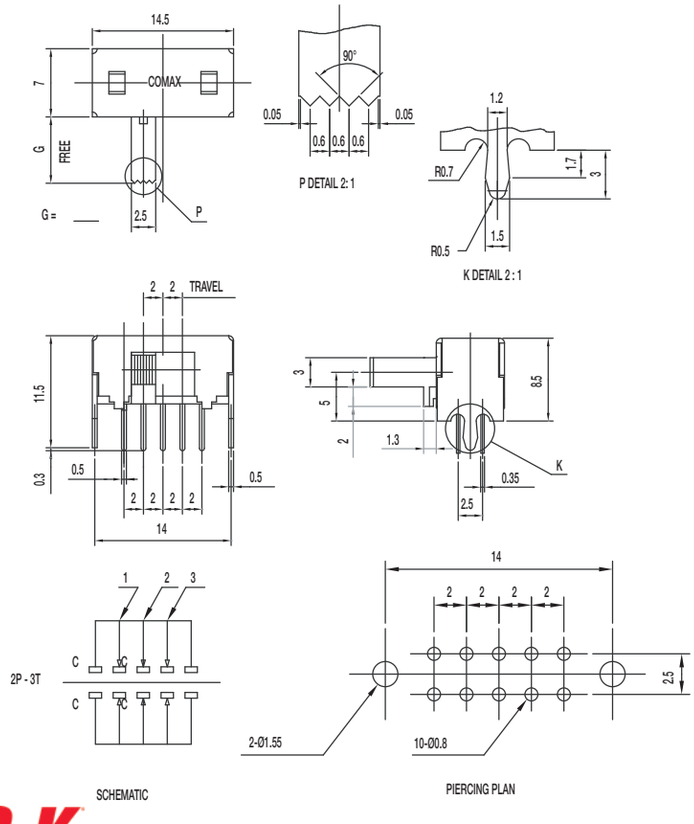

Specifications

CONTACT RATING: 0.3A @ 30 VDC

INITIAL CONTACT RESISTANCE: 30 m ohms max.

INSULATION RESISTANCE: 100 M ohms min.

DIELECTRIC STRENGTH: 500 V AC (50-60 Hz) between open terminals and between the frame and terminal.

OPERATING LIFE: 10,000 cycles with load

OPERATING FORCE: 200 ± 100 gf (1.96 ± 0.98N)
300 ± 150 gf (2.94 ± 1.47N)

TRAVEL: 2 ± 0.3 mm

OPERATING TEMPERATURE: -20˚C to 70˚C

Materials

KNOB: POM

FRAME: SPCC

CONTACT: Silver clad

TERMINAL: Silver plated

Dimensions are shown: mm
Specifications and dimensions subject to change

SK-24D18-DG NS 2P4T NON-SHORTING

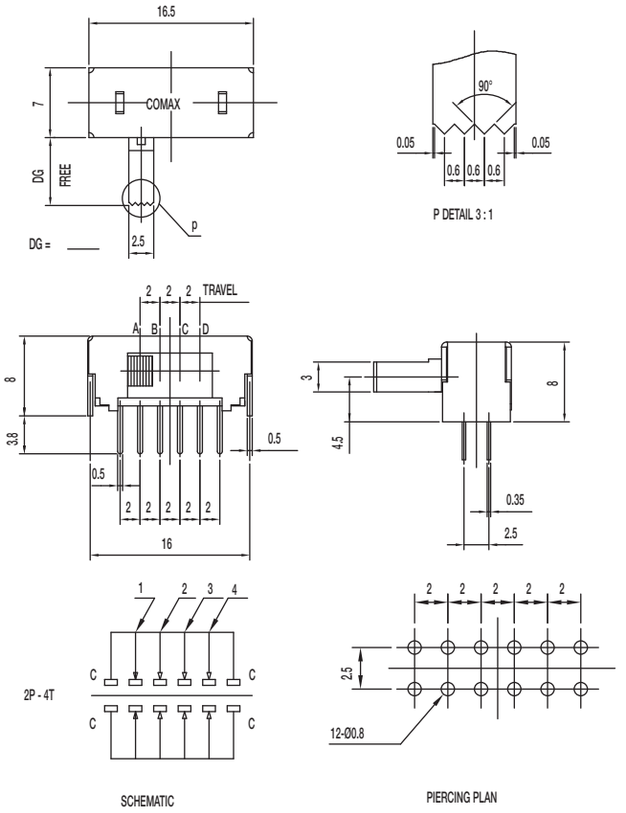

Specifications

CONTACT RATING: 0.3A @ 30 VDC
INITIAL CONTACT RESISTANCE: 30 m ohms max.
INSULATION RESISTANCE: 100 M ohms min.
DIELECTRIC STRENGTH: 500 V AC (50-60 Hz) between open terminals and between the frame and terminal.
OPERATING LIFE: 10,000 cycles with load
OPERATING FORCE: 200 ± 100 gf (1.96 ± 0.98N)
250 ± 100 gf (2.45 ± 0.98N); 300 ± 150 gf (2.94 ± 1.47N)
TRAVEL: 2 ± 0.3 mm
OPERATING TEMPERATURE: -20˚C to 70˚C

Materials

KNOB: POM
FRAME: SPCC
CONTACT: Silver clad
TERMINAL: Silver plated

SK-24D28-G NS 2P4T NON-SHORTING

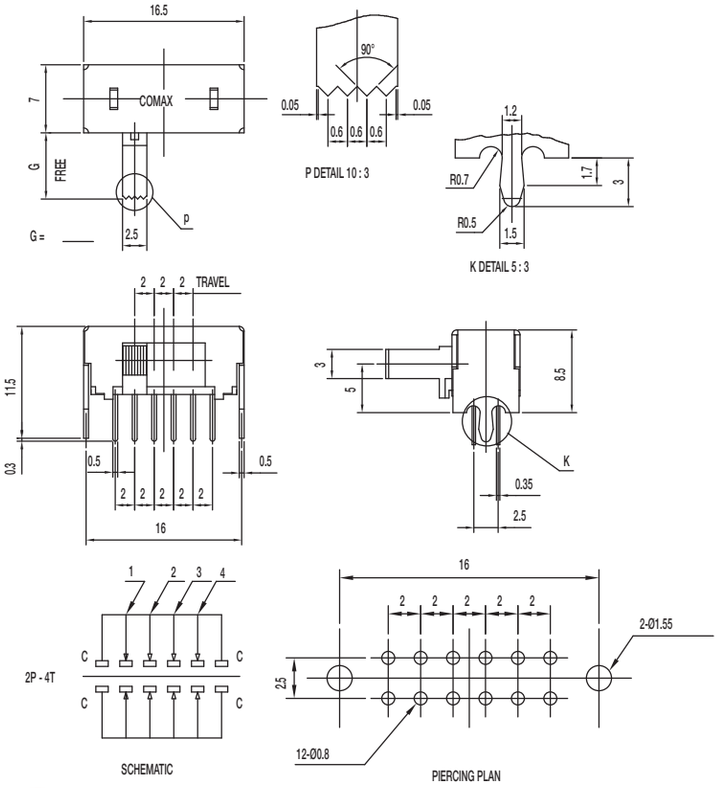

Specifications

CONTACT RATING: 0.3A @ 30 VDC
INITIAL CONTACT RESISTANCE: 30 m ohms max.
INSULATION RESISTANCE: 100 M ohms min.
DIELECTRIC STRENGTH: 500 V AC (50-60 Hz) between open terminals and between the frame and terminal.
OPERATING LIFE: 10,000 cycles with load
OPERATING FORCE: 200 ± 100 gf (1.96 ± 0.98N)
250 ± 100 gf (2.45 ± 0.98N); 300 ± 150 gf (2.94 ± 1.47N)
TRAVEL: 2 ± 0.3 mm
OPERATING TEMPERATURE: -20˚C to 70˚C

Materials

KNOB: POM
FRAME: SPCC
CONTACT: Silver clad
TERMINAL: Silver plated

Dimensions are shown: mm
Specifications and dimensions subject to change

SK Series
Miniature Slide Switches

SK-42D28-G NS 4P2T NON-SHORTING

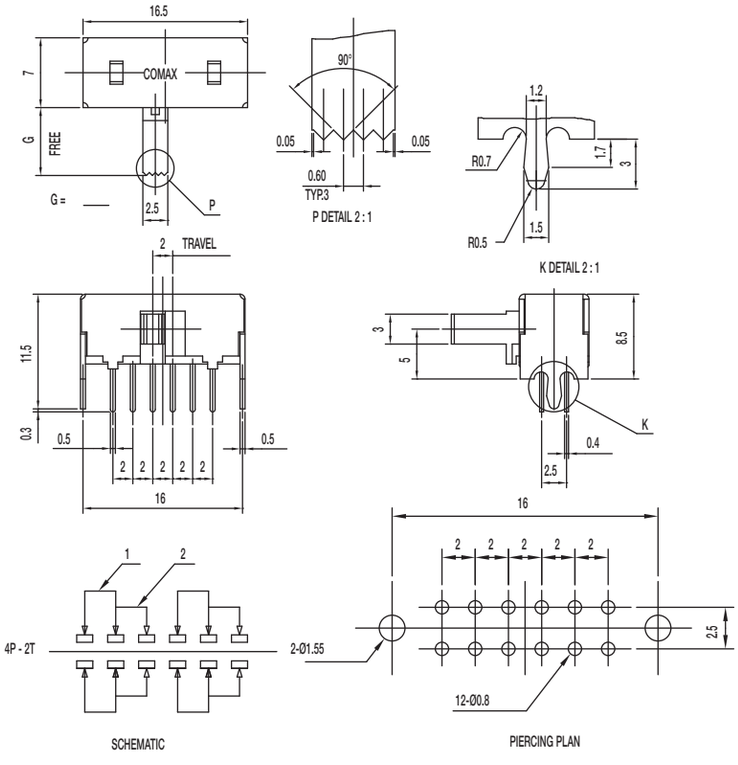

Specifications

CONTACT RATING: 0.3A @ 30 VDC
INITIAL CONTACT RESISTANCE: 30 m ohms max.
INSULATION RESISTANCE: 100 M ohms min.
DIELECTRIC STRENGTH: 500 V AC (50-60 Hz) between open terminals and between the frame and terminal.
OPERATING LIFE: 10,000 cycles with load
OPERATING FORCE: 200 ± 100 gf (1.96 ± 0.98N)
TRAVEL: 2 ± 0.3 mm
OPERATING TEMPERATURE: -20˚C to 70˚C

Materials

KNOB: POM
FRAME: SPCC
CONTACT: Silver clad
TERMINAL: Silver plated

SK-43D28-G NS 4P3T NON-SHORTING

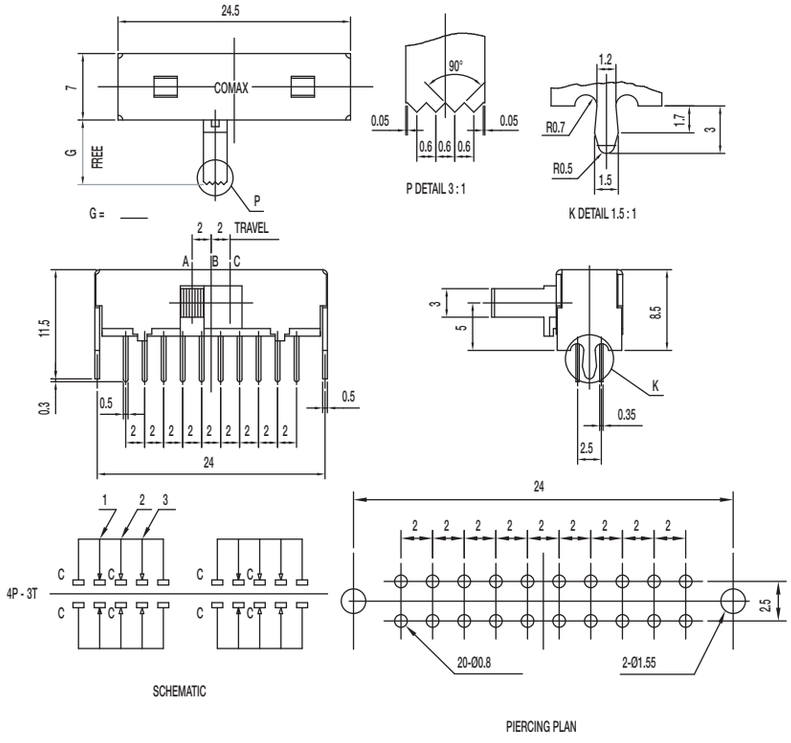

Specifications

CONTACT RATING: 0.3A @ 30 VDC
INITIAL CONTACT RESISTANCE: 30 m ohms max.
INSULATION RESISTANCE: 100 M ohms min.
DIELECTRIC STRENGTH: 500 V AC (50-60 Hz) between open terminals and between the frame and terminal.
OPERATING LIFE: 10,000 cycles with load
OPERATING FORCE: 200 ± 100 gf (1.96 ± 0.98N)
300 ± 150 gf (2.94 ± 1.47N)
TRAVEL: 2 ± 0.3 mm
OPERATING TEMPERATURE: -20˚C to 70˚C

Materials

KNOB: POM
FRAME: SPCC
CONTACT: Silver clad
TERMINAL: Silver plated

SK-12F28-G NS 1P2T NON-SHORTING

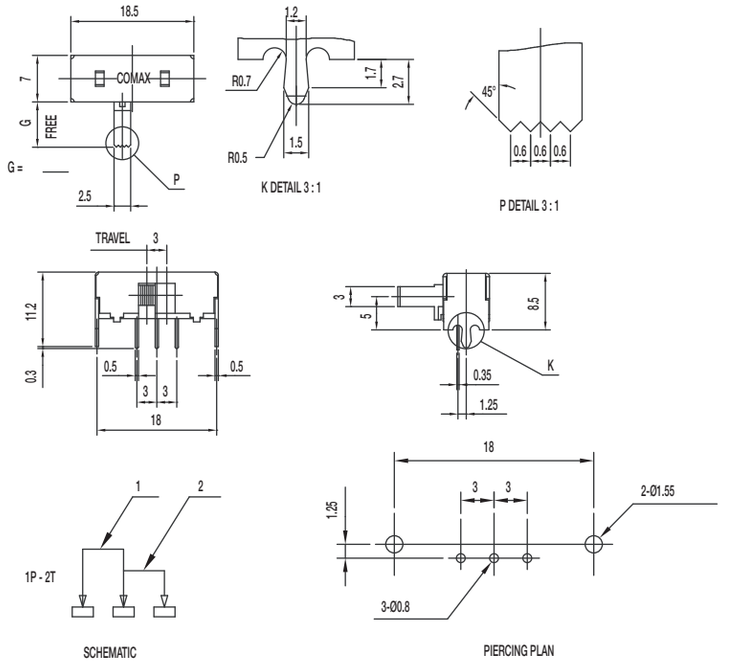

Specifications

CONTACT RATING: 0.3A @ 30 VDC

INITIAL CONTACT RESISTANCE: 30 m ohms max.

INSULATION RESISTANCE: 100 M ohms min.

DIELECTRIC STRENGTH: 500 V AC (50-60 Hz) between open terminals and between the frame and terminal.

OPERATING LIFE: 10,000 cycles with load

OPERATING FORCE: 200 ± 100 gf (1.96 ± 0.98N)

TRAVEL: 3 ± 0.3 mm

OPERATING TEMPERATURE: -20˚C to 70˚C

Materials

KNOB: POM

FRAME: SPCC

CONTACT: Silver clad

TERMINAL: Silver plated

SK-22F28-G NS DPDT NON-SHORTING

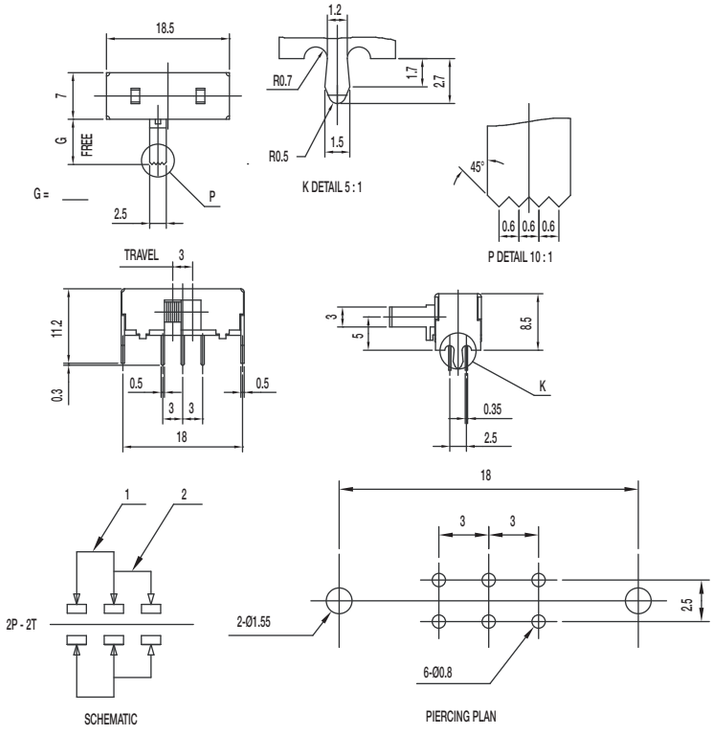

Specifications

CONTACT RATING: 0.3A @ 30 VDC

INITIAL CONTACT RESISTANCE: 30 m ohms max.

INSULATION RESISTANCE: 100 M ohms min.

DIELECTRIC STRENGTH: 500 V AC (50-60 Hz) between open terminals and between the frame and terminal.

OPERATING LIFE: 10,000 cycles with load

OPERATING FORCE: 200 ± 100 gf (1.96 ± 0.98N)

TRAVEL: 3 ± 0.3 mm

OPERATING TEMPERATURE: -20˚C to 70˚C

Materials

KNOB: POM

FRAME: SPCC

CONTACT: Silver clad

TERMINAL: Silver plated

SK Series
Miniature Slide Switches

SK-23F28-G NS 2P3T NON-SHORTING

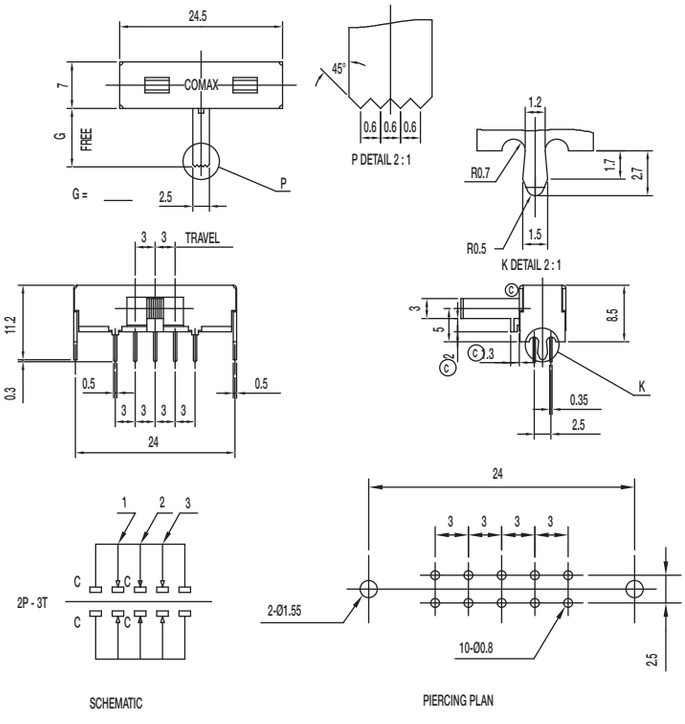

Specifications

CONTACT RATING: 0.3A @ 30 VDC

INITIAL CONTACT RESISTANCE: 30 m ohms max.

INSULATION RESISTANCE: 100 M ohms min.

DIELECTRIC STRENGTH: 500 V AC (50-60 Hz) between open terminals and between the frame and terminal.

OPERATING LIFE: 10,000 cycles with load

OPERATING FORCE: 150 ± 80 gf (1.47 ± 0.78N)
200 ± 100 gf (1.96 ± 0.98N)

TRAVEL: 3 ± 0.3 mm

OPERATING TEMPERATURE: -20˚C to 70˚C

Materials

KNOB: POM

FRAME: SPCC

CONTACT: Silver clad

TERMINAL: Silver plated

SK-24F28-G NS 2P4T NON-SHORTING

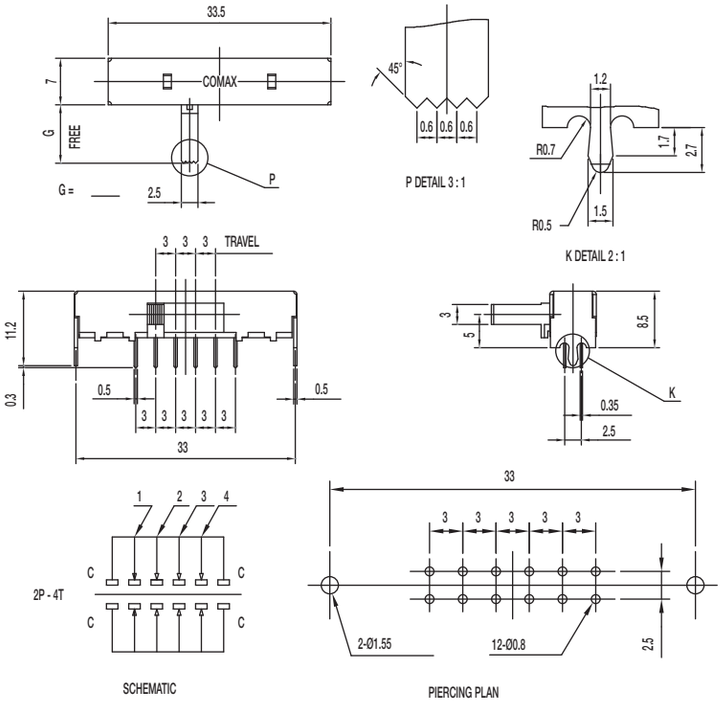

Specifications

CONTACT RATING: 0.3A @ 30 VDC

INITIAL CONTACT RESISTANCE: 30 m ohms max.

INSULATION RESISTANCE: 100 M ohms min.

DIELECTRIC STRENGTH: 500 V AC (50-60 Hz) between open terminals and between the frame and terminal.

OPERATING LIFE: 10,000 cycles with load

OPERATING FORCE: 200 ± 100 gf (1.96 ± 0.98N)
250 ± 100 gf (2.45 ± 0.98N)

TRAVEL: 3 ± 0.3 mm

OPERATING TEMPERATURE: -20˚C to 70˚C

Materials

KNOB: POM

FRAME: SPCC

CONTACT: Silver clad

TERMINAL: Silver plated

SK-42F28-G NS 2P4T NON-SHORTING

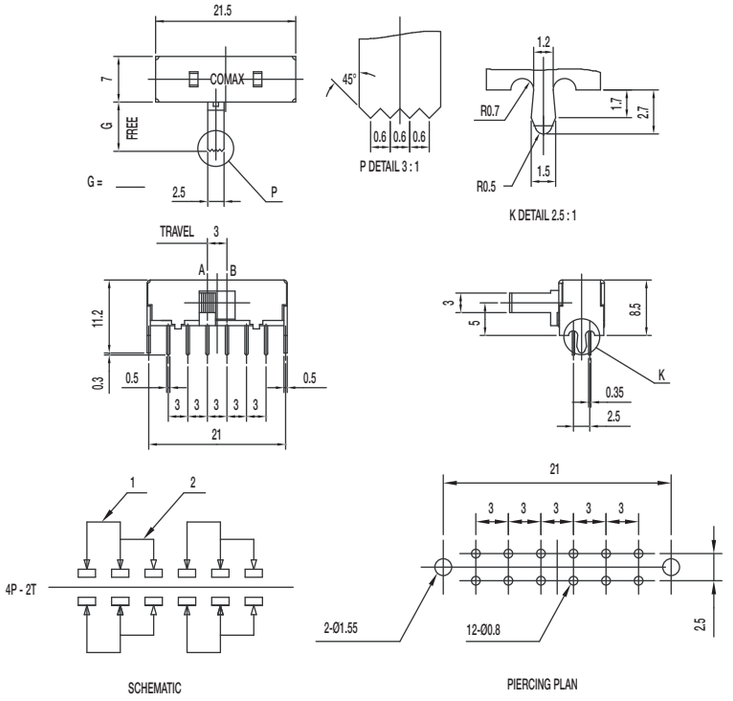

Specifications

CONTACT RATING: 0.3A @ 30 VDC

INITIAL CONTACT RESISTANCE: 30 m ohms max.

INSULATION RESISTANCE: 100 M ohms min.

DIELECTRIC STRENGTH: 500 V AC (50-60 Hz) between open terminals and between the frame and terminal.

OPERATING LIFE: 10,000 cycles with load

OPERATING FORCE: 200 ± 100 gf (1.96 ± 0.98N)
250 ± 100 gf (2.45 ± 0.98N)

TRAVEL: 3 ± 0.3 mm

OPERATING TEMPERATURE: -20˚C to 70˚C

Materials

KNOB: POM

FRAME: SPCC

CONTACT: Silver clad

TERMINAL: Silver plated

SK-12H04-G NS 1P2T NON-SHORTING

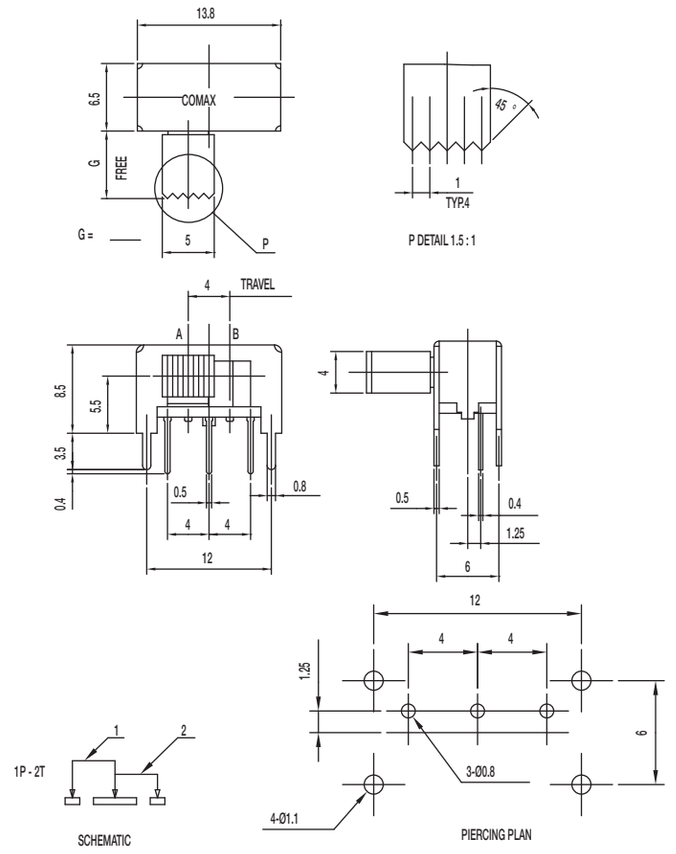

Specifications

CONTACT RATING: 0.3A @ 30 VDC

INITIAL CONTACT RESISTANCE: 30 m ohms max.

INSULATION RESISTANCE: 100 M ohms min.

DIELECTRIC STRENGTH: 500 V AC (50-60 Hz) between open terminals and between the frame and terminal.

OPERATING LIFE: 10,000 cycles with load

OPERATING FORCE: 250 ± 100 gf (2.45 ± 0.98N)

TRAVEL: 4 ± 0.3 mm

OPERATING TEMPERATURE: -20˚C to 70˚C

Materials

KNOB: POM

FRAME: SPCC

CONTACT: Silver clad

TERMINAL: Silver plated

SK Series
Miniature Slide Switches

SK-22H04-G NS DPDT NON-SHORTING

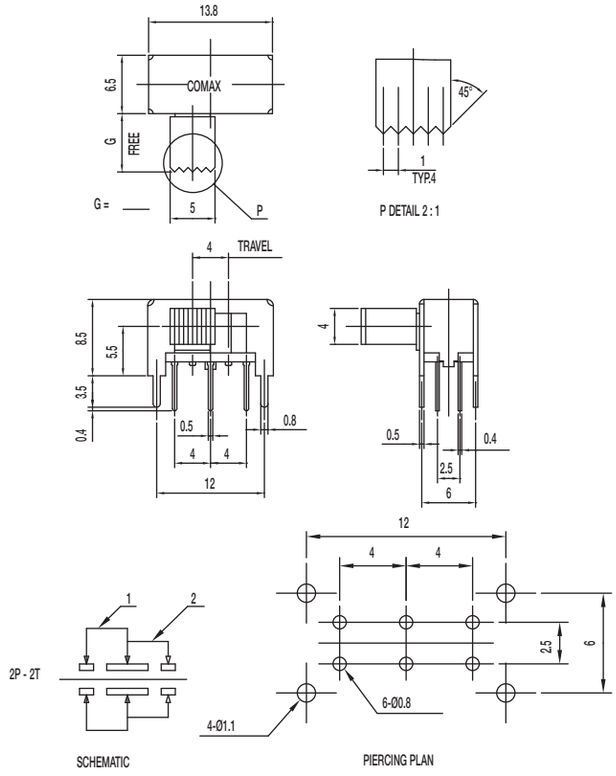

Specifications

CONTACT RATING: 0.3A @ 30 VDC

INITIAL CONTACT RESISTANCE: 30 m ohms max.

INSULATION RESISTANCE: 100 M ohms min.

DIELECTRIC STRENGTH: 500 V AC (50-60 Hz) between open terminals and between the frame and terminal.

OPERATING LIFE: 10,000 cycles with load

OPERATING FORCE: 250 ± 100 gf (2.45 ± 0.98N)

TRAVEL: 4 ± 0.3 mm

OPERATING TEMPERATURE: -20˚C to 70˚C

Materials

KNOB: POM

FRAME: SPCC

CONTACT: Silver clad

TERMINAL: Silver plated

SK-22H24-G NS DPDT NON-SHORTING

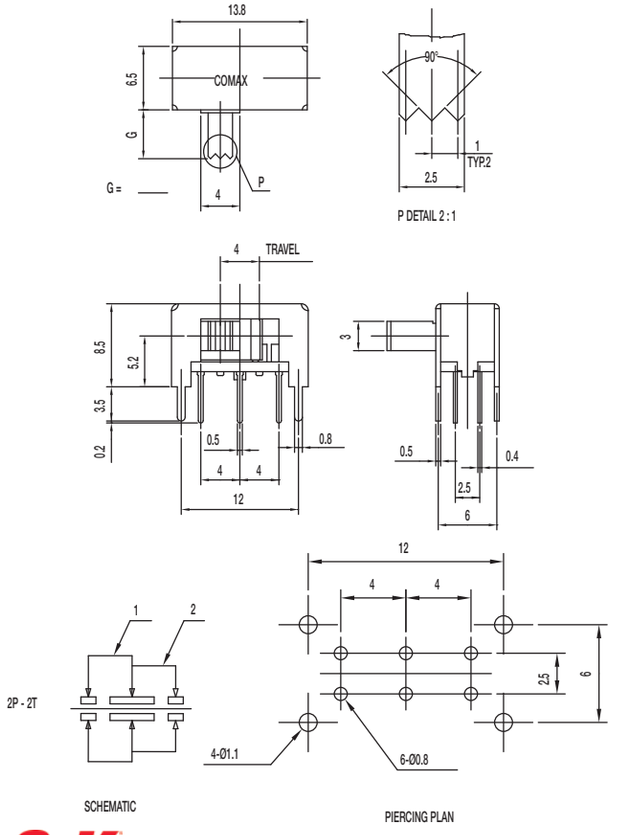

Specifications

CONTACT RATING: 0.3A @ 30 VDC

INITIAL CONTACT RESISTANCE: 30 m ohms max.

INSULATION RESISTANCE: 100 M ohms min.

DIELECTRIC STRENGTH: 500 V AC (50-60 Hz) between open terminals and between the frame and terminal.

OPERATING LIFE: 10,000 cycles with load

OPERATING FORCE: 250 ± 100 gf (2.45 ± 0.98N)

TRAVEL: 4 ± 0.3 mm

OPERATING TEMPERATURE: -20˚C to 70˚C

Materials

KNOB: POM

FRAME: SPCC

CONTACT: Silver clad

TERMINAL: Silver plated

Dimensions are shown: mm
Specifications and dimensions subject to change

SK-22H44-G NS DPDT NON-SHORTING

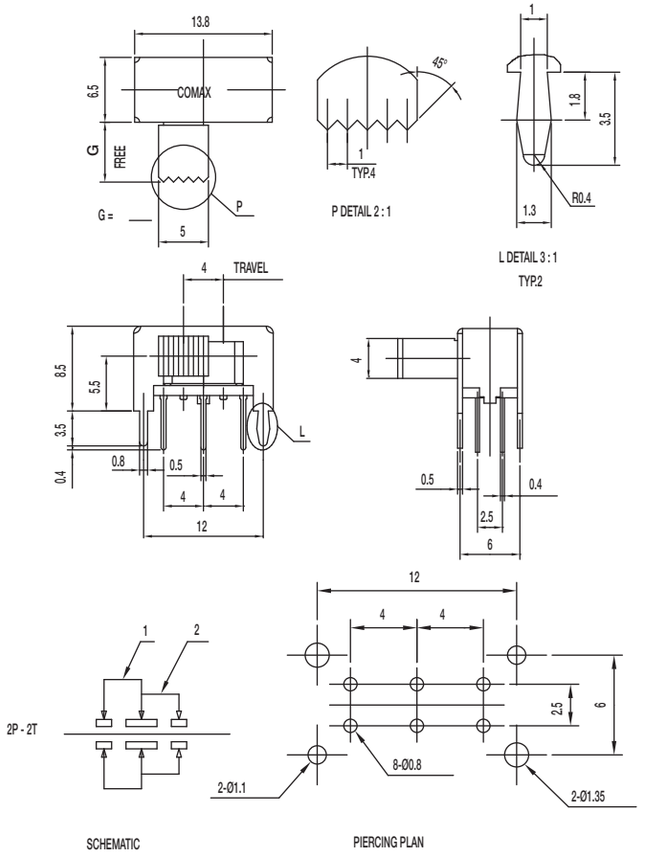

Specifications

CONTACT RATING: 0.3A @ 30 VDC

INITIAL CONTACT RESISTANCE: 30 m ohms max.

INSULATION RESISTANCE: 100 M ohms min.

DIELECTRIC STRENGTH: 500 V AC (50-60 Hz) between open terminals and between the frame and terminal.

OPERATING LIFE: 10,000 cycles with load

OPERATING FORCE: 250 ± 150 gf (2.45 ± 1.47N)

TRAVEL: 4 ± 0.3 mm

OPERATING TEMPERATURE: -20˚C to 70˚C

Materials

KNOB: POM

FRAME: SPCC

CONTACT: Silver clad

TERMINAL: Silver plated

SK-23D04-G 2P3T

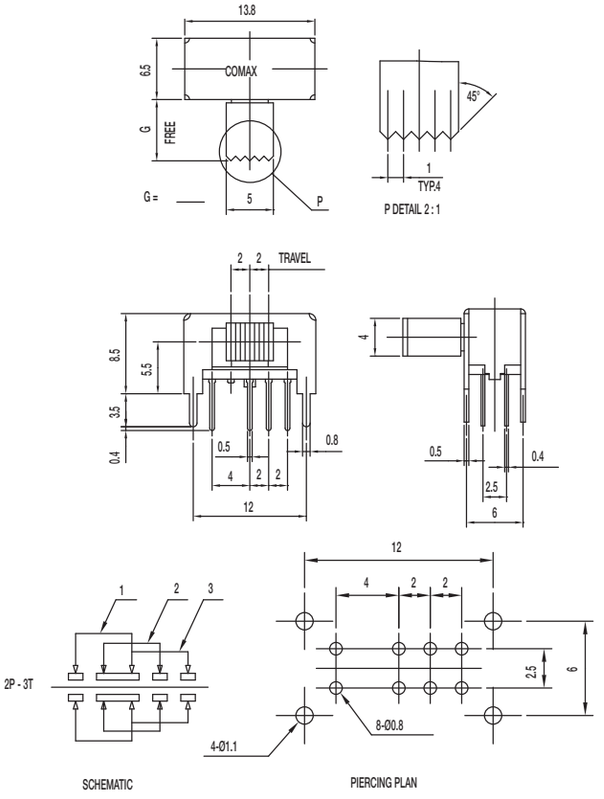

Specifications

CONTACT RATING: 0.3A @ 30 VDC

INITIAL CONTACT RESISTANCE: 30 m ohms max.

INSULATION RESISTANCE: 100 M ohms min.

DIELECTRIC STRENGTH: 500 V AC (50-60 Hz) between open terminals and between the frame and terminal.

OPERATING LIFE: 10,000 cycles with load

OPERATING FORCE: 200 ± 100 gf (1.96 ± 0.98N)
300 ± 150 gf (2.94 ± 1.47N)

TRAVEL: 2 ± 0.3 mm

OPERATING TEMPERATURE: -20˚C to 70˚C

Materials

KNOB: POM

FRAME: SPCC

CONTACT: Silver clad

TERMINAL: Silver plated

Dimensions are shown: mm
Specifications and dimensions subject to change

SK Series
Miniature Slide Switches

SK-23D23-G NS 2P3T NON-SHORTING

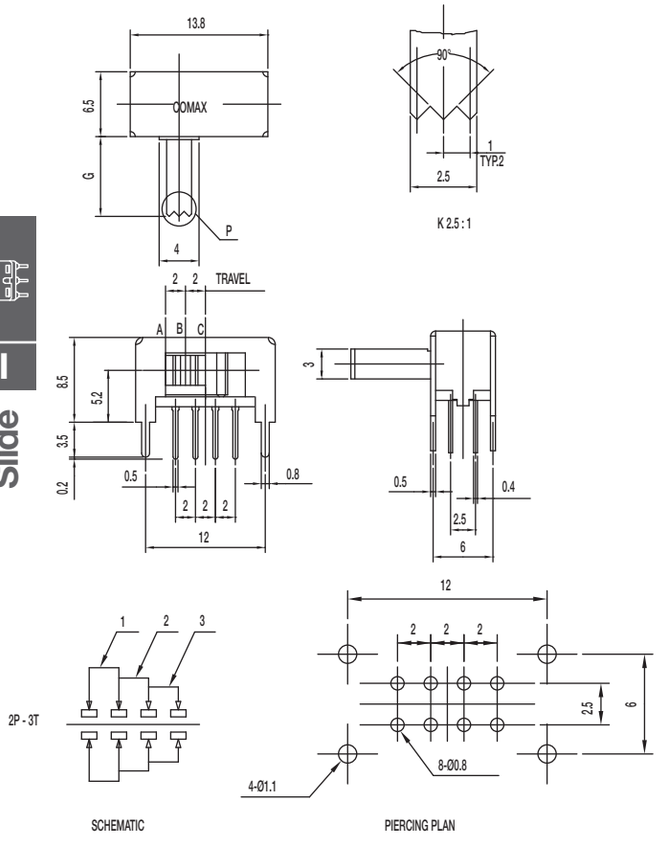

Specifications

CONTACT RATING: 0.3A @ 30 VDC

INITIAL CONTACT RESISTANCE: 30 m ohms max.

INSULATION RESISTANCE: 100 M ohms min.

DIELECTRIC STRENGTH: 500 V AC (50-60 Hz) between open terminals and between the frame and terminal.

OPERATING LIFE: 10,000 cycles with load

OPERATING FORCE: 200 ± 100 gf (1.96 ± 0.98N)
300 ± 150 gf (2.94 ± 1.47N)

TRAVEL: 2 ± 0.3 mm

OPERATING TEMPERATURE: -20˚C to 70˚C

Materials

KNOB: POM

FRAME: SPCC

CONTACT: Silver clad

TERMINAL: Silver plated

SK-23D24-G 2P3T

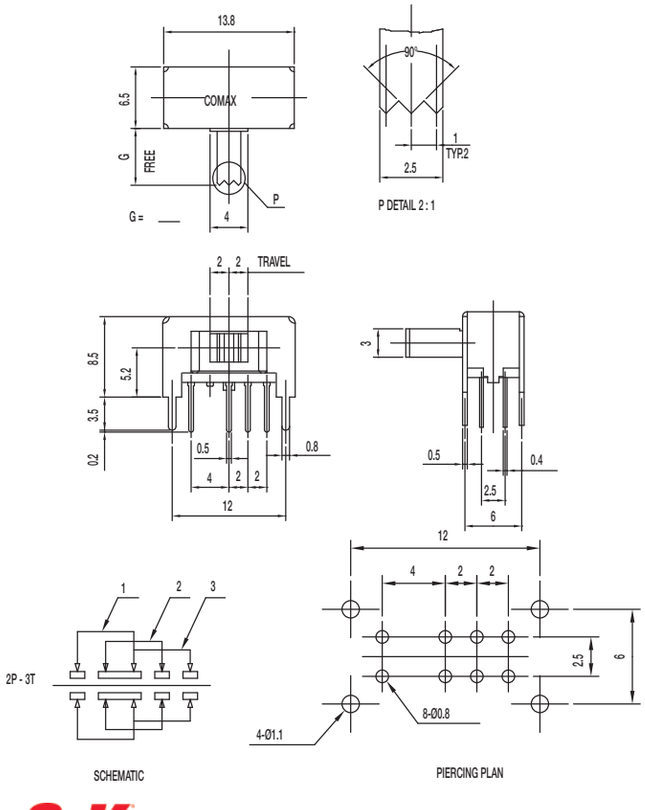

Specifications

CONTACT RATING: 0.3A @ 30 VDC

INITIAL CONTACT RESISTANCE: 30 m ohms max.

INSULATION RESISTANCE: 100 M ohms min.

DIELECTRIC STRENGTH: 500 V AC (50-60 Hz) between open terminals and between the frame and terminal.

OPERATING LIFE: 10,000 cycles with load

OPERATING FORCE: 200 ± 100 gf (1.96 ± 0.98N)
300 ± 150 gf (2.94 ± 1.47N)

TRAVEL: 2 ± 0.3 mm

OPERATING TEMPERATURE: -20˚C to 70˚C

Materials

KNOB: POM

FRAME: SPCC

CONTACT: Silver clad

TERMINAL: Silver plated

SK-23D44-G K 2P3T NON-SHORTING AND SHORTING

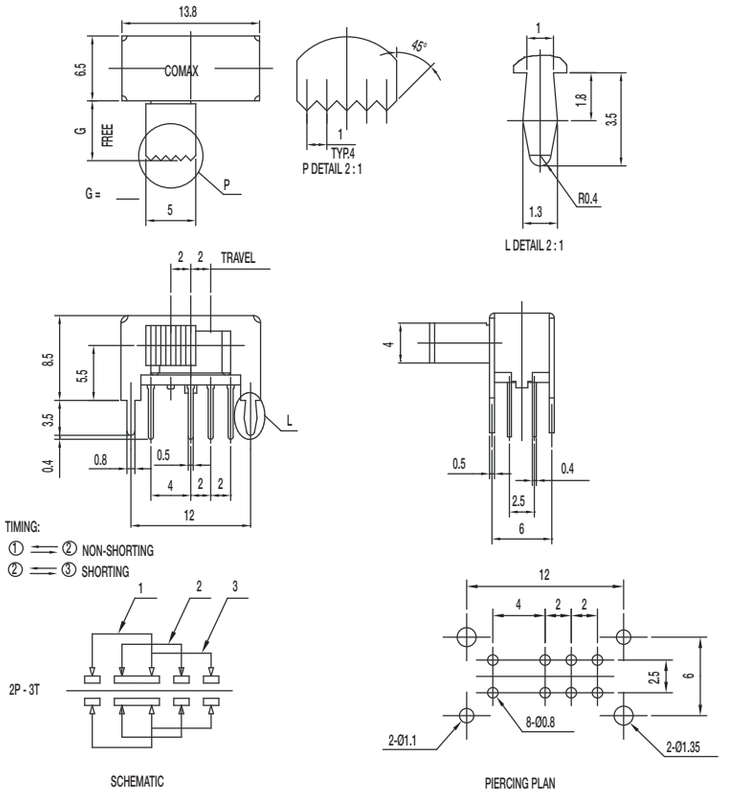

Specifications

CONTACT RATING: 0.3A @ 30 VDC
INITIAL CONTACT RESISTANCE: 30 m ohms max.
INSULATION RESISTANCE: 100 M ohms min.
DIELECTRIC STRENGTH: 500 V AC (50-60 Hz) between open terminals and between the frame and terminal.
OPERATING LIFE: 10,000 cycles with load
OPERATING FORCE: 250 ± 150 gf (2.45 ± 1.47N)
300 ± 150 gf (2.94 ± 1.47N)
TRAVEL: 2 ± 0.3 mm
OPERATING TEMPERATURE: -20˚C to 70˚C

Materials

KNOB: POM
FRAME: SPCC
CONTACT: Silver clad
TERMINAL: Silver plated

SK-24D04-G 2P4T

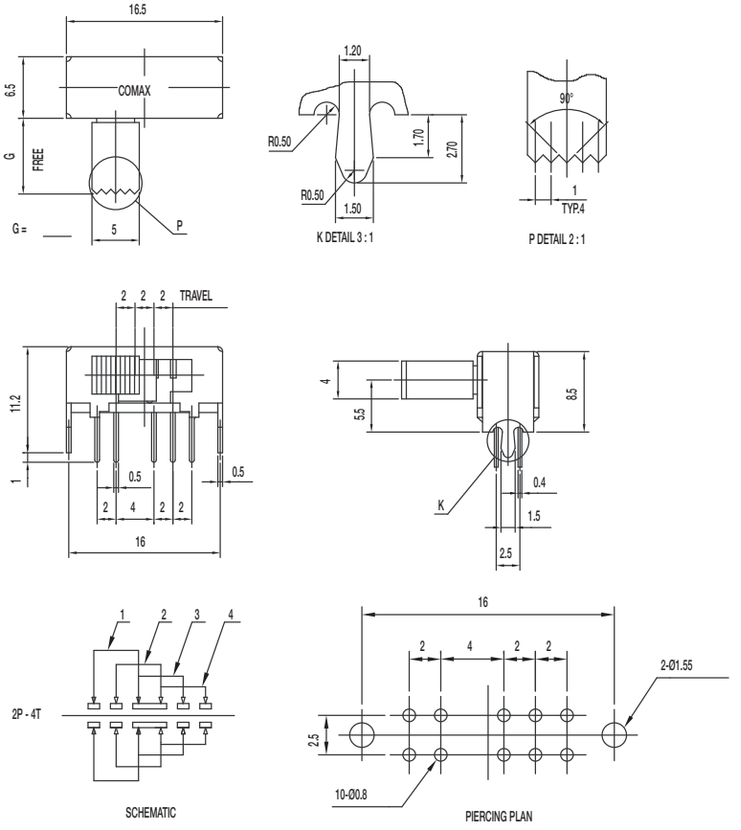

Specifications

CONTACT RATING: 0.3A @ 30 VDC
INITIAL CONTACT RESISTANCE: 30 m ohms max.
INSULATION RESISTANCE: 100 M ohms min.
DIELECTRIC STRENGTH: 500 V AC (50-60 Hz) between open terminals and between the frame and terminal.
OPERATING LIFE: 10,000 cycles with load
OPERATING FORCE: 200 ± 100 gf (1.96 ± 0.98N
250 ± 150 gf (2.45 ± 1.47N); 300 ± 150 gf (2.94 ± 1.47N)
TRAVEL: 2 ± 0.3 mm
OPERATING TEMPERATURE: -20˚C to 70˚C

Materials

KNOB: POM
FRAME: SPCC
CONTACT: Silver clad
TERMINAL: Silver plated

Dimensions are shown: mm
Specifications and dimensions subject to change

SK Series
Miniature Slide Switches

SK-24D24 1P3T NON-SHORTING

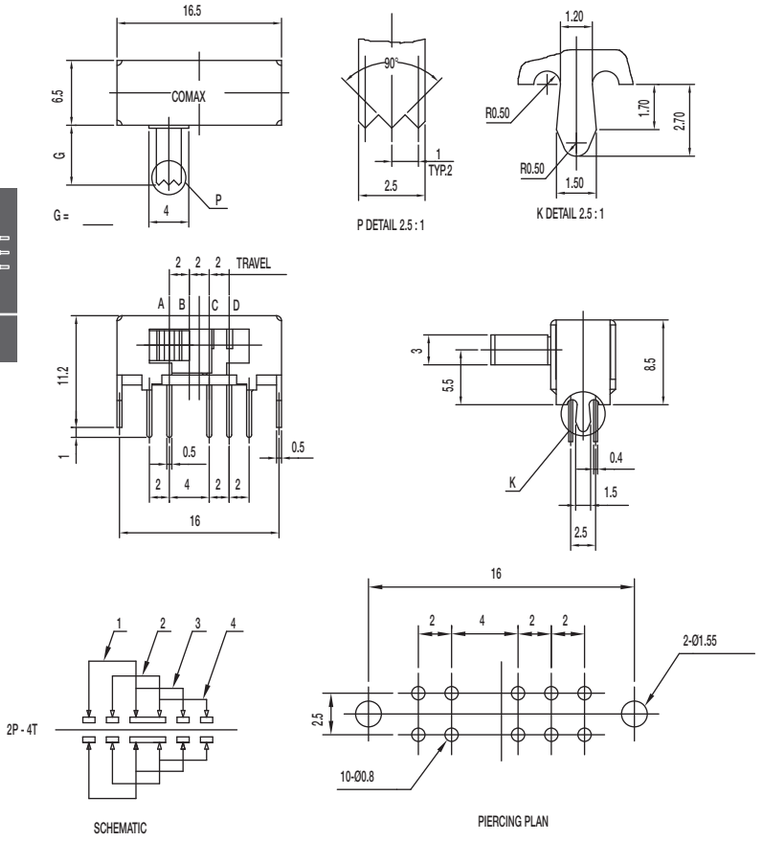

Specifications

CONTACT RATING: 0.3A @ 30 VDC

INITIAL CONTACT RESISTANCE: 30 m ohms max.

INSULATION RESISTANCE: 100 M ohms min.

DIELECTRIC STRENGTH: 500 V AC (50-60 Hz) between open terminals and between the frame and terminal.

OPERATING LIFE: 10,000 cycles with load

OPERATING FORCE: 200 ± 100 gf (1.96 ± 0.98N)
300 ± 150 gf (2.94 ± 1.47N)

TRAVEL: 2 ± 0.3 mm

OPERATING TEMPERATURE: -20˚C to 70˚C

Materials

KNOB: POM

FRAME: SPCC

CONTACT: Silver clad

TERMINAL: Silver plated

SK-12D04-G NS 1P2T NON-SHORTING

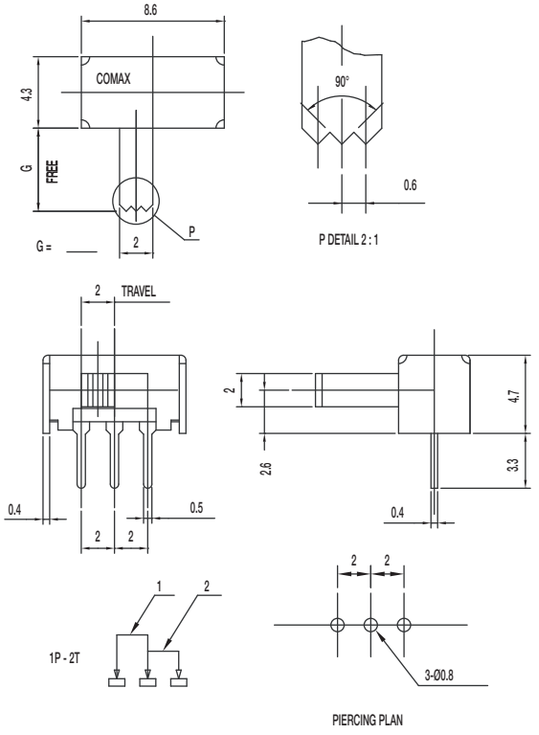

Specifications

CONTACT RATING: 0.3A @ 30 VDC

INITIAL CONTACT RESISTANCE: 30 m ohms max.

INSULATION RESISTANCE: 100 M ohms min.

DIELECTRIC STRENGTH: 500 V AC (50-60 Hz) between open terminals and between the frame and terminal.

OPERATING LIFE: 10,000 cycles with load

OPERATING FORCE: 250 ± 100 gf (2.45 ± 0.98N)

TRAVEL: 2 ± 0.3 mm

OPERATING TEMPERATURE: -20˚C to 70˚C

Materials

KNOB: POM

FRAME: SPCC

CONTACT: Silver clad

TERMINAL: Silver plated

Dimensions are shown: mm
Specifications and dimensions subject to change

SK-12D07-G NS PA 1P2T NON-SHORTING

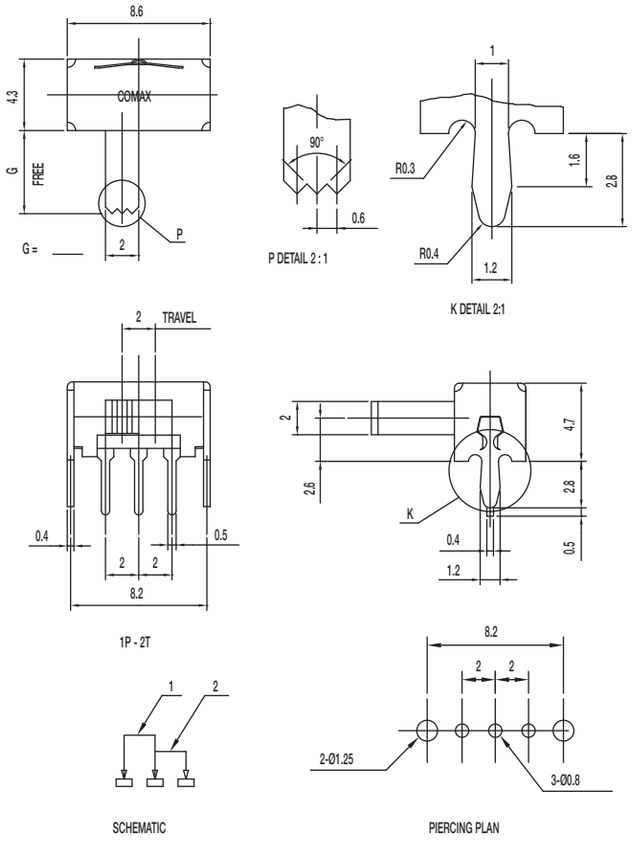

Specifications

CONTACT RATING: 0.3A @ 30 VDC

INITIAL CONTACT RESISTANCE: 30 m ohms max.

INSULATION RESISTANCE: 100 M ohms min.

DIELECTRIC STRENGTH: 500 V AC (50-60 Hz) between open terminals and between the frame and terminal.

OPERATING LIFE: 10,000 cycles with load

OPERATING FORCE: 250 ± 100 gf (2.45 ± 0.98N)

TRAVEL: 2 ± 0.3 mm

OPERATING TEMPERATURE: -20˚C to 70˚C

Materials

KNOB: PA

FRAME: SPCC

CONTACT: Silver clad

TERMINAL: Silver plated

SK-13D16-VG PA 1P3T

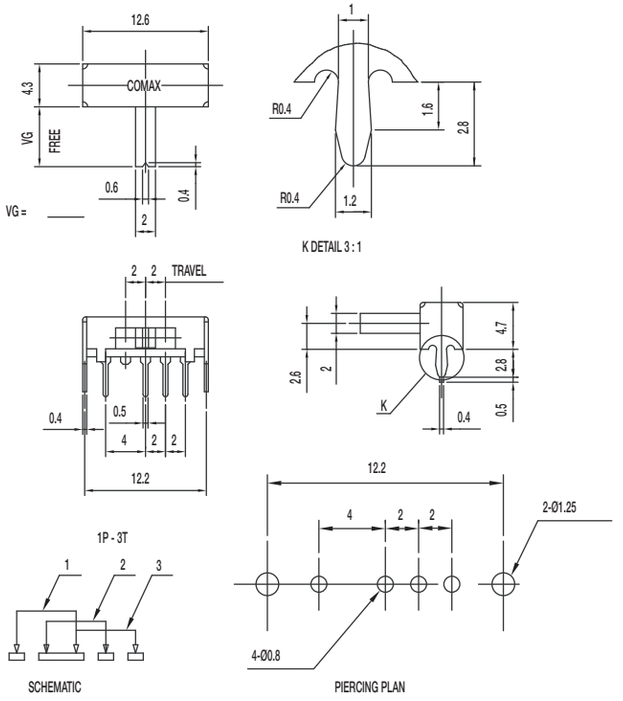

Specifications

CONTACT RATING: 0.3A @ 30 VDC

INITIAL CONTACT RESISTANCE: 30 m ohms max.

INSULATION RESISTANCE: 100 M ohms min.

DIELECTRIC STRENGTH: 500 V AC (50-60 Hz) between open terminals and between the frame and terminal.

OPERATING LIFE: 10,000 cycles with load

OPERATING FORCE: 200 ± 100 gf (1.96 ± 0.98N)
250 ± 100 gf (2.45 ± 0.98N)

TRAVEL: 2 ± 0.3 mm

OPERATING TEMPERATURE: -20˚C to 70˚C

Materials

KNOB: PA

FRAME: SPCC

CONTACT: Silver clad

TERMINAL: Silver plated

SK Series
Miniature Slide Switches

SK-14D01-G 1P4T

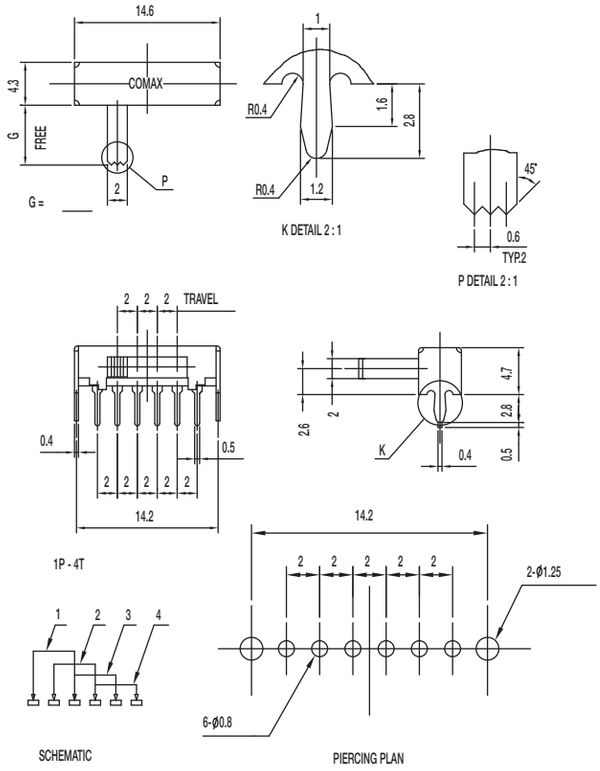

Specifications

CONTACT RATING: 0.3A @ 30 VDC

INITIAL CONTACT RESISTANCE: 30 m ohms max.

INSULATION RESISTANCE: 100 M ohms min.

DIELECTRIC STRENGTH: 500 V AC (50-60 Hz) between open terminals and between the frame and terminal.

OPERATING LIFE: 10,000 cycles with load

OPERATING FORCE: 200 ± 100 gf (1.96 ± 0.98N)
250 ± 100 gf (2.45 ± 0.98N)

TRAVEL: 2 ± 0.3 mm

OPERATING TEMPERATURE: -20˚C to 70˚C

Materials

KNOB: POM

FRAME: SPCC

CONTACT: Silver clad

TERMINAL: Silver plated

SK-14D07-VG PA 1P4T

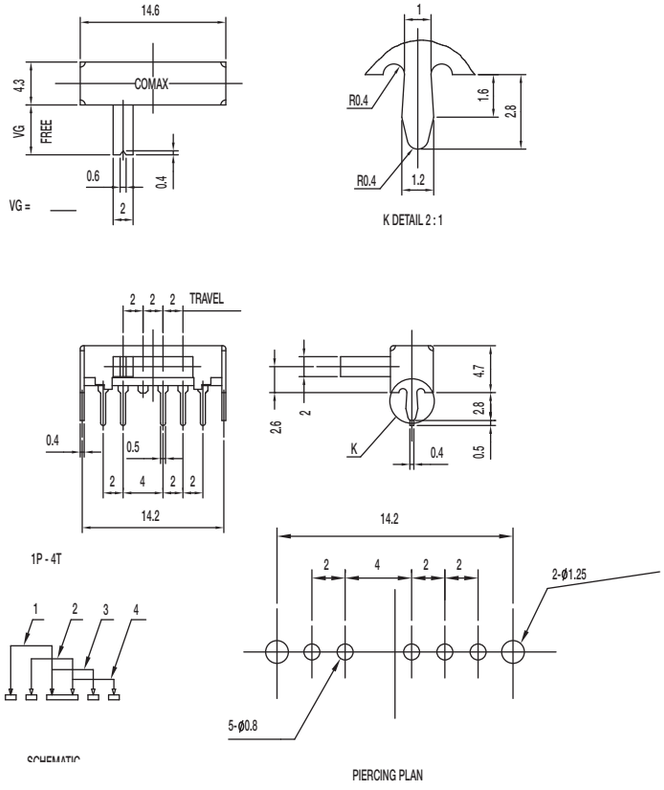

Specifications

CONTACT RATING: 0.3A @ 30 VDC

INITIAL CONTACT RESISTANCE: 30 m ohms max.

INSULATION RESISTANCE: 100 M ohms min.

DIELECTRIC STRENGTH: 500 V AC (50-60 Hz) between open terminals and between the frame and terminal.

OPERATING LIFE: 10,000 cycles with load

OPERATING FORCE: 200 ± 100 gf (1.96 ± 0.98N)
250 ± 100 gf (2.45 ± 0.98N)

TRAVEL: 2 ± 0.3 mm

OPERATING TEMPERATURE: -20˚C to 70˚C

Materials

KNOB: PA (UL94-V0)

FRAME: SPCC

CONTACT: Silver clad

TERMINAL: Silver plated

SK-22D07-G NS PA DPDT NON-SHORTING

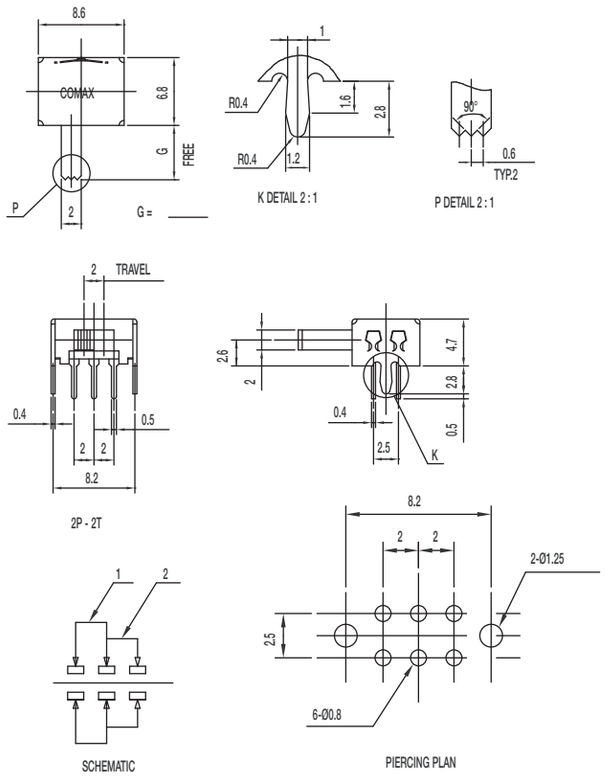

Specifications

CONTACT RATING: 0.3A @ 30 VDC
INITIAL CONTACT RESISTANCE: 30 m ohms max.
INSULATION RESISTANCE: 100 M ohms min.
DIELECTRIC STRENGTH: 500 V AC (50-60 Hz) between open terminals and between the frame and terminal.
OPERATING LIFE: 10,000 cycles with load
OPERATING FORCE: 250 ± 100 gf (2.45 ± 0.98N)
TRAVEL: 2 ± 0.3 mm
OPERATING TEMPERATURE: -20˚C to 70˚C

Materials

KNOB: PA (UL94V-0)
FRAME: SPCC
CONTACT: Silver clad
TERMINAL: Silver plated

SK-22H07-VG DPDT NON-SHORTING

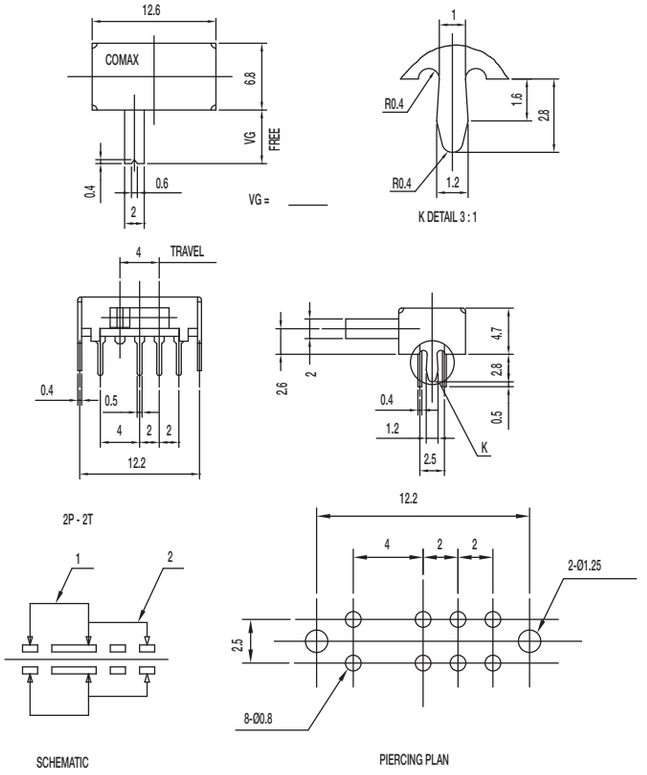

Specifications

CONTACT RATING: 0.3A @ 30 VDC
INITIAL CONTACT RESISTANCE: 30 m ohms max.
INSULATION RESISTANCE: 100 M ohms min.
DIELECTRIC STRENGTH: 500 V AC (50-60 Hz) between open terminals and between the frame and terminal.
OPERATING LIFE: 10,000 cycles with load
OPERATING FORCE: 200 ± 100 gf (1.96 ± 0.98N)
TRAVEL: 4 ± 0.3 mm
OPERATING TEMPERATURE: -20˚C to 70˚C

Materials

KNOB: POM
FRAME: SPCC
CONTACT: Silver clad
TERMINAL: Silver plated

SK Series
Miniature Slide Switches

SK-23D09-G 2P3T

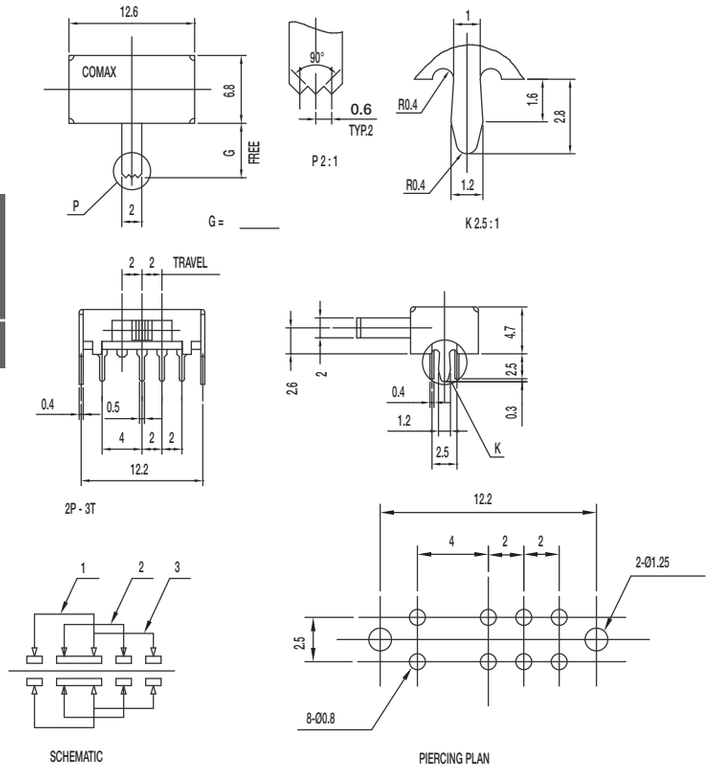

Specifications

CONTACT RATING: 0.3A @ 30 VDC

INITIAL CONTACT RESISTANCE: 30 m ohms max.

INSULATION RESISTANCE: 100 M ohms min.

DIELECTRIC STRENGTH: 500 V AC (50-60 Hz) between open terminals and between the frame and terminal.

OPERATING LIFE: 10,000 cycles with load

OPERATING FORCE: 200 ± 100 gf (1.96 ± 0.98N)
250 ± 100 gf (2.45 ± 0.98N)

TRAVEL: 2 ± 0.3 mm

OPERATING TEMPERATURE: -20˚C to 70˚C

Materials

KNOB: POM

FRAME: SPCC

CONTACT: Silver clad

TERMINAL: Silver plated

SK-24D02-G 2P4T

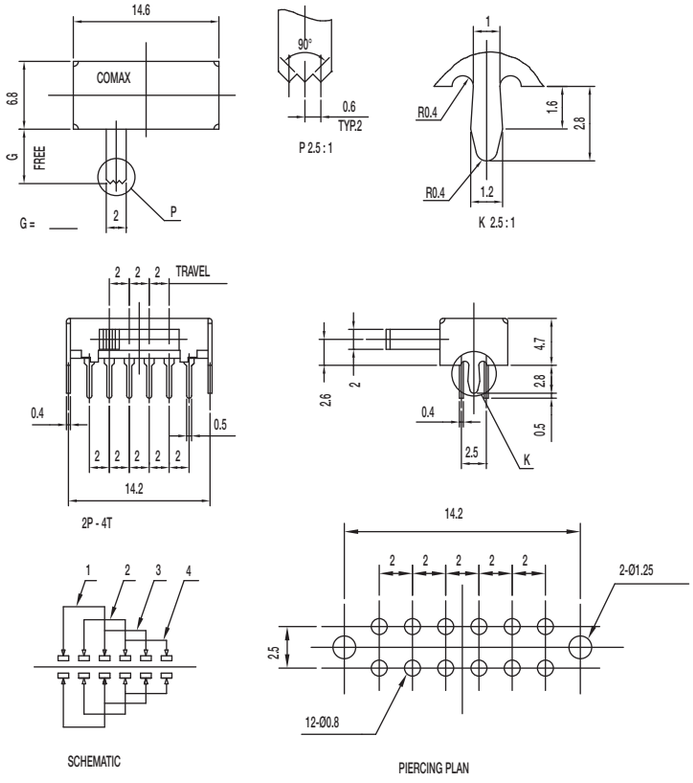

Specifications

CONTACT RATING: 0.3A @ 30 VDC

INITIAL CONTACT RESISTANCE: 30 m ohms max.

INSULATION RESISTANCE: 100 M ohms min.

DIELECTRIC STRENGTH: 500 V AC (50-60 Hz) between open terminals and between the frame and terminal.

OPERATING LIFE: 10,000 cycles with load

OPERATING FORCE: 250 ± 100 gf (2.45 ± 0.98N)

TRAVEL: 2 ± 0.3 mm

OPERATING TEMPERATURE: -20˚C to 70˚C

Materials

KNOB: POM

FRAME: SPCC

CONTACT: Silver clad

TERMINAL: Silver plated

SK-24D07-VG NS (S) 2P4T NON-SHORTING

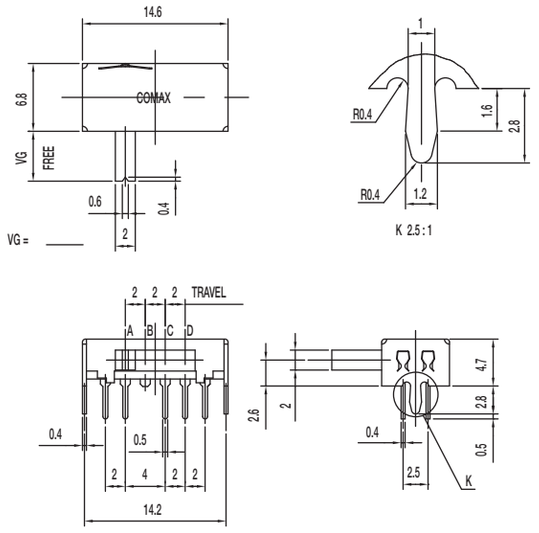

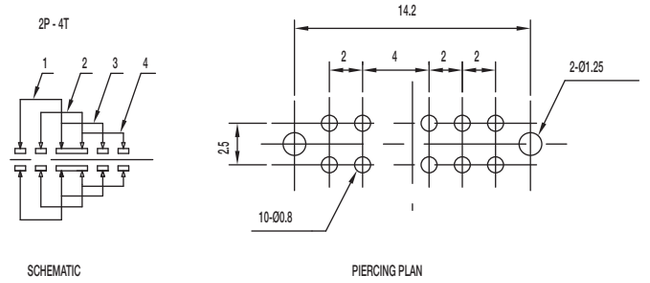

Specifications

CONTACT RATING: 0.3A @ 30 VDC

INITIAL CONTACT RESISTANCE: 30 m ohms max.

INSULATION RESISTANCE: 100 M ohms min.

DIELECTRIC STRENGTH: 500 V AC (50-60 Hz) between open terminals and between the frame and terminal.

OPERATING LIFE: 10,000 cycles with load

OPERATING FORCE: 350 ± 150 gf (3.43 ± 1.47N)

TRAVEL: 2 ± 0.3 mm

OPERATING TEMPERATURE: -20˚C to 70˚C

Materials

KNOB: POM

FRAME: SPCC

CONTACT: Silver clad

TERMINAL: Silver plated

SK-42D07-G NS 4P2T NON-SHORTING

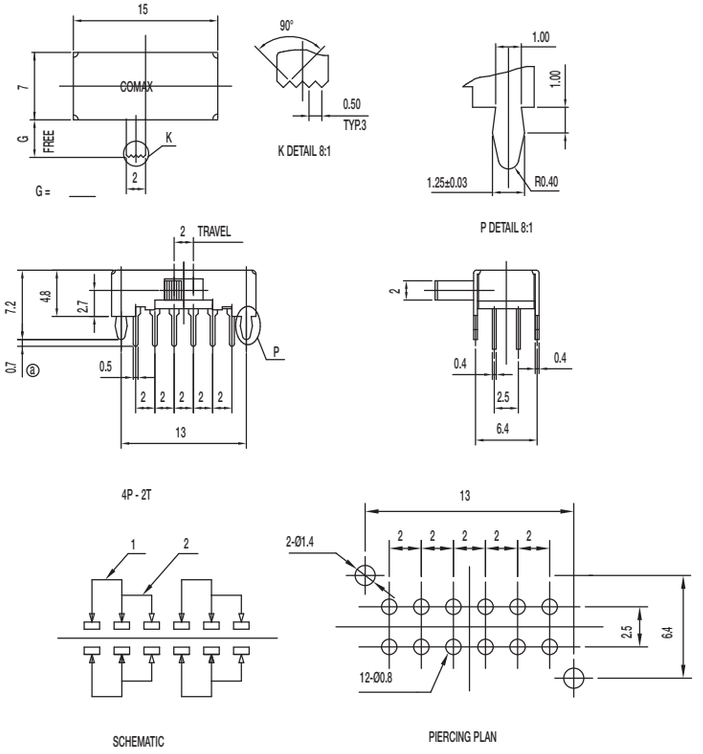

Specifications

CONTACT RATING: 0.3A @ 30 VDC

INITIAL CONTACT RESISTANCE: 30 m ohms max.

INSULATION RESISTANCE: 100 M ohms min.

DIELECTRIC STRENGTH: 500 V AC (50-60 Hz) between open terminals and between the frame and terminal.

OPERATING LIFE: 10,000 cycles with load

OPERATING FORCE: 250 ± 100 gf (2.45 ± 0.98N)

TRAVEL: 2 ± 0.3 mm

OPERATING TEMPERATURE: -20˚C to 70˚C

Materials

KNOB: POM

FRAME: SPCC

CONTACT: Silver clad

TERMINAL: Silver plated

SK Series
Miniature Slide Switches

SK-12D26-G 6.5 NS GY 1P2T NON-SHORTING

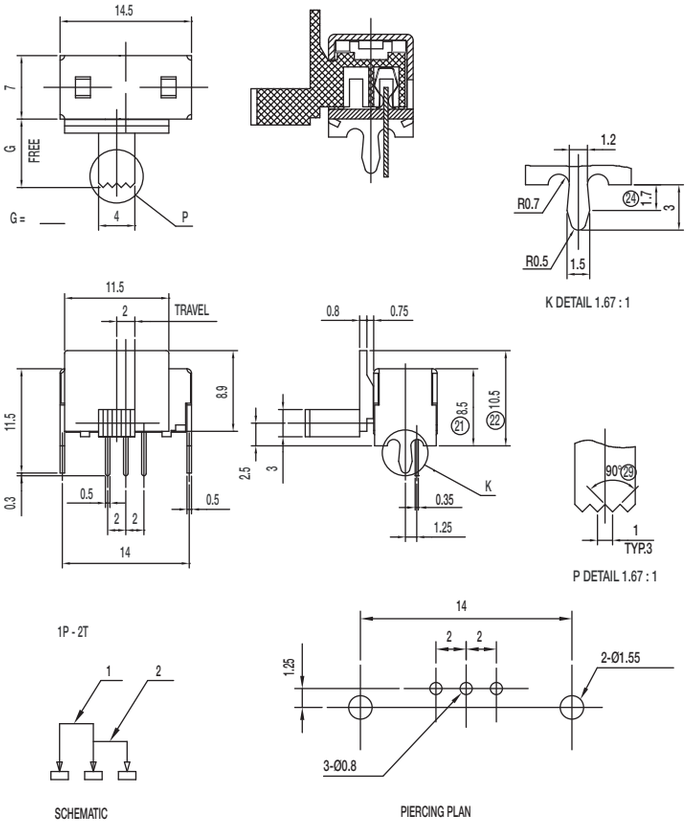

Specifications

CONTACT RATING: 0.3A @ 30 VDC
INITIAL CONTACT RESISTANCE: 20 m ohms max.
INSULATION RESISTANCE: 500 M ohms min.
DIELECTRIC STRENGTH: 500 V AC (50-60 Hz) between open terminals and between the frame and terminal.
OPERATING LIFE: 10,000 cycles with load
OPERATING FORCE: 250 ± 100 gf (2.45 ± 0.98N)
TRAVEL: 2 ± 0.3 mm
OPERATING TEMPERATURE: -20˚C to 70˚C

Materials

KNOB: POM
FRAME: SPCC
CONTACT: Silver clad
TERMINAL: Silver plated

SK-12D37-G NS 1P2T NON-SHORTING

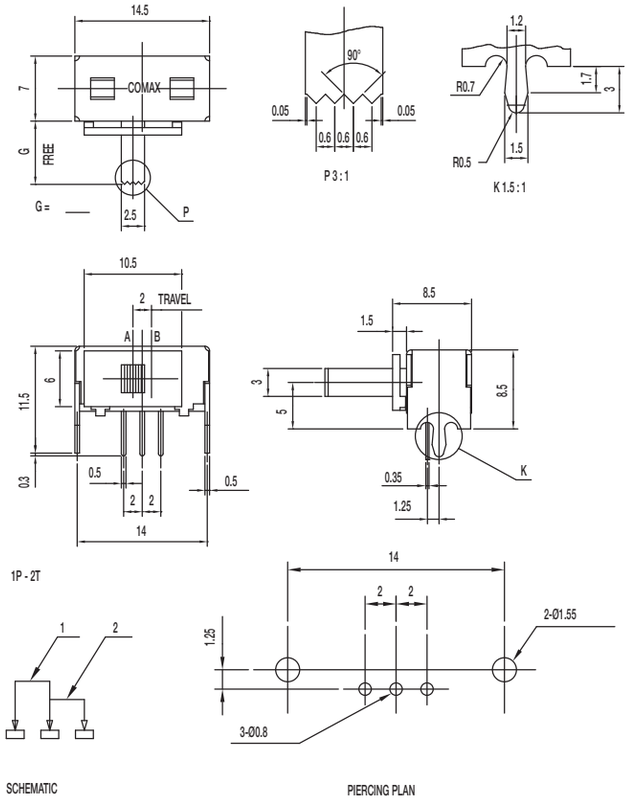

Specifications

CONTACT RATING: 0.3A @ 30 VDC
INITIAL CONTACT RESISTANCE: 30 m ohms max.
INSULATION RESISTANCE: 100 M ohms min.
DIELECTRIC STRENGTH: 500 V AC (50-60 Hz) between open terminals and between the frame and terminal.
OPERATING LIFE: 10,000 cycles with load
OPERATING FORCE: 200 ± 100 gf (1.96 ± 0.98N)
TRAVEL: 2 ± 0.3 mm
OPERATING TEMPERATURE: -20˚C to 70˚C

Materials

KNOB: POM
FRAME: SPCC
CONTACT: Silver clad
TERMINAL: Silver plated

SK-13D37-G NS 1P3T NON-SHORTING

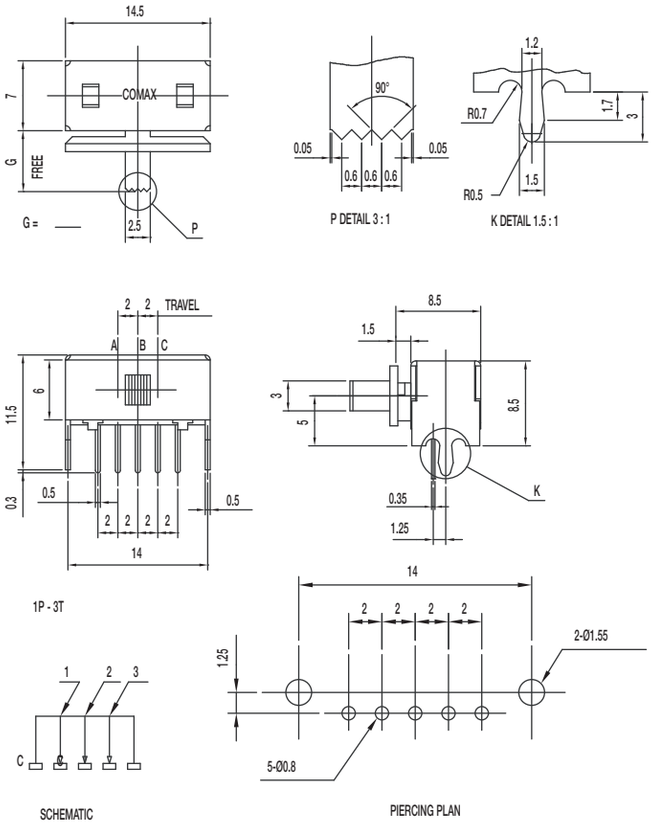

Specifications

CONTACT RATING: 0.3A @ 30 VDC
INITIAL CONTACT RESISTANCE: 30 m ohms max.
INSULATION RESISTANCE: 100 M ohms min.
DIELECTRIC STRENGTH: 500 V AC (50-60 Hz) between open terminals and between the frame and terminal.
OPERATING LIFE: 10,000 cycles with load
OPERATING FORCE: 200 ± 100 gf (1.96 ± 0.98N)
300 ± 150 gf (2.94 ± 1.47N)
TRAVEL: 2 ± 0.3 mm
OPERATING TEMPERATURE: -20˚C to 70˚C

Materials

KNOB: POM
FRAME: SPCC
CONTACT: Silver clad
TERMINAL: Silver plated

SK-22D27-G NS DPDT NON-SHORTING

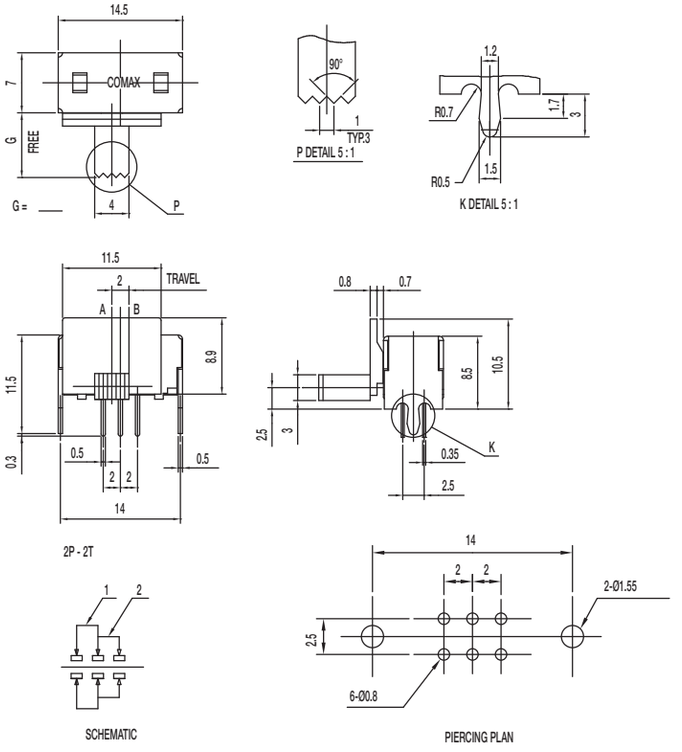

Specifications

CONTACT RATING: 0.3A @ 30 VDC
INITIAL CONTACT RESISTANCE: 30 m ohms max.
INSULATION RESISTANCE: 100 M ohms min.
DIELECTRIC STRENGTH: 500 V AC (50-60 Hz) between open terminals and between the frame and terminal.
OPERATING LIFE: 10,000 cycles with load
OPERATING FORCE: 250 ± 100 gf (2.45 ± 0.98N)
TRAVEL: 2 ± 0.3 mm
OPERATING TEMPERATURE: -20˚C to 70˚C

Materials

KNOB: POM
FRAME: SPCC
CONTACT: Silver clad
TERMINAL: Silver plated

SK Series
Miniature Slide Switches

SK-22D37-G NS DPDT NON-SHORTING

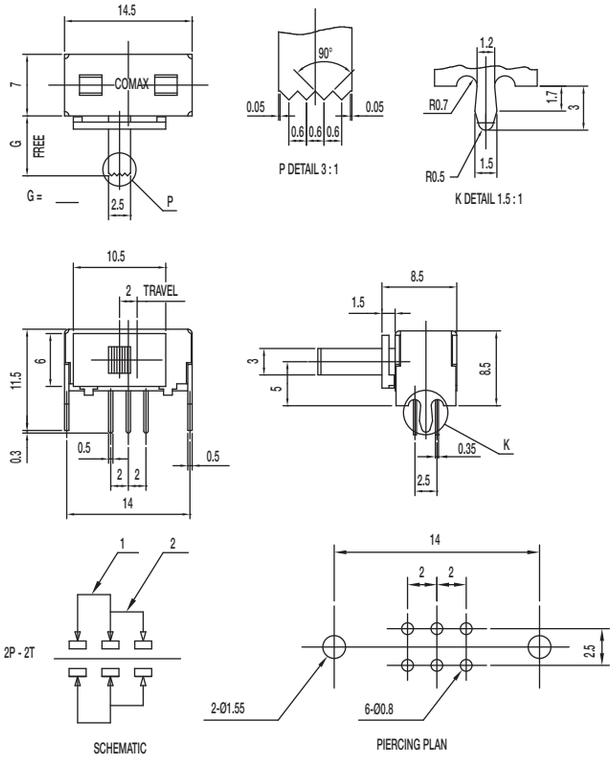

Specifications

CONTACT RATING: 0.3A @ 30 VDC

INITIAL CONTACT RESISTANCE: 30 m ohms max.

INSULATION RESISTANCE: 100 M ohms min.

DIELECTRIC STRENGTH: 500 V AC (50-60 Hz) between open terminals and between the frame and terminal.

OPERATING LIFE: 10,000 cycles with load

OPERATING FORCE: 200 ± 100 gf (1.96 ± 0.98N)

TRAVEL: 2 ± 0.3 mm

OPERATING TEMPERATURE: -20˚C to 70˚C

Materials

KNOB: POM

FRAME: SPCC

CONTACT: Silver clad

TERMINAL: Silver plated

SK-23D37-G NS 2P3T NON-SHORTING

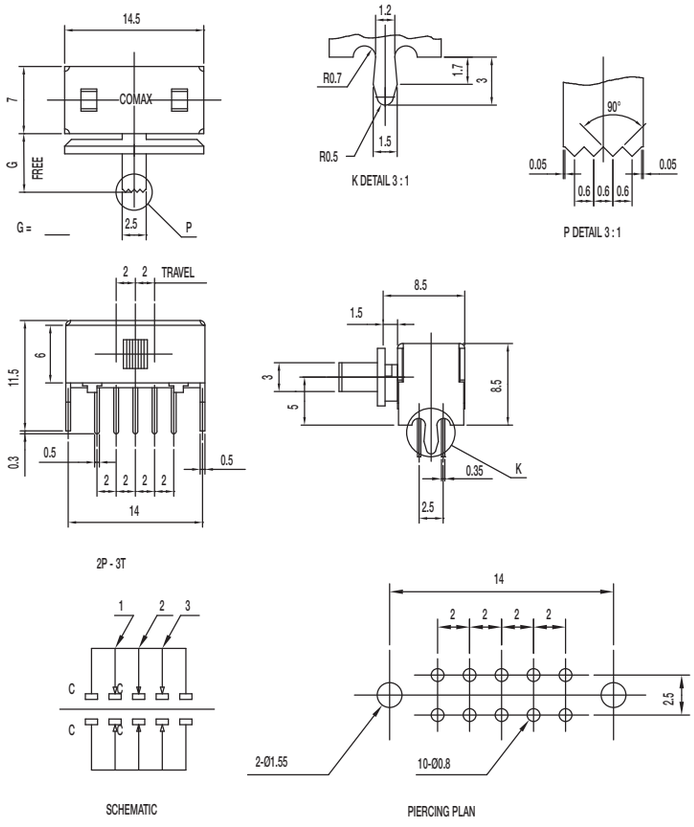

Specifications

CONTACT RATING: 0.3A @ 30 VDC

INITIAL CONTACT RESISTANCE: 30 m ohms max.

INSULATION RESISTANCE: 100 M ohms min.

DIELECTRIC STRENGTH: 500 V AC (50-60 Hz) between open terminals and between the frame and terminal.

OPERATING LIFE: 10,000 cycles with load

OPERATING FORCE: 200 ± 100 gf (1.96 ± 0.98N)
300 ± 150 gf (2.94 ± 1.47N)

TRAVEL: 2 ± 0.3 mm

OPERATING TEMPERATURE: -20˚C to 70˚C

Materials

KNOB: POM

FRAME: SPCC

CONTACT: Silver clad

TERMINAL: Silver plated

Dimensions are shown: mm
Specifications and dimensions subject to change

SK-22H01-G RP DPDT NON-SHORTING

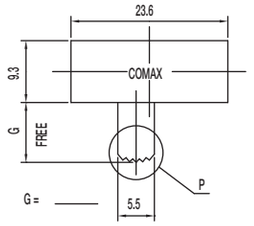

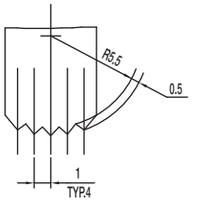

P DETAIL 2 : 1

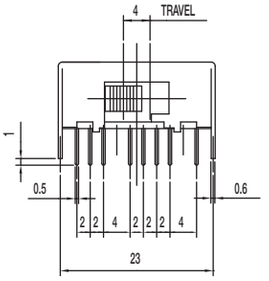

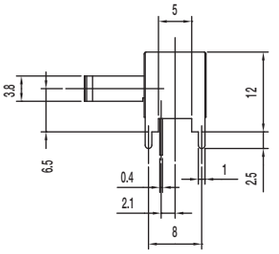

2P - 2T

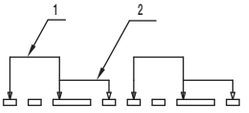

SCHEMATIC

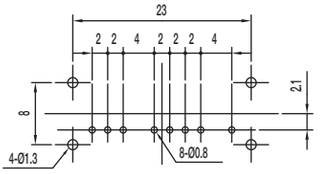

PIERCING PLAN

Specifications

CONTACT RATING: 0.3A @ 30 VDC

INITIAL CONTACT RESISTANCE: 30 m ohms max.

INSULATION RESISTANCE: 100 M ohms min.

DIELECTRIC STRENGTH: 500 V AC (50-60 Hz) between open terminals and between the frame and terminal.

OPERATING LIFE: 10,000 cycles with load

OPERATING FORCE: 250 ± 100 gf (2.45 ± 0.98N)

TRAVEL: 4 ± 0.3 mm

OPERATING TEMPERATURE: -20˚C to 70˚C

Materials

KNOB: POM

FRAME: SPCC

CONTACT: Silver clad

TERMINAL: Silver plated

SK-22H17-G DPDT NON-SHORTING

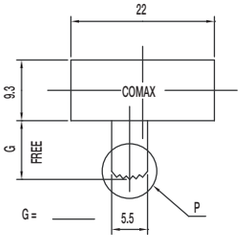

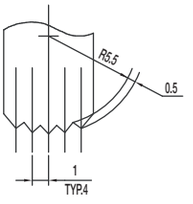

P DETAIL 2 : 1

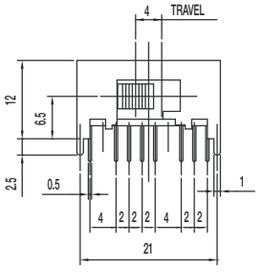

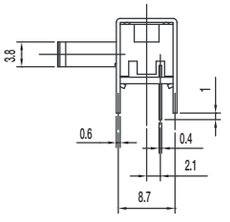

2P - 2T

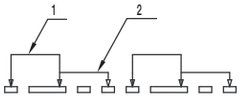

SCHEMATIC

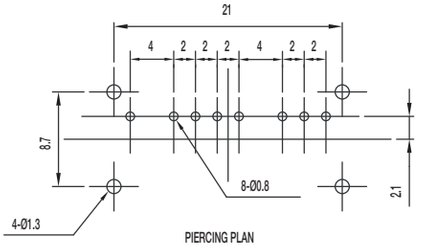

PIERCING PLAN

Specifications

CONTACT RATING: 0.3A @ 30 VDC

INITIAL CONTACT RESISTANCE: 30 m ohms max.

INSULATION RESISTANCE: 100 M ohms min.

DIELECTRIC STRENGTH: 500 V AC (50-60 Hz) between open terminals and between the frame and terminal.

OPERATING LIFE: 10,000 cycles with load

OPERATING FORCE: 250 ± 100 gf (2.45 ± 0.98N)

TRAVEL: 4 ± 0.3 mm

OPERATING TEMPERATURE: -20˚C to 70˚C

Materials

KNOB: POM

FRAME: SPCC

CONTACT: Silver clad

TERMINAL: Silver plated

Dimensions are shown: mm
Specifications and dimensions subject to change

SK Series
Miniature Slide Switches

SK-23D10-G 2P3T

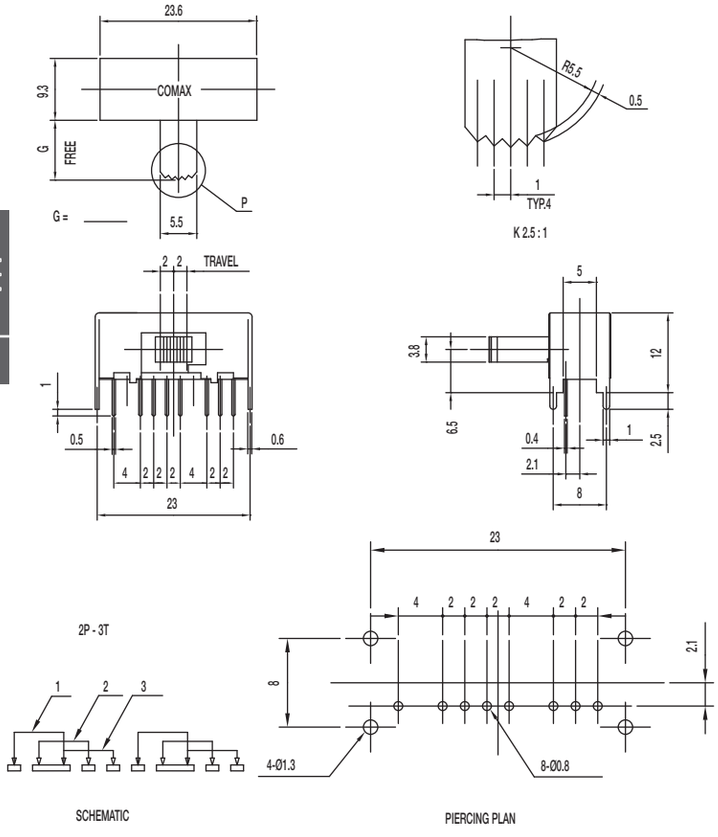

Specifications

CONTACT RATING: 0.3A @ 30 VDC

INITIAL CONTACT RESISTANCE: 30 m ohms max.

INSULATION RESISTANCE: 100 M ohms min.

DIELECTRIC STRENGTH: 500 V AC (50-60 Hz) between open terminals and between the frame and terminal.

OPERATING LIFE: 10,000 cycles with load

OPERATING FORCE: 200 ± 100 gf (1.96 ± 0.98N)
350 ± 150 gf (3.43 ± 1.47N)

TRAVEL: 2 ± 0.3 mm

OPERATING TEMPERATURE: -20˚C to 70˚C

Materials

KNOB: POM

FRAME: SPCC

CONTACT: Silver clad

TERMINAL: Silver plated

SK-23D13-G 2P3T

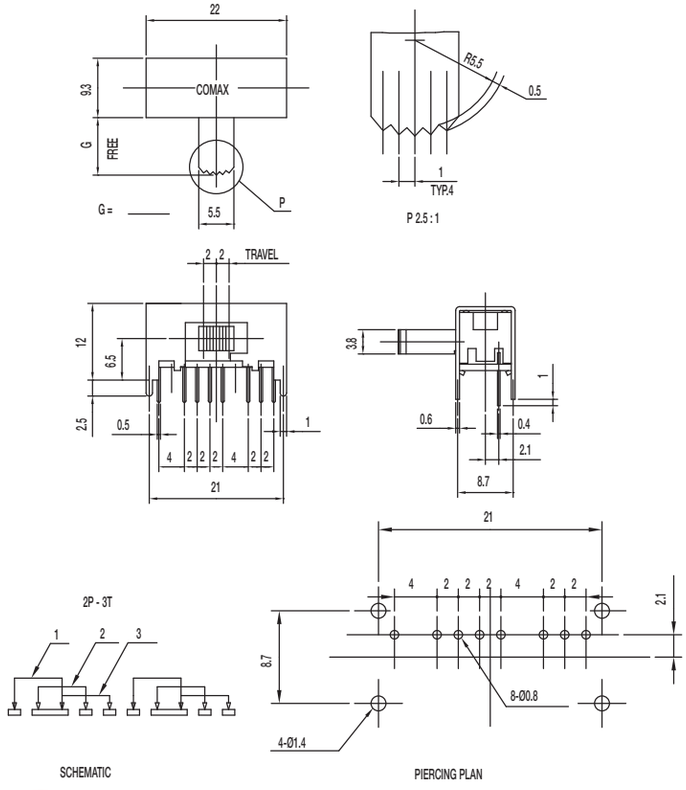

Specifications

CONTACT RATING: 0.3A @ 30 VDC

INITIAL CONTACT RESISTANCE: 30 m ohms max.

INSULATION RESISTANCE: 100 M ohms min.

DIELECTRIC STRENGTH: 500 V AC (50-60 Hz) between open terminals and between the frame and terminal.

OPERATING LIFE: 10,000 cycles with load

OPERATING FORCE: 200 ± 100 gf (1.96 ± 0.98N)
300 ± 150 gf (2.94 ± 1.47N)

TRAVEL: 2 ± 0.3 mm

OPERATING TEMPERATURE: -20˚C to 70˚C

Materials

KNOB: POM

FRAME: SPCC

CONTACT: Silver clad

TERMINAL: Silver plated

Dimensions are shown: mm
Specifications and dimensions subject to change

SK-42H01-G 4P2T NON-SHORTING

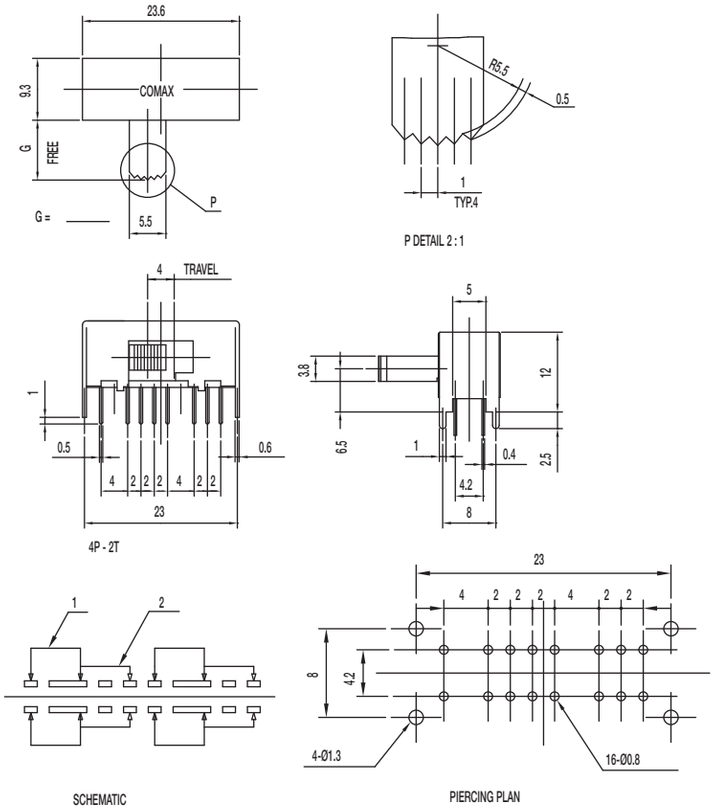

Specifications

CONTACT RATING: 0.3A @ 30 VDC

INITIAL CONTACT RESISTANCE: 30 m ohms max.

INSULATION RESISTANCE: 100 M ohms min.

DIELECTRIC STRENGTH: 500 V AC (50-60 Hz) between open terminals and between the frame and terminal.

OPERATING LIFE: 10,000 cycles with load

OPERATING FORCE: 250 ± 100 gf (2.45 ± 0.98N)

TRAVEL: 4 ± 0.3 mm

OPERATING TEMPERATURE: -20˚C to 70˚C

Materials

KNOB: POM

FRAME: SPCC

CONTACT: Silver clad

TERMINAL: Silver plated

SK-42H02-G 4P2T NON-SHORTING

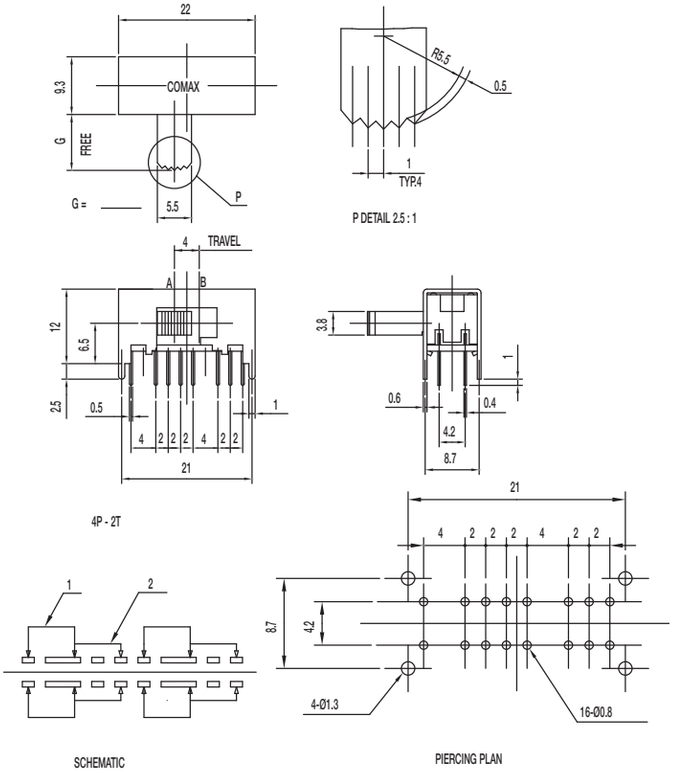

Specifications

CONTACT RATING: 0.3A @ 30 VDC

INITIAL CONTACT RESISTANCE: 30 m ohms max.

INSULATION RESISTANCE: 100 M ohms min.

DIELECTRIC STRENGTH: 500 V AC (50-60 Hz) between open terminals and between the frame and terminal.

OPERATING LIFE: 10,000 cycles with load

OPERATING FORCE: 250 ± 100 gf (2.45 ± 0.98N)

TRAVEL: 4 ± 0.3 mm

OPERATING TEMPERATURE: -20˚C to 70˚C

Materials

KNOB: POM

FRAME: SPCC

CONTACT: Silver clad

TERMINAL: Silver plated

SK Series
Miniature Slide Switches

SK-42H05 4P2T NON-SHORTING

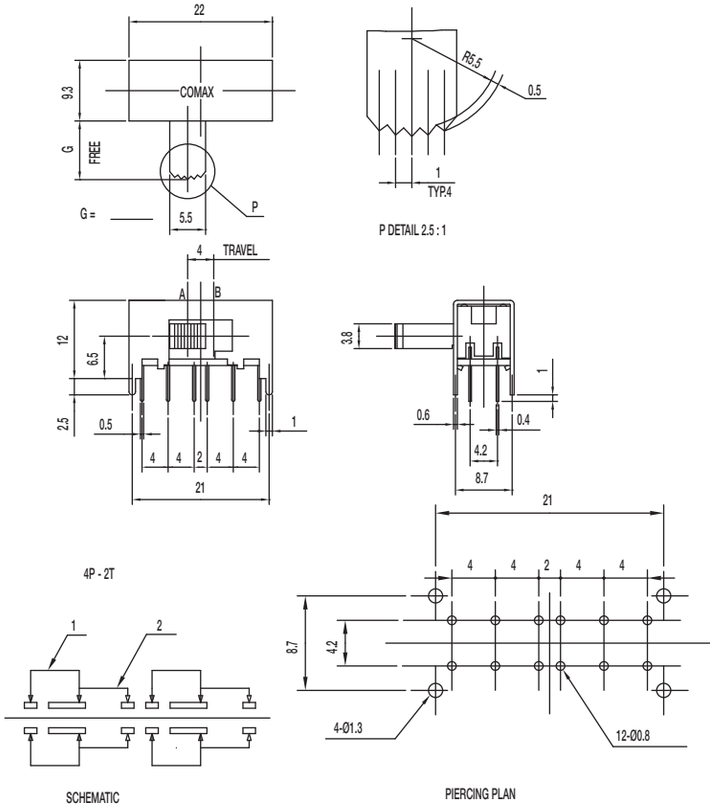

Specifications

CONTACT RATING: 0.3A @ 30 VDC

INITIAL CONTACT RESISTANCE: 30 m ohms max.

INSULATION RESISTANCE: 100 M ohms min.

DIELECTRIC STRENGTH: 500 V AC (50-60 Hz) between open terminals and between the frame and terminal.

OPERATING LIFE: 10,000 cycles with load

OPERATING FORCE: 250 ± 100 gf (2.45 ± 0.98N)

TRAVEL: 4 ± 0.3 mm

OPERATING TEMPERATURE: -20˚C to 70˚C

Materials

KNOB: POM

FRAME: SPCC

CONTACT: Silver clad

TERMINAL: Silver plated

SK-42H06-G 4P2T NON-SHORTING

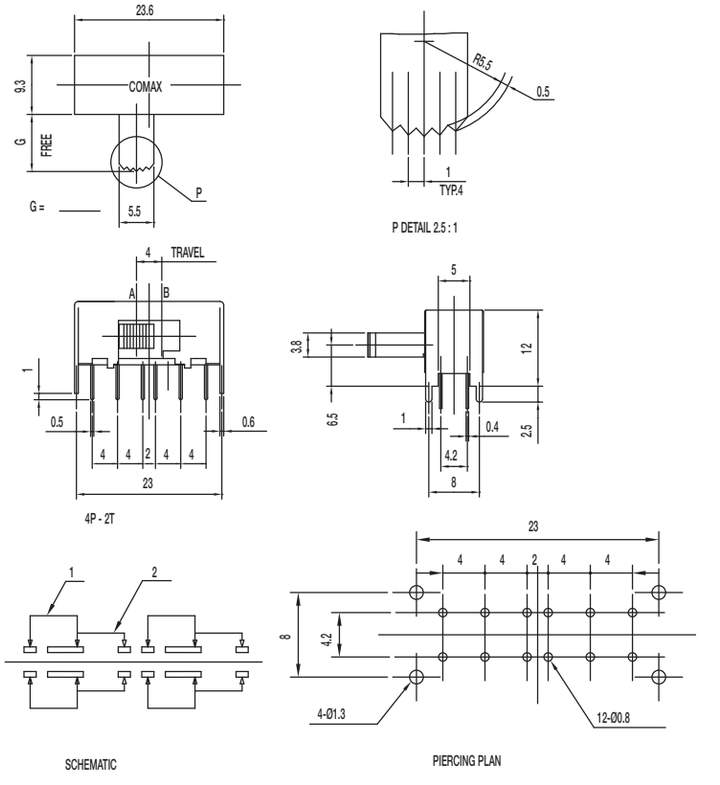

Specifications

CONTACT RATING: 0.3A @ 30 VDC

INITIAL CONTACT RESISTANCE: 30 m ohms max.

INSULATION RESISTANCE: 100 M ohms min.

DIELECTRIC STRENGTH: 500 V AC (50-60 Hz) between open terminals and between the frame and terminal.

OPERATING LIFE: 10,000 cycles with load

OPERATING FORCE: 250 ± 100 gf (2.45 ± 0.98N)
350 ± 150 gf (3.43 ± 1.47N)

TRAVEL: 4 ± 0.3 mm

OPERATING TEMPERATURE: -20˚C to 70˚C

Materials

KNOB: POM

FRAME: SPCC

CONTACT: Silver clad

TERMINAL: Silver plated

Dimensions are shown: mm
Specifications and dimensions subject to change

SK-43D01-G 4P3T

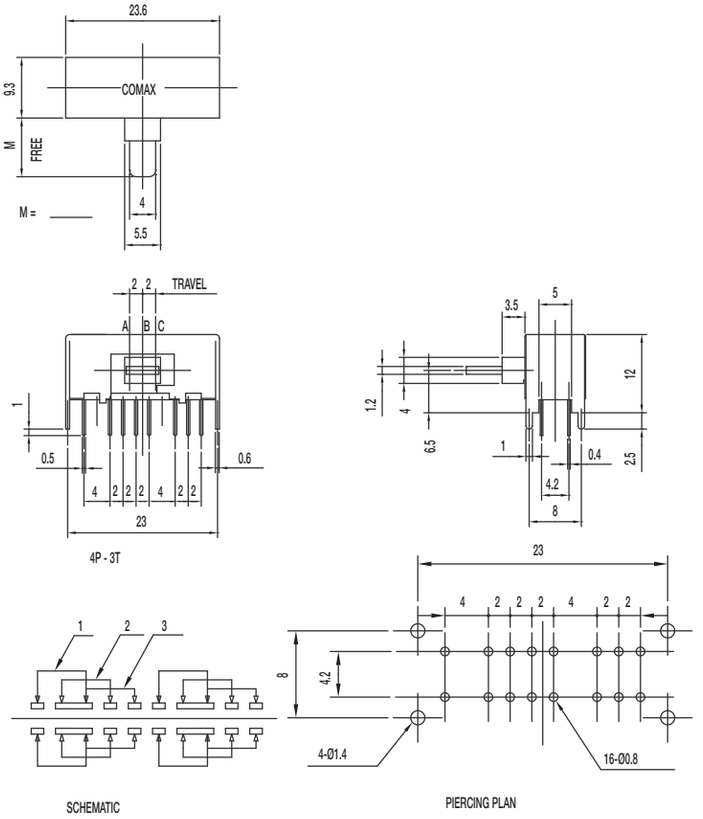

Specifications

CONTACT RATING: 0.3A @ 30 VDC

INITIAL CONTACT RESISTANCE: 30 m ohms max.

INSULATION RESISTANCE: 100 M ohms min.

DIELECTRIC STRENGTH: 500 V AC (50-60 Hz) between open terminals and between the frame and terminal.

OPERATING LIFE: 10,000 cycles with load

OPERATING FORCE: 250 ± 100 gf (2.45 ± 0.98N)
350 ± 150 gf (3.43 ± 1.47N)

TRAVEL: 2 ± 0.3 mm

OPERATING TEMPERATURE: -20˚C to 70˚C

Materials

KNOB: POM

FRAME: SPCC

CONTACT: Silver clad

TERMINAL: Silver plated

SK-43D03-G 4P3T SHORTING

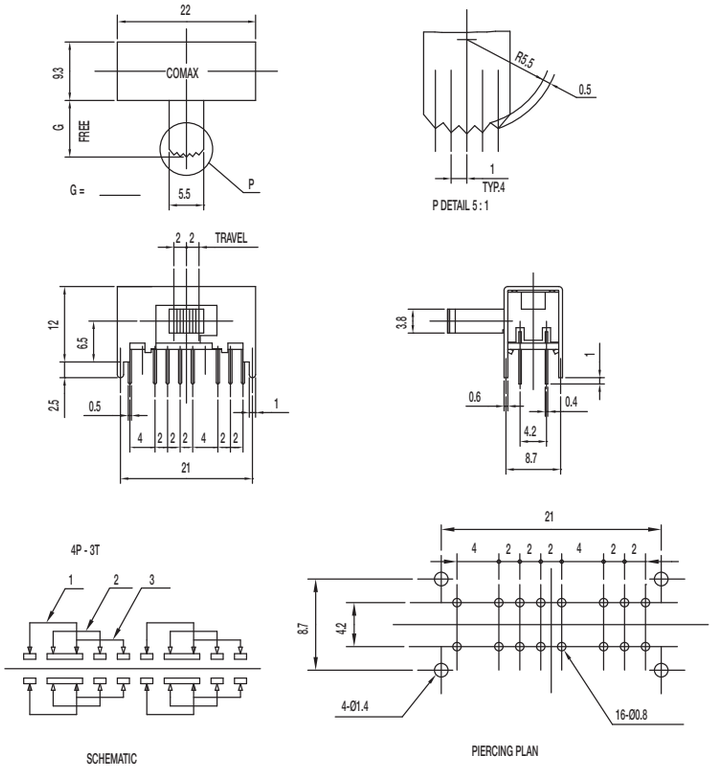

Specifications

CONTACT RATING: 0.3A @ 30 VDC

INITIAL CONTACT RESISTANCE: 30 m ohms max.

INSULATION RESISTANCE: 100 M ohms min.

DIELECTRIC STRENGTH: 500 V AC (50-60 Hz) between open terminals and between the frame and terminal.

OPERATING LIFE: 10,000 cycles with load

OPERATING FORCE: 250 ± 100 gf (2.45 ± 0.98N)
350 ± 150 gf (3.43 ± 1.47N)

TRAVEL: 2 ± 0.3 mm

OPERATING TEMPERATURE: -20˚C to 70˚C

Materials

KNOB: POM

FRAME: SPCC

CONTACT: Silver clad

TERMINAL: Silver plated

Dimensions are shown: mm
Specifications and dimensions subject to change

SK Series
Miniature Slide Switches

SK-44D01-G 4P4T SHORTING

Specifications

CONTACT RATING: 0.3A @ 30 VDC
INITIAL CONTACT RESISTANCE: 30 m ohms max.
INSULATION RESISTANCE: 100 M ohms min.
DIELECTRIC STRENGTH: 500 V AC (50-60 Hz) between open terminals and between the frame and terminal.
OPERATING LIFE: 10,000 cycles with load
OPERATING FORCE: 150 ± 50 gf (1.47 ± 0.49N)
200 ± 100 gf (1.96 ± 0.98N); 250 ± 100 gf (2.45 ± 0.98N)
TRAVEL: 2 ± 0.3 mm
OPERATING TEMPERATURE: -20˚C to 70˚C

Materials

KNOB: POM
FRAME: SPCC
CONTACT: Silver clad
TERMINAL: Silver plated

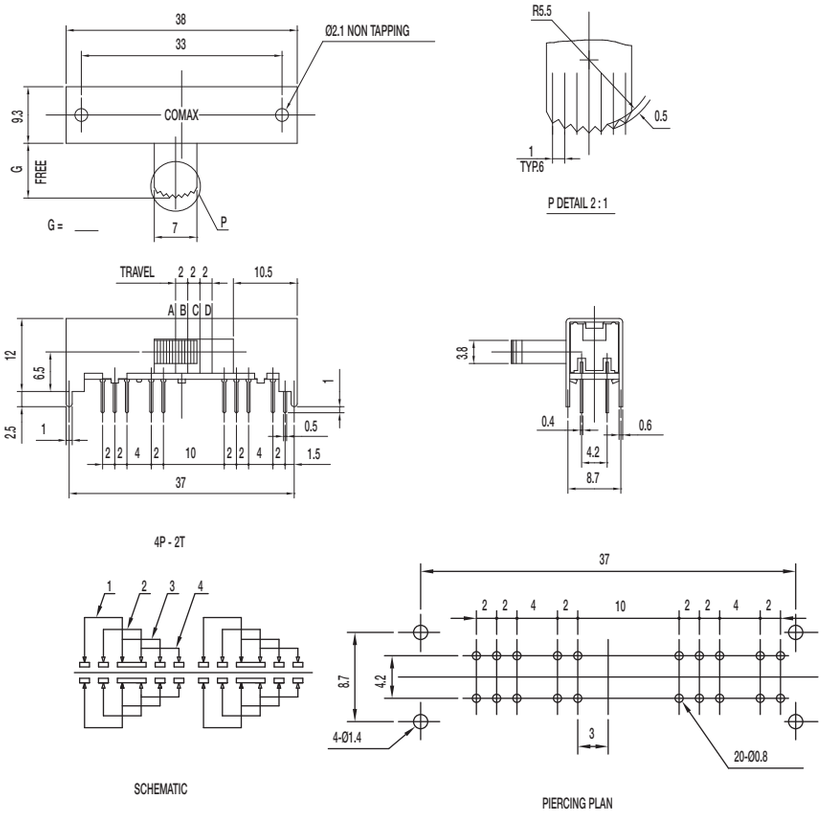

Features/Benefits

- *Broad range of products*
- *Various circuit design, SPDT, 4P3T, vertical, right angle*
- *Compact miniature slide switch*
- *Shorting or non-shorting*
- *Custom design available*

Typical Applications

- *Consumer electronics*
- *Computer peripherals*
- *Telecommunication*
- *Audio & visual equipment*
- *Medical*
- *Automotive*

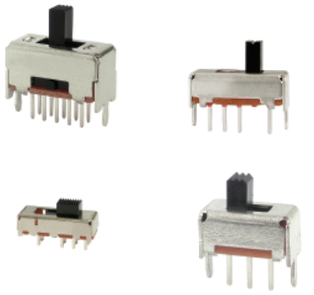

SS-12D1305-G 2 1P2T NON-SHORTING

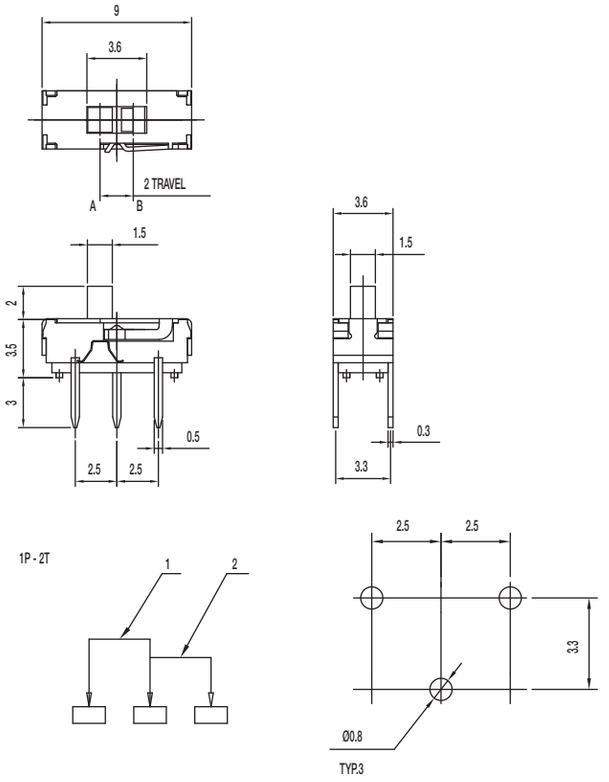

Specifications

CONTACT RATING: 0.3A @ 6 VDC

INITIAL CONTACT RESISTANCE: 70 m ohms max.

INSULATION RESISTANCE: 100 M ohms min.

DIELECTRIC STRENGTH: 500 V AC (50-60 Hz) between open terminals and between the frame and terminal.

OPERATING LIFE: 10,000 cycles with load

OPERATING FORCE: 200 ± 100 gf (1.96 ± 0.98N)

TRAVEL: 2 ± 0.3 mm

OPERATING TEMPERATURE: -20˚C to 70˚C

Materials

KNOB: PA

COVER: SUS

HOUSING: PA

CONTACT: Silver clad

TERMINAL: Silver plated

SS Series
Miniature Slide Switches

SS-12D1505-G 1P2T NON-SHORTING

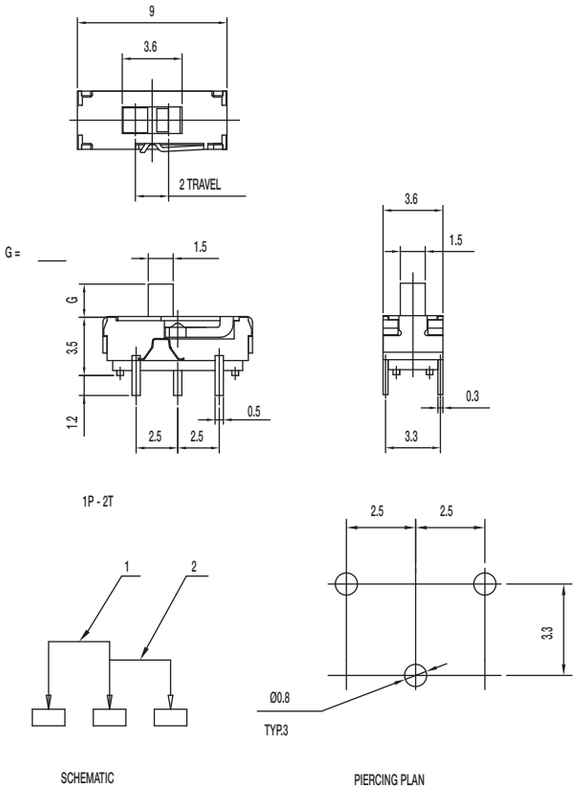

Specifications

CONTACT RATING: 0.3A @ 6 VDC

INITIAL CONTACT RESISTANCE: 70 m ohms max.

INSULATION RESISTANCE: 100 M ohms min.

DIELECTRIC STRENGTH: 500 V AC (50-60 Hz) between open terminals and between the frame and terminal.

OPERATING LIFE: 10,000 cycles with load

OPERATING FORCE: 200 ± 100 gf (1.96 ± 0.98N)

TRAVEL: 2 ± 0.3 mm

OPERATING TEMPERATURE: -20˚C to 80˚C

Materials

KNOB: PA

COVER: SUS

HOUSING: PA

CONTACT: Silver clad

TERMINAL: Silver plated

SS-22D0205-G DPDT NON-SHORTING

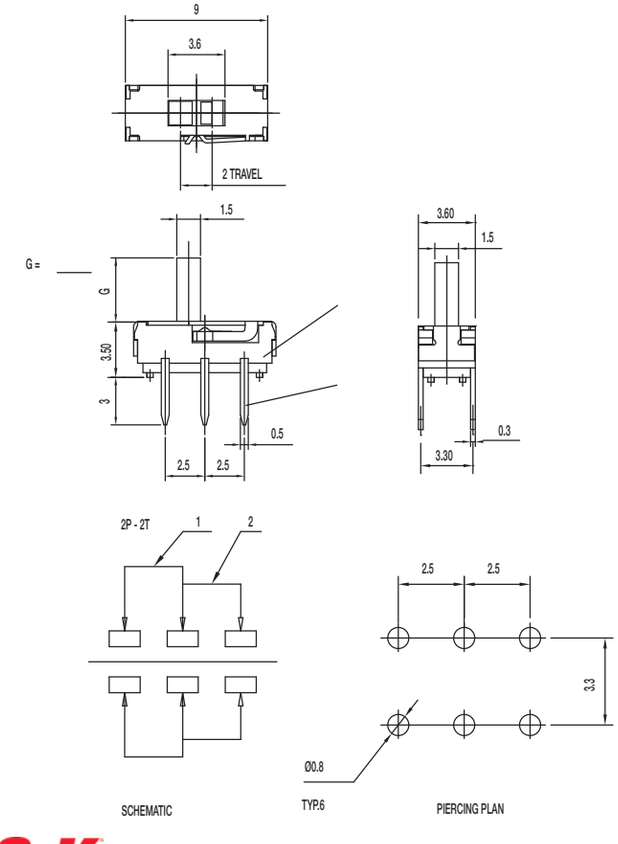

Specifications

CONTACT RATING: 0.3A @ 6 VDC

INITIAL CONTACT RESISTANCE: 70 m ohms max.

INSULATION RESISTANCE: 100 M ohms min.

DIELECTRIC STRENGTH: 500 V AC (50-60 Hz) between open terminals and between the frame and terminal.

OPERATING LIFE: 10,000 cycles with load

OPERATING FORCE: 200 ± 100 gf (1.96 ± 0.98N)

TRAVEL: 2 ± 0.3 mm

OPERATING TEMPERATURE: -20˚C to 80˚C

Materials

KNOB: PA

COVER: SUS

HOUSING: PA

CONTACT: Silver clad

TERMINAL: Silver plated

SS-22D0205-G 2 -LT DPDT NON-SHORTING

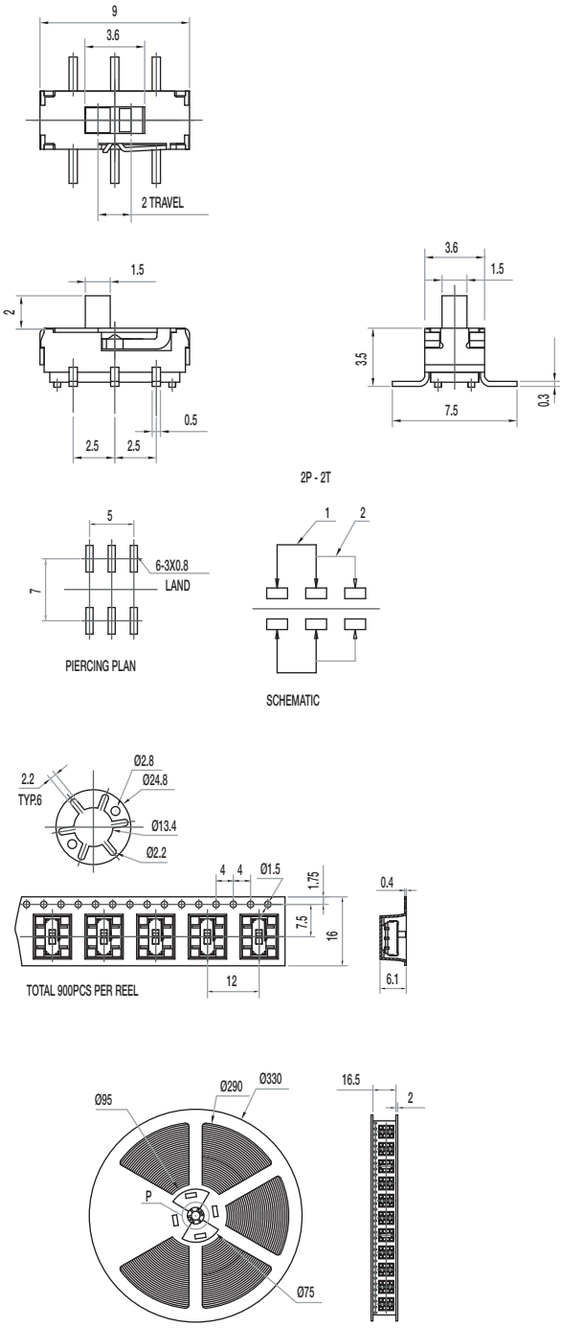

Specifications

CONTACT RATING: 0.3A @ 6 VDC

INITIAL CONTACT RESISTANCE: 70 m ohms max.

INSULATION RESISTANCE: 100 M ohms min.

DIELECTRIC STRENGTH: 500 V AC (50-60 Hz) between open terminals and between the frame and terminal.

OPERATING LIFE: 10,000 cycles with load

OPERATING FORCE: 200 ± 100 gf (1.96 ± 0.98N)

TRAVEL: 2 ± 0.3 mm

OPERATING TEMPERATURE: -20˚C to 70˚C

Materials

KNOB: PA

COVER: SUS

HOUSING: PA

CONTACT: Silver clad

TERMINAL: Silver plated

SS Series
Miniature Slide Switches

SS-23D31-G 1.5 NS 2P3T NON-SHORTING

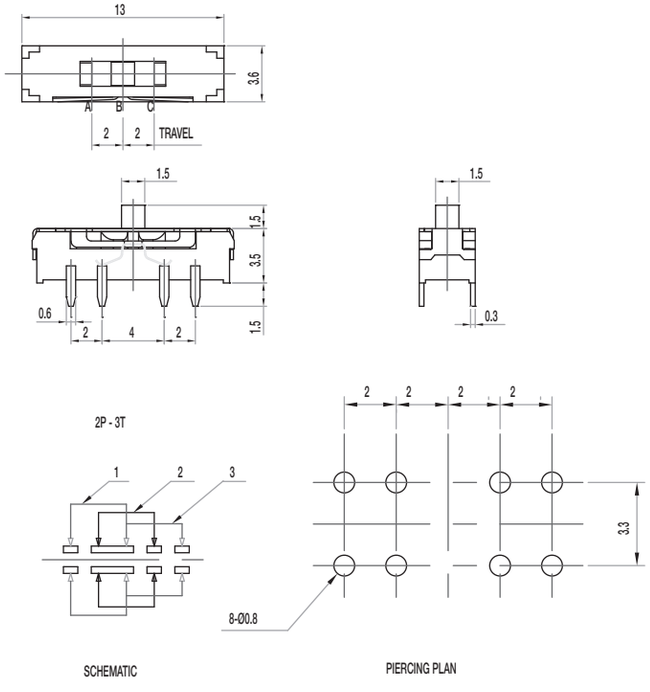

Specifications

CONTACT RATING: 0.3A @ 6 VDC

INITIAL CONTACT RESISTANCE: 70 m ohms max.

INSULATION RESISTANCE: 100 M ohms min.

DIELECTRIC STRENGTH: 500 V AC (50-60 Hz) between open terminals and between the frame and terminal.

OPERATING LIFE: 10,000 cycles with load

OPERATING FORCE: 200 ± 100 gf (1.96 ± 0.98N)
250 ± 100 gf (2.47 ± 0.98N)

TRAVEL: 2 ± 0.3 mm

OPERATING TEMPERATURE: -20˚C to 70˚C

Materials

KNOB: PA

COVER: SUS

HOUSING: PA

CONTACT: Silver clad

TERMINAL: Silver plated

SS-12D01-G E NS 1P2T NON-SHORTING

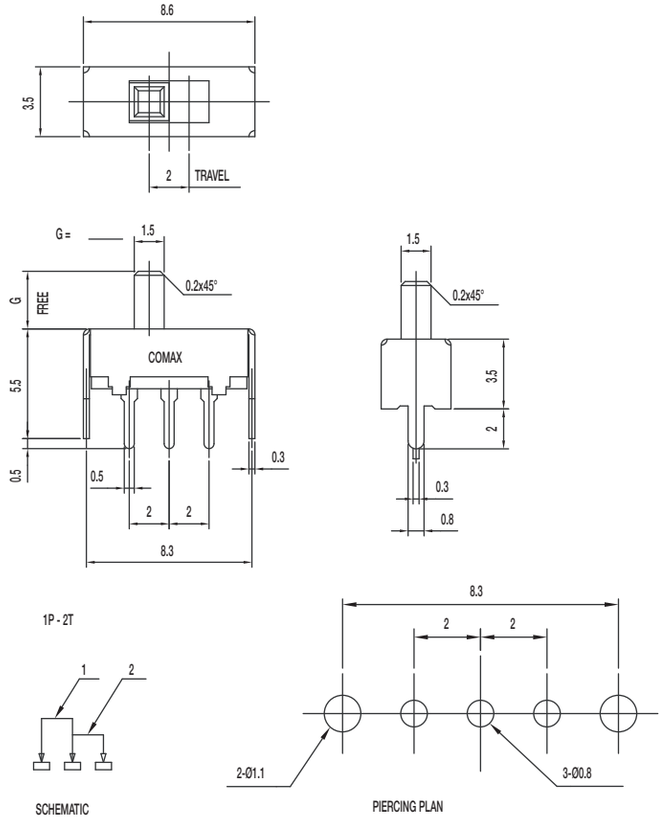

Specifications

CONTACT RATING: 0.3A @ 30 VDC

INITIAL CONTACT RESISTANCE: 30 m ohms max.

INSULATION RESISTANCE: 100 M ohms min.

DIELECTRIC STRENGTH: 500 V AC (50-60 Hz) between open terminals and between the frame and terminal.

OPERATING LIFE: 10,000 cycles with load

OPERATING FORCE: 200 ± 100 gf (1.96 ± 0.98N)

TRAVEL: 2 ± 0.3 mm

OPERATING TEMPERATURE: -20˚C to 70˚C

Materials

KNOB: POM

COVER: SUS

FRAME: SPTE

CONTACT: Silver clad

TERMINAL: Silver plated

SS-12D05-G E NS 1P2T NON-SHORTING

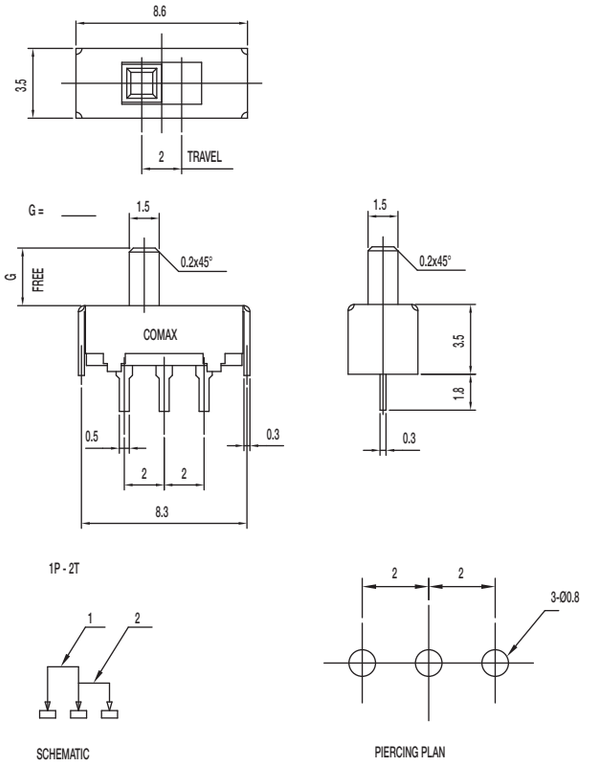

Specifications

CONTACT RATING: 0.3A @ 30 VDC

INITIAL CONTACT RESISTANCE: 30 m ohms max.

INSULATION RESISTANCE: 100 M ohms min.

DIELECTRIC STRENGTH: 500 V AC (50-60 Hz) between open terminals and between the frame and terminal.

OPERATING LIFE: 10,000 cycles with load

OPERATING FORCE: 200 ± 100 gf (1.96 ± 0.98N)

TRAVEL: 2 ± 0.3 mm

OPERATING TEMPERATURE: -20˚C to 70˚C

Materials

KNOB: POM

FRAME: SPTE

CONTACT: Silver clad

TERMINAL: Silver plated

SS-12D06-G E NS 1P2T NON-SHORTING

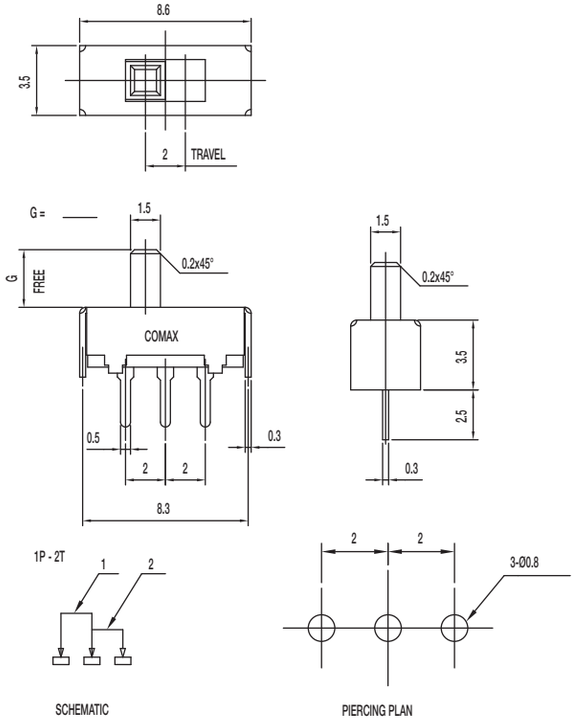

Specifications

CONTACT RATING: 0.3A @ 30 VDC

INITIAL CONTACT RESISTANCE: 30 m ohms max.

INSULATION RESISTANCE: 100 M ohms min.

DIELECTRIC STRENGTH: 500 V AC (50-60 Hz) between open terminals and between the frame and terminal.

OPERATING LIFE: 10,000 cycles with load

OPERATING FORCE: 200 ± 100 gf (1.96 ± 0.98N)

TRAVEL: 2 ± 0.3 mm

OPERATING TEMPERATURE: -20˚C to 70˚C

Materials

KNOB: POM

FRAME: SPTE

CONTACT: Silver clad

TERMINAL: Silver plated

SS Series
Miniature Slide Switches

SS-12D11-G E NS 1P2T NON-SHORTING

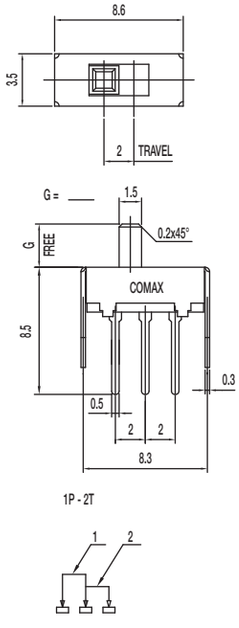

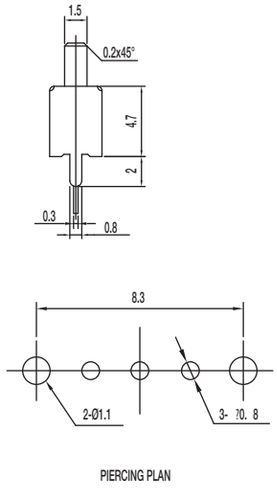

Specifications

CONTACT RATING: 0.3A @ 30 VDC

INITIAL CONTACT RESISTANCE: 30 m ohms max.

INSULATION RESISTANCE: 100 M ohms min.

DIELECTRIC STRENGTH: 500 V AC (50-60 Hz) between open terminals and between the frame and terminal.

OPERATING LIFE: 10,000 cycles with load

OPERATING FORCE: 200 ± 100 gf (1.96 ± 0.98N)

TRAVEL: 2 ± 0.3 mm

OPERATING TEMPERATURE: -20˚C to 70˚C

Materials

KNOB: POM

FRAME: SPTE

CONTACT: Silver clad

TERMINAL: Silver plated

SS-13D01-G 1P3T

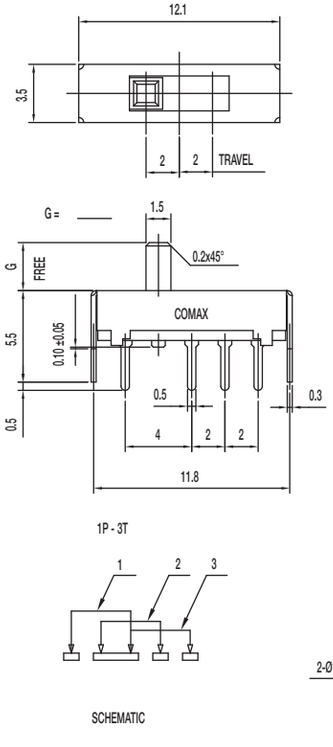

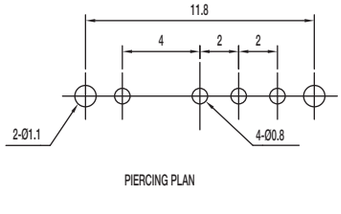

Specifications

CONTACT RATING: 0.3A @ 30 VDC

INITIAL CONTACT RESISTANCE: 30 m ohms max.

INSULATION RESISTANCE: 100 M ohms min.

DIELECTRIC STRENGTH: 500 V AC (50-60 Hz) between open terminals and between the frame and terminal.

OPERATING LIFE: 10,000 cycles with load

OPERATING FORCE: 200 ± 100 gf (1.96 ± 0.98N)
250 ± 100 gf (2.47 ± 0.98N)

TRAVEL: 2 ± 0.3 mm

OPERATING TEMPERATURE: -20˚C to 70˚C

Materials

KNOB: POM

FRAME: SPTE

CONTACT: Silver clad

TERMINAL: Silver plated

SS-13D04-G 1P3T

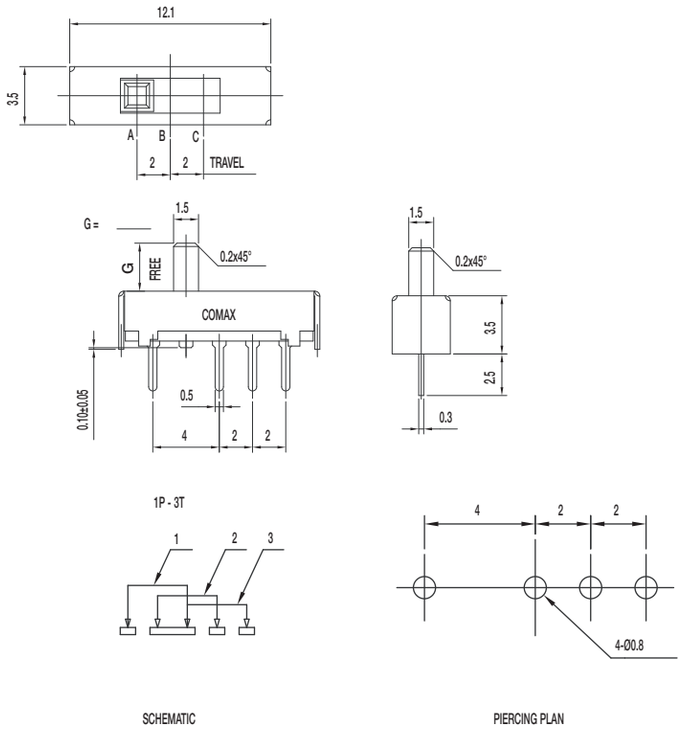

Specifications

CONTACT RATING: 0.3A @ 30 VDC

INITIAL CONTACT RESISTANCE: 30 m ohms max.

INSULATION RESISTANCE: 100 M ohms min.

DIELECTRIC STRENGTH: 500 V AC (50-60 Hz) between open terminals and between the frame and terminal.

OPERATING LIFE: 10,000 cycles with load

OPERATING FORCE: 200 ± 100 gf (1.96 ± 0.98N)
250 ± 100 gf (2.47 ± 0.98N)

TRAVEL: 2 ± 0.3 mm

OPERATING TEMPERATURE: -20˚C to 70˚C

Materials

KNOB: POM

FRAME: SPTE

CONTACT: Silver clad

TERMINAL: Silver plated

SS-22D28-G NS 2P2T NON-SHORTING

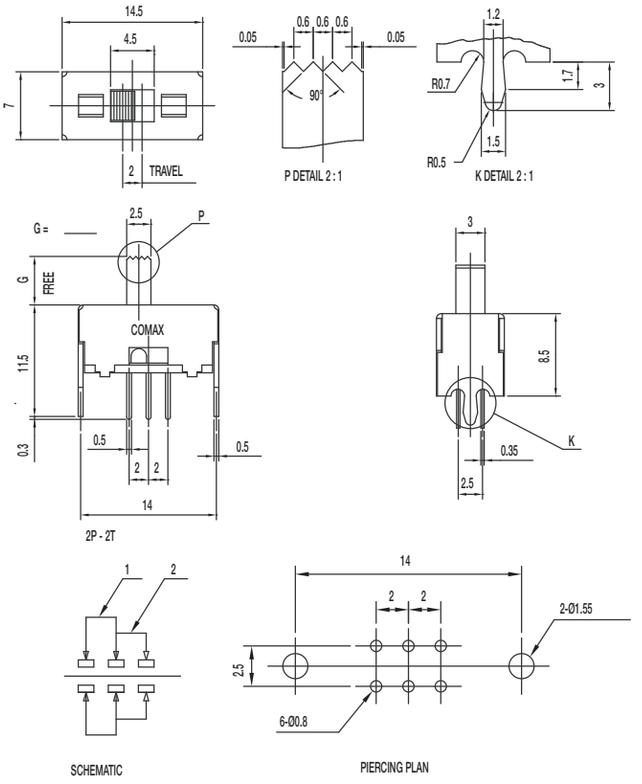

Specifications

CONTACT RATING: 0.3A @ 30 VDC

INITIAL CONTACT RESISTANCE: 30 m ohms max.

INSULATION RESISTANCE: 100 M ohms min.

DIELECTRIC STRENGTH: 500 V AC (50-60 Hz) between open terminals and between the frame and terminal.

OPERATING LIFE: 10,000 cycles with load

OPERATING FORCE: 200 ± 100 gf (1.96 ± 0.98N)

TRAVEL: 2 ± 0.3 mm

OPERATING TEMPERATURE: -20˚C to 70˚C

Materials

KNOB: POM

FRAME: SPCC

CONTACT: Silver clad

TERMINAL: Silver plated

SS Series
Miniature Slide Switches

SS-23D28-G NS 2P3T NON-SHORTING

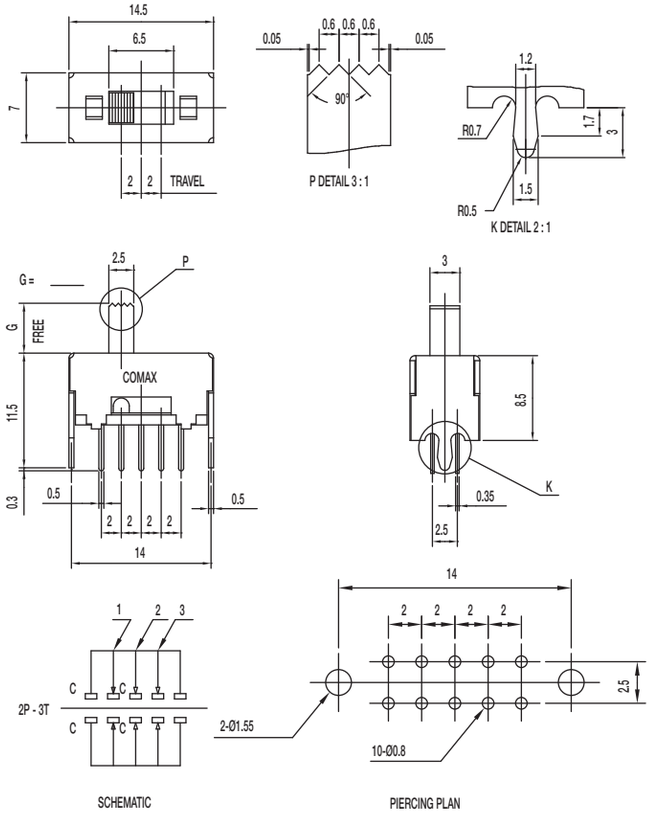

Specifications

CONTACT RATING: 0.3A @ 30 VDC

INITIAL CONTACT RESISTANCE: 30 m ohms max.

INSULATION RESISTANCE: 100 M ohms min.

DIELECTRIC STRENGTH: 500 V AC (50-60 Hz) between open terminals and between the frame and terminal.

OPERATING LIFE: 10,000 cycles with load

OPERATING FORCE: 200 ± 100 gf (1.96 ± 0.98N)
300 ± 150 gf (2.94 ± 1.47N)

TRAVEL: 2 ± 0.3 mm

OPERATING TEMPERATURE: -20˚C to 70˚C

Materials

KNOB: POM

FRAME: SPCC

CONTACT: Silver clad

TERMINAL: Silver plated

SS-24D28-G NS 2P4T NON-SHORTING

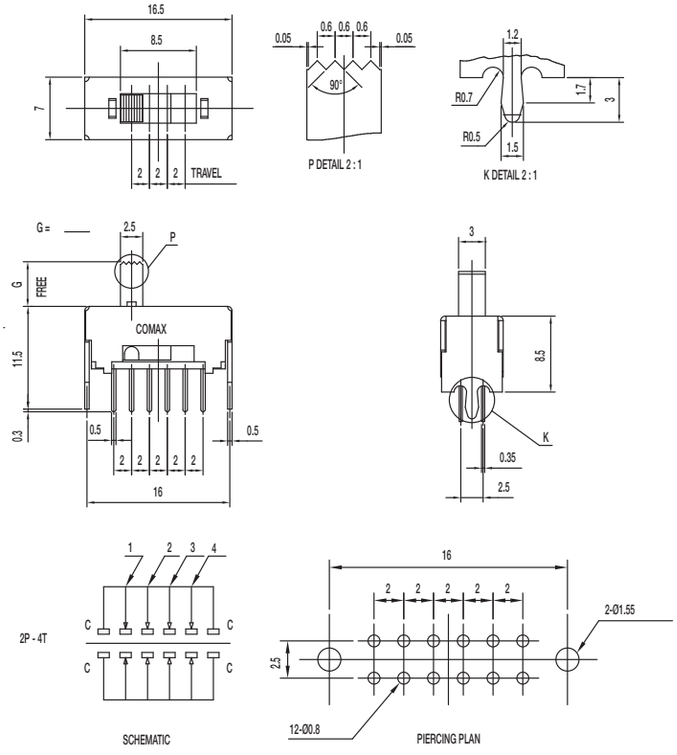

Specifications

CONTACT RATING: 0.3A @ 30 VDC

INITIAL CONTACT RESISTANCE: 30 m ohms max.

INSULATION RESISTANCE: 100 M ohms min.

DIELECTRIC STRENGTH: 500 V AC (50-60 Hz) between open terminals and between the frame and terminal.

OPERATING LIFE: 10,000 cycles with load

OPERATING FORCE: 200 ± 100 gf (1.96 ± 0.98N)
250 ± 100 gf (2.45 ± 0.98N); 300 ± 100 gf (2.94 ± 0.98N)

TRAVEL: 2 ± 0.3 mm

OPERATING TEMPERATURE: -20˚C to 70˚C

Materials

KNOB: POM

FRAME: SPCC

CONTACT: Silver clad

TERMINAL: Silver plated

SS-42D28-G NS 4P2T NON-SHORTING

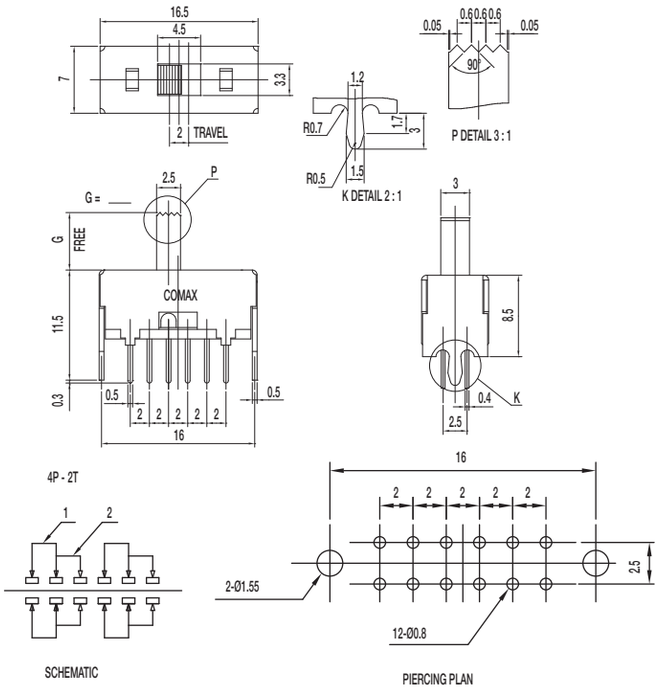

Specifications

CONTACT RATING: 0.3A @ 30 VDC

INITIAL CONTACT RESISTANCE: 30 m ohms max.

INSULATION RESISTANCE: 100 M ohms min.

DIELECTRIC STRENGTH: 500 V AC (50-60 Hz) between open terminals and between the frame and terminal.

OPERATING LIFE: 10,000 cycles with load

OPERATING FORCE: 200 ± 100 gf (1.96 ± 0.98N)

TRAVEL: 2 ± 0.3 mm

OPERATING TEMPERATURE: -20˚C to 70˚C

Materials

KNOB: POM

FRAME: SPCC

CONTACT: Silver clad

TERMINAL: Silver plated

SS-43D28-G NS 4P3T NON-SHORTING

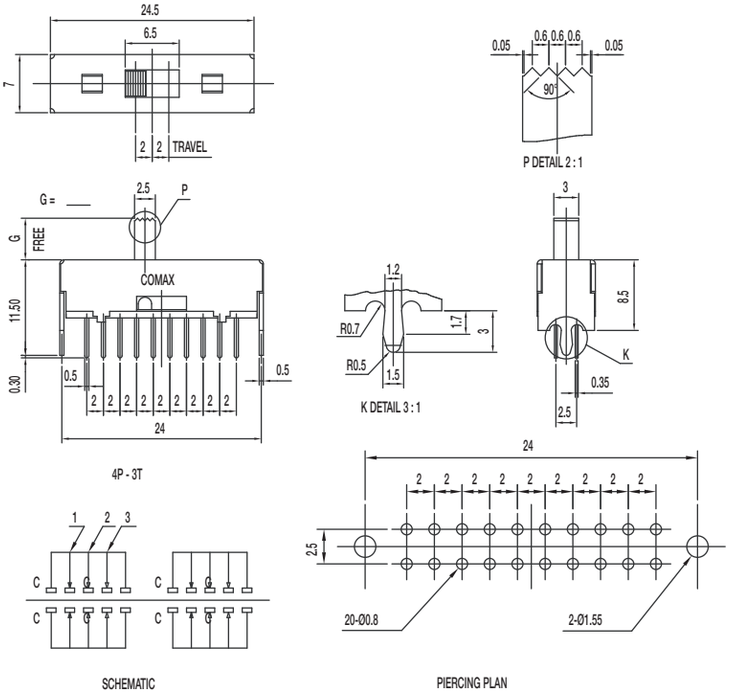

Specifications

CONTACT RATING: 0.3A @ 30 VDC

INITIAL CONTACT RESISTANCE: 30 m ohms max.

INSULATION RESISTANCE: 100 M ohms min.

DIELECTRIC STRENGTH: 500 V AC (50-60 Hz) between open terminals and between the frame and terminal.

OPERATING LIFE: 10,000 cycles with load

OPERATING FORCE: 200 ± 100 gf (1.96 ± 0.98N)
300 ± 150 gf (2.94 ± 1.47N)

TRAVEL: 2 ± 0.3 mm

OPERATING TEMPERATURE: -20˚C to 70˚C

Materials

KNOB: POM

FRAME: SPCC

CONTACT: Silver clad

TERMINAL: Silver plated

SS Series
Miniature Slide Switches

SS-23D32-HG NS 2P3T NON-SHORTING

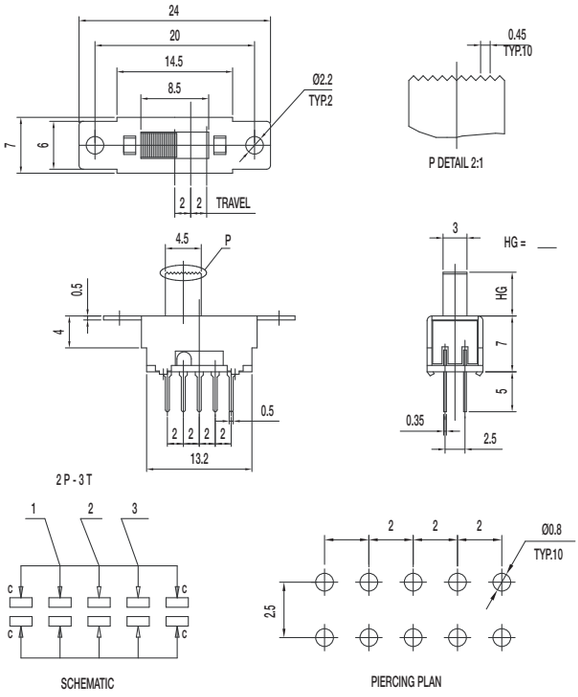

Specifications

CONTACT RATING: 0.3A @ 30 VDC

INITIAL CONTACT RESISTANCE: 30 m ohms max.

INSULATION RESISTANCE: 100 M ohms min.

DIELECTRIC STRENGTH: 500 V AC (50-60 Hz) between open terminals and between the frame and terminal.

OPERATING LIFE: 10,000 cycles with load

OPERATING FORCE: 200 ± 100 gf (1.96 ± 0.98N)
300 ± 100 gf (2.94 ± 0.98N)

TRAVEL: 2 ± 0.3 mm

OPERATING TEMPERATURE: -20˚C to 70˚C

Materials

KNOB: POM

FRAME: SPCC

CONTACT: Silver clad

TERMINAL: Silver plated

SS-23D33-HG NS 2P3T NON-SHORTING

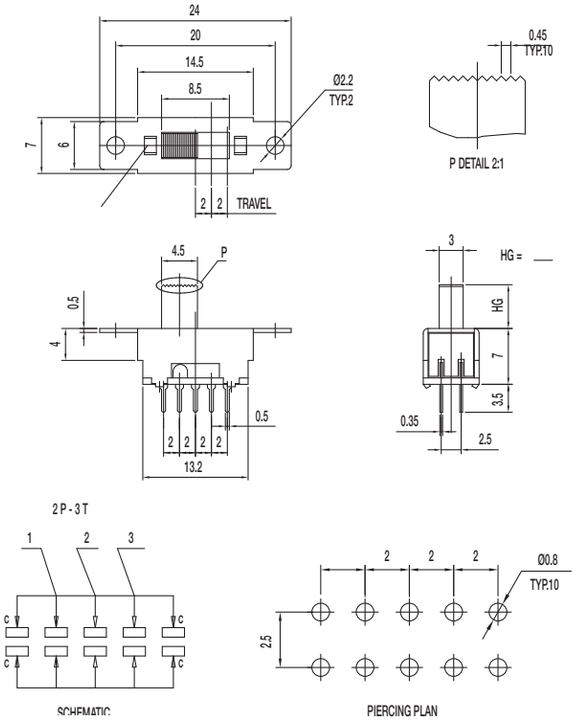

Specifications

CONTACT RATING: 0.3A @ 30 VDC

INITIAL CONTACT RESISTANCE: 30 m ohms max.

INSULATION RESISTANCE: 100 M ohms min.

DIELECTRIC STRENGTH: 500 V AC (50-60 Hz) between open terminals and between the frame and terminal.

OPERATING LIFE: 10,000 cycles with load

OPERATING FORCE: 200 ± 100 gf (1.96 ± 0.98N)
300 ± 100 gf (2.94 ± 0.98N)

TRAVEL: 2 ± 0.3 mm

OPERATING TEMPERATURE: -20˚C to 70˚C

Materials

KNOB: POM

FRAME: SPCC

CONTACT: Silver clad

TERMINAL: Silver plated

SS-23D37-G NS 2P3T NON-SHORTING

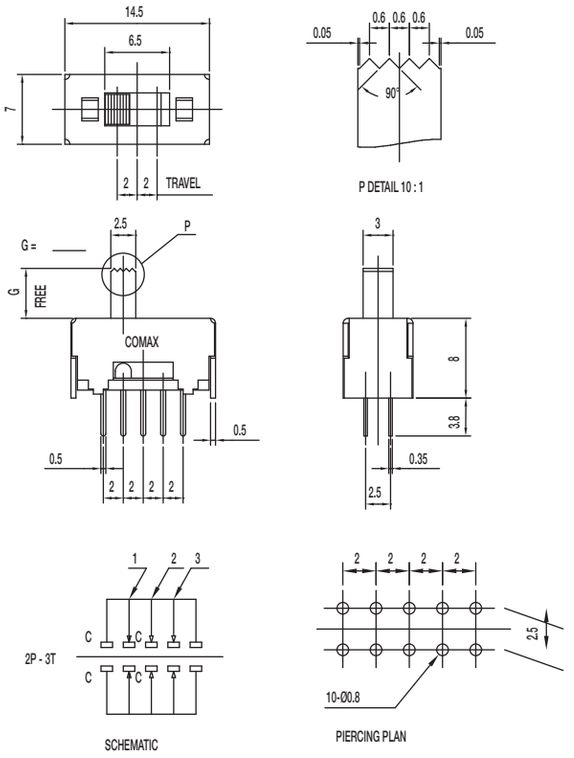

Specifications

CONTACT RATING: 0.3A @ 30 VDC

INITIAL CONTACT RESISTANCE: 30 m ohms max.

INSULATION RESISTANCE: 100 M ohms min.

DIELECTRIC STRENGTH: 500 V AC (50-60 Hz) between open terminals and between the frame and terminal.

OPERATING LIFE: 10,000 cycles with load

OPERATING FORCE: 200 ± 100 gf (1.96 ± 0.98N)
300 ± 100 gf (2.94 ± 0.98N)

TRAVEL: 2 ± 0.3 mm

OPERATING TEMPERATURE: -10˚C to 60˚C

Materials

KNOB: POM

FRAME: SPCC

CONTACT: Silver clad

TERMINAL: Silver plated

SS-23D47-G NS 2P3T NON-SHORTING

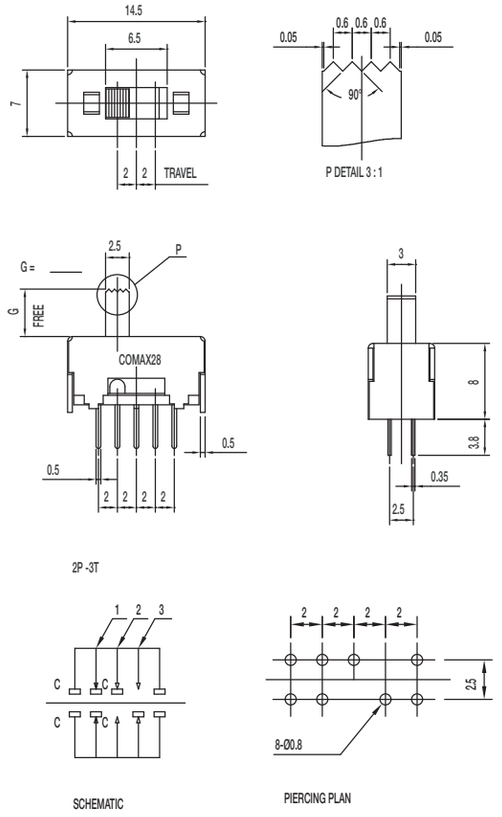

Specifications

CONTACT RATING: 0.3A @ 30 VDC

INITIAL CONTACT RESISTANCE: 30 m ohms max.

INSULATION RESISTANCE: 100 M ohms min.

DIELECTRIC STRENGTH: 500 V AC (50-60 Hz) between open terminals and between the frame and terminal.

OPERATING LIFE: 10,000 cycles with load

OPERATING FORCE: 200 ± 100 gf (1.96 ± 0.98N)
300 ± 100 gf (2.94 ± 0.98N)

TRAVEL: 2 ± 0.3 mm

OPERATING TEMPERATURE: -20˚C to 70˚C

Materials

KNOB: POM

FRAME: SPCC

CONTACT: Silver clad

TERMINAL: Silver plated

SS Series
Miniature Slide Switches

SS-12F28-G NS 1P2T NON-SHORTING

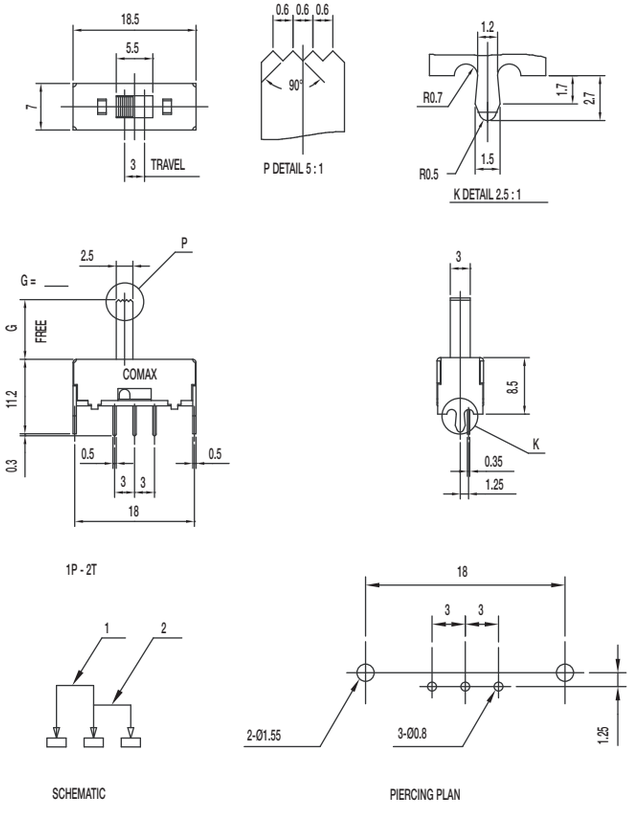

Specifications

CONTACT RATING: 0.3A @ 30 VDC

INITIAL CONTACT RESISTANCE: 30 m ohms max.

INSULATION RESISTANCE: 100 M ohms min.

DIELECTRIC STRENGTH: 500 V AC (50-60 Hz) between open terminals and between the frame and terminal.

OPERATING LIFE: 10,000 cycles with load

OPERATING FORCE: 200 ± 100 gf (1.96 ± 0.98N)

TRAVEL: 3 ± 0.3 mm

OPERATING TEMPERATURE: -20˚C to 70˚C

Materials

KNOB: POM

FRAME: SPCC

CONTACT: Silver clad

TERMINAL: Silver plated

SS-13F28-G NS 1P3T NON-SHORTING

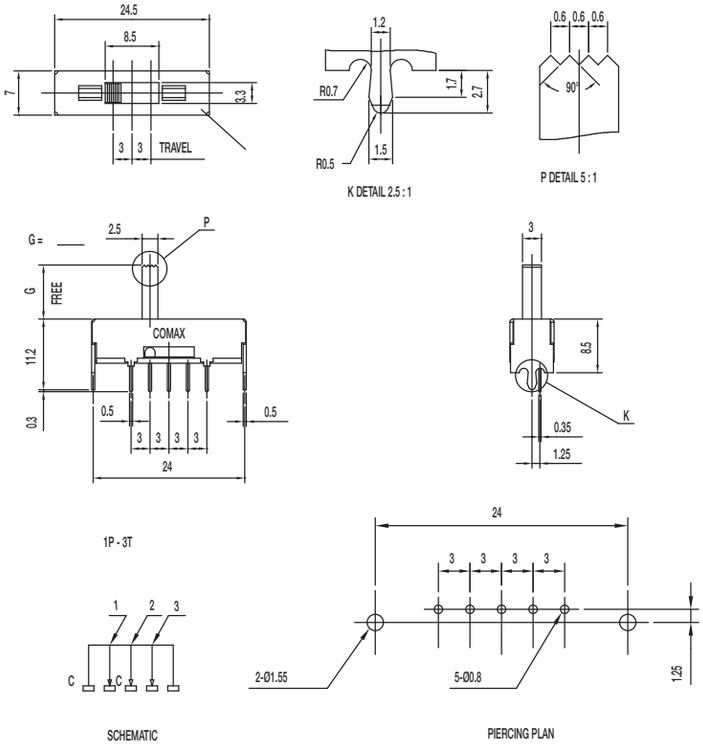

Specifications

CONTACT RATING: 0.3A @ 30 VDC

INITIAL CONTACT RESISTANCE: 30 m ohms max.

INSULATION RESISTANCE: 100 M ohms min.

DIELECTRIC STRENGTH: 500 V AC (50-60 Hz) between open terminals and between the frame and terminal.

OPERATING LIFE: 10,000 cycles with load

OPERATING FORCE: 180 ± 50 gf (1.76 ± 0.49N)
220 ± 100 gf (2.16 ± 0.98N)

TRAVEL: 3 ± 0.3 mm

OPERATING TEMPERATURE: -20˚C to 70˚C

Materials

KNOB: POM

FRAME: SPCC

CONTACT: Silver clad

TERMINAL: Silver plated

Dimensions are shown: mm
Specifications and dimensions subject to change

SS-22F28-G S DPDT SHORTING

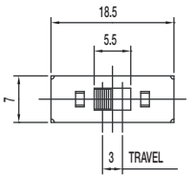

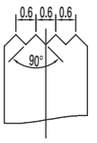

P DETAIL 5 : 1

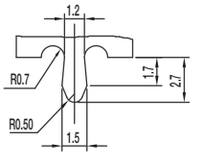

K DETAIL 2.5 : 1

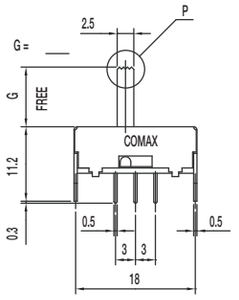

2P - 2T

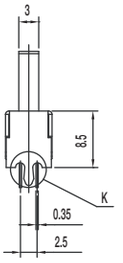

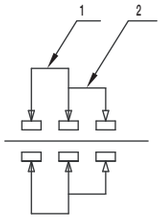

SCHEMATIC

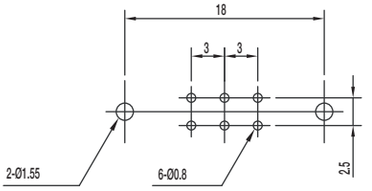

PIERCING PLAN

Specifications

CONTACT RATING: 0.3A @ 30 VDC

INITIAL CONTACT RESISTANCE: 30 m ohms max.

INSULATION RESISTANCE: 100 M ohms min.

DIELECTRIC STRENGTH: 500 V AC (50-60 Hz) between open terminals and between the frame and terminal.

OPERATING LIFE: 10,000 cycles with load

OPERATING FORCE: 200 ± 100 gf (1.96 ± 0.98N)

TRAVEL: 3 ± 0.3 mm

OPERATING TEMPERATURE: -20˚C to 70˚C

Materials

KNOB: POM

FRAME: SPCC

CONTACT: Silver clad

TERMINAL: Silver plated

SS-23F28-G 6 NS 2P3T NON-SHORTING

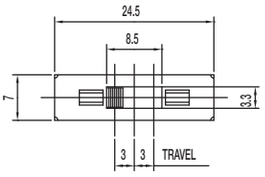

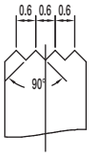

P DETAIL 5 : 1

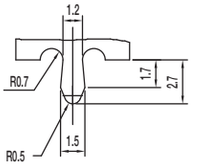

K DETAIL 2.5 : 1

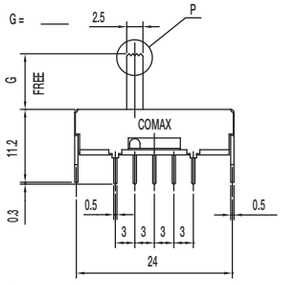

2P - 3T

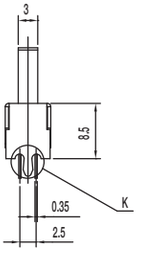

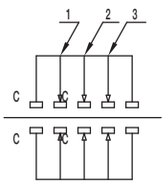

SCHEMATIC

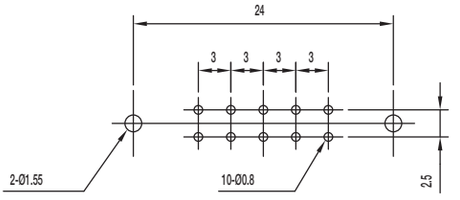

PIERCING PLAN

Specifications

CONTACT RATING: 0.3A @ 30 VDC

INITIAL CONTACT RESISTANCE: 30 m ohms max.

INSULATION RESISTANCE: 100 M ohms min.

DIELECTRIC STRENGTH: 500 V AC (50-60 Hz) between open terminals and between the frame and terminal.

OPERATING LIFE: 10,000 cycles with load

OPERATING FORCE: 180 ± 50 gf (1.76 ± 0.49N) (A->B / C->B)
220 ± 100 gf (2.16 ± 0.98N) (B->C / B->A)

TRAVEL: 3 ± 0.3 mm

OPERATING TEMPERATURE: -20˚C to 70˚C

KNOB LENGTH: 6mm

Materials

KNOB: POM

FRAME: SPCC

CONTACT: Silver clad

TERMINAL: Silver plated

SS Series
Miniature Slide Switches

SS-24F28-G 2P4T NON-SHORTING

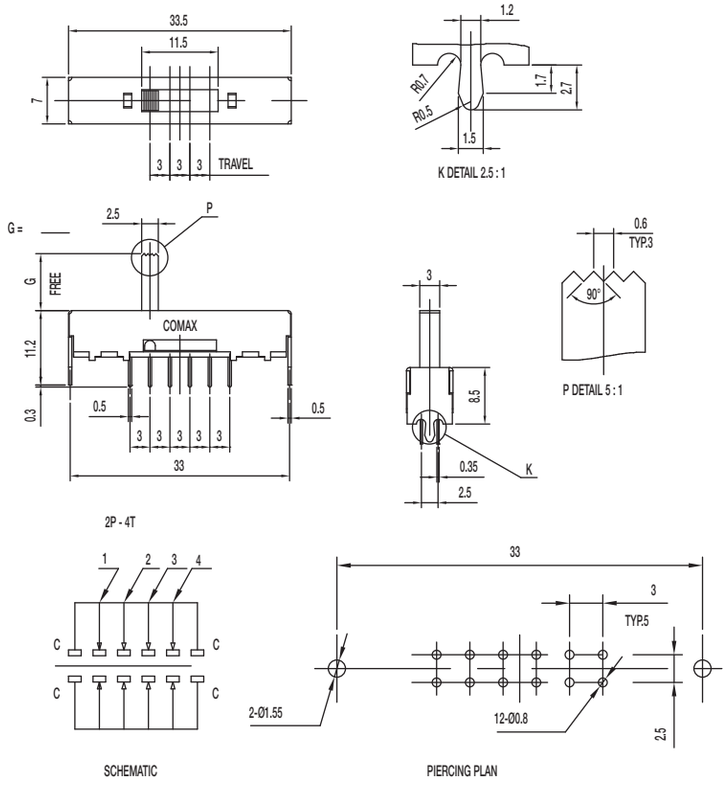

Specifications

CONTACT RATING: 0.3A @ 30 VDC

INITIAL CONTACT RESISTANCE: 30 m ohms max.

INSULATION RESISTANCE: 100 M ohms min.

DIELECTRIC STRENGTH: 500 V AC (50-60 Hz) between open terminals and between the frame and terminal.

OPERATING LIFE: 10,000 cycles with load

OPERATING FORCE: 200 ± 100 gf (1.96 ± 0.98N)
250 ± 100 gf (2.45 ± 0.98N)

TRAVEL: 3 ± 0.3 mm

OPERATING TEMPERATURE: -20˚C to 70˚C

Materials

KNOB: POM

FRAME: SPCC

CONTACT: Silver clad

TERMINAL: Silver plated

SS-42F28-G NS 4P2T NON-SHORTING

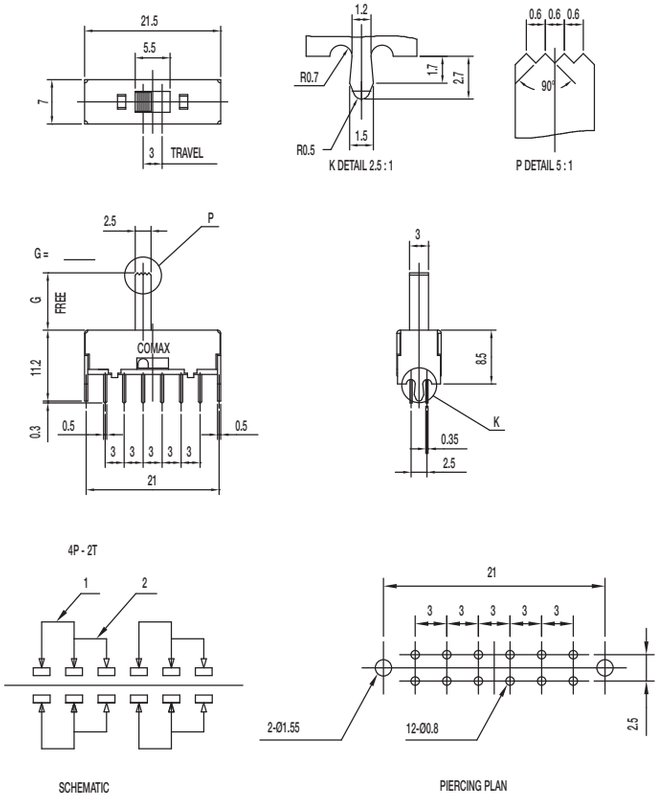

Specifications

CONTACT RATING: 0.3A @ 30 VDC

INITIAL CONTACT RESISTANCE: 30 m ohms max.

INSULATION RESISTANCE: 100 M ohms min.

DIELECTRIC STRENGTH: 500 V AC (50-60 Hz) between open terminals and between the frame and terminal.

OPERATING LIFE: 10,000 cycles with load

OPERATING FORCE: 200 ± 100 gf (1.96 ± 0.98N)

TRAVEL: 3 ± 0.3 mm

OPERATING TEMPERATURE: -20˚C to 70˚C

Materials

KNOB: POM

FRAME: SPCC

CONTACT: Silver clad

TERMINAL: Silver plated

Dimensions are shown: mm
Specifications and dimensions subject to change

SS-43F28-G NS 4P3T NON-SHORTING

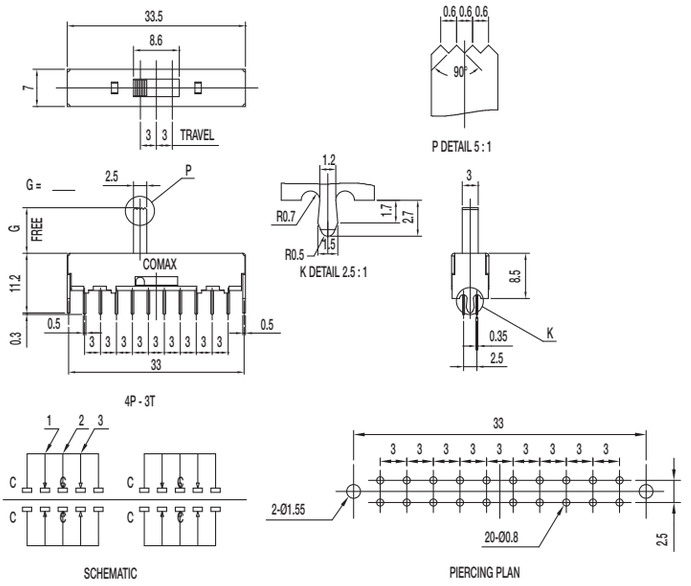

Specifications

CONTACT RATING: 0.3A @ 30 VDC
INITIAL CONTACT RESISTANCE: 30 m ohms max.
INSULATION RESISTANCE: 100 M ohms min.
DIELECTRIC STRENGTH: 500 V AC (50-60 Hz) between open terminals and between the frame and terminal.
OPERATING LIFE: 10,000 cycles with load
OPERATING FORCE: 200 ± 100 gf (1.96 ± 0.98N)
250 ± 100 gf (2.45 ± 0.98N)
TRAVEL: 3 ± 0.3 mm
OPERATING TEMPERATURE: -20˚C to 70˚C

Materials

KNOB: POM
FRAME: SPCC
CONTACT: Silver clad
TERMINAL: Silver plated

SS-44F28-G NS 4P4T NON-SHORTING

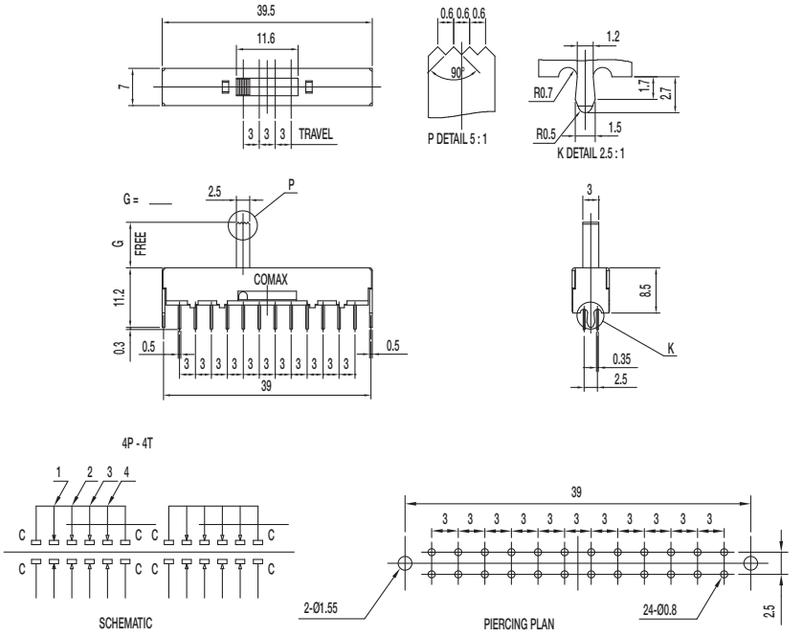

Specifications

CONTACT RATING: 0.3A @ 30 VDC
INITIAL CONTACT RESISTANCE: 30 m ohms max.
INSULATION RESISTANCE: 100 M ohms min.
DIELECTRIC STRENGTH: 500 V AC (50-60 Hz) between open terminals and between the frame and terminal.
OPERATING LIFE: 10,000 cycles with load
OPERATING FORCE: 200 ± 100 gf (1.96 ± 0.98N)
250 ± 100 gf (2.45 ± 0.98N)
TRAVEL: 3 ± 0.3 mm
OPERATING TEMPERATURE: -20˚C to 70˚C

Materials

KNOB: POM
FRAME: SPCC
CONTACT: Silver clad
TERMINAL: Silver plated

SS Series
Miniature Slide Switches

SS-12D04-VG NS 1P2T NON-SHORTING

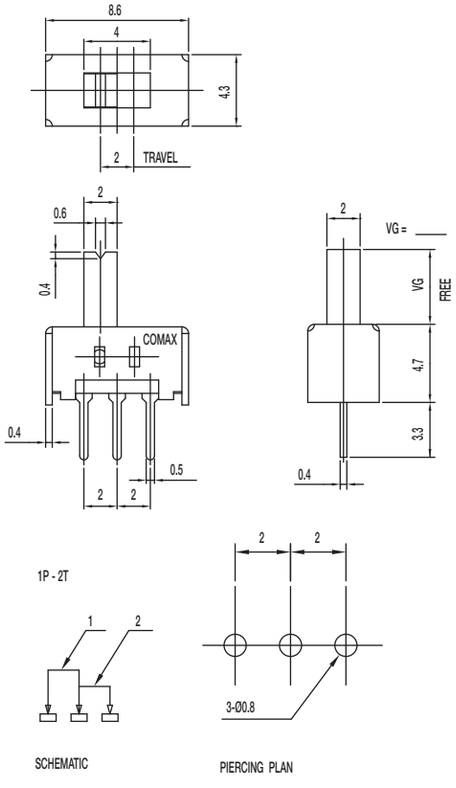

Specifications

CONTACT RATING: 0.3A @ 30 VDC

INITIAL CONTACT RESISTANCE: 30 m ohms max.

INSULATION RESISTANCE: 100 M ohms min.

DIELECTRIC STRENGTH: 500 V AC (50-60 Hz) between open terminals and between the frame and terminal.

OPERATING LIFE: 10,000 cycles with load

OPERATING FORCE: 200 ± 100 gf (1.96 ± 0.98N)

TRAVEL: 2 ± 0.3 mm

OPERATING TEMPERATURE: -20˚C to 70˚C

Materials

KNOB: POM

FRAME: SPTE

CONTACT: Silver clad

TERMINAL: Silver plated

SS-12D07-G NS 1P2T NON-SHORTING

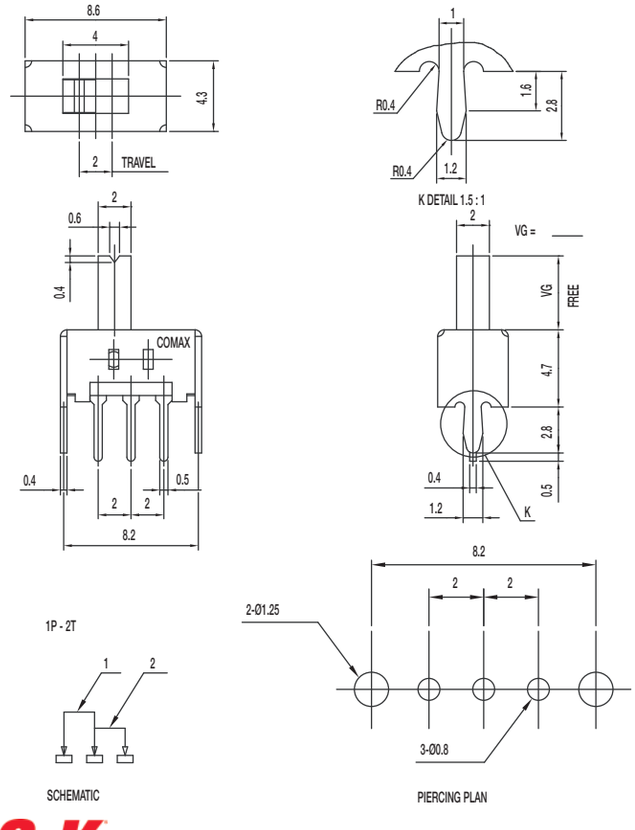

Specifications

CONTACT RATING: 0.3A @ 30 VDC

INITIAL CONTACT RESISTANCE: 30 m ohms max.

INSULATION RESISTANCE: 100 M ohms min.

DIELECTRIC STRENGTH: 500 V AC (50-60 Hz) between open terminals and between the frame and terminal.

OPERATING LIFE: 10,000 cycles with load

OPERATING FORCE: 250 ± 100 gf (2.45 ± 0.98N)

TRAVEL: 2 ± 0.3 mm

OPERATING TEMPERATURE: -20˚C to 70˚C

Materials

KNOB: POM

FRAME: SPCC

CONTACT: Silver clad

TERMINAL: Silver plated

Dimensions are shown: mm
Specifications and dimensions subject to change

SS-12D17-VG NS 1P2T NON-SHORTING

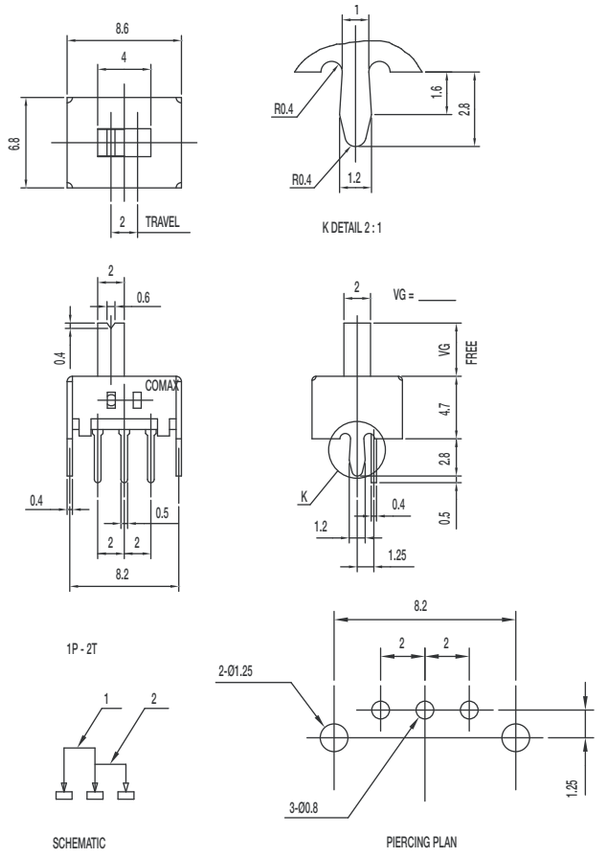

Specifications

CONTACT RATING: 0.3A @ 30 VDC

INITIAL CONTACT RESISTANCE: 30 m ohms max.

INSULATION RESISTANCE: 100 M ohms min.

DIELECTRIC STRENGTH: 500 V AC (50-60 Hz) between open terminals and between the frame and terminal.

OPERATING LIFE: 10,000 cycles with load

OPERATING FORCE: 250 ± 100 gf (2.45 ± 0.98N)

TRAVEL: 2 ± 0.3 mm

OPERATING TEMPERATURE: -20˚C to 70˚C

Materials

KNOB: POM

FRAME: SPCC

CONTACT: Silver clad

TERMINAL: Silver plated

SS-12H16-VG 1P2T NON-SHORTING

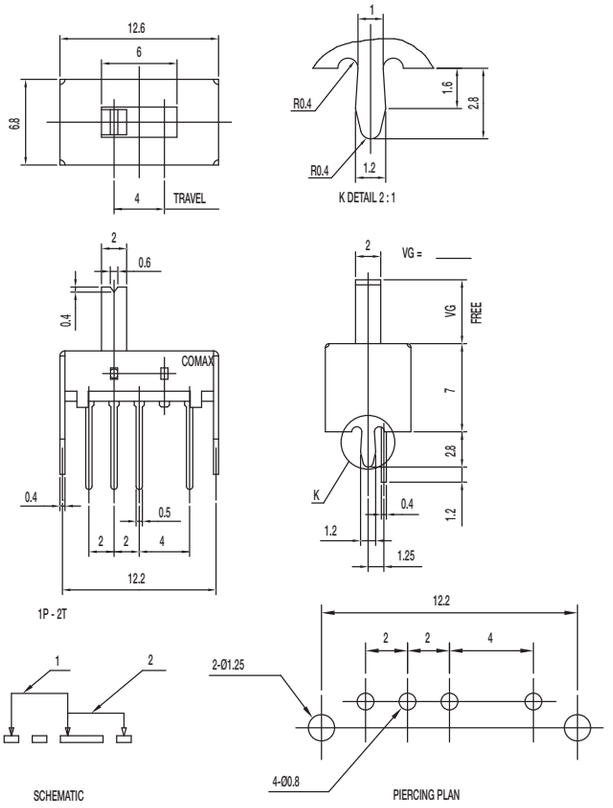

Specifications

CONTACT RATING: 0.3A @ 30 VDC

INITIAL CONTACT RESISTANCE: 30 m ohms max.

INSULATION RESISTANCE: 100 M ohms min.

DIELECTRIC STRENGTH: 500 V AC (50-60 Hz) between open terminals and between the frame and terminal.

OPERATING LIFE: 10,000 cycles with load

OPERATING FORCE: 200 ± 100 gf (1.96 ± 0.98N)

TRAVEL: 4 ± 0.3 mm

OPERATING TEMPERATURE: -20˚C to 70˚C

Materials

KNOB: POM

FRAME: SPCC

CONTACT: Silver clad

TERMINAL: Silver plated

SS Series
Miniature Slide Switches

SS-12H26-VG 1P2T NON-SHORTING

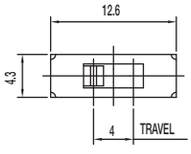

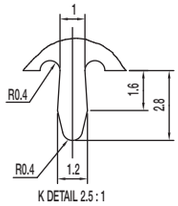

K DETAIL 2.5 : 1

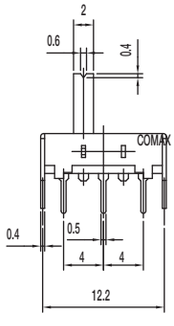

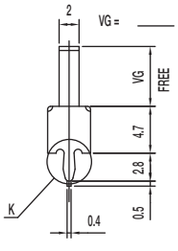

1P - 2T

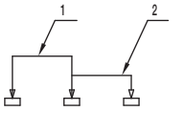

SCHEMATIC

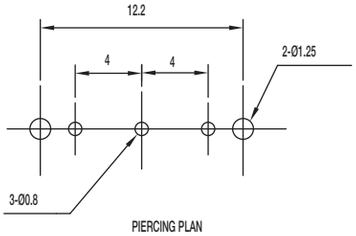

PIERCING PLAN

Specifications

CONTACT RATING: 0.3A @ 30 VDC

INITIAL CONTACT RESISTANCE: 30 m ohms max.

INSULATION RESISTANCE: 100 M ohms min.

DIELECTRIC STRENGTH: 500 V AC (50-60 Hz) between open terminals and between the frame and terminal.

OPERATING LIFE: 10,000 cycles with load

OPERATING FORCE: 150 ± 100 gf (1.47 ± 0.98N)

TRAVEL: 2 ± 0.3 mm

OPERATING TEMPERATURE: -20˚C to 70˚C

Materials

KNOB: POM

FRAME: SPCC

CONTACT: Silver clad

TERMINAL: Silver plated

SS-13D06-VG 1P3T

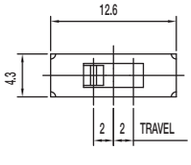

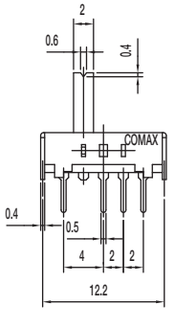

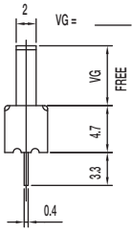

1P - 3T

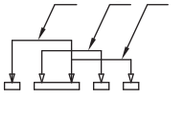

SCHEMATIC

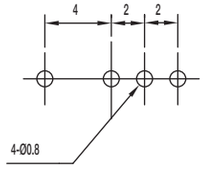

PIERCING PLAN

Specifications

CONTACT RATING: 0.3A @ 30 VDC

INITIAL CONTACT RESISTANCE: 30 m ohms max.

INSULATION RESISTANCE: 100 M ohms min.

DIELECTRIC STRENGTH: 500 V AC (50-60 Hz) between open terminals and between the frame and terminal.

OPERATING LIFE: 10,000 cycles with load

OPERATING FORCE: 200 ± 100 gf (1.96 ± 0.98N)
250 ± 100 gf (2.45 ± 0.98N)

TRAVEL: 2 ± 0.3 mm

OPERATING TEMPERATURE: -20˚C to 70˚C

Materials

KNOB: POM

FRAME: SPCC

CONTACT: Silver clad

TERMINAL: Silver plated

Dimensions are shown: mm
Specifications and dimensions subject to change

SS-13D08-VG 1P3T

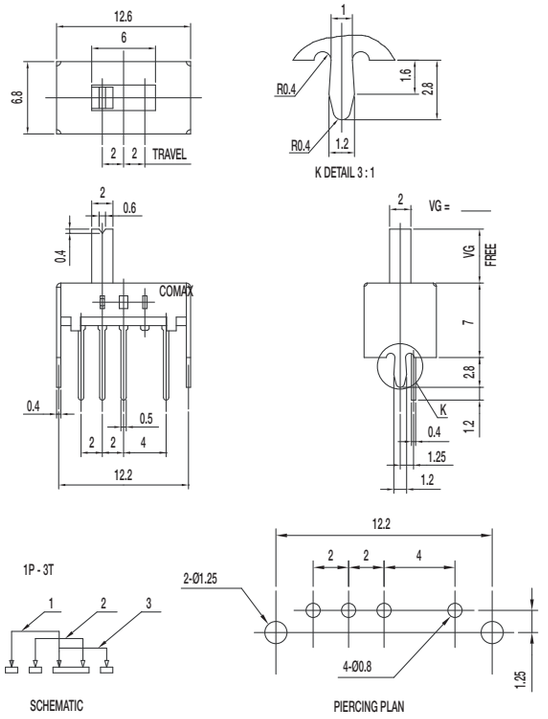

Specifications

CONTACT RATING: 0.3A @ 30 VDC

INITIAL CONTACT RESISTANCE: 30 m ohms max.

INSULATION RESISTANCE: 100 M ohms min.

DIELECTRIC STRENGTH: 500 V AC (50-60 Hz) between open terminals and between the frame and terminal.

OPERATING LIFE: 10,000 cycles with load

OPERATING FORCE: 150 ± 50 gf (1.47 ± 0.49N)
200 ± 100 gf (1.96 ± 0.98N)

TRAVEL: 2 ± 0.3 mm

OPERATING TEMPERATURE: -20˚C to 70˚C

Materials

KNOB: POM

FRAME: SPCC

CONTACT: Silver clad

TERMINAL: Silver plated

SS-13D16-VG 1P3T

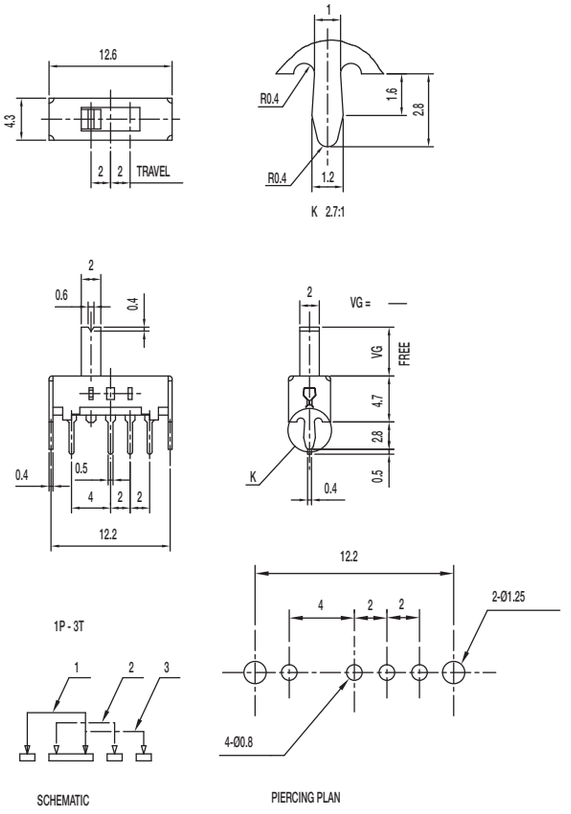

Specifications

CONTACT RATING: 0.3A @ 30 VDC

INITIAL CONTACT RESISTANCE: 30 m ohms max.

INSULATION RESISTANCE: 100 M ohms min.

DIELECTRIC STRENGTH: 500 V AC (50-60 Hz) between open terminals and between the frame and terminal.

OPERATING LIFE: 10,000 cycles with load

OPERATING FORCE: 200 ± 100 gf (1.96 ± 0.98N)
250 ± 100 gf (2.45 ± 0.98N)

TRAVEL: 2 ± 0.3 mm

OPERATING TEMPERATURE: -20˚C to 70˚C

Materials

KNOB: POM

FRAME: SPCC

CONTACT: Silver clad

TERMINAL: Silver plated

SS Series
Miniature Slide Switches

SS-14D01-VG 1P4T

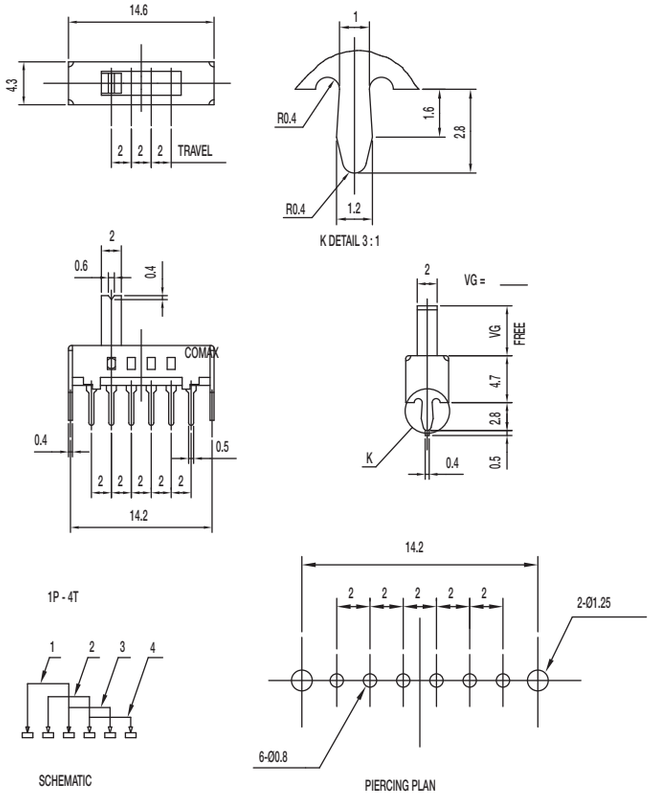

Specifications

CONTACT RATING: 0.3A @ 30 VDC

INITIAL CONTACT RESISTANCE: 30 m ohms max.

INSULATION RESISTANCE: 100 M ohms min.

DIELECTRIC STRENGTH: 500 V AC (50-60 Hz) between open terminals and between the frame and terminal.

OPERATING LIFE: 10,000 cycles with load

OPERATING FORCE: 200 ± 100 gf (1.96 ± 0.98N)

TRAVEL: 2 ± 0.3 mm

OPERATING TEMPERATURE: -20˚C to 70˚C

Materials

KNOB: POM

FRAME: SPCC

CONTACT: Silver clad

TERMINAL: Silver plated

SS-14D07-VG 1P4T

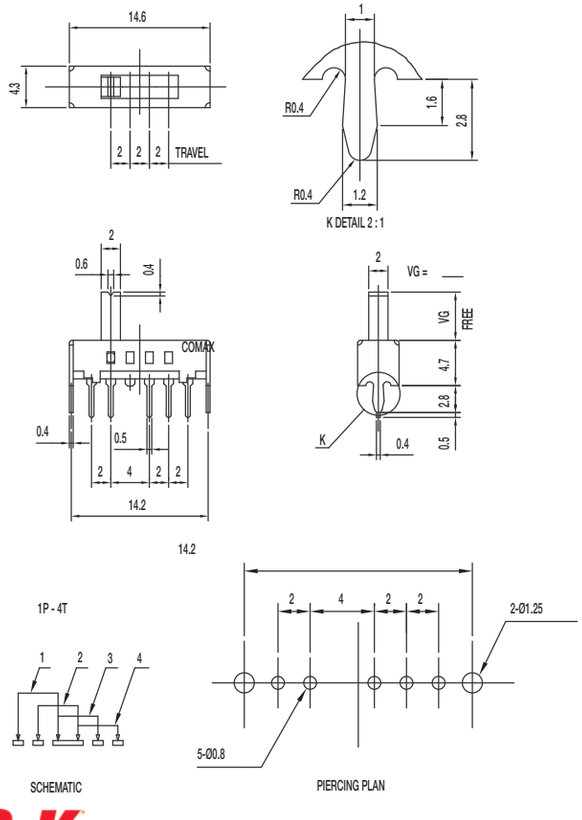

Specifications

CONTACT RATING: 0.3A @ 30 VDC

INITIAL CONTACT RESISTANCE: 30 m ohms max.

INSULATION RESISTANCE: 100 M ohms min.

DIELECTRIC STRENGTH: 500 V AC (50-60 Hz) between open terminals and between the frame and terminal.

OPERATING LIFE: 10,000 cycles with load

OPERATING FORCE: 200 ± 100 gf (1.96 ± 0.98N)

TRAVEL: 2 ± 0.3 mm

OPERATING TEMPERATURE: -20˚C to 70˚C

Materials

KNOB: POM

FRAME: SPCC

CONTACT: Silver clad

TERMINAL: Silver plated

Dimensions are shown: mm
Specifications and dimensions subject to change

SS-22D07-VG S DPDT SHORTING

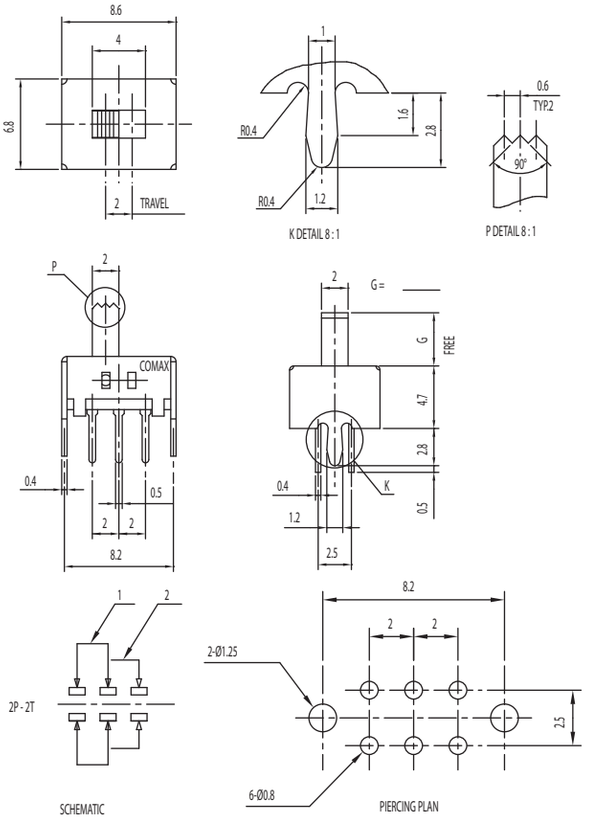

Specifications

CONTACT RATING: 0.3A @ 30 VDC
INITIAL CONTACT RESISTANCE: 30 m ohms max.
INSULATION RESISTANCE: 100 M ohms min.
DIELECTRIC STRENGTH: 500 V AC (50-60 Hz) between open terminals and between the frame and terminal.
OPERATING LIFE: 10,000 cycles with load
OPERATING FORCE: 250 ± 100 gf (2.45 ± 0.98N)
TRAVEL: 2 ± 0.3 mm
OPERATING TEMPERATURE: -20˚C to 70˚C

Materials

KNOB: POM
FRAME: SPCC
CONTACT: Silver clad
TERMINAL: Silver plated

SS-22H08-G DPDT NON-SHORTING

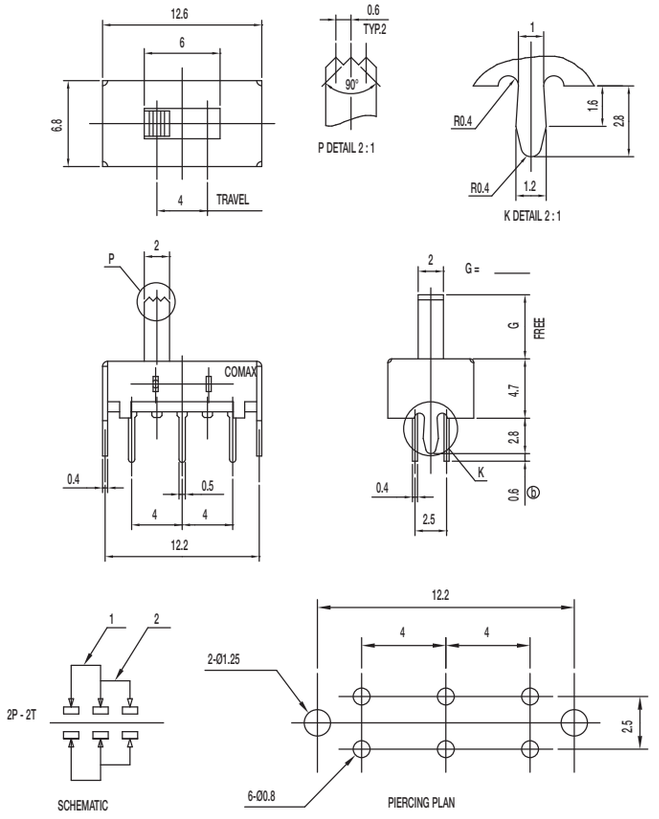

Specifications

CONTACT RATING: 0.3A @ 30 VDC
INITIAL CONTACT RESISTANCE: 30 m ohms max.
INSULATION RESISTANCE: 100 M ohms min.
DIELECTRIC STRENGTH: 500 V AC (50-60 Hz) between open terminals and between the frame and terminal.
OPERATING LIFE: 10,000 cycles with load
OPERATING FORCE: 200 ± 100 gf (1.96 ± 0.98N)
TRAVEL: 4 ± 0.3 mm
OPERATING TEMPERATURE: -20˚C to 70˚C

Materials

KNOB: POM
FRAME: SPCC
CONTACT: Silver clad
TERMINAL: Silver plated

Dimensions are shown: mm
Specifications and dimensions subject to change

SS Series
Miniature Slide Switches

SS-22H16-G DPDT NON-SHORTING

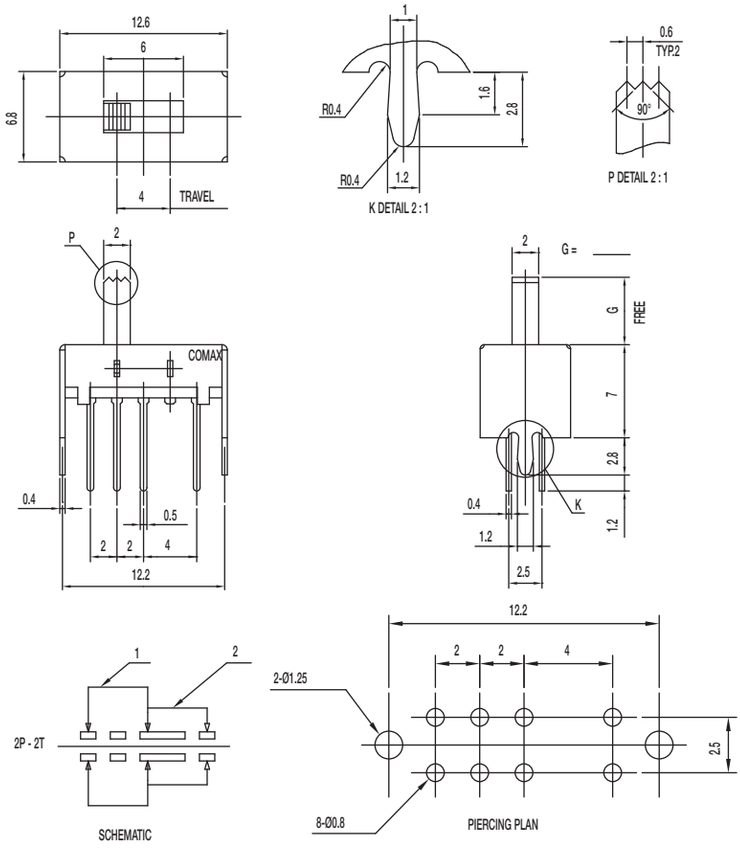

Specifications

CONTACT RATING: 0.3A @ 30 VDC

INITIAL CONTACT RESISTANCE: 30 m ohms max.

INSULATION RESISTANCE: 100 M ohms min.

DIELECTRIC STRENGTH: 500 V AC (50-60 Hz) between open terminals and between the frame and terminal.

OPERATING LIFE: 10,000 cycles with load

OPERATING FORCE: 200 ± 100 gf (1.96 ± 0.98N)

TRAVEL: 4 ± 0.3 mm

OPERATING TEMPERATURE: -20˚C to 70˚C

Materials

KNOB: POM

FRAME: SPCC

CONTACT: Silver clad

TERMINAL: Silver plated

SS-23D04-VG 2P3T NON-SHORTING

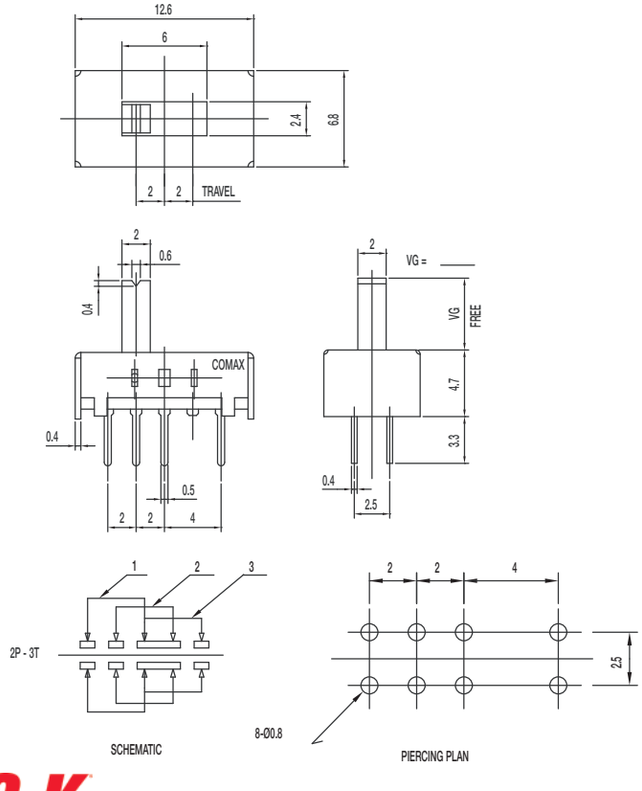

Specifications

CONTACT RATING: 0.3A @ 30 VDC

INITIAL CONTACT RESISTANCE: 30 m ohms max.

INSULATION RESISTANCE: 100 M ohms min.

DIELECTRIC STRENGTH: 500 V AC (50-60 Hz) between open terminals and between the frame and terminal.

OPERATING LIFE: 10,000 cycles with load

OPERATING FORCE: 150 ± 50 gf (1.47 ± 0.49N)
200 ± 100 gf (1.96 ± 0.98N)

TRAVEL: 2 ± 0.3 mm

OPERATING TEMPERATURE: -20˚C to 70˚C

Materials

KNOB: POM

FRAME: SPCC

CONTACT: Silver clad

TERMINAL: Silver plated

Dimensions are shown: mm
Specifications and dimensions subject to change

SS-23D07-G PA 2P3T NON-SHORTING

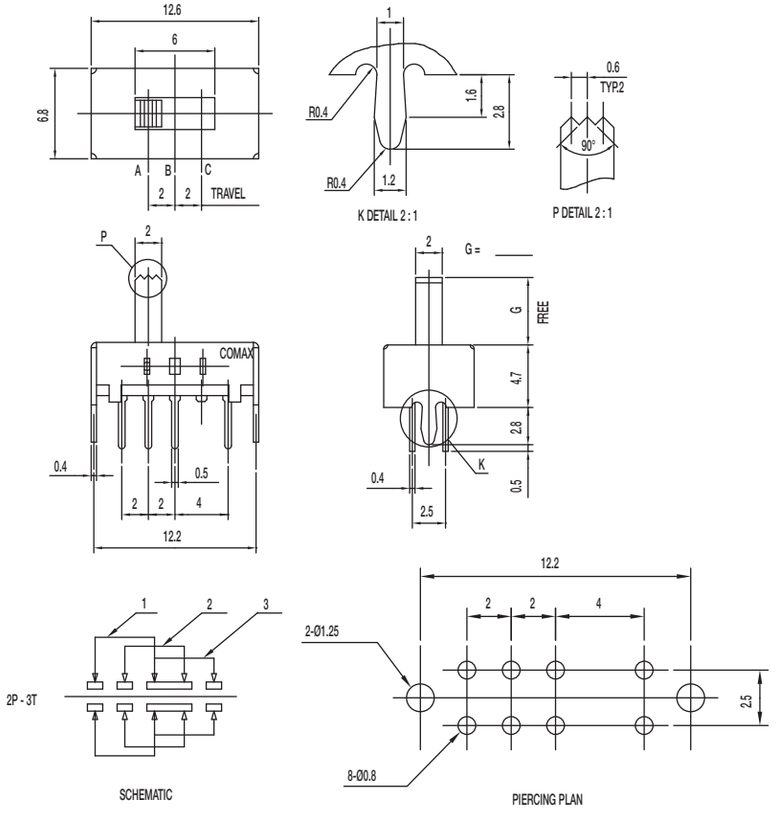

Specifications

CONTACT RATING: 0.3A @ 30 VDC

INITIAL CONTACT RESISTANCE: 30 m ohms max.

INSULATION RESISTANCE: 100 M ohms min.

DIELECTRIC STRENGTH: 500 V AC (50-60 Hz) between open terminals and between the frame and terminal.

OPERATING LIFE: 10,000 cycles with load

OPERATING FORCE: 250 ± 150 gf (2.45 ± 1.47N)
300 ± 150 gf (2.94 ± 1.47N)

TRAVEL: 2 ± 0.3 mm

OPERATING TEMPERATURE: -20˚C to 80˚C

Materials

KNOB: PA

FRAME: SPCC

CONTACT: Silver clad

TERMINAL: Silver plated

SS-23D08-G 2P3T

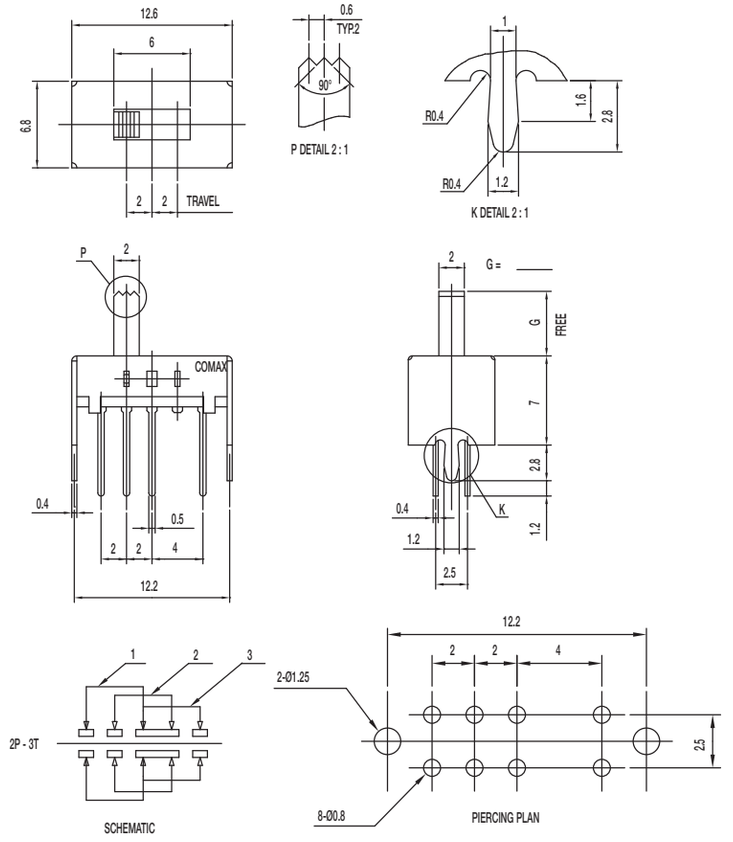

Specifications

CONTACT RATING: 0.3A @ 30 VDC

INITIAL CONTACT RESISTANCE: 30 m ohms max.

INSULATION RESISTANCE: 100 M ohms min.

DIELECTRIC STRENGTH: 500 V AC (50-60 Hz) between open terminals and between the frame and terminal.

OPERATING LIFE: 10,000 cycles with load

OPERATING FORCE: 150 ± 50 gf (1.47 ± 0.49N)
200 ± 100 gf (1.96 ± 0.98N)

TRAVEL: 2 ± 0.3 mm

OPERATING TEMPERATURE: -20˚C to 70˚C

Materials

KNOB: POM

FRAME: SPCC

CONTACT: Silver clad

TERMINAL: Silver plated

Dimensions are shown: mm
Specifications and dimensions subject to change

SS Series
Miniature Slide Switches

SS-24D02-VG 2P4T

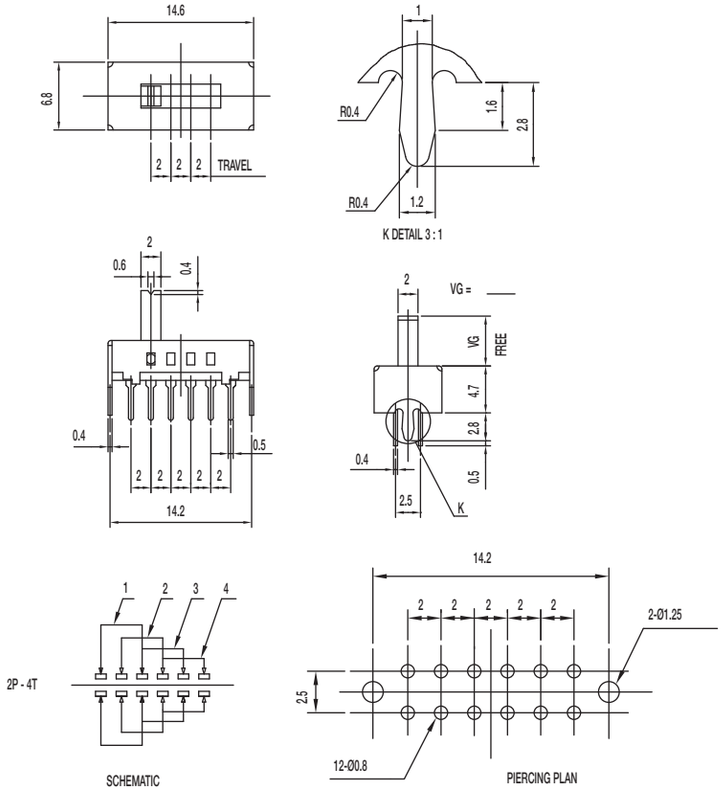

Specifications

CONTACT RATING: 0.3A @ 30 VDC

INITIAL CONTACT RESISTANCE: 30 m ohms max.

INSULATION RESISTANCE: 100 M ohms min.

DIELECTRIC STRENGTH: 500 V AC (50-60 Hz) between open terminals and between the frame and terminal.

OPERATING LIFE: 10,000 cycles with load

OPERATING FORCE: 250 ± 100 gf (2.45 ± 0.98N)

TRAVEL: 2 ± 0.3 mm

OPERATING TEMPERATURE: -20˚C to 70˚C

Materials

KNOB: POM

FRAME: SPCC

CONTACT: Silver clad

TERMINAL: Silver plated

SS-24D04-VG PA 2P4T

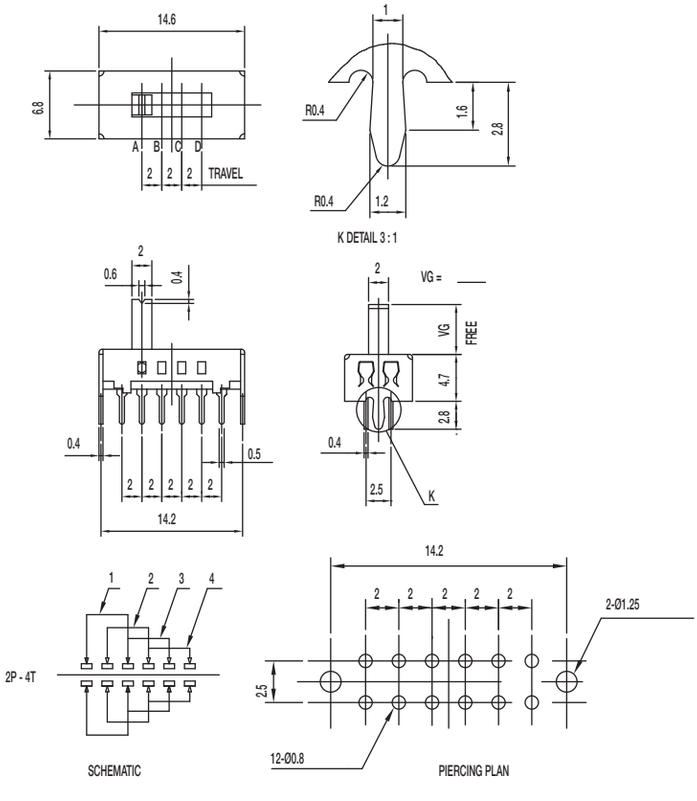

Specifications

CONTACT RATING: 0.3A @ 30 VDC

INITIAL CONTACT RESISTANCE: 30 m ohms max.

INSULATION RESISTANCE: 100 M ohms min.

DIELECTRIC STRENGTH: 500 V AC (50-60 Hz) between open terminals and between the frame and terminal.

OPERATING LIFE: 10,000 cycles with load

OPERATING FORCE: 250 ± 100 gf (2.45 ± 0.98N)

TRAVEL: 2 ± 0.3 mm

OPERATING TEMPERATURE: -20˚C to 70˚C

Materials

KNOB: PA

FRAME: SPCC

CONTACT: Silver clad

TERMINAL: Silver plated

SS-24D07-VG PA 2P4T

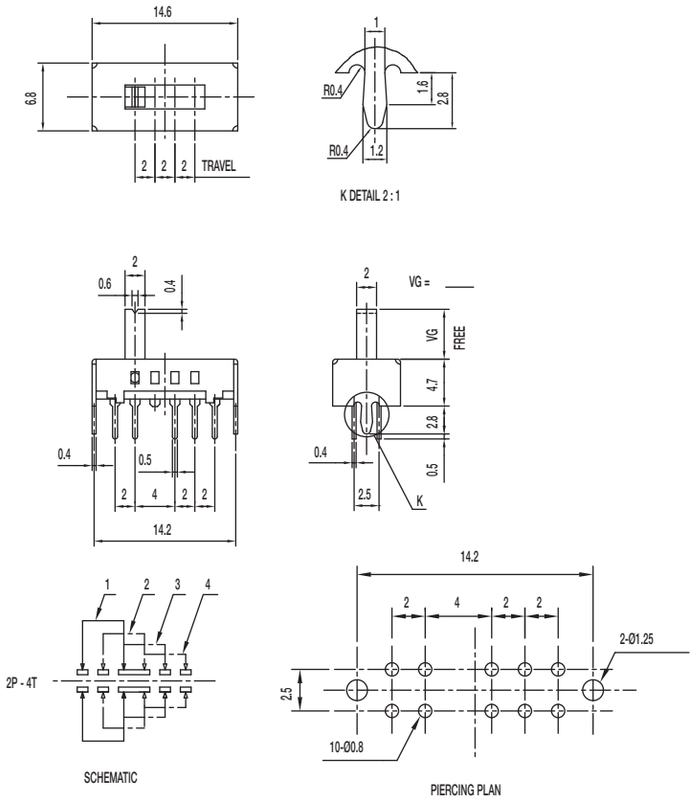

Specifications

CONTACT RATING: 0.3A @ 30 VDC

INITIAL CONTACT RESISTANCE: 30 m ohms max.

INSULATION RESISTANCE: 100 M ohms min.

DIELECTRIC STRENGTH: 500 V AC (50-60 Hz) between open terminals and between the frame and terminal.

OPERATING LIFE: 10,000 cycles with load

OPERATING FORCE: 250 ± 100 gf (2.45 ± 0.98N)

TRAVEL: 2 ± 0.3 mm

OPERATING TEMPERATURE: -20˚C to 70˚C

Materials

KNOB: PA

FRAME: SPCC

CONTACT: Silver clad

TERMINAL: Silver plated

SS-42D07-VG NS 4P2T NON-SHORTING

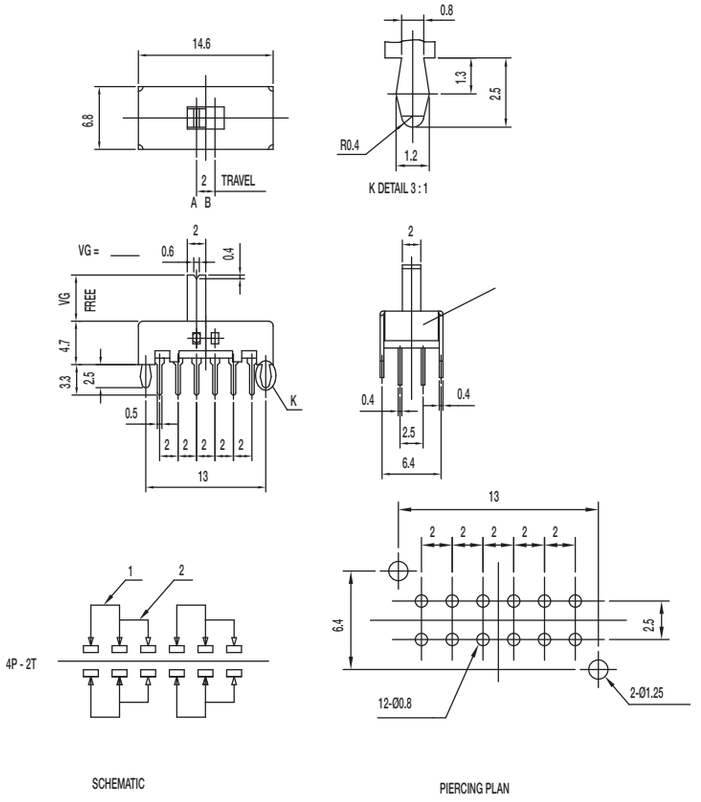

Specifications

CONTACT RATING: 0.3A @ 30 VDC

INITIAL CONTACT RESISTANCE: 30 m ohms max.

INSULATION RESISTANCE: 100 M ohms min.

DIELECTRIC STRENGTH: 500 V AC (50-60 Hz) between open terminals and between the frame and terminal.

OPERATING LIFE: 10,000 cycles with load

OPERATING FORCE: 250 ± 100 gf (2.45 ± 0.98N)

TRAVEL: 2 ± 0.3 mm

OPERATING TEMPERATURE: -20˚C to 70˚C

Materials

KNOB: POM

FRAME: SPCC

CONTACT: Silver clad

TERMINAL: Silver plated

SS Series
Miniature Slide Switches

SS-13E08-DG 1P3T

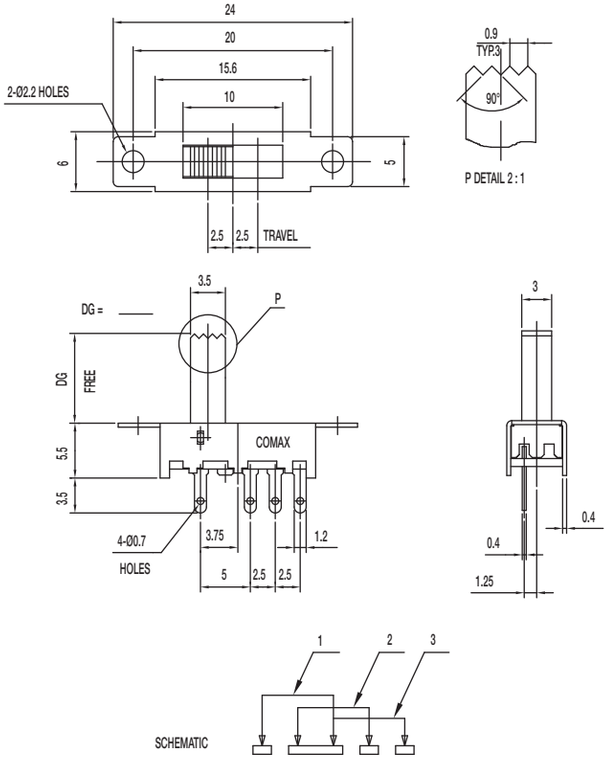

Specifications

CONTACT RATING: 0.3A @ 30 VDC

INITIAL CONTACT RESISTANCE: 30 m ohms max.

INSULATION RESISTANCE: 100 M ohms min.

DIELECTRIC STRENGTH: 500 V AC (50-60 Hz) between open terminals and between the frame and terminal.

OPERATING LIFE: 10,000 cycles with load

OPERATING FORCE: 200 ± 100 gf (1.96 ± 0.98N)
250 ± 100 gf (2.45 ± 0.98N)

TRAVEL: 2.5 ± 0.3 mm

OPERATING TEMPERATURE: -20˚C to 70˚C

Materials

KNOB: POM

FRAME: SPCC

CONTACT: Silver clad

TERMINAL: Silver plated

SS-13E29-TG 1P3T

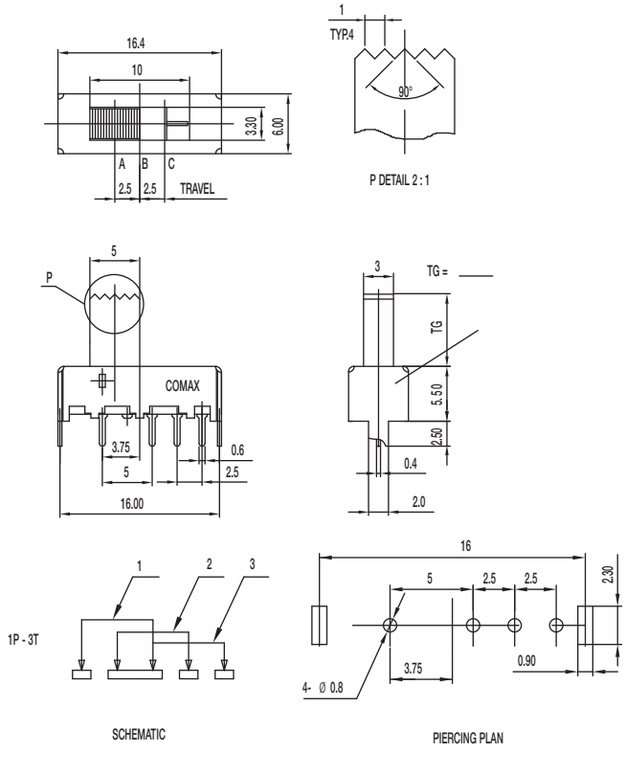

Specifications

CONTACT RATING: 0.3A @ 30 VDC

INITIAL CONTACT RESISTANCE: 30 m ohms max.

INSULATION RESISTANCE: 100 M ohms min.

DIELECTRIC STRENGTH: 500 V AC (50-60 Hz) between open terminals and between the frame and terminal.

OPERATING LIFE: 10,000 cycles with load

OPERATING FORCE: 200 ± 100 gf (1.96 ± 0.98N)
250 ± 100 gf (2.45 ± 0.98N)

TRAVEL: 2.5 ± 0.3 mm

OPERATING TEMPERATURE: -20˚C to 70˚C

Materials

KNOB: POM

FRAME: SPCC

CONTACT: Silver clad

TERMINAL: Silver plated

SS-22J08-G DPDT NON-SHORTING

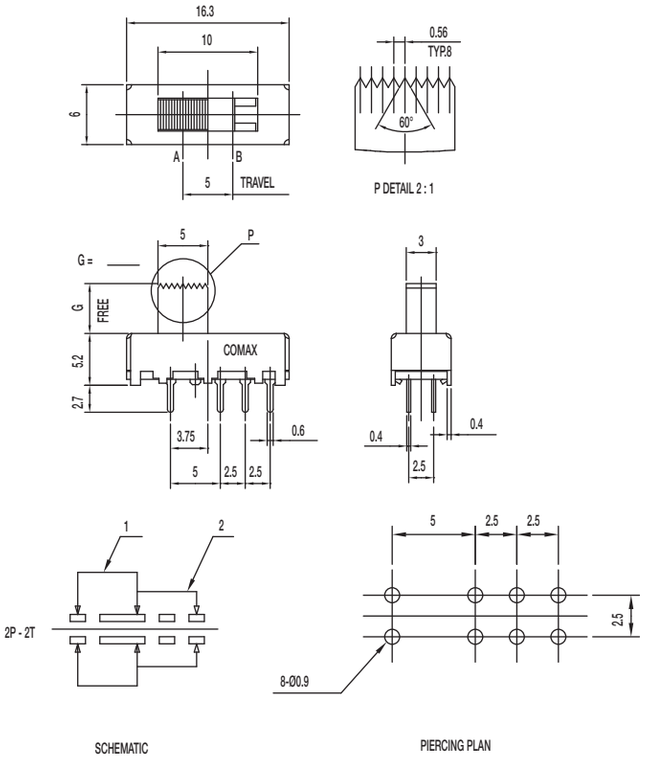

Specifications

CONTACT RATING: 0.3A @ 30 VDC

INITIAL CONTACT RESISTANCE: 30 m ohms max.

INSULATION RESISTANCE: 100 M ohms min.

DIELECTRIC STRENGTH: 500 V AC (50-60 Hz) between open terminals and between the frame and terminal.

OPERATING LIFE: 10,000 cycles with load

OPERATING FORCE: 200 ± 100 gf (1.96 ± 0.98N)

TRAVEL: 5 ± 0.3 mm

OPERATING TEMPERATURE: -20˚C to 70˚C

Materials

KNOB: POM

FRAME: SPCC

CONTACT: Silver clad

TERMINAL: Silver plated

SS-23E05-G 4 2P3T

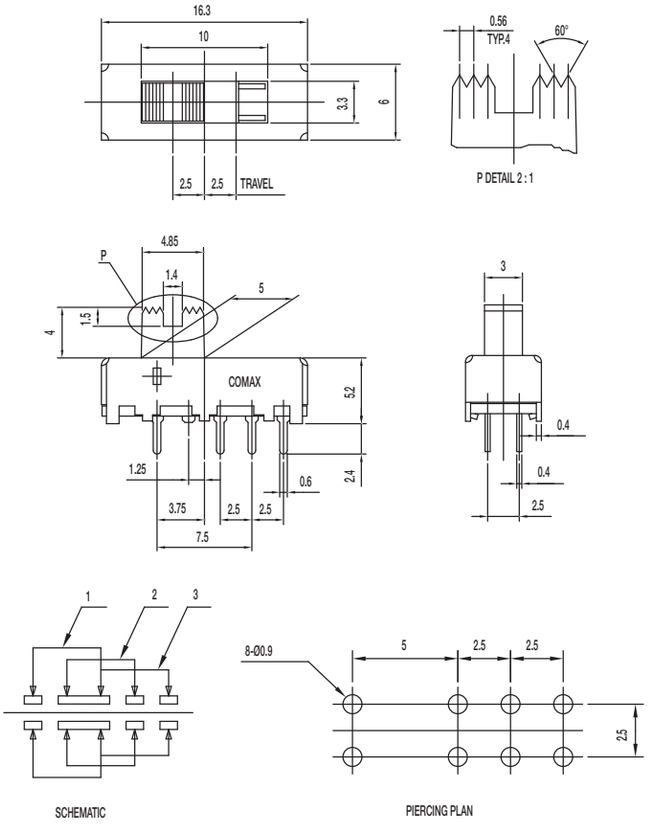

Specifications

CONTACT RATING: 0.3A @ 30 VDC

INITIAL CONTACT RESISTANCE: 30 m ohms max.

INSULATION RESISTANCE: 100 M ohms min.

DIELECTRIC STRENGTH: 500 V AC (50-60 Hz) between open terminals and between the frame and terminal.

OPERATING LIFE: 10,000 cycles with load

OPERATING FORCE: 200 ± 100 gf (1.96 ± 0.98N)
300 ± 100 gf (2.94 ± 0.98N)

TRAVEL: 2.5 ± 0.3 mm

OPERATING TEMPERATURE: -20˚C to 70˚C

Materials

KNOB: POM

FRAME: SPCC

CONTACT: Silver clad

TERMINAL: Silver plated

SS Series
Miniature Slide Switches

SS-23E06-G 2P3T

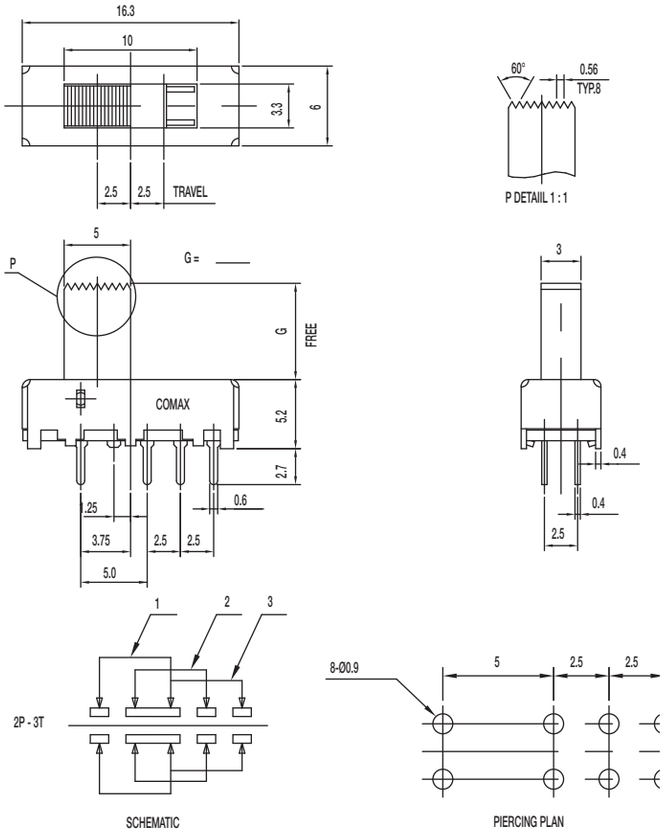

Specifications

CONTACT RATING: 0.3A @ 30 VDC

INITIAL CONTACT RESISTANCE: 30 m ohms max.

INSULATION RESISTANCE: 100 M ohms min.

DIELECTRIC STRENGTH: 500 V AC (50-60 Hz) between open terminals and between the frame and terminal.

OPERATING LIFE: 10,000 cycles with load

OPERATING FORCE: 200 ± 100 gf (1.96 ± 0.98N)
250 ± 100 gf (2.45 ± 0.98N)

TRAVEL: 2.5 ± 0.3 mm

OPERATING TEMPERATURE: -20˚C to 70˚C

Materials

KNOB: POM

FRAME: SPCC

CONTACT: Silver clad

TERMINAL: Silver plated

SS-23E08-TG 2P3T

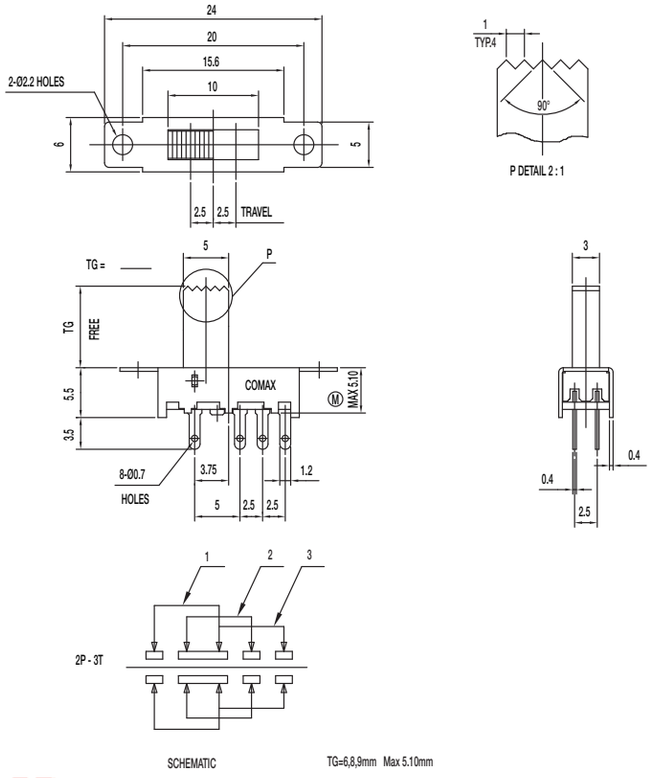

Specifications

CONTACT RATING: 0.3A @ 30 VDC

INITIAL CONTACT RESISTANCE: 30 m ohms max.

INSULATION RESISTANCE: 100 M ohms min.

DIELECTRIC STRENGTH: 500 V AC (50-60 Hz) between open terminals and between the frame and terminal.

OPERATING LIFE: 10,000 cycles with load

OPERATING FORCE: 200 ± 100 gf (1.96 ± 0.98N)
250 ± 100 gf (2.45 ± 0.98N)

TRAVEL: 2.5 ± 0.3 mm

OPERATING TEMPERATURE: -20˚C to 80˚C

Materials

KNOB: POM

FRAME: SPCC

CONTACT: Silver clad

TERMINAL: Silver plated

SS-23E10-G 2P3T

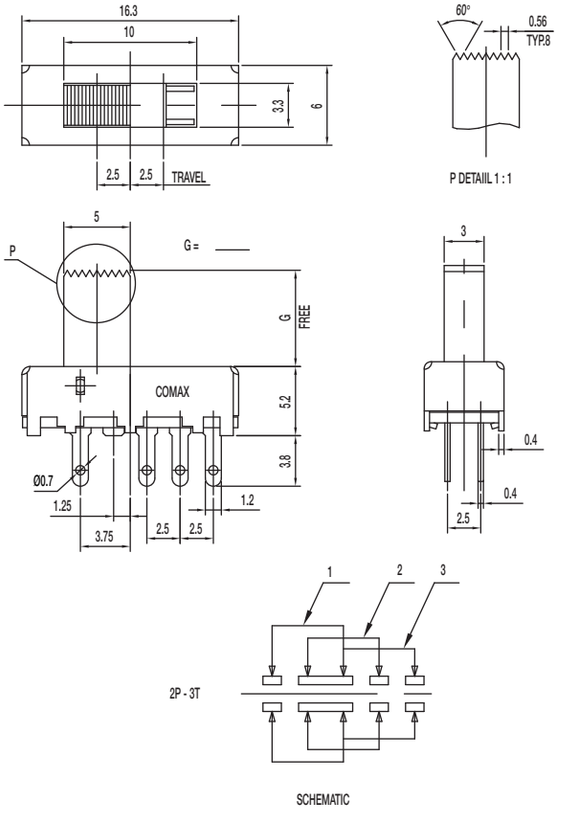

Specifications

CONTACT RATING: 0.3A @ 30 VDC

INITIAL CONTACT RESISTANCE: 30 m ohms max.

INSULATION RESISTANCE: 100 M ohms min.

DIELECTRIC STRENGTH: 500 V AC (50-60 Hz) between open terminals and between the frame and terminal.

OPERATING LIFE: 10,000 cycles with load

OPERATING FORCE: 200 ± 100 gf (1.96 ± 0.98N)
250 ± 100 gf (2.45 ± 0.98N)

TRAVEL: 2.5 ± 0.3 mm

OPERATING TEMPERATURE: -20˚C to 70˚C

Materials

KNOB: POM

FRAME: SPCC

CONTACT: Silver clad

TERMINAL: Silver plated

SS-23E11-G 2P3T

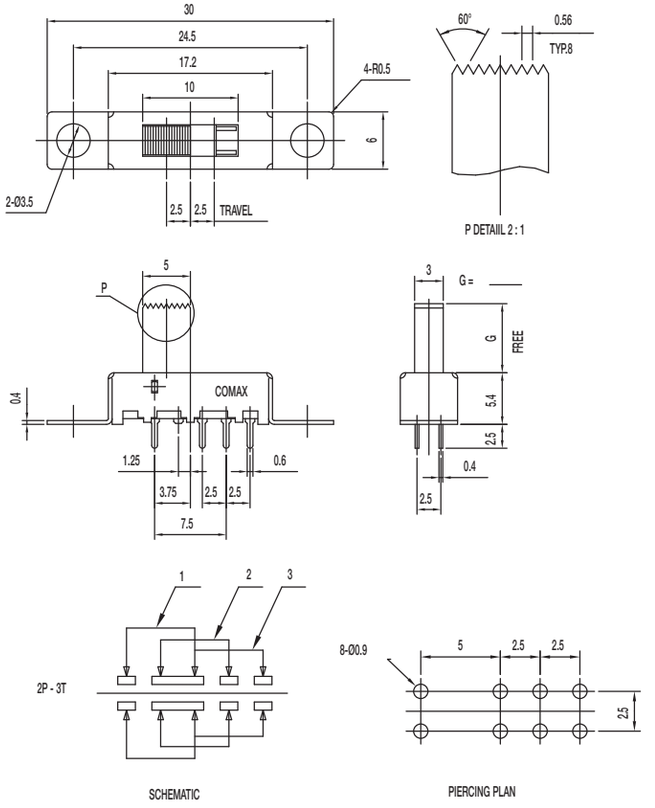

Specifications

CONTACT RATING: 0.3A @ 30 VDC

INITIAL CONTACT RESISTANCE: 30 m ohms max.

INSULATION RESISTANCE: 100 M ohms min.

DIELECTRIC STRENGTH: 500 V AC (50-60 Hz) between open terminals and between the frame and terminal.

OPERATING LIFE: 10,000 cycles with load

OPERATING FORCE: 200 ± 100 gf (1.96 ± 0.98N)
250 ± 100 gf (2.45 ± 0.98N)

TRAVEL: 2.5 ± 0.3 mm

OPERATING TEMPERATURE: -20˚C to 70˚C

Materials

KNOB: POM

FRAME: SPCC

CONTACT: Silver clad

TERMINAL: Silver plated

SS Series
Miniature Slide Switches

SS-23E12-TG 2P3T

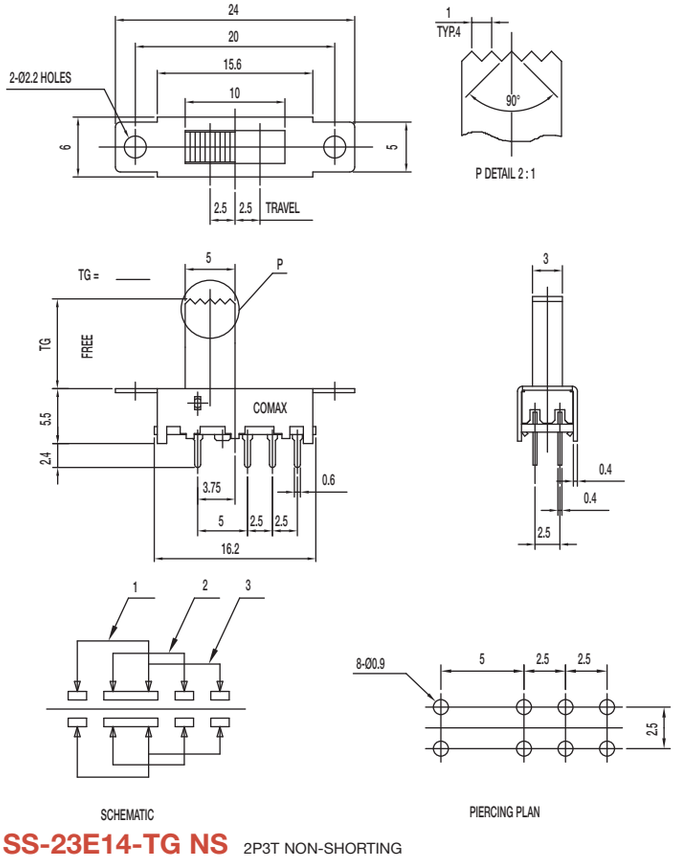

Specifications

CONTACT RATING: 0.3A @ 30 VDC

INITIAL CONTACT RESISTANCE: 30 m ohms max.

INSULATION RESISTANCE: 100 M ohms min.

DIELECTRIC STRENGTH: 500 V AC (50-60 Hz) between open terminals and between the frame and terminal.

OPERATING LIFE: 10,000 cycles with load

OPERATING FORCE: 200 ± 100 gf (1.96 ± 0.98N)
250 ± 100 gf (2.45 ± 0.98N)

TRAVEL: 2.5 ± 0.3 mm

OPERATING TEMPERATURE: -20˚C to 70˚C

Materials

KNOB: POM

FRAME: SPCC

CONTACT: Silver clad

TERMINAL: Silver plated

SS-23E14-TG NS 2P3T NON-SHORTING

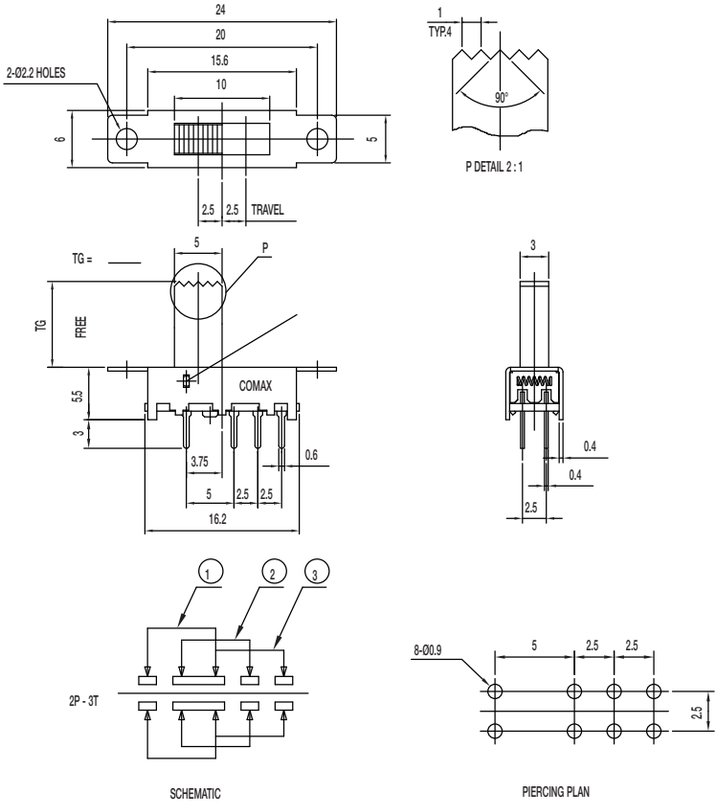

Specifications

CONTACT RATING: 0.3A @ 30 VDC

INITIAL CONTACT RESISTANCE: 30 m ohms max.

INSULATION RESISTANCE: 100 M ohms min.

DIELECTRIC STRENGTH: 500 V AC (50-60 Hz) between open terminals and between the frame and terminal.

OPERATING LIFE: 10,000 cycles with load

OPERATING FORCE: 200 ± 100 gf (1.96 ± 0.98N)
250 ± 100 gf (2.45 ± 0.98N)

TRAVEL: 2.5 ± 0.3 mm

OPERATING TEMPERATURE: -20˚C to 70˚C

Materials

KNOB: POM

FRAME: SPCC

CONTACT: Silver clad

TERMINAL: Silver plated

Dimensions are shown: mm
Specifications and dimensions subject to change

SS-24E06-TG 2P4T SHORTING

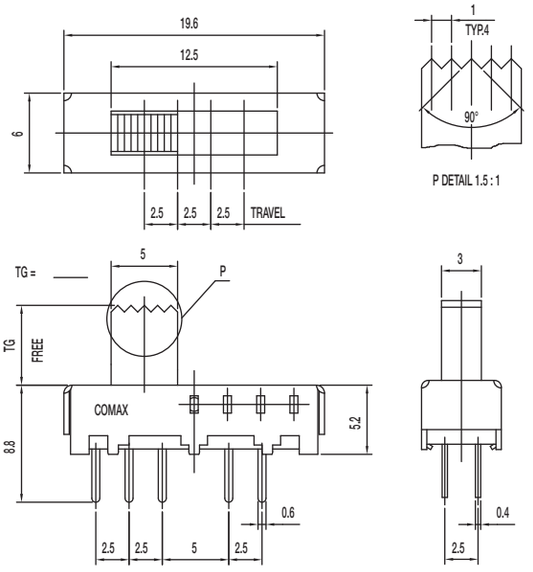

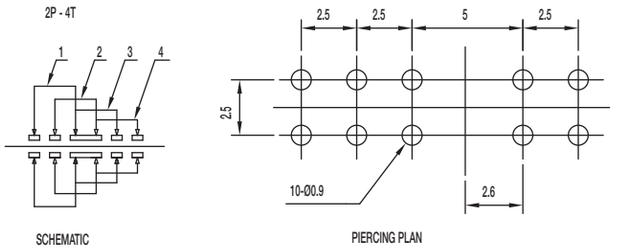

Specifications

CONTACT RATING: 0.3A @ 30 VDC
INITIAL CONTACT RESISTANCE: 30 m ohms max.
INSULATION RESISTANCE: 100 M ohms min.
DIELECTRIC STRENGTH: 500 V AC (50-60 Hz) between open terminals and between the frame and terminal.
OPERATING LIFE: 10,000 cycles with load
OPERATING FORCE: 250 ± 100 gf (2.45 ± 0.98N)
TRAVEL: 2.5 ± 0.3 mm
OPERATING TEMPERATURE: -20˚C to 70˚C

Materials

KNOB: POM
FRAME: SPCC
CONTACT: Silver clad
TERMINAL: Silver plated

SS-24E08-CG 2P4T

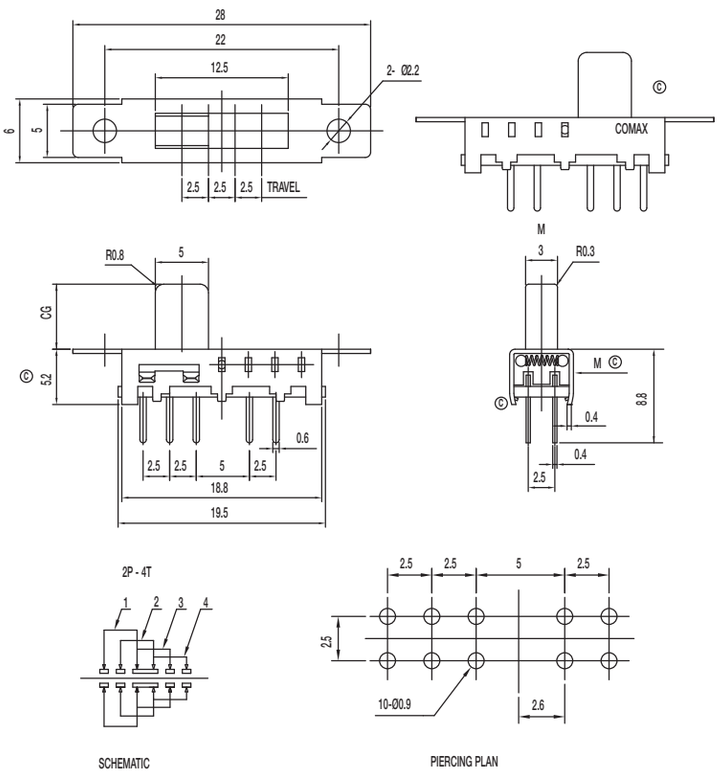

Specifications

CONTACT RATING: 0.3A @ 30 VDC
INITIAL CONTACT RESISTANCE: 30 m ohms max.
INSULATION RESISTANCE: 100 M ohms min.
DIELECTRIC STRENGTH: 500 V AC (50-60 Hz) between open terminals and between the frame and terminal.
OPERATING LIFE: 10,000 cycles with load
OPERATING FORCE: 250 ± 100 gf (2.45 ± 0.98N)
TRAVEL: 2.5 ± 0.3 mm
OPERATING TEMPERATURE: -20˚C to 70˚C

Materials

KNOB: POM
FRAME: SPCC
CONTACT: Silver clad
TERMINAL: Silver plated

SS Series
Miniature Slide Switches

SS-24E09-TG 2P4T

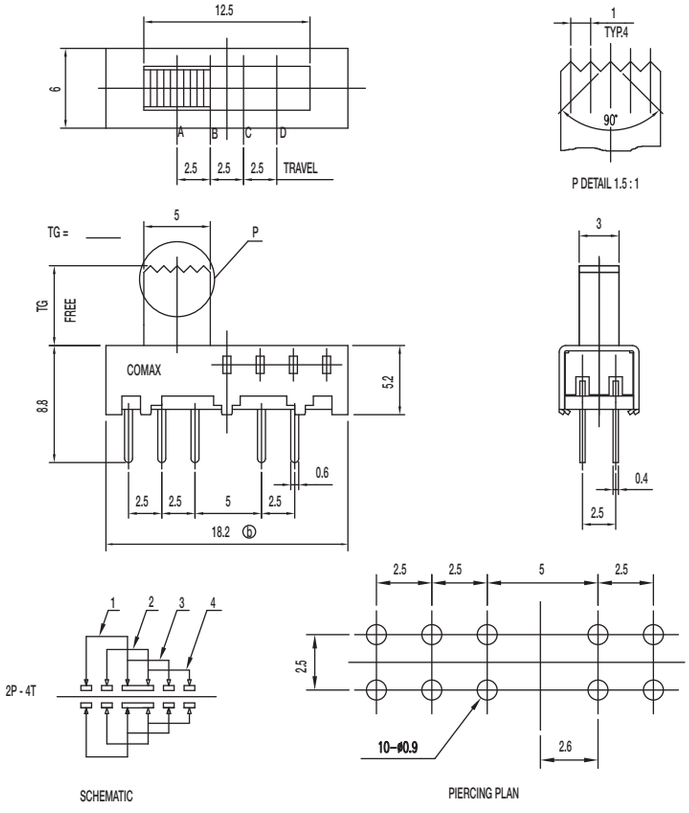

Specifications

CONTACT RATING: 0.3A @ 30 VDC

INITIAL CONTACT RESISTANCE: 30 m ohms max.

INSULATION RESISTANCE: 100 M ohms min.

DIELECTRIC STRENGTH: 500 V AC (50-60 Hz) between open terminals and between the frame and terminal.

OPERATING LIFE: 10,000 cycles with load

OPERATING FORCE: 250 ± 100 gf (2.45 ± 0.98N)

TRAVEL: 2.5 ± 0.3 mm

OPERATING TEMPERATURE: -20˚C to 70˚C

Materials

KNOB: POM

FRAME: SPCC

CONTACT: Silver clad

TERMINAL: Silver plated

SS-24E10-TG 2P4T

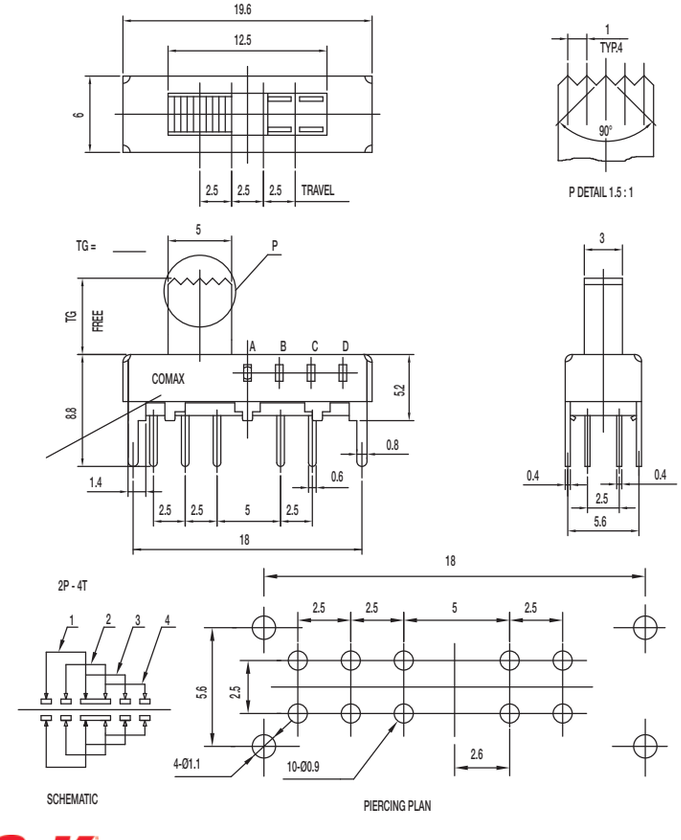

Specifications

CONTACT RATING: 0.3A @ 30 VDC

INITIAL CONTACT RESISTANCE: 30 m ohms max.

INSULATION RESISTANCE: 100 M ohms min.

DIELECTRIC STRENGTH: 500 V AC (50-60 Hz) between open terminals and between the frame and terminal.

OPERATING LIFE: 10,000 cycles with load

OPERATING FORCE: 250 ± 100 gf (2.45 ± 0.98N)

TRAVEL: 2.5 ± 0.3 mm

OPERATING TEMPERATURE: -20˚C to 70˚C

Materials

KNOB: POM

FRAME: SPCC

CONTACT: Silver clad

TERMINAL: Silver plated

SS-24E18-CG 2P4T

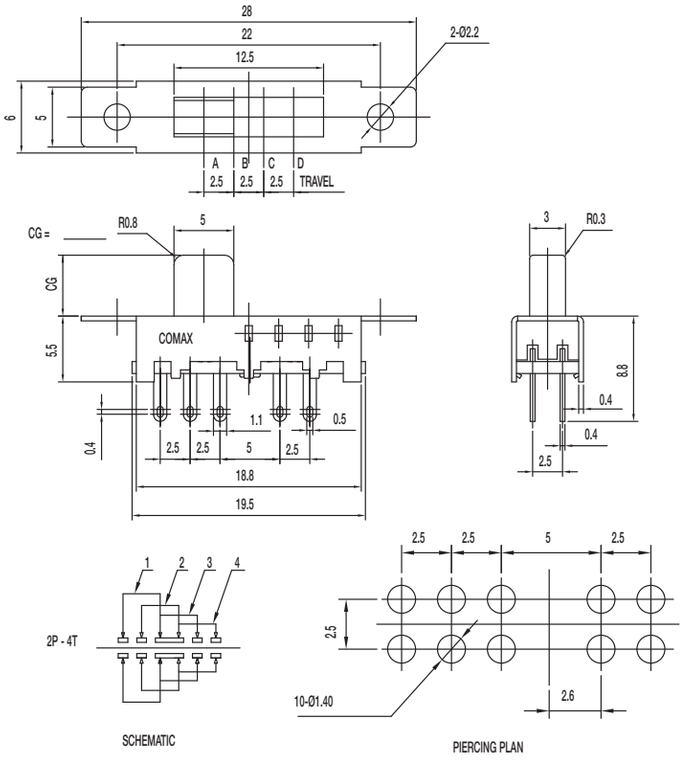

Specifications

CONTACT RATING: 0.3A @ 30 VDC

INITIAL CONTACT RESISTANCE: 30 m ohms max.

INSULATION RESISTANCE: 100 M ohms min.

DIELECTRIC STRENGTH: 500 V AC (50-60 Hz) between open terminals and between the frame and terminal.

OPERATING LIFE: 10,000 cycles with load

OPERATING FORCE: 250 ± 100 gf (2.45 ± 0.98N)

TRAVEL: 2.5 ± 0.3 mm

OPERATING TEMPERATURE: -20˚C to 70˚C

Materials

KNOB: POM

FRAME: SPCC

CONTACT: Silver clad

TERMINAL: Silver plated

SS-24E19-TG 2P4T

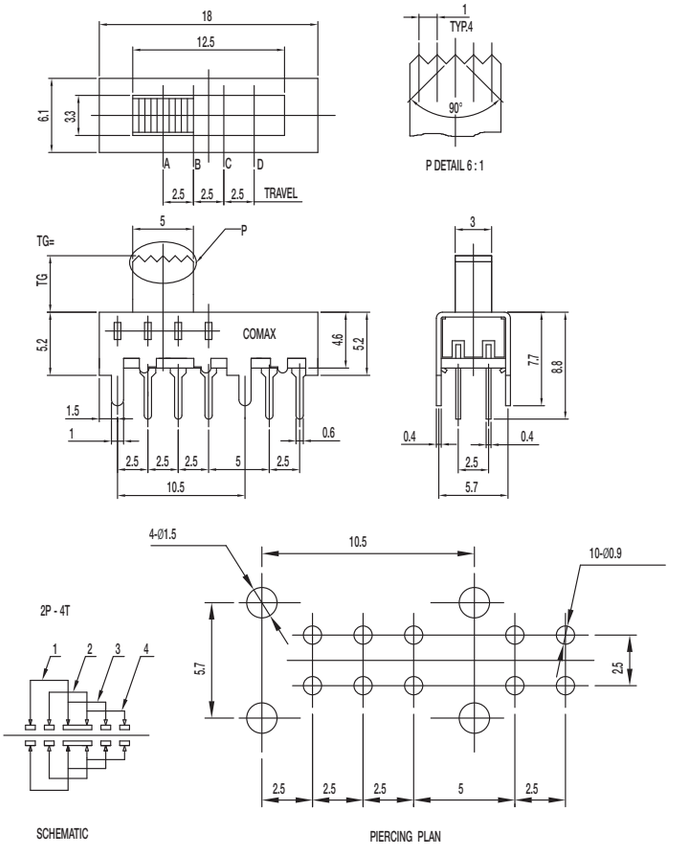

Specifications

CONTACT RATING: 0.3A @ 30 VDC

INITIAL CONTACT RESISTANCE: 30 m ohms max.

INSULATION RESISTANCE: 100 M ohms min.

DIELECTRIC STRENGTH: 500 V AC (50-60 Hz) between open terminals and between the frame and terminal.

OPERATING LIFE: 10,000 cycles with load

OPERATING FORCE: 250 ± 100 gf (2.45 ± 0.98N)

TRAVEL: 2.5 ± 0.3 mm

OPERATING TEMPERATURE: -10˚C to 60˚C

Materials

KNOB: POM

FRAME: SPCC

CONTACT: Silver clad

TERMINAL: Silver plated

SS Series
Miniature Slide Switches

SS-22H18-G DPDT NON-SHORTING

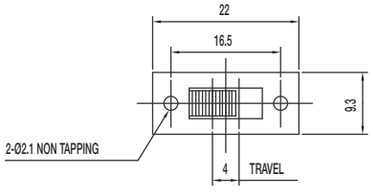

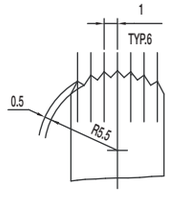

P DETAIL 2 : 1

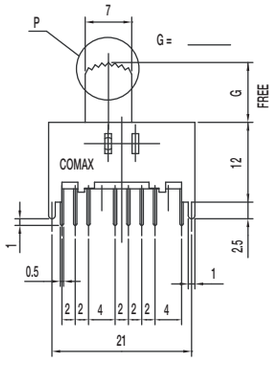

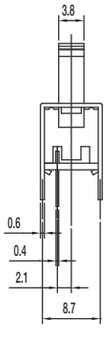

2P - 2T

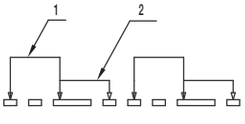

SCHEMATIC

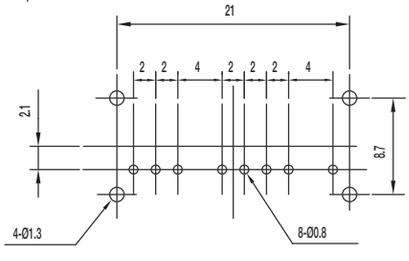

PIERCING PLAN

Specifications

CONTACT RATING: 0.3A @ 30 VDC

INITIAL CONTACT RESISTANCE: 30 m ohms max.

INSULATION RESISTANCE: 100 M ohms min.

DIELECTRIC STRENGTH: 500 V AC (50-60 Hz) between open terminals and between the frame and terminal.

OPERATING LIFE: 10,000 cycles with load

OPERATING FORCE: 200 ± 100 gf (1.96 ± 0.98N)

TRAVEL: 4 ± 0.3 mm

OPERATING TEMPERATURE: -10˚C to 60˚C

Materials

KNOB: POM

FRAME: SPCC

CONTACT: Silver clad

TERMINAL: Silver plated

SS-23D10-G 2P3T

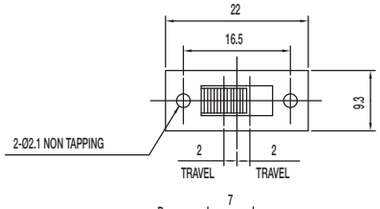

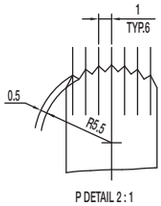

P DETAIL 2 : 1

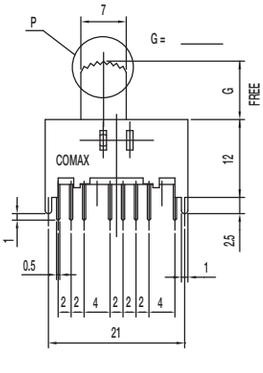

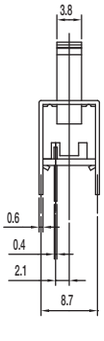

2P - 3T

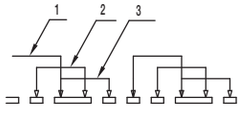

SCHEMATIC

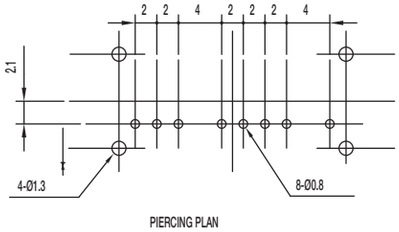

PIERCING PLAN

Specifications

CONTACT RATING: 0.3A @ 30 VDC

INITIAL CONTACT RESISTANCE: 30 m ohms max.

INSULATION RESISTANCE: 100 M ohms min.

DIELECTRIC STRENGTH: 500 V AC (50-60 Hz) between open terminals and between the frame and terminal.

OPERATING LIFE: 10,000 cycles with load

OPERATING FORCE: 200 ± 100 gf (1.96 ± 0.98N)
300 ± 150 gf (2.94 ± 1.47N)

TRAVEL: 2 ± 0.3 mm

OPERATING TEMPERATURE: -20˚C to 70˚C

Materials

KNOB: POM

FRAME: SPCC

CONTACT: Silver clad

TERMINAL: Silver plated

SS-24D01-M 2P4T

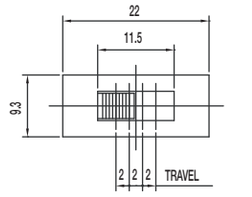

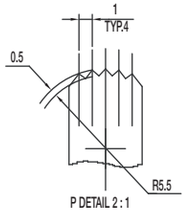

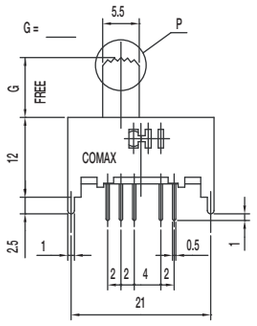

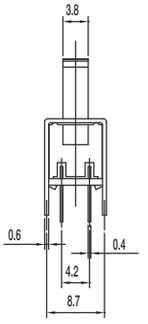

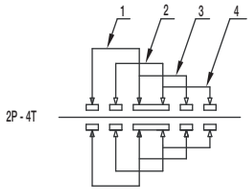

SCHEMATIC

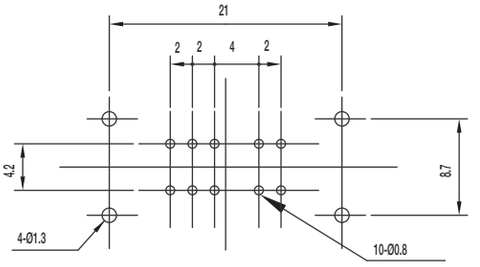

PIERCING PLAN

Specifications

CONTACT RATING: 0.3A @ 30 VDC
INITIAL CONTACT RESISTANCE: 30 m ohms max.
INSULATION RESISTANCE: 100 M ohms min.
DIELECTRIC STRENGTH: 500 V AC (50-60 Hz) between open terminals and between the frame and terminal.
OPERATING LIFE: 10,000 cycles with load
OPERATING FORCE: 200 ± 100 gf (1.96 ± 0.98N)
300 ± 100 gf (2.94 ± 0.98N); 450 ± 150 gf (4.41 ± 1.47N)
TRAVEL: 2 ± 0.3 mm
OPERATING TEMPERATURE: -20˚C to 70˚C

Materials

KNOB: POM
FRAME: SPCC
CONTACT: Silver clad
TERMINAL: Silver plated

SS-42D11-G 4P2T SHORTING

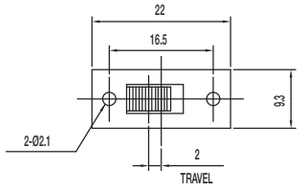

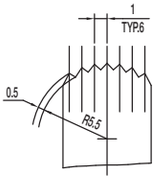

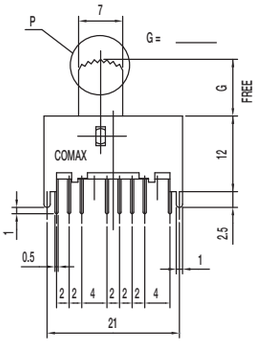

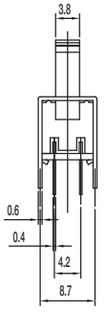

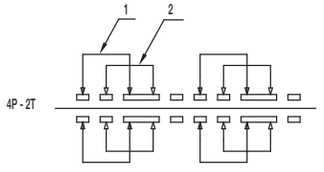

SCHEMATIC

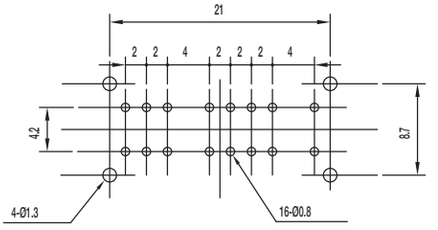

PIERCING PLAN

Specifications

CONTACT RATING: 0.3A @ 30 VDC
INITIAL CONTACT RESISTANCE: 30 m ohms max.
INSULATION RESISTANCE: 100 M ohms min.
DIELECTRIC STRENGTH: 500 V AC (50-60 Hz) between open terminals and between the frame and terminal.
OPERATING LIFE: 10,000 cycles with load
OPERATING FORCE: 200 ± 100 gf (1.96 ± 0.98N)
TRAVEL: 2 ± 0.3 mm
OPERATING TEMPERATURE: -20˚C to 70˚C

Materials

KNOB: POM
FRAME: SPCC
CONTACT: Silver clad
TERMINAL: Silver plated

Dimensions are shown: mm
Specifications and dimensions subject to change

SS Series
Miniature Slide Switches

SS-42H06-G 4P2T NON-SHORTING

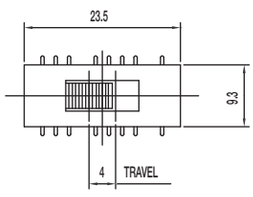

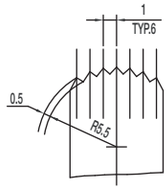

P DETAIL 2 : 1

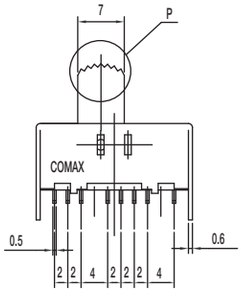

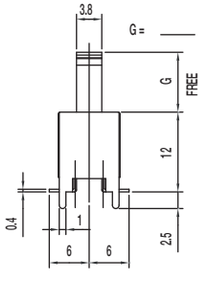

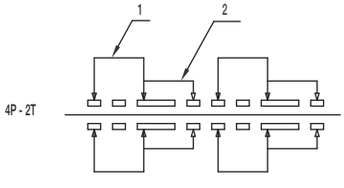

SCHEMATIC

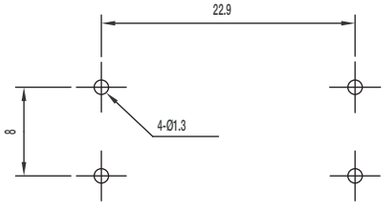

PIERCING PLAN

Specifications

CONTACT RATING: 0.3A @ 30 VDC
INITIAL CONTACT RESISTANCE: 30 m ohms max.
INSULATION RESISTANCE: 100 M ohms min.
DIELECTRIC STRENGTH: 500 V AC (50-60 Hz) between open terminals and between the frame and terminal.
OPERATING LIFE: 10,000 cycles with load
OPERATING FORCE: 200 ± 100 gf (1.96 ± 0.98N)
TRAVEL: 4 ± 0.3 mm
OPERATING TEMPERATURE: -20˚C to 70˚C

Materials

KNOB: POM
FRAME: SPCC
CONTACT: Silver clad
TERMINAL: Silver plated

SS-43D01-G 4P3T

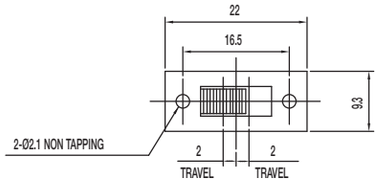

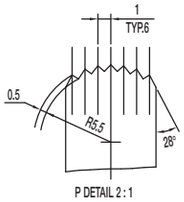

P DETAIL 2 : 1

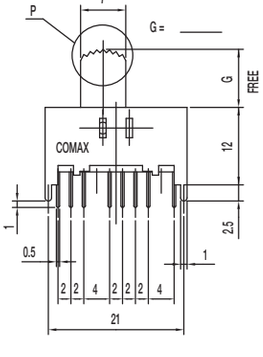

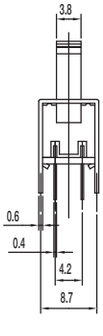

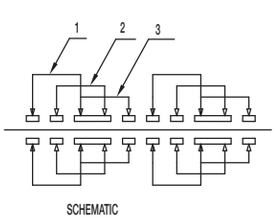

SCHEMATIC

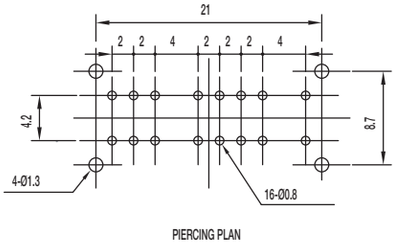

PIERCING PLAN

Specifications

CONTACT RATING: 0.3A @ 30 VDC
INITIAL CONTACT RESISTANCE: 30 m ohms max.
INSULATION RESISTANCE: 100 M ohms min.
DIELECTRIC STRENGTH: 500 V AC (50-60 Hz) between open terminals and between the frame and terminal.
OPERATING LIFE: 10,000 cycles with load
OPERATING FORCE: 200 ± 100 gf (1.96 ± 0.98N)
300 ± 150 gf (2.94 ± 1.47N)
TRAVEL: 2 ± 0.3 mm
OPERATING TEMPERATURE: -20˚C to 70˚C

Materials

KNOB: POM
FRAME: SPCC
CONTACT: Silver clad
TERMINAL: Silver plated

Dimensions are shown: mm
Specifications and dimensions subject to change

SS-43D02-G 4P3T

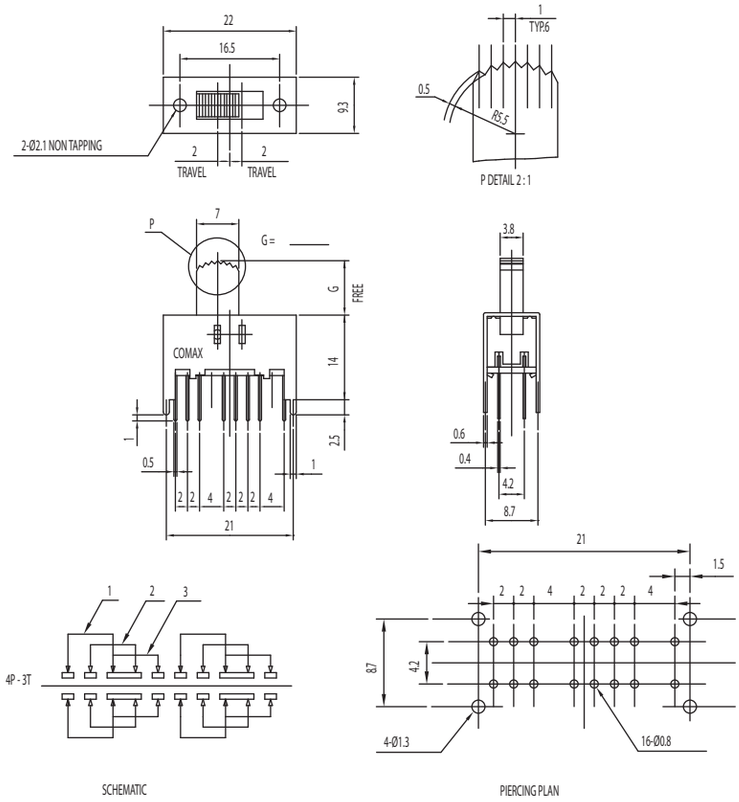

Specifications

CONTACT RATING: 0.3A @ 30 VDC
INITIAL CONTACT RESISTANCE: 30 m ohms max.
INSULATION RESISTANCE: 100 M ohms min.
DIELECTRIC STRENGTH: 500 V AC (50-60 Hz) between open terminals and between the frame and terminal.
OPERATING LIFE: 10,000 cycles with load
OPERATING FORCE: 200 ± 100 gf (1.96 ± 0.98N)
300 ± 150 gf (2.94 ± 1.47N)
TRAVEL: 2 ± 0.3 mm
OPERATING TEMPERATURE: -20˚C to 70˚C

Materials

KNOB: POM
FRAME: SPCC
CONTACT: Silver clad
TERMINAL: Silver plated

SS-43D03-G 4P3T

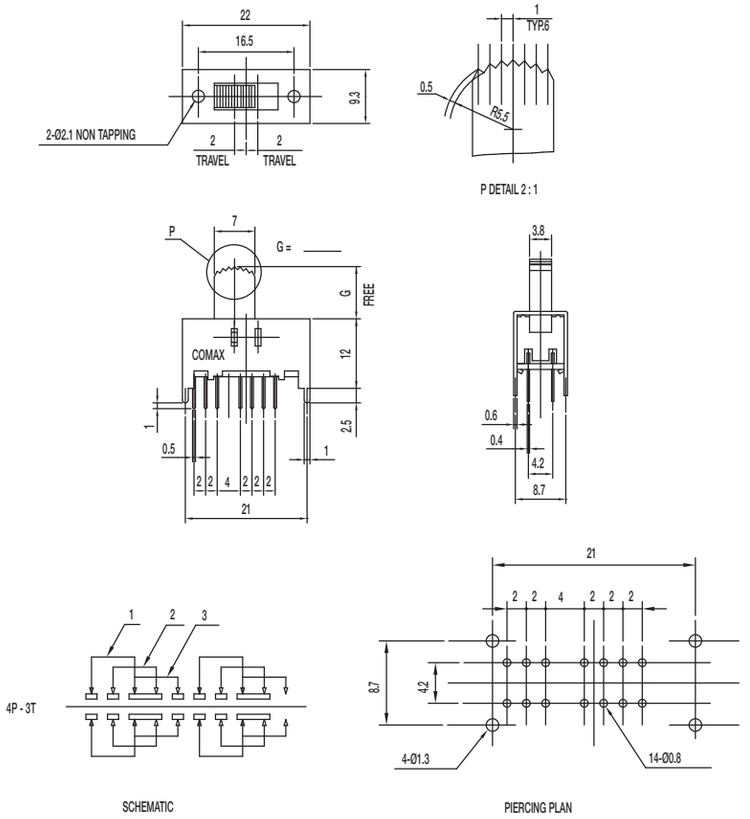

Specifications

CONTACT RATING: 0.3A @ 30 VDC
INITIAL CONTACT RESISTANCE: 30 m ohms max.
INSULATION RESISTANCE: 100 M ohms min.
DIELECTRIC STRENGTH: 500 V AC (50-60 Hz) between open terminals and between the frame and terminal.
OPERATING LIFE: 10,000 cycles with load
OPERATING FORCE: 200 ± 100 gf (1.96 ± 0.98N)
300 ± 150 gf (2.94 ± 1.47N)
TRAVEL: 2 ± 0.3 mm
OPERATING TEMPERATURE: -20˚C to 70˚C

Materials

KNOB: POM
FRAME: SPCC
CONTACT: Silver clad
TERMINAL: Silver plated

SS Series
Miniature Slide Switches

SS-43D06-G 4P3T

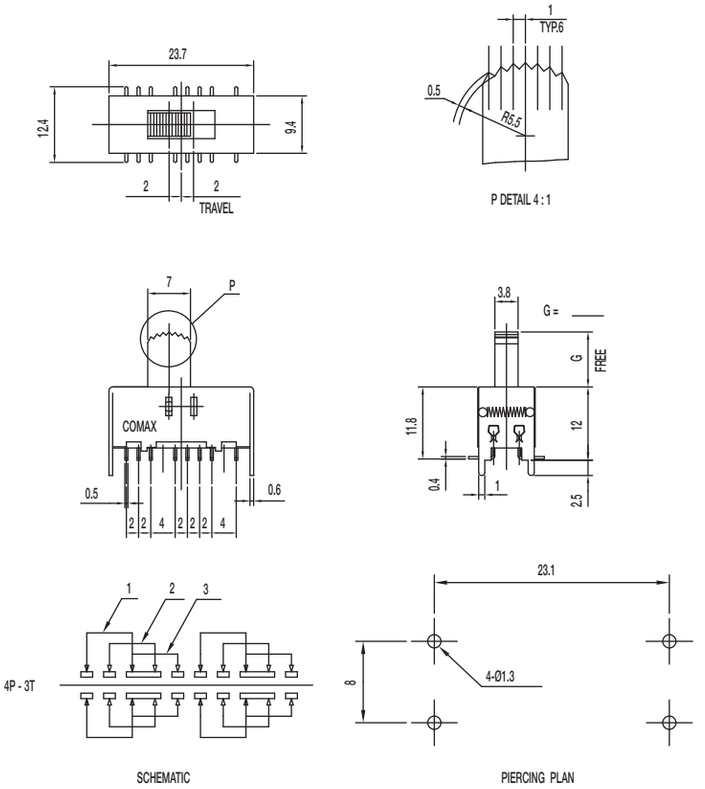

Specifications

CONTACT RATING: 0.3A @ 30 VDC

INITIAL CONTACT RESISTANCE: 30 m ohms max.

INSULATION RESISTANCE: 100 M ohms min.

DIELECTRIC STRENGTH: 500 V AC (50-60 Hz) between open terminals and between the frame and terminal.

OPERATING LIFE: 10,000 cycles with load

OPERATING FORCE: 200 ± 100 gf (1.96 ± 0.98N)
350 ± 150 gf (3.43 ± 1.47N)

TRAVEL: 2 ± 0.3 mm

OPERATING TEMPERATURE: -20˚C to 70˚C

Materials

KNOB: POM

FRAME: SPCC

CONTACT: Silver clad

TERMINAL: Silver plated

SS-14D0839-VG 5 PA 1P4T

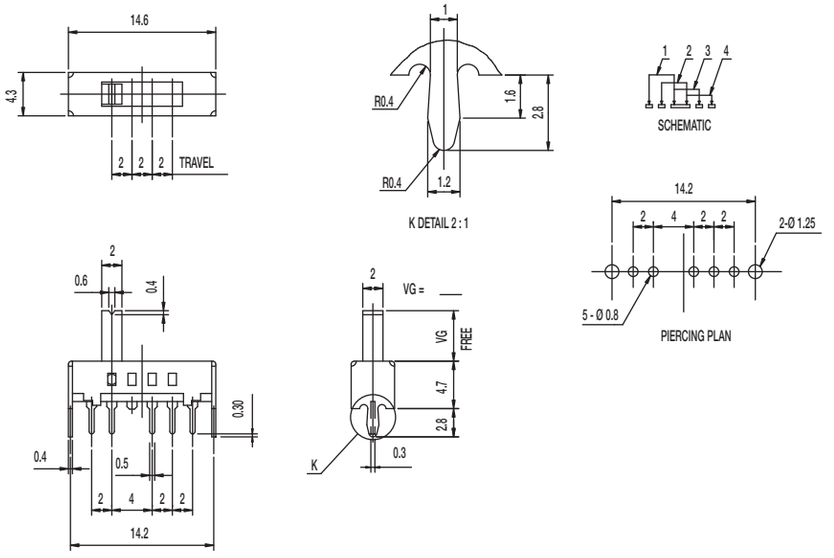

Specifications

CONTACT RATING: 0.3A @ 30 VDC

INITIAL CONTACT RESISTANCE: 30 m ohms max.

INSULATION RESISTANCE: 100 M ohms min.

DIELECTRIC STRENGTH: 500 V AC (50-60 Hz) between open terminals and between the frame and terminal.

OPERATING LIFE: 10,000 cycles without load; 5,000 cycles with load

OPERATING FORCE: 250 ± 100 gf (2.45 ± 0.98N)

TRAVEL: 2 ± 0.3 mm

OPERATING TEMPERATURE: -20˚C to 70˚C

Materials

KNOB: PA

FRAME: SPCC

CONTACT: Silver clad

TERMINAL: Silver plated

Snap-acting
Product Selection Guide

Snap-acting							
Series	**TF**	**TFS**	**TF2**	**TM**	**LC**	**LCA**	**LCS**
Switch Type	Miniature	Sealed Miniature	Sealed Miniature	Miniature	Subminiature Precision	Subminiature	Sealed Subminiature
Poles/Throws	SPST, SPDT	SPDT	SPDT	SPST, SPDT	SPST, SPDT	SPDT	SPST
Maximum Current	21 Amps	10 Amps	10 Amps	15 Amps	10.1 Amps	10 Amps	6 Amps
Terminations							
Solder	•		•	•	•	•	•
Turret							
Quick Connect	•	•	•	•	•	•	•
Screw			•	•			
Wire Leads		•			•		•
PC					•	•	•
Formed PC					•	•	
Extended Operations	•	•		•	•	•	
Sealed		•					•
Page No.	J–6	J-12 / J-16	J-20	J-26	J–32	J–36	J–40

Snap-acting								
Series	**MM**	**ZM**	**ZMA**	**ZMB**	**ZMS**	**ZMSM**	**MDS**	**HB**
Switch Type	Subminiature Precision	Subminiature	Subminiature	Subminiature	Sealed Subminiature	Sealed Subminiature	Subminiature	Standard Precision
Poles/Throws	SPDT	SPDT	SPDT	SPDT	SPDT	SPDT	SPDT	SPST, SPDT
Maximum Current	7 Amps	3 Amps	3 Amps	0.1 Amps	3 Amps	3 Amps	300 m Amps	20 Amps
Terminations								
Solder			•	•	•	•	•	•
Quick Connect								•
Wire Leads					•	•		
Screw								•
PCB Thru-hole	•	•	•	•	•	•	•	
Flat & Step Base								•
Bushing								15/32-32
Sealed					•	•		
Page No.	J–44	J–47	J–50	J–54	J–57	J-61	J–65	J-71

Snap-acting				
Series	**A**	**TL**	**DS**	**LCB**
Switch Type	General Purpose	Door Interlock	Door Interlock	Subminiature
Poles/Throws	SPST, SPDT, DP	SPDT	SPDT DPDT	SPST SPDT
Maximum Current	30.1 Amps	15 Amps	0.1, 10, 16A	5A
Terminations				
Solder				•
Quick Connect	•	•	•	•
Wire Leads				
Screw		•		
PCB Thru-hole				•
Flat & Step Base				
Bushing	3/8-23			
Page No.	J–77	J-82	J-85	J-88

HOW TO CHOOSE PRECISION SNAP-ACTING SWITCHES AND ACTUATORS

This catalog describes electric switches that satisfy the following definition: “A precision snap-acting switch is a mechanically operated electric switch having predetermined and accurately controlled characteristics and having contacts other than blade-and-jaw, or mercury-type, where the maximum separation between any butting contacts is 1/8 inch.”

In choosing a switch, the first thing to consider is its electrical rating. As a basic part of an electric control system, the switch must be able to carry the full load current in the system, to interrupt this current, and to handle any surge of current that may occur when the switch contacts close or any transients that occur when contacts open.

The method of applying mechanical force to operate the switch influences the choice of actuator. Basic switches are provided with leaf spring, levers, or other linkages between the switch plunger and the actuating device, which are typically used to provide additional overtravel and reduce the operating force. The differential travel measured at the free end of the leaf or lever is considerably greater than that measured at the switch plunger and max. operating force is adequately smaller. Table 1 relates types of actuators to means of applying operating force.

MOTION OF APPLIED OPERATING FORCES	ACTUATOR								
	Pin	Overtravel Plunger	Roller Plunger	Leaf	Roller Leaf	Hinged Lever	Hinged Roller Lever	Reverse-Acting Hinged Lever	Reverse-Acting Hinged Roller Lever
	Basic	D, Q, J	R	L	W	T	A	Y	F
CAM Rotary			√	√	√	√	√	√ [1]	√ [1]
LEVER Angular	√	√ [2]	√ [2]	√	√	√	√	√	√
SLIDE Wedge			√		√		√		√
PLUNGER In-Line	√ [3]	√		√		√		√	
BI-METAL or BELLOWS Slow In-Line	√	√							

√ Suitable for this actuating method.

[1] Where large overtravel is required. [2] Do not use when there is side thrust.

[3] Use only where the actuating device contains provisions for absorbing excess over travel.

ELECTRICAL LIFE CHARACTERISTICS FOR SNAP-ACTING SWITCHES

The primary limitation to electrical life of a switch is wear of the contacts. In general, contacts wear out more quickly as current or voltage is increased and as power-factor is decreased. This is indicated by the graph below, which shows electrical life of switches tested under ordinary atmospheric conditions, operated 60 times a minute, with AC power handled on both the normally open and the normally closed contacts. The high inrush current encountered in lamp loads and in motor or other inductive loads is responsible for decreased contact life under such loading.

TYPICAL ELECTRICAL LIFE OF TYPE HB SWITCH

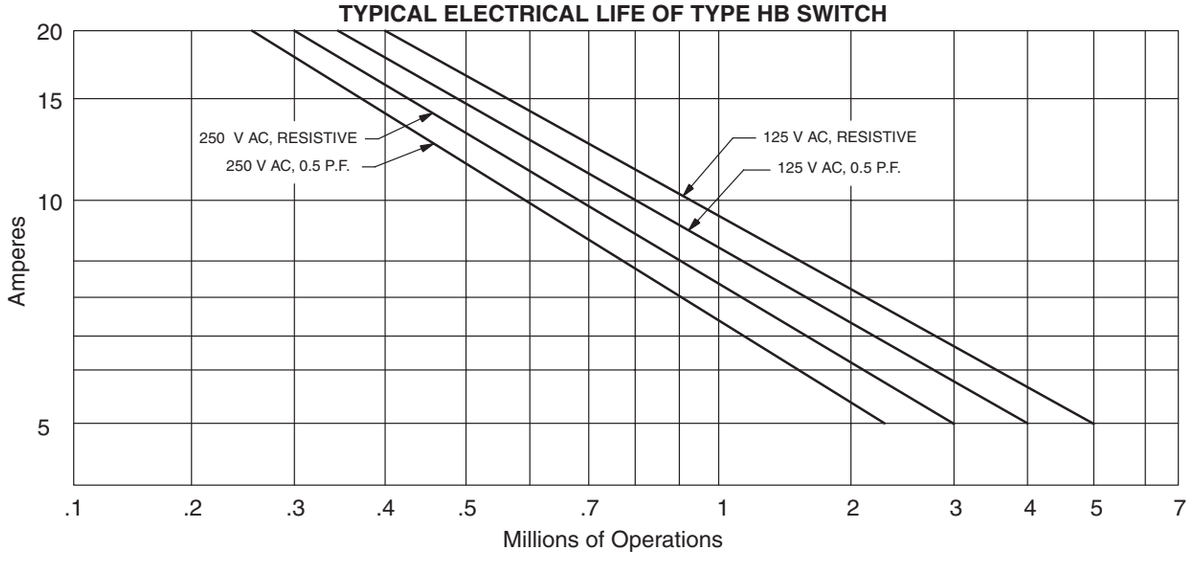

MECHANICAL LIFE CHARACTERISTICS FOR SNAP-ACTING SWITCHES

Fatigue of the internal spring blade is the limiting factor in the mechanical life of a switch. This fatigue can often be reduced and the life thereby extended, by reducing overtravel. One method is to use a leaf or lever actuator or a plunger containing an overtravel-absorbing spring. Tests on switches of the types covered in this catalog indicate that the mechanical life of a lever actuated switch is more than double that of a switch having the operating force applied directly on the pin.

Mechanical life is also affected by the combination of total travel and operating force. Thus a high-sensitivity switch which has small travel and light force, has about twice the life expectancy of a high current type switch, in which the travel/ force combination is relatively high. Experience indicates that million of operations is a reasonable mechanical life expectancy for a basic snap switch.

For the best mechanical life, the applied overtravel force should not exceed three times the operating force.

AC RATINGS FOR SNAP-ACTING SWITCHES

Switches used to control alternating current loads, up to the ratings shown in this catalog, will maintain repeatability of characteristics and provide long electrical life (refer to graph on page K-3). In special circumstances, higher currents or voltages may be controlled, but changes in performance must be anticipated.

Switches used to control “dry circuits” can be furnished, but factory recommendations should be secured.

DC RATINGS FOR SNAP-ACTING SWITCHES

To use the table below, determine the contact separation of the switch and select the ratings from the appropriate line. The maximum current rating must be limited to the current value listed for that switch type in the body of the catalog.

		ACTUATOR				INDUCTIVE			
		Heater Load		Lamp Load (tungsten)		Motor, Relay, or Solenoid Load			
						Sea Level		50,000 Feet	
CONTACT SEPARATION	DIRECT CURRENT VOLTAGE	Normally Open Contact	Normally Closed Contact	Normally Open Contact	Normally Closed Contact	Normally Open Contact	Normally Closed Contact	Normally Open Contact	Normally Closed Contact
Inches	Volts	Amperes	Amperes	Amperes	Amperes	Amperes	Amperes	Amperes	Amperes
.010	6-8	15.0	20.0	1.5	3.0	8.0	8.0	7.0	7.0
	12-14	15.0	20.0	1.5	3.0	5.0	5.0	5.0	5.0
	24-30	2.0	2.0	1.5	2.0	1.0	1.0	1.0	1.0
	110-115	0.4	0.4	0.4	0.4	0.03	0.03	0.02	0.02
	220-230	0.2	0.2	0.2	0.2	0.02	0.02	0.01	0.01
.020	6-8	15.0	20.0	1.5	3.0	15.0	20.0	15.0	15.0
	12-14	15.0	20.0	1.5	3.0	10.0	10.0	8.0	8.0
	24-30	6.0	6.0	1.5	2.0	5.0	5.0	2.0	2.0
	110-115	0.4	0.4	0.4	0.4	0.05	0.05	0.03	0.03
	220-230	0.2	0.2	0.2	0.2	0.03	0.03	0.02	0.02
.040	6-8	15.0	20.0	1.5	3.0	15.0	20.0	150	150
	12-14	15.0	20.0	1.5	3.0	15.0	20.0	15.0	15.0
	24-30	10.0	10.0	1.5	2.0	10.0	10.0	5.0	5.0
	110-115	0.6	0.6	0.6	0.6	0.1	0.1	0.05	0.05
	220-230	0.3	0.3	0.3	0.3	0.05	0.05	0.03	0.03
.070	6-8	15.0	20.0	1.5	3.0	15.0	20.0	15.0	15.0
	12-14	15.0	20.0	1.5	3.0	15.0	20.0	15.0	15.0
	24-30	15.0	20.0	1.5	2.0	10.0	10.0	7.5	7.5
	110-115	0.75	0.75	0.75	0.75	0.4	0.4	0.2	0.2
	220-230	0.3	0.3	0.3	0.3	0.2	0.2	0.1	0.1

TF Series
Miniature Snap-acting Switches

Features/Benefits

- ***Broad range of operating forces***
- ***Ratings up to 21 AMPS***
- ***Wide variety of actuator styles***
- ***Quick connect terminations***

Typical Applications

- ***Motor controls***
- ***Thermostatics***
- ***Portable tools***

c UL us

Specifications

CONTACT RATING: From low level* to 21 AMPS @ 277 V AC.

ELECTRICAL LIFE: 300,000 cycles at 10 AMPS @ 250 V AC, consult Customer Service Center for typical life of higher rated switches.

INSULATION RESISTANCE: 1,000 M ohm min.

DIELECTRIC STRENGTH: 1,500 Vrms min. @ sea level.

OPERATING TEMPERATURE: –40°F to 185°F (–40°C to 85°C).

OPERATING FORCE: From 15 to 400 grams at actuator button available.

MOUNTING: Torque screws 2-5 in/lbs.

* Low Level=conditions where no arcing occurs during switching, i.e., 0.4 VA max. @ 20 V AC or DC max. Standard electrical life per UL 1054, rated for 6,000 operations.

Materials

SWITCH HOUSING: Thermoplastic (UL 94V-0).

ACTUATOR BUTTON: Thermoplastic (UL 94V-0).

SPRING: Copper alloy.

PIVOT: Brass alloy.

MOVABLE CONTACTS: Gold alloy for ratings 1 AMP or less. Fine silver for ratings greater than 1 AMP up to 15 AMPS. Precious metal alloy for ratings greater than 15 AMPS.

STATIONARY CONTACTS: Gold alloy for ratings 1 AMP or less. Fine silver for ratings greater than 1 AMP.

TERMINALS: Brass alloy for ratings up to 10 AMPS. Copper alloy for ratings greater than 10 AMPS.

NOTE: Specifications and materials listed above are switches with standard options. For information on specific and custom switches, consult Customer Service Center.

Build-A-Switch

To order, simply select desired option from each category and place in the appropriate box. Available options are shown and described on pages J-6 through J-11. For additional options not shown in catalog, consult Customer Service Center.

T F — □□ — □□ — □ — □□□ — □□ — □

Series
TF SP, Mom.

Operating Force
CJ 5.29 oz./150 grams
CC .53 oz./15 grams
CD .88 oz./25 grams
CF 1.76 oz./50 grams
CG 2.65 oz./75 grams
EC 7.94 oz./225 grams
EE 14.11 oz./400 grams

Electrical Rating
J6 15 A, 277 V AC; 1/2 HP, 125, 250 V AC; 5 A, 125 V AC "L", 0.5 A, 125 V DC; 0.25 A, 250 V DC
F5 1 A,125 V AC; 1 A, 30 V DC
H8 5 A, 277 V AC; 1/10 HP, 125, 250 V AC
J3 21 A, 277 V AC; 1 HP, 125 V AC; 2 HP, 250 V AC; 5 A, 125 V AC "L"
K6 11 A, 277 V AC; 1/3 HP, 125, 250 V AC; 0.5 A, 125 V DC; 0.25 A, 250 V DC
L3 20 A, 250 V AC; 1 HP, 125 V AC; 2 HP 250 V AC

Mounting Style
S Standard
V Metric

Actuator
P00 Pin plunger
A10 .81" lever roller, high force
A15 1.34" lever roller, high force
A20 1.05" lever roller, low force
A25 1.56" lever roller, low force
T10 .84" lever, high force
T13 1.34" simulated roller, high force
T14 1.29" simulated roller, high force
T15 1.40" lever, high force
T16 2.34" lever, high force
T18 2.75" lever, high force
T20 1.10" lever, low force
T23 1.56" simulated roller, low force
T24 1.50" simulated roller, low force
T25 1.62" lever, low force
T26 2.57" lever, low force
T28 2.97" lever, low force
WP0 Wide pin plunger

Terminations
40 .187" quick connect
4A .250" quick connect
5A .250" offset quick connect
5B .187" offset quick connect

Circuitry
C SPDT
W SPST N.C.
Y SPST N.O.

Dimensions are shown: Inch (mm)
Specifications and dimensions subject to change

SERIES

TF MINIATURE SNAP-ACTING SWITCHES – SP MOMENTARY

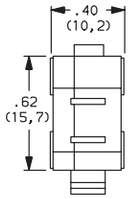

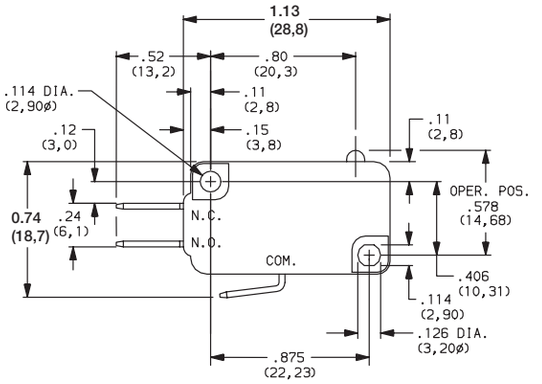

OPERATING FORCE

OPTION CODE	BASIC SWITCH OPERATING FORCE (OZ./GRAMS)
CC	.53 15
CD	.88 25
CF	1.76 50
CG	2.65 75
CJ	5.29 150
EC	7.94 225
EE*	14.11 400

*Minimums may apply, consult Customer Service Center.

Operating Force option 'CC' not available with 'T18 & T26' Actuator options.
Operating force varies with actuator option, see ACTUATOR option section.

ELECTRICAL RATING

OPTION CODE	RoHS COMPLIANT *	RoHS COMPATIBLE *	CONTACT MATERIAL		ELECTRICAL RATING
			MOVABLE CONTACT	STATIONARY CONTACT	
F5	Yes	Yes	Gold alloy	Gold alloy	From low level* to 1 AMP @ 125 V AC, 1 AMP @ 30 V DC.
H8	Yes	Yes	Fine Silver	Fine Silver	5 AMPS @ 277 V AC; 1/10 HP @ 125 & 250 V AC.
J3	Yes	Yes			21 AMPS @ 277 V AC; 1 HP @ 125 V AC; 2 HP @ 250 V AC; 5 AMPS @ 125 V AC "L".
J6	Yes	Yes			15 AMPS @ 277 V AC; 1/2 HP @ 125 & 250 V AC; 5 AMPS @ 125 V AC "L". 0.5 AMP @ 125 V DC; 0.25 AMP @ 250 V DC.
K6	Yes	Yes			11 AMPS @ 277 V AC; 1/3 HP @ 125 & 250 V AC; 0.5 AMP @ 125 V DC; 0.25 AMP @ 250 V DC.
			Silver alloy		
L3	Yes	Yes			20 AMPS @ 250 V AC; 1 HP @ 125 V AC; 2 HP @ 250 V AC

* Note: See Technical Data section of this catalog for RoHS compliant and compatible definitions and specifications.

All models c UL us

Consult Customer Service center for availability and delivery of nonstandard ratings.

* Low Level=conditions where no arcing occurs during switching, i.e., 0.4 VA max. @ 20 V AC or DC max.

Third Angle Projection

Dimensions are shown: Inches (mm)
Specifications and dimensions subject to change

TF Series
Miniature Snap-acting Switches

ELECTRICAL RATING

		OPERATING FORCE						
ELECTRICAL RATING	AMPS (REF.)	CC (15)	CD (25)	CF (50)	CG (75)	CJ (150)	EC (225)	EE (400)
F5	1	•	•	•	•	•	•	
H8	5	•	•	•	•	•	•	•
J3	21	X	X	X	X	•	•	•
J6	15	X	X	X	X	•	•	•
K6	11	X	•	•	•	•	•	•
L3	20	X	X	X	X	•	•	•

• AVAILABLE

x NOT AVAILABLE

** Available with 4A & 5A terminations only, see page J-10.

All models c UL us

Consult Customer Service center for availability and delivery of nonstandard ratings.

* Low Level=conditions where no arcing occurs during switching, i.e., 0.4 VA max. @ 20 V AC or DC max.

MOUNTING STYLE

S STANDARD
For 4-40 screw size

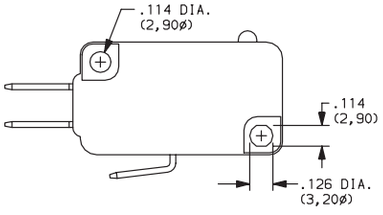

V Metric
For 3 mm screw size

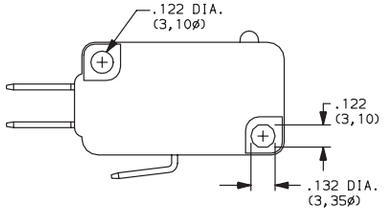

Third Angle Projection

Dimensions are shown: Inch (mm)
Specifications and dimensions subject to change

ACTUATOR

OPTION CODE	FIG.	DIM. A	DIM. B	DIM. C	DIM. D
P00	1	.80 (20,3)	–	.578 ± .015 (14,68 ± 0,38)	–
A10	2	.81 (20,6)	.32 (8,1)	.810 ± .020 (20,57 ± 0,51)	.19 dia. (4,8Ø)
A15	2	1.34 (34,0)	.32 (8,1)	.810 ± .030 (20,57 ± 0,76)	.19 dia. (4,8Ø)
A20	2	1.05 (26,7)	.54 (13,7)	.810 ± .050 (20,57)± 1,27	.19 dia. (4,8Ø)
A25	2	1.56 (39,6)	.54 (13,7)	.810 ± .075 (20,57 ± 1,91)	.19 dia. (4,8Ø)
T10	3	.84 (21,3)	.32 (8,1)	.600 ± .020 (15,24 ± 0,51)	–
T15	3	1.40 (35,6)	.32 (8,1)	.600 ± .040 (15,24 ± 1,02)	–
T16	3	2.34 (59,4)	.32 (8,1)	.600 ± .065 (15,24 ± 1,65)	–
T18	3	2.75 (69,9)	.32 (8,1)	.600 ± .080 (15,24 ± 2,03)	–
T20	3	1.10 (27,9)	.54 (13,7)	.600 ± .050 (15,24 ± 1,27)	–
T25	3	1.62 (41,1)	.54 (13,7)	.600 ± .070 (15,24 ± 1,78)	–
T26	3	2.57 (65,3)	.54 (13,7)	.600 ± .150 (15,24 ± 3,81)	–
T28	3	2.97 (75,4)	.54 (13,7)	.600 ± .187 (15,24) ± 4,75	–
T13	4	1.34 (34,0)	.32 (8,1)	.810 ± .030 (20,57 ± 0,76)	.19 dia. (4,8Ø)
T14	4	1.29 (32,8)	.32 (8,1)	.730 ± .030 (18,54 ± 0,76)	.19 dia. (6,4Ø)
T23	4	1.56 (39,6)	.54 (13,7)	.810 ± .065 (20,57 ± 1,65)	.19 dia. (4,8Ø)
T24	4	1.50 (38,1)	.54 (13,7)	.730 ± .060 (18,54)± 1,52	.25 dia. (6,4Ø)
WP0	5	.80 (20,3)	–	.635 ± .015 (16,13 ± 0,38)	–

NOTE: Switch characteristics chart on following page.

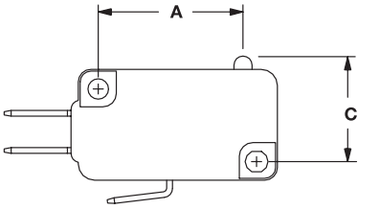

FIG. 1
Pin Plunger

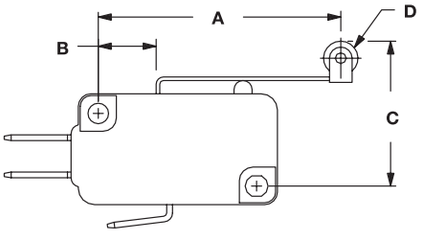

FIG. 2
Lever Roller

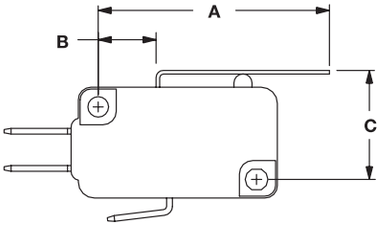

FIG. 3
Lever

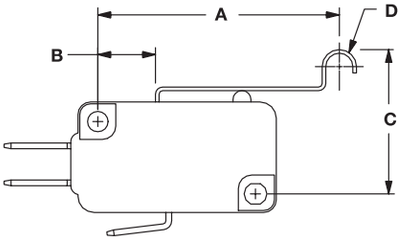

FIG. 4
Simulated Roller

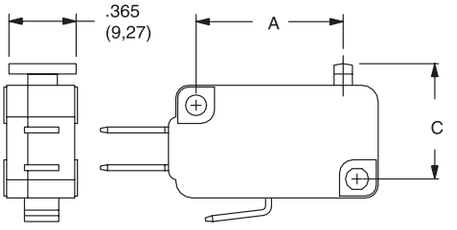

FIG. 5
Wide Pin

Third Angle Projection

Dimensions are shown: Inches (mm)
Specifications and dimensions subject to change

ACTUATOR

SWITCH CHARACTERISTICS

OPTION CODE	MAXIMUM OPERATING FORCE (OZ./GRAMS)							MINIMUM RELEASE FORCE (OZ./GRAMS)							MAXIMUM DIFFERENTIAL TRAVEL	MAXIMUM PRETRAVEL	MINIMUM OVERTRAVEL
	CC (15)	CD (25)	CF (50)	CG (75)	CJ (150)	EC (225)	EE (400)	CC (15)	CD (25)	CF (50)	CG (75)	CJ (150)	EC (225)	EE (400)	ALL FORCES	ALL FORCES	ALL FORCES
A10	.63 18	1.06 30	2.29 65	3.17 90	6.35 180	7.94 225	14.11 400	.21 6	.35 10	.35 10	.53 15	.71 20	1.98 56	3.88 110	.015 (0,38)	.060 (1,52)	.030 (0,76)
A15	.28 8	.42 12	1.06 30	1.59 45	3 85	4.59 130	7.94 225	.07 2	.14 4	.14 4	.18 5	.35 10	.71 20	2.82 80	.030 (0,76)	.100 (2,54)	.065 (1,65)
A20	0.53 15	0.71 20	1.41 40	2.12 60	4.23 120	6 170	9.7 275	0.07 2	0.11 3	0.11 3	0.18 5	0.42 12	0.71 20	1.41 40	0.025 (0,64)	0.12 (3,05)	0.055 (1,40)
A25	.18 5	.28 8	56 16	85 24	1.69 48	2.65 75	4.41 125	.04 1	.07 2	.07 2	.07 2	.21 6	.35 10	.71 20	.050 (1,27)	.250 (6,35)	.120 (3,05)
P00	.53 15	.88 25	1.76 50	2.65 75	5.29 150	7.94 225	14.11 400	.21 6	.35 10	.35 10	.53 15	1.23 35	1.98 56	3.88 110	.010 (0,25)	.047 (1,19)	.050 (1,27)
T10	.63 18	1.06 30	2.29 65	3.17 90	6.35 180	7.94 225	14.11 400	.21 6	.35 10	.35 10	.53 15	.71 20	1.98 56	3.88 110	.015 (0,38)	.060 (1,52)	.030 (0,76)
T13	.28 8	.42 12	1.06 30	1.59 45	3 85	4.59 130	7.94 225	.07 2	.14 4	.14 4	.18 5	.35 10	.71 20	2.82 80	.030 (0,76)	.100 (2,54)	.065 (1,65)
T14	.28 8	.42 12	1.23 35	1.76 50	3.17 90	4.76 135	7.94 225	.07 2	.14 4	.14 4	.18 5	.35 10	.71 20	2.82 80	.030 (0,76)	.100 (2,54)	.060 (1,52)
T15	.25 7	.42 12	1.06 30	1.41 40	2.82 80	4.41 125	7.94 225	.07 2	.14 4	.14 4	.18 5	.28 8	.63 18	2.82 80	.030 (0,76)	.110 (2,79)	.065 (1,65)
T16	.18 5	.28 8	.53 15	.78 22	1.59 45	2.47 70	4.23 120	.04 1	.07 2	.07 2	.07 2	.28 8	.35 10	.71 20	.045 (1,14)	.250 (6,35)	.125 (3,18)
T18	N/A	.21 6	.42 12	.71 20	1.41 40	2.12 60	3.53 100	N/A	.04 1	.04 1	.07 2	.18 5	.28 8	.56 16	.062 (1,57)	.300 (7,62)	.155 (3,94)
T20	.53 15	.71 20	1.41 40	2.12 60	4.23 120	6 170	9.70 275	.21 6	.35 10	.35 10	.53 15	.71 20	1.98 56	3.88 110	.030 (0,76)	.140 (3,56)	.060 (1,52)
T23	.18 5	.28 8	.56 16	.85 24	1.69 48	2.65 75	4.41 125	.04 1	.07 2	.07 2	.07 2	.21 6	.35 10	.71 20	.050 (1,27)	.250 (6,35)	.120 (3,05)
T24	0.18 5	0.28 8	0.56 16	0.88 25	1.76 50	2.65 75	4.76 135	0.04 1	0.07 2	0.07 2	0.11 3	0.21 6	0.35 10	0.71 20	.005 (1,27)	0.23 (5,84)	0.11 (2.79)
T25	.18 5	.28 8	.53 15	.88 25	1.59 45	2.47 70	4.23 120	.04 1	.07 2	.07 2	.07 2	.21 6	.35 10	.99 28	.055 (1,40)	.250 (6,35)	.125 (3,18)
T26	N/A	.14 4	.28 8	.42 12	.85 24	1.27 36	2.26 64	N/A	.04 1	.04 1	.05 1.5	.12 3.5	.21 6	.39 11	.100 (2,54)	.500 (12,70)	.235 (5,97)
T28	N/A	N/A	N/A	0.42 12	0.71 20	1.06 30	1.94 55	N/A	N/A	N/A	0.04 1	0.11 3	0.18 5	0.32 9	0.12 (3,05)	.0.560 (14.22)	0.285 (7,24)
WP0	.53 15	.88 25	1.76 50	2.65 75	5.29 150	7.94 225	14.11 400	.21 6	.35 10	.35 10	.53 15	1.23 35	1.97 56	3.88 110	.010 (0.25)	.047 (1,19)	.030 (0,51)

NOTE: For basic switch operating forces, see page J-6.

HIGH FORCE, LOW MOTION PIVOT POSITION

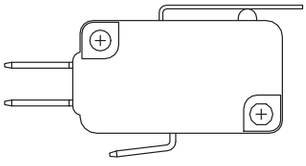

Available with actuators A10, A15, T10, T13, T14, T15, T16 and T18.

LOW FORCE, HIGH MOTION PIVOT POSITION

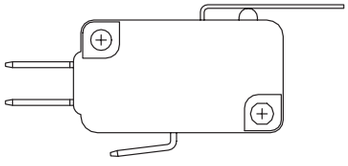

Available with actuators A20, A25, T20, T23, T24, T25, T26, and T28.

NOTE: Lever actuator options are available in either of two pivot positions.
Levers located in the forward pivot position have lower forces and higher motions.
Levers located in the rear pivot position have higher forces and lower motions.

Third Angle Projection

Dimensions are shown: Inch (mm)
Specifications and dimensions subject to change

TERMINATIONS

40 **.187" QUICK CONNECT**

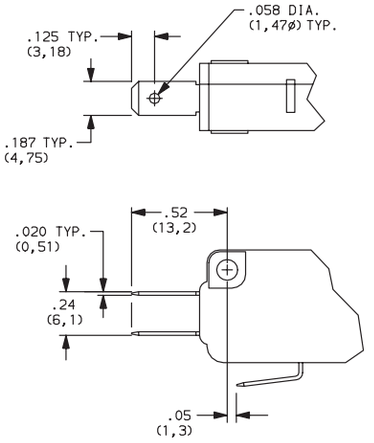

4A .250" QUICK CONNECT

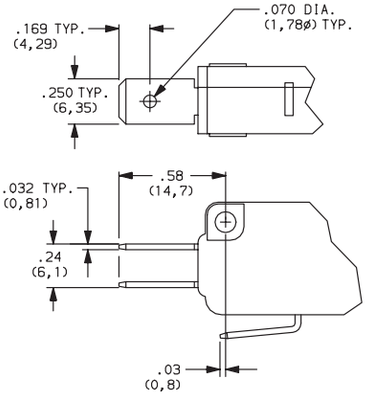

5A OFFSET .250" QUICK CONNECT

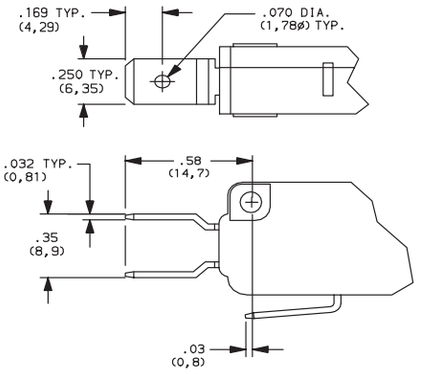

5B OFFSET .187" QUICK CONNECT

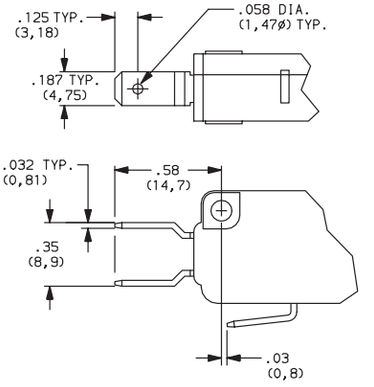

CIRCUITRY

C SPDT (Single Pole, Double Throw)

W SPST N.C. (Single Pole, Single Throw, Normally Closed)

Y SPST N.O. (Single Pole, Single Throw, Normally Open)

Third Angle Projection

Dimensions are shown: Inches (mm)
Specifications and dimensions subject to change

TFS Series
Splash Proof Miniature Snap-acting Switches

Features/Benefits

- ***Reliable snap action mechanism***
- ***Low cost - high performance***
- ***RoHS compatible***

Typical Applications

- ***Alarm devices / Home security***
- ***Air conditioner***
- ***Food processor***
- ***Water heaters***
- ***Industrial***
- ***Forklifts***

UL61058-1

Specifications

CONTACT RATING / ELECTRICAL LIFE:
- 0.1A @ 125/250 V AC / 10,000 operations
- 3A @ 125/250 VAC / 10,000 operations
- 6A @ 125/250 VAC / 10,000 operations
- 10A @ 125/250 VAC / 10,000 operations

ELECTRICAL OPERATING FREQUENCY: 10-30 operations per min.
MECHANICAL LIFE: 1,000,000 operations
MECHANICAL OPERATING FREQUENCY: 120 operations per min.
INSULATION RESISTANCE: (at 500 VDC/minute) 100 M ohm min.
DIELECTRIC STRENGTH: 1500 VAC (50 -60 Hz)
OPERATING TEMPERATURE: –40°C to 85°C (with no icing)
OPERATING FORCE: 200 grams.

Materials

CASE: Nylon
COVER: PBT
ACTUATOR: PBT
MOVABLE CONTACTS: Silver alloy
TERMINALS: Brass
LEVER: Stainless steel
WIRE: PVC+CU

NOTE: Specifications and materials listed above are for switches with standard options. For information on specific and custom switches, consult Customer Service Center.

Build-A-Switch

To order, simply select desired option from each category and place in the appropriate box. Available options are shown and described on pages J-12 thru J-15. For additional options not shown in catalog, consult Customer Service Center.

T F S — □ □ — S — □ □ □ — 4 0 — □ — □

Electrical Rating

ELECTRICAL RATING	AMPS (GRAMS)	OPERATING FORCE S (200)	D (50)	J (100)	L (150)	H (300)
01	0.1	•	•	•	•	•
03	3	•	•	•	•	•
06	6	•	•	•	•	•
10	10	•	X	X	X	•

• Available
X Not available

Operating Force
- **S** 200 grams
- **D** 50 grams
- **J** 100 grams
- **L** 150 grams
- **H** 300 grams

Actuator Lever Fixed
- **P00** Button
- **T10** Lever - high force
- **T20** Lever - low force
- **A05** Lever roller - High force , short lever
- **A10** Lever roller - high force
- **A20** Lever roller - low force
- **A25** Lever roller - Low force, short lever

Terminal Type
- **40** .187" quick connect

Circuit Arrangement
- **C** SPDT
- **Y** SPST N.O.
- **W** SPST N.C.

Mounting Hole Size
- **NONE** 3.1 mm (3 mm screw clearance hole)
- **S** 2.9 mm (4-40 screw clearance hole)

SERIES

TFS SUB-MINIATURE SNAP-ACTING SWITCHES

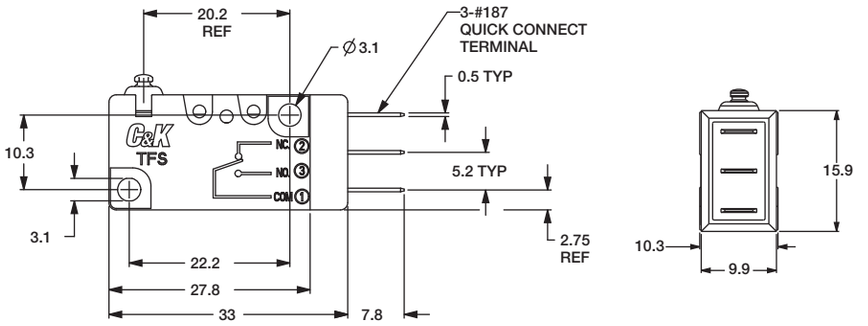

ELECTRICAL RATING

OPTION CODE	RoHS COMPLIANT	RoHS COMPATIBLE	ELECTRICAL RATING
10	Yes	Yes	10A @ 125/250 V AC / 10,000 operations
06	Yes	Yes	6A @ 125/250 VAC / 10,000 operations
03	Yes	Yes	3A @ 125/250 VAC / 10,000 operations
01	Yes	Yes	0.1A @ 125/250 VAC / 10,000 operations

OPERATING FORCE

OPTION CODE	BASIC SWITCH OPERATING FORCE
S	200 GRAMS
D	50 grams
J	100 grams
L	150 grams
H	300 grams

Third Angle Projection

Dimensions are shown: mm
Specifications and dimensions subject to change

TFS Series
Splash Proof Miniature Snap-acting Switches

ACTUATOR

P00 BUTTON

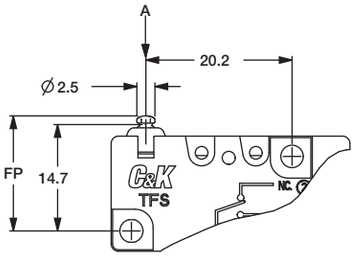

Measure at Point "A"

Max. operating force	200 grams
Min. release force	30 grams
Operating position OP	14.7 ± 0.4 mm
Max. movement differential	0.4 mm
Min. over travel OT	1.0 mm
Max. pre-travel PT	1.2 mm

T10 LEVER, HIGH FORCE

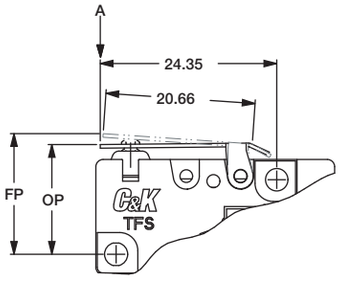

Measure at Point "A"

Max. operating force	160 grams
Min. release force	25 grams
Operating position OP	15.1 ± 0.6 mm
Max. movement differential	0.6 mm
Min. over travel OT	1.1 mm
Max. pre-travel PT	2.6 mm

T20 LEVER, LOW FORCE

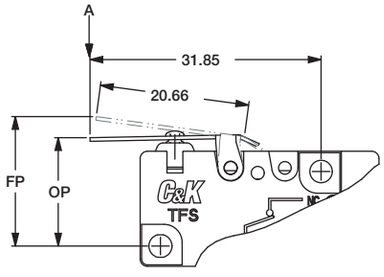

Measure at Point "A"

Max. operating force	90 grams
Min. release force	10 grams
Operating position OP	15 ± 1.1 mm
Max. movement differential	1.1 mm
Min. over travel OT	1.2 mm
Max. pre-travel PT	5.1 mm

A05 LEVER ROLLER HIGH FORCE, SHORT LEVER

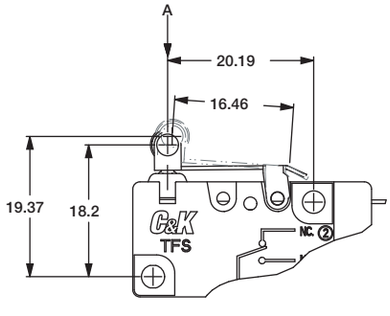

Measure at Point "A"

Max. operating force	200 grams
Min. release force	30 grams
Operating position OP	20.6 ± 0.5 mm
Max. movement differential	0.5 mm
Min. over travel OT	1.0 mm
Max. pre-travel PT	2.1 mm

A10 LEVER ROLLER HIGH FORCE

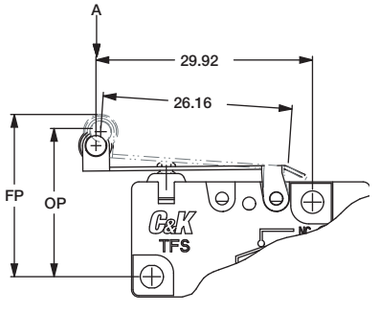

Measure at Point "A"

Max. operating force	130 grams
Min. release force	20 grams
Operating position OP	20.4 ± 0.7 mm
Max. movement differential	0.7 mm
Min. over travel OT	1.3 mm
Max. pre-travel PT	3.3 mm

A20 LEVER ROLLER LOW FORCE

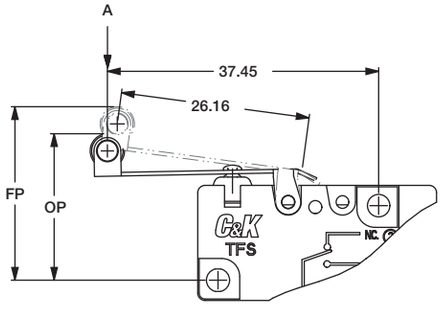

Measure at Point "A"

Max. operating force	70 grams
Min. release force	10 grams
Operating position OP	20.2 ± 1.2 mm
Max. movement differential	1.4 mm
Min. over travel OT	1.5 mm
Max. pre-travel PT	6.5 mm

Third Angle Projection

Dimensions are shown: mm
Specifications and dimensions subject to change

ACTUATOR

A25 LEVER ROLLER
LOW FORCE, SHORT LEVER

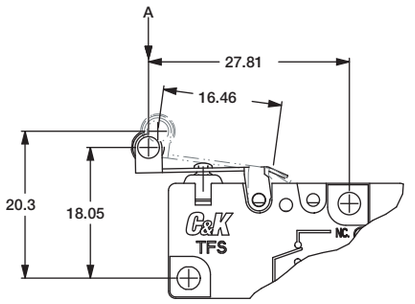

Measure at Point "A"

Max. operating force	150 grams
Min. release force	15 grams
Operating position OP	20.4 ± 0.9 mm
Max. movement differential	0.9 mm
Min. over travel OT	1.2 mm
Max. pre-travel PT	4.2 mm

TERMINAL TYPE

40 .187" QUICK CONNECT

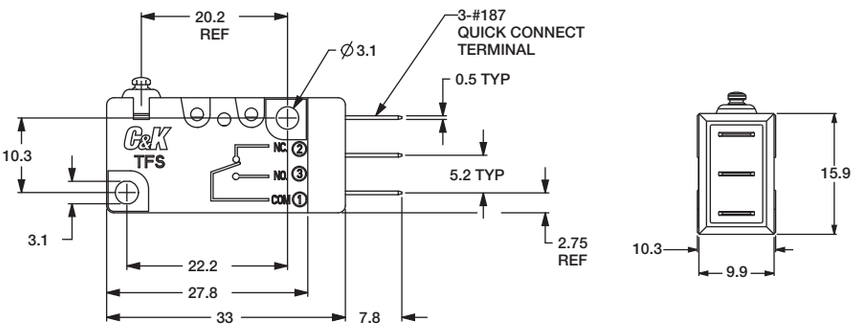

CIRCUITRY

C SPDT (Single Pole, Double Throw)

Y SPST N.O. (Single Pole, Single Throw, Normally Open)

W SPST N.C. (Single Pole, Single Throw, Normally Closed)

MOUNTING HOLE SIZE

NONE 3.1 mm (3mm SCREW CLEARANCE HOLE)

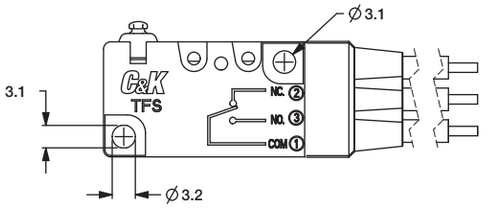

S 2.9 mm (4-40 SCREW CLEARANCE HOLE)

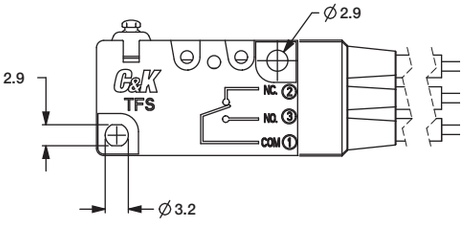

Third Angle Projection

Dimensions are shown: mm
Specifications and dimensions subject to change

TFS Series
Sealed Miniature Snap-acting Switches (Water Proof)

Features/Benefits

- ***IP67***
- ***Reliable snap action mechanism***
- ***Low cost - high performance***
- ***RoHS compatible***

Typical Applications

- ***Alarm devices / Home security***
- ***Air conditioner***
- ***Food processor***
- ***Water heaters***
- ***Industrial***
- ***Forklifts***

UL61058-1

Specifications

CONTACT RATING / ELECTRICAL LIFE:
- 0.1A @ 125/250 V AC / 10,000 operations
- 3A @ 125/250 VAC / 10,000 operations
- 6A @ 125/250 VAC / 10,000 operations
- 10A @ 125/250 VAC / 10,000 operations

ELECTRICAL OPERATING FREQUENCY: 10-30 operations per min.
MECHANICAL LIFE: 1,000,000 operations
MECHANICAL OPERATING FREQUENCY: 120 operations per min.
INSULATION RESISTANCE: (at 500 VDC/minute) 100 M ohm min.
DIELECTRIC STRENGTH: 1500 VAC (50 -60 Hz)
OPERATING TEMPERATURE: see wire type
OPERATING FORCE: 200 grams.

Materials

CASE: Nylon
COVER: PBT
ACTUATOR:PBT
MOVABLE CONTACTS: Silver alloy.
TERMINALS: Brass.
LEVER: Stainless steel
WIRE: PVC+CU

NOTE: Specifications and materials listed above are for switches with standard options. For information on specific and custom switches, consult Customer Service Center.

Build-A-Switch

To order, simply select desired option from each category and place in the appropriate box. Available options are shown and described on pages J-17 thru J-19. For additional options not shown in catalog, consult Customer Service Center.

T F S [ ][ ] S [ ][ ][ ] W [ ] [ ] [ ] [ ]

Electrical Rating
see chart below

Operating Force
- **S** 200 grams
- **D** 50 grams
- **J** 100 grams
- **L** 150 grams
- **H** 300 grams

Actuator Lever Fixed
- **P00** Button
- **T10** Lever - high force
- **T20** Lever - low force
- **A05** Lever roller - High force , short lever
- **A10** Lever roller - high force
- **A20** Lever roller - low force
- **A25** Lever roller - Low force, short lever

Terminal Type
- **W** Wire

Circuit Arrangement
- **C** SPDT
- **Y** SPST N.O.
- **W** SPST N.C.

Wire Type
- **C** 16 AWG
- **D** 18 AWG
- **E** 20 AWG
- **F** 22 AWG
- **G** 24 AWG
- **H** 26 AWG

OPERATING TEMPERATURE

-40˚C to + 85˚C (with UL1015 wire)

Wire UL #
- **B** UL1015 (T55)

Mounting Hole Size
- **NONE** 3.1 mm (3 mm screw clearance hole)
- **S** 2.9 mm (4-40 screw clearance hole)

ELECTRICAL RATING	AMPS	WIRE TYPE C 16AWG	D 18AWG	E 20AWG	F 22AWG	G 24AWG H 26AWG
01	0.1	•	•	•	•	•
03	3	•	•	•	X	X
06	6	•	•	X	X	X
10	10	•	X	X	X	X

• Available
X Not available

Dimensions are shown: mm
Specifications and dimensions subject to change

SERIES

TFS SUB-MINIATURE SNAP-ACTING SWITCHES – WATERPROOF

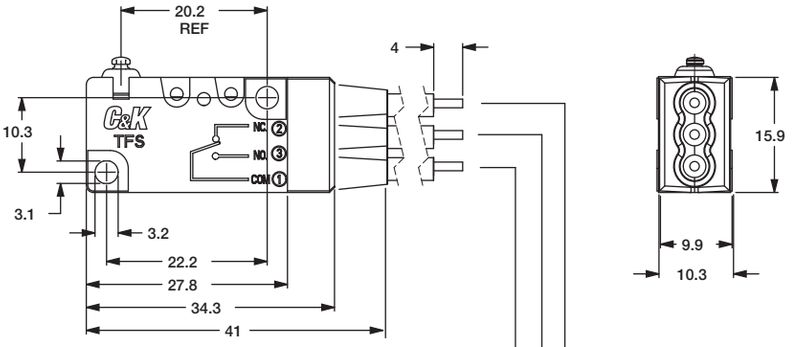

COM : BLACK / UL1015 16AWG OR EQUIVALENT
NC : RED / UL1015 16AWG OR EQUIVALENT
NO : BLUE / UL1015 16AWG OR EQUIVALENT

ELECTRICAL RATING

OPTION CODE	RoHS COMPLIANT	RoHS COMPATIBLE	ELECTRICAL RATING
10	Yes	Yes	10A @ 125/250 V AC / 10,000 operations
06	Yes	Yes	6A @ 125/250 VAC / 10,000 operations
03	Yes	Yes	3A @ 125/250 VAC / 10,000 operations
01	Yes	Yes	0.1A @ 125/250 VAC / 10,000 operations

OPERATING FORCE

OPTION CODE	BASIC SWITCH OPERATING FORCE
S	200 GRAMS
D	50 grams
J	100 grams
L	150 grams
H	300 grams

Third Angle Projection

Dimensions are shown: mm
Specifications and dimensions subject to change

TFS Series
Sealed Miniature Snap-acting Switches (Water Proof)

ACTUATOR

P00 BUTTON

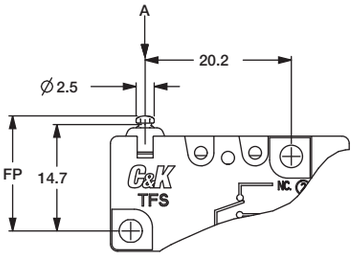

Measure at Point "A"

Max. operating force	200 grams
Min. release force	30 grams
Operating position OP	14.7 ± 0.4 mm
Max. movement differential	0.4 mm
Min. over travel OT	1.0 mm
Max. pre-travel PT	1.2 mm

T10 LEVER, HIGH FORCE

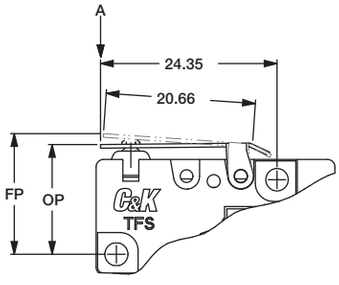

Measure at Point "A"

Max. operating force	160 grams
Min. release force	25 grams
Operating position OP	15.1 ± 0.6 mm
Max. movement differential	0.6 mm
Min. over travel OT	1.1 mm
Max. pre-travel PT	2.6 mm

T20 LEVER, LOW FORCE

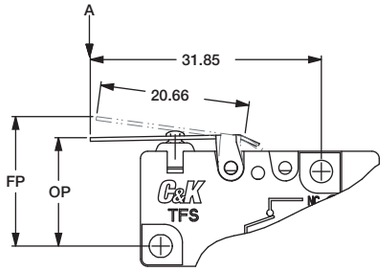

Measure at Point "A"

Max. operating force	90 grams
Min. release force	10 grams
Operating position OP	15 ± 1.1 mm
Max. movement differential	1.1 mm
Min. over travel OT	1.2 mm
Max. pre-travel PT	5.1 mm

A05 LEVER ROLLER HIGH FORCE, SHORT LEVER

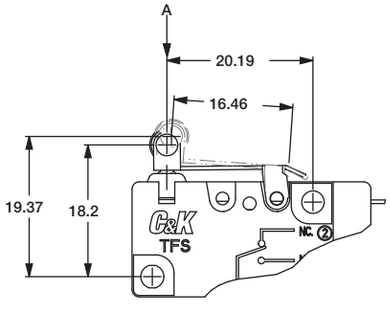

Measure at Point "A"

Max. operating force	200 grams
Min. release force	30 grams
Operating position OP	20.6 ± 0.5 mm
Max. movement differential	0.5 mm
Min. over travel OT	1.0 mm
Max. pre-travel PT	2.1 mm

A10 LEVER ROLLER HIGH FORCE

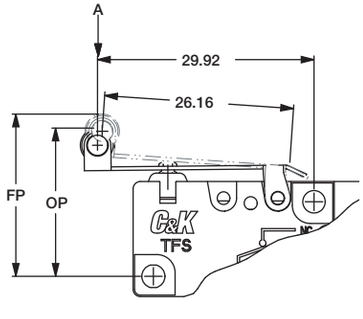

Measure at Point "A"

Max. operating force	130 grams
Min. release force	20 grams
Operating position OP	20.4 ± 0.7 mm
Max. movement differential	0.7 mm
Min. over travel OT	1.3 mm
Max. pre-travel PT	3.3 mm

A20 LEVER ROLLER LOW FORCE

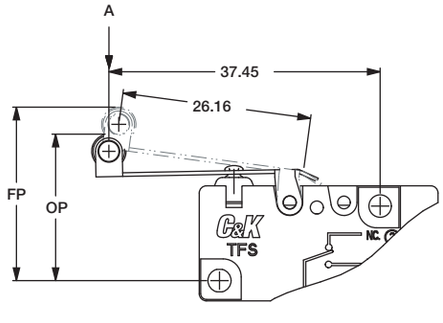

Measure at Point "A"

Max. operating force	70 grams
Min. release force	10 grams
Operating position OP	20.2 ± 1.2 mm
Max. movement differential	1.4 mm
Min. over travel OT	1.5 mm
Max. pre-travel PT	6.5 mm

Third Angle Projection

Dimensions are shown: (mm)
Specifications and dimensions subject to change

ACTUATOR

A25 LEVER ROLLER
LOW FORCE, SHORT LEVER

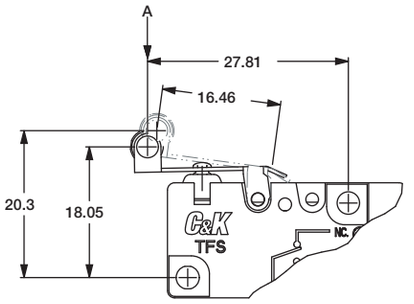

Measure at Point "A"

Max. operating force	150 grams
Min. release force	15 grams
Operating position OP	20.4 ± 0.9 mm
Max. movement differential	0.9 mm
Min. over travel OT	1.2 mm
Max. pre-travel PT	4.2 mm

TERMINAL TYPE

W WIRE UL1015

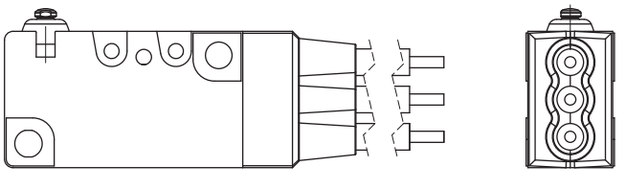

CIRCUITRY

C SPDT (Single Pole, Double Throw)
Y SPST N.O. (Single Pole, Single Throw, Normally Open)
W SPST N.C. (Single Pole, Single Throw, Normally Closed)

WIRE TYPE

C 16 AWG
D 18 AWG
E 20 AWG
F 22 AWG
G 24 AWG
H 26 AWG

MOUNTING HOLE SIZE

NONE 3.1 mm (3mm SCREW CLEARANCE HOLE)

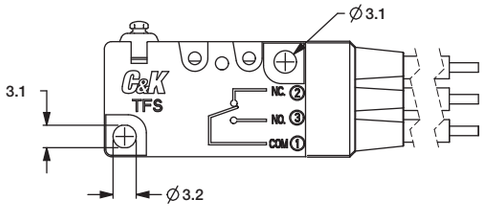

S 2.9 mm (4-40 SCREW CLEARANCE HOLE)

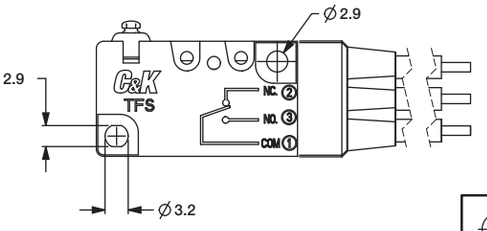

Third Angle Projection

Dimensions are shown: (mm)
Specifications and dimensions subject to change

TF2 Series
Miniature Snap-acting Switches

Features/Benefits

- ***Broad range of operating forces***
- ***Ratings up to 10 AMPS***
- ***Wide variety of actuator styles***
- ***Quick connect terminations***

Typical Applications

- ***Motor controls***
- ***Thermostatics***
- ***Portable tools***
- ***Air Conditioner***

Specifications

CONTACT RATING: From low level* to 10 AMPS @125/250 V AC.
ELECTRICAL LIFE: 10,000 cycles
MECHANICAL LIFE: 1,000,000 cycles at 0.1A and 6A
400,000 cycles at 10A
INSULATION RESISTANCE: 1,000 M ohm min.
DIELECTRIC STRENGTH: 1,500 Vrms min. @ sea level.
OPERATING TEMPERATURE: –40°C to 125°C (–40°C to 85°C).
OPERATING FORCE: From 18 to 330 grams at actuator button available.
MOUNTING: Torque screws 2-5 in/lbs.

* Low Level=conditions where no arcing occurs during switching, i.e., 0.4 VA max. @ 20 V AC or DC max. Standard electrical life per UL 1054, rated for 6,000 operations.

Materials

SWITCH HOUSING: Nylon 6/6
ACTUATOR BUTTON: Nylon 6/6
SPRING: Stainless Steel
PIVOT: Brass Alloy
MOVABLE CONTACTS: See electric rating page J-21
MOVABLE BLADE: BeCu
STATIONARY CONTACTS: See electric rating page J-21
TERMINALS: Brass Alloy

NOTE: Specifications and materials listed above are switches with standard options. For information on specific and custom switches, consult Customer Service Center.

Build-A-Switch

To order, simply select desired option from each category and place in the appropriate box. Available options are shown and described on pages J-21 through J-25. For additional options not shown in catalog, consult Customer Service Center.

T F 2 — □□ — □□ — □ — □□□ — □□ — □

Series
TF2 SP, Mom.

Operating Force
CC 18 grams
CF 45 grams
CG 75 grams
CH 110 grams
CJ 170 grams
EC 230 grams
EE 330 grams

Electrical Rating Chart

OPTION CODE	61058-1	
F5	0.1A 125/250 V AC (T85) Min. 10,000 operations	0.1A 125/250 V AC µT125, 1E4
H8	6A 125/250 V AC (T85) Min. 10,000 operations	6A 125/250 V AC µT125, 1E4
K6	10A 125/250 V AC (T85) Min. 10,000 operations	10(4)A 125/250 V AC µT125, 1E4

* Note: No UL & ENEC 15 safety for Termination option "60"

Mounting Style
S Standard
V Metric

Actuator
P00 Pin plunger
A10 Lever roller 12.5 mm
A15 Lever roller 25.9 mm
A20 Lever roller 12.5 mm
A25 Lever roller 25.9 mm
T10 Lever 14 mm
T14 Simulated roller 24.5 mm
T15 Lever 27.5 mm
T16 Lever 31.7 mm
T17 Lever 35 mm
T20 Lever 14 mm
T24 Simulated lever 24.5 mm
T25 Lever 27.5 mm
T26 Lever 31.7 mm
T27 Lever 35 mm

see chart on following pages for detailed information

Terminations
40 .187" quick connect
4A .250" quick connect
5A .250" off set quick connect
5B .187" off set quick connect
60 Screw style *
10 Solder

Circuitry
C SPDT
W SPST N.C.
Y SPST N.O.

Dimensions are shown: mm
Specifications and dimensions subject to change

SERIES

TF2 MINIATURE SNAP-ACTING SWITCHES

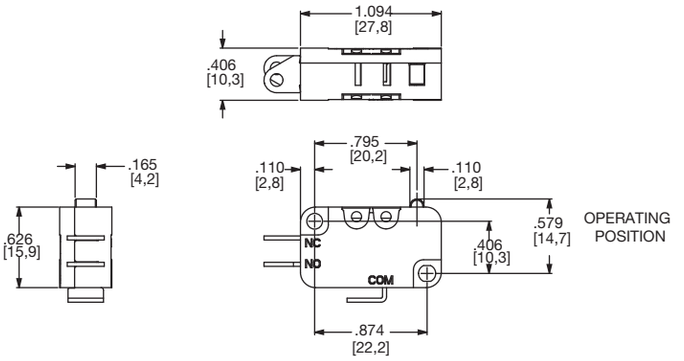

OPERATING FORCE

OPTION CODE	BASIC SWITCH OPERATING FORCE (grams)
CC	18
CF	45
CG	75
CH	110
CJ	170
EC	230
EE*	330

*Minimums may apply, consult Customer Service Center.

ELECTRICAL RATING

	CONTACT MATERIAL			
OPTION CODE	RoHS COMPLIANT *	RoHS COMPATIBLE *	MOVABLE CONTACT	STATIONARY CONTACT
F5	Yes	Yes	Silver alloy	Silver alloy
H8	Yes	Yes		
K6	Yes	Yes		

* Note: See Technical Data section of this catalog for RoHS compliant and compatible definitions and specifications.

All models

Third Angle Projection

Dimensions are shown: inches (mm)
Specifications and dimensions subject to change

TF2 Series
Miniature Snap-acting Switches

ELECTRICAL RATING

INTERNATIONAL RATING SYMBOLS	
µ	Microgap construction (less than 3 mm).
~	Alternating current.
T__	Maximum rated use temperature.
50E3	Cycles over 50,000 at rated current.
10E3	Cycles over 10,000 at rated current.
10(3)	Current Rating: First number represents resistive rating; second number represents inductive (motor) rating.

		OPERATING FORCE						
ELECTRICAL RATING	AMPS (REF.)	CC (18)	CF (45)	CG (75)	CH (110)	CJ (170)	EC (230)	EE (330)
F5	0.1	•	•	•	•	•	•	X
H8	6	X	•	•	•	•	•	•
K6	10	X	X	X	•	•	•	•

• AVAILABLE
x NOT AVAILABLE

All models

Consult Customer Service center for availability and delivery of nonstandard ratings.

* Low Level=conditions where no arcing occurs during switching, i.e., 0.4 VA max. @ 20 V AC or DC max.

MOUNTING STYLE

S STANDARD
For 4-40 screw size

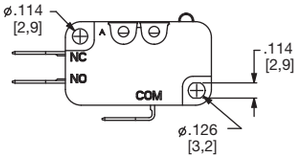

TF2 SWITCH WITH TYPE 40 (.187 QC) TERMINALS AND P00 ACTUATOR SHOWN

NOTE: TORQUE MOUNTING SCREWS 2-5 IN/LBS.

V Metric
For 3 mm screw size

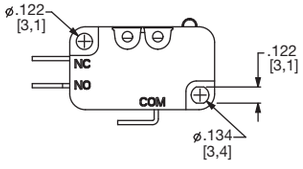

TF2 SWITCH WITH TYPE 10 (SOLDER) TERMINALS AND P00 ACTUATOR SHOWN

NOTE: TORQUE MOUNTING SCREWS 2-5 IN/LBS.

Third Angle Projection

Dimensions are shown: inches (mm)
Specifications and dimensions subject to change

ACTUATOR

OPTION CODE	FIG	DIM. A	DIM. B	DIM. C	DIM. D	DIM. E
P00	2	.795 (20,2)	-	.578 ±.019 (14,70 ± 0,05)	0.068 (1.72)	-
A10	1	.822 (20,9)	.33 (8,4)	.816 ±.050 (20,73 ± 1,27)	.106 (2,70)	∅.19 (∅4,8)
A15	1	1.35 (34,3)	.33 (8,4)	.816 ±.059 (20,73 ± 1,5)	.165 (4,20)	∅.19 (∅4,8)
A20	1	1.05 (26,8)	.56 (14,3)	.816 ±.050 (20,73 ±1,27)	.183 (4,65)	∅.19 (∅4,8)
A25	1	1.58 (40,2)	.56 (14,3)	.816 ±.086 (20,73 ± 2,2)	.366 (9,30)	∅.19 (∅4,8)
T10	3	.882 (22,39)	.33 (8,4)	.602 ±.020 (15,3 ± 0,50)	.110 (2,80)	-
T14	4	1.295 (32,9)	.33 (8,4)	.737 ±.059 (18,72 ± 1,5)	.216 (5,50)	∅.275 (∅7,0)
T15	3	1.405 (35,69)	.33 (8,4)	.600 ±.059 (15,24 ± 1,5)	.232 (5,90)	-
T16	3	1.58 (40,01)	.33 (8,4)	.604 ±.068 (15,35 ± 1,75)	.196 (5,0)	-
T17	3	1.708 (43.39)	.33 (8,4)	.603 ±.062 (15,33 ± 1.57)	.216 (5,50)	-
T20	3	1.11 (28,3)	.56 (14,3)	.604 ±.045 (15,34 ± 1,14)	.204 (5,20)	-
T24	4	1.527 (38,8)	.56 (14,3)	.742 ±.090 (18,84 ± 2,29)	.342 (8,70)	∅.275 (∅7,0)
T25	3	1.631 (41,43)	.56 (14,3)	.609 ±.090 (15,47 ± 2,3)	.381 (9,70)	-
T26	3	1.811 (46,00)	.56 (14,3)	.616 ±.125 (15,65 ± 3.18)	.389 (9,90)	-
T27	3	1.94 (49,3)	.56 (14,3)	.598 ±.150 (15,2 ± 3.8)	.433 (11,0)	-

NOTE: Switch characteristics chart on following page.

Lever Roller

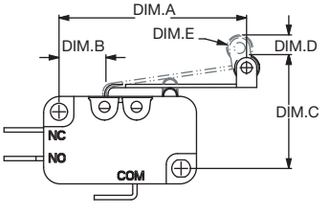

FIG. 1
LEVER ROLLER
TF2XXXXMA1510C

Pin Roller

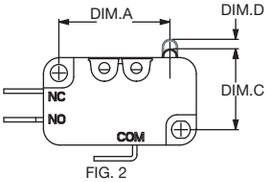

FIG. 2
PIN ROLLER
TF2XXXXMP0010C

Lever

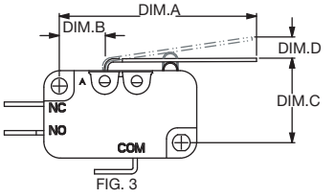

FIG. 3
LEVER
TF2XXXXST1510C SHOWN

Simulated Roller

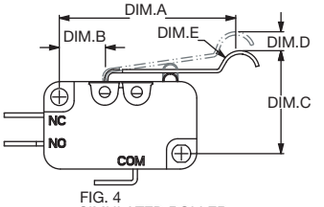

FIG. 4
SIMULATED ROLLER
TF2XXXXST1410C

Third Angle Projection

Dimensions are shown: inches (mm)
Specifications and dimensions subject to change

TF2 Series
Miniature Snap-acting Switches

ACTUATOR

Lever Type		CC	CF	CG	CH Grams	CJ	EC	EE	Pre-Travel max. mm	Max Differential max. mm	Over Travel Min. mm
P00	OF	18	45	75	110	170	230	330	1.72	0.4	0.8
	RF	3	7	14	20	34	42	60			
T10	OF	18	45	75	110	170	230	330	2.8	0.5	0.6
	RF	-	6	11	17	25	35	50			
T20	OF	8	27	43	50	85	120	175	5.2	0.9	1.55
	RF	-	3	5	7	13	17	25			
T14	OF	10	28	43	65	110	140	205	5.5	1.1	1.4
	RF	-	3	5	8	14	17	31			
T24	OF	7	16	24	35	56	70	100	8.7	1.7	3.2
	RF	-	-	-	4	5	9	12			
A10	OF	20	55	80	110	170	230	330	2.7	0.45	0.6
	RF	-	5	11	16	28	31	45			
A20	OF	8	35	55	70	100	120	175	4.65	0.8	1.4
	RF	-	3	5	7	14	18	28			
A15	OF	8	30	45	65	100	125	180	4.2	1.25	1.6
	RF	-	-	5	7	12	16	25			
A25	OF	7	20	30	40	51	65	90	9.3	1.8	2.8
	RF	-	-	-	-	6	8	9			
T17	OF	16	25	35	50	80	100	140	5.5	1.2	0.55
	RF	-	2	4	6	11	14	20			
T27	OF	13	18	24	32	45	55	90	11	2.3	3.6
	RF	-	-	2	3	5	7	10			
T16	OF	15	17	32	55	85	110	150	5	1.05	1.8
	RF	-	-	4	6	12	15	22			
T26	OF	10	12	18	35	45	65	90	9.9	2.05	3.6
	RF	-	-	2	4	6	8	11			
T15	OF	18	22	37	50	86	125	180	5.9	1	1.6
	RF	-	3	5	9	14	17	24			
T25	OF	5	16	25	30	51	65	90	9.7	2.2	3.1
	RF	-	-	3	4	6	8	11			

HIGH FORCE, LOW MOTION PIVOT POSITION

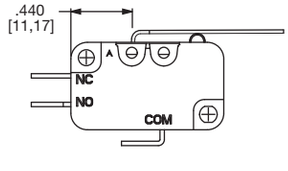

Available with actuators A10, A15, T10, T13, T14, T15, T16 and T18.

LOW FORCE, HIGH MOTION PIVOT POSITION

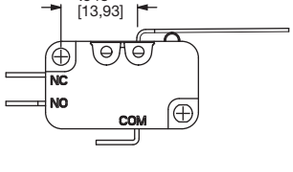

Available with actuators A20, A25, T20, T23, T24, T25, T26, and T28.

NOTE: Lever actuator options are available in either of two pivot positions.
Levers located in the forward pivot position have lower forces and higher motions.
Levers located in the rear pivot position have higher forces and lower motions.

Third Angle Projection

Dimensions are shown: mm
Specifications and dimensions subject to change

TERMINATIONS

40 .187" QUICK CONNECT

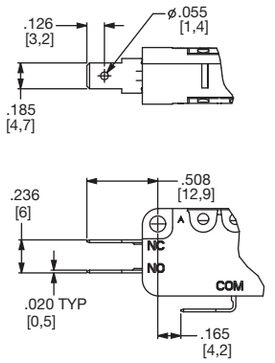

4A .250" QUICK CONNECT

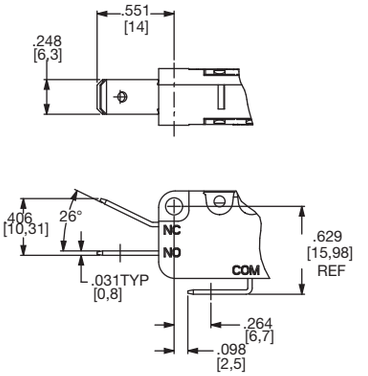

5A .250" OFF SET QUICK CONNECT

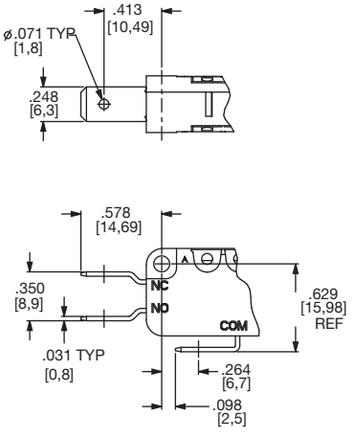

5B .187" OFF SET QUICK CONNECT

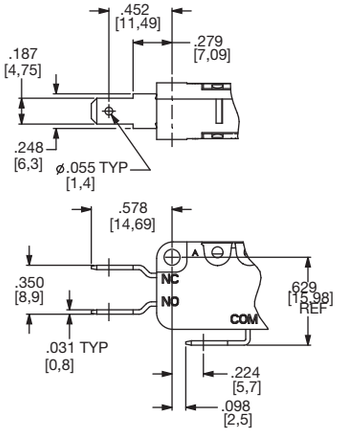

60 SCREW STYLE

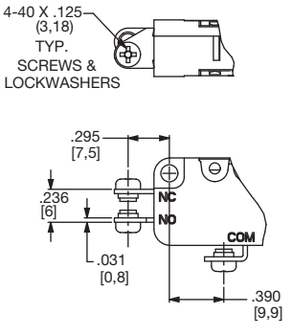

10 SOLDER

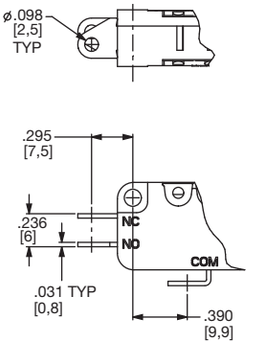

CIRCUITRY

C SPDT (Single Pole, Double Throw)

W SPST N.C. (Single Pole, Single Throw, Normally Closed)

Y SPST N.O. (Single Pole, Single Throw, Normally Open)

Third Angle Projection

Dimensions are shown: inches (mm)
Specifications and dimensions subject to change

TM Series
Miniature Snap-acting Switches

Features/Benefits

- ***Broad range of operating forces available***
- ***Wide variety of actuator and terminal styles***
- ***Cost-effective solution***

Typical Applications

- ***Pumps and motors***
- ***White goods***
- ***Consumer appliances***

Specifications

CONTACT RATING: From low level* to 15 AMPS @ 250 V AC.

ELECTRICAL LIFE: 150,000 cycles at 15 AMPS @ 250 V AC, models with 150 grams operating force. 350,000 cycles at 10 AMPS @ 250 V AC, models with 75 grams operating force.

INSULATION RESISTANCE: 1,000 M ohms min.

DIELECTRIC STRENGTH: 1,000 Vrms min. @ sea level.

OPERATING TEMPERATURE: –67°F to 302°F (–55°C to 150°C).

OPERATING FORCE: 50, 75 and 150 grams at actuator available; refer to chart for lever style forces.

MOUNTING: Torque screws 2-5 in/lbs.

* Low Level=conditions where no arcing occurs during switching, i.e., 0.4 VA max. @ 20 V AC or DC max.

Materials

SWITCH HOUSING: Thermoplastic or general purpose phenolic (UL 94V-0).

ACTUATOR BUTTON: Thermoplastic (UL 94V-0).

SPRING: Copper alloy.

PIVOT: Brass alloy.

MOVABLE CONTACTS: Gold alloy for ratings 1 AMP @ 125 V AC or less. Fine silver for ratings greater than 1 AMP @ 125 V AC.

STATIONARY CONTACTS: Gold alloy for ratings 1 AMP or less. Fine silver for ratings greater than 1 AMP.

TERMINALS: Brass alloy for ratings up to 10 AMPS @ 250 V AC. Copper alloy for 15 AMPS @ 250 V AC ratings.

NOTE: Specifications and materials listed above are for switches with standard options. For information on specific and custom switches, consult Customer Service Center.

Build-A-Switch

To order, simply select desired option from each category and place in the appropriate box. Available options are shown and described on pages J-26 through J-31. For additional options not shown in catalog, consult Customer Service Center.

Available extended electrical life per UL 1054, rated for 100,000 operations, consult factory.

T M — ☐☐ — ☐☐ — ☐ — ☐☐☐ — ☐☐ — ☐

Series
TM SP, Mom.

Operating Force
CG 2.65 oz./75 grams
CJ 5.29 oz.,/150 grams
CF 1.76 oz./50 grams

Electrical Rating
D6 10 A @ 125 & 250 V AC; 1/3 HP @ 125 & 250 V AC;1/2 A @ 125 V DC; 1/4 A @ 250 V DC
G6 15 A @ 125 & 250 V AC; 1/4 A @ 250 V DC; 1/2 A @ 125 V DC; 1/2 HP @ 125 & 250 V AC; 3 A @ 125 V AC "L"
F5 1 A @ 125 V AC; 1 A @ 30 V DC
H3 5 A @ 250 V AC; 1/6 HP @ 125 & 250 V AC

Mounting Style
S Standard
V Metric

Actuator
P00 Pin plunger
A10 .81" lever roller, high force
A15 1.34" lever roller, high force
A20 1.02" lever roller, low force
A25 1.56" lever roller, low force
T10 .84" lever, high force
T13 1.34" simulated roller, high force
T14 1.29" simulated roller, high force
T15 1.40" lever, high force
T16 2.34" lever, high force
T17 2.00" lever, high force
T18 2.75" lever, high force
T20 1.06" lever, low force
T23 1.56" simulated roller, low force
T24 1.50" simulated roller, low force
T25 1.62" lever, low force
T26 2.56" lever, low force
T27 2.22" lever, low force
T28 2.97" lever, low force

Terminations
40 .187" quick connect
10 Solder
4A .250" quick connect
60 Screw

Circuitry
C SPDT
W SPST N.C.
Y SPST N.O.

* All models

Third Angle Projection

Dimensions are shown: Inch (mm)
Specifications and dimensions subject to change

SERIES

TM MINIATURE SNAP-ACTING SWITCHES – SP MOMENTARY

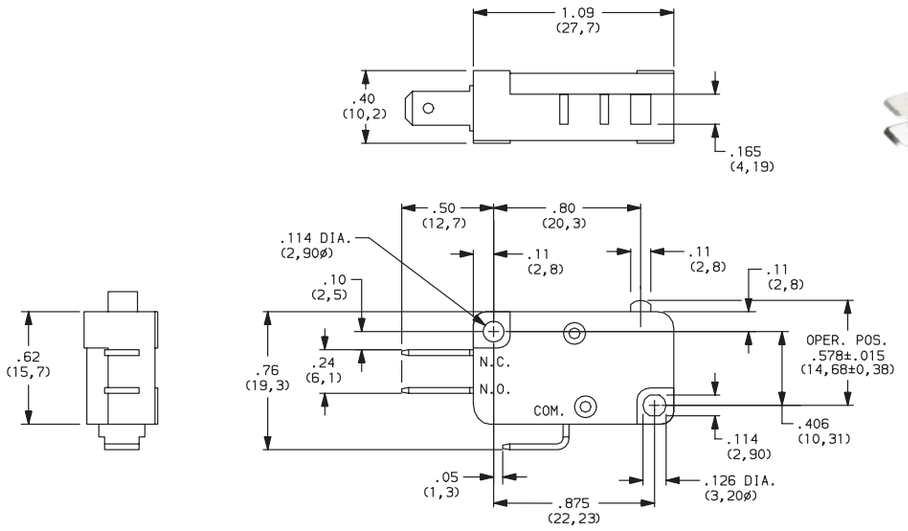

OPERATING FORCE

OPTION CODE	BASIC SWITCH OPERATING FORCE (OZ./GRAMS)
CG	2.65 75
CJ	5.29 150
CF	1.76 50

Operating Force option 'CF' not available with 'T18, T27 and T28' actuator options. Operating force varies with actuator option, see ACTUATOR option section.

ELECTRICAL RATING

OPTION CODE	RoHS COMPLIANT*	RoHS COMPATIBLE*	CONTACT MATERIAL		ELECTRICAL RATING
			MOVABLE CONTACT	STATIONARY CONTACT	
D6	Yes	Yes	Fine Silver	Fine Silver	10 AMPS @ 125 & 250 V AC; 1/3 HP @ 125 & 250 V AC; 1/2 AMP @ 125 V DC; 1/4 AMP @ 250 V DC.
F5	Yes	Yes	Gold alloy	Gold alloy	From low level* to 1 AMP @ 125 V AC, 1 AMP @ 30 V DC.
G6	Yes	Yes	Fine Silver	Fine Silver	15 AMPS @ 125 & 250 V AC; 0.25 AMP @ 250 V DC; 0.5 AMP @ 125 V DC; 1/2 HP @ 125 & 250 V AC; 3 AMPS @ 125 V AC "L".
H3	Yes	Yes			5 AMPS @ 250 V AC; 1/6 HP @ 125 & 250 V AC.

* Note: See Technical Data section of this catalog for RoHS compliant and compatible definitions and specifications.

* All models c UL us

Contact Customer Service Center for availability and delivery of nonstandard ratings.

* Low Level=conditions where no arcing occurs during switching, i.e., 0.4 VA max. @ 20 V AC or DC max.

Third Angle Projection

Dimensions are shown: Inches (mm)
Specifications and dimensions subject to change

TM Series
Miniature Snap-acting Switches

ELECTRICAL RATING

AVAILABLE COMBINATIONS

ELECTRICAL RATING	MAXIMUM OPERATING FORCE (OZ./GRAMS)		
	1.76/50 CF	2.65/75 CG	5.29/150 CJ
D6	•	•	•
F5	•	•	•
G6	X	X	•
H3	•	•	•

• AVAILABLE
X NOT AVAILABLE

* All models

Contact Customer Service Center for availability and delivery of nonstandard ratings.

* Low Level=conditions where no arcing occurs during switching, i.e., 0.4 VA max. @ 20 V AC or DC max.

MOUNTING STYLE

S Standard

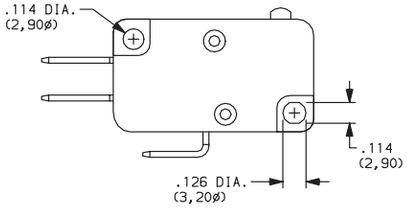

Recommended maximum screw size: 4-40.

V Metric

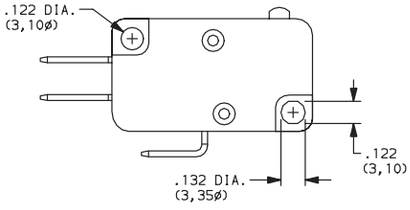

Recommended maximum screw size: 3 mm.

NOTE: Torque mounting screws 2-5 in/lbs.

Third Angle Projection

Dimensions are shown: Inch (mm)
Specifications and dimensions subject to change

ACTUATOR

OPTION CODE	FIG.	DIM. A	DIM. B	DIM. C	DIM. D
P00	2	.80 (20,3)	–	.578 ± .015 (14,68 ± 0,38)	–
A10	1	.81 (20,6)	.36 (9,1)	.810 ± .020 (20,57 ± 0,51)	.19 dia. (4,8Ø)
A15	1	1.34 (34,0)	.36 (9,1)	.810 ± .040 (20,57 ± 1,02)	.19 dia. (4,8Ø)
A20	1	1.03 (26,2)	.58 (14,7)	.810 ± .050 (20,57 ± 1,27)	.19 dia. (4,8Ø)
A25	1	1.56 (39,6)	.58 (14,7)	.810 ± .080 (20,57 ± 2,03)	.19 dia. (4,8Ø)
T10	3	.84 (21,3)	.36 (9,1)	.600 ± .020 (15,24 ± 0,51)	–
T13	4	1.34 (34,0)	.36 (9,1)	.810 ± .040 (20,57 ± 1,02)	.19 dia. (4,8Ø)
T14	4	1.28 (32,5)	.36 (9,1)	.743 ± .050 (18,9 ± 1,3)	.236 dia. (6,0Ø)
T15	3	1.40 (35,6)	.36 (9,1)	.600 ± .040 (15,24 ± 1,02)	–
T16	3	2.34 (59,4)	.36 (9,1)	.600 ± .062 (15,24 ± 1,57)	–
T17	3	2.00 (50,8)	.36 (9,1)	.600 ± .052 (15,24 ± 1,57)	–
T18	3	2.75 (69,9)	.36 (9,1)	.600 ± .093 (15,24 ± 2,36)	–
T20	3	1.06 (26,9)	.58 (14,7)	.600 ± .045 (15,24 ± 1,14)	–
T23	4	1.56 (39,6)	.58 (14,7)	.810 ± .065 (20,57 ± 1,65)	.19 dia. (4,8Ø)
T24	4	1.50 (38,1)	.58 (14,7)	.743 ± .090 (18,80 ± 2,29)	.236 dia. (6,0Ø)
T25	3	1.62 (41,1)	.58 (14,7)	.600 ± .080 (15,24 ± 2,03)	–
T26	3	2.56 (65,0)	.56 (14,7)	.600±.125 (15,24±3.18)	–
T27	3	2.22 (56,4)	.58 (14,7)	.600±.125 (15,24±3.18)	–
T28	3	2.97 (75,4)	.58 (14,7)	.600±.187 (15,24±4.75)	–

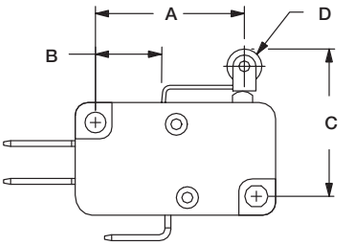

FIG. 1
Lever Roller

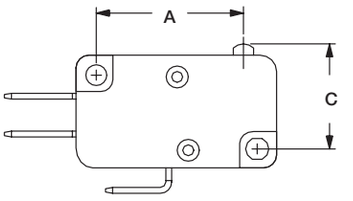

FIG. 2
Pin Roller

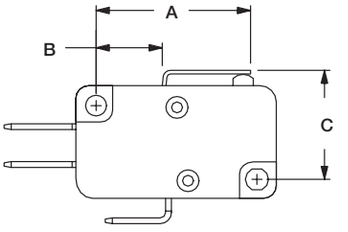

FIG. 3
Lever

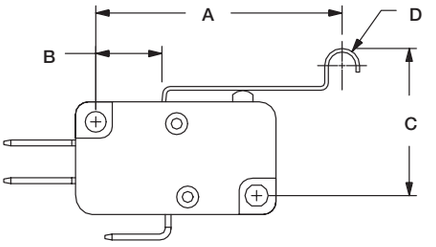

FIG. 4
Simulated Roller

HIGH FORCE, LOW MOTION PIVOT POSITION

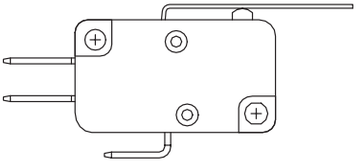

Available with actuators A10, A15, T10, T13, T14, T15, T16, T17 and T18.

LOW FORCE, HIGH MOTION PIVOT POSITION

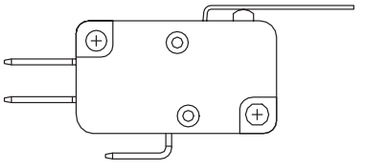

Available with actuators A20, A25, T20, T23, T24, T25, T26, T27 and T28.

NOTE: Lever actuator options are available in either of two pivot positions.
Levers located in the forward pivot position have lower forces and higher motions.
Levers located in the rear pivot position have higher forces and lower motions.

Third Angle Projection

Dimensions are shown: Inches (mm)
Specifications and dimensions subject to change

TM Series
Miniature Snap-acting Switches

ACTUATOR

SWITCH CHARACTERISTICS

OPTION CODE	MAXIMUM OPERATING FORCE (OZ./GRAMS)			MINIMUM RELEASE FORCE (OZ./GRAMS)			MINIMUM RETURN FORCE (OZ./GRAMS)			MAXIMUM DIFFERENTIAL TRAVEL	MAXIMUM PRETRAVEL	MINIMUM OVERTRAVEL
	CF (50)	CG (75)	CJ (150)	CF (50)	CG (75)	CJ (150)	CF (50)	CG (75)	CJ (150)	ALL FORCES	ALL FORCES	ALL FORCES
T10	2.12 60	3.17 90	6.35 180	.49 14	.99 28	1.69 48	.25 7	.53 15	1.06 30	.013 (0,33)	.080 (2,03)	.035 (0,89)
T13	1.06 30	1.59 45	2.82 80	.21 6	.35 10	.71 20	.11 3	.14 4	.35 10	.030 (0,76)	.160 (4,06)	.065 (1,65)
T13	1.06 30	1.76 50	3.17 90	.25 7	.35 10	.71 20	.11 3	.14 4	.35 10	.050 (1,27)	.140 (3,56)	.062 (1,57)
T15	1.06 30	1.59 45	2.28 80	.21 6	.32 9	.71 20	.11 3	.14 4	.35 10	.032 (0,81)	.160 (4,06)	.075 (1,90)
T16	.53 15	.71 20	1.41 40	.11 3	.18 5	.35 10	.05 1.5	.07 2	.18 5	.090 (2,29)	.312 (7,92)	.140 (3,56)
T17	.71 20	.88 25	1.76 50	.14 4	.21 6	.42 12	.07 2	.07 2	.21 6	.062 (1,57)	.220 (5,59)	.110 (2,79)
T18	N/A	.71 20	1.23 35	N/A	.14 4	.28 8	N/A	.04 1	.14 4	.078 (1,98)	.375 (9,52)	.160 (4,06)
T20	1.06 30	1.59 45	3.17 90	.21 6	.32 9	.71 20	.11 3	.18 5	.35 10	.030 (0,76)	.160 (4,06)	.065 (1,65)
T23	.53 15	1.06 30	1.59 45	.11 3	.18 5	.35 10	.04 1	.07 2	.18 5	.070 (1,78)	.312 (7,92)	.125 (3,18)
T24	.53 15	1.23 35	1.76 50	.11 3	.18 5	.35 10	.05 1.5	.07 2	.18 5	.080 (2,03)	.312 (7,92)	.110 (2,79)
T25	.71 20	1.06 30	1.41 40	.07 2	.14 4	.32 9	.04 1	.07 2	.16 4.5	.070 (1,78)	.330 (8,38)	.100 (2,54)
T26	N/A	.35 10	.71 20	N/A	.07 2	.18 5	N/A	.04 1	.07 2	.110 (2,79)	.500 (12,7)	.250 (6,35)
T27	N/A	.60 17	.88 25	N/A	.11 3	.21 6	N/A	.04 1	.11 3	.125 (3,18)	.500 (12,70)	.200 (5,08)
T28	N/A	.42 12	.63 18	N/A	.07 2	.14 4	N/A	.04 1	.07 2	.187 (4,75)	.750 (19,05)	.280 (7,11)
A10	2.12 60	3.17 90	6.35 180	.49 14	.99 28	1.69 48	.25 7	.53 15	1.06 30	.013 (0,33)	.070 (1,78)	.035 (0,89)
A15	1.06 30	1.59 45	2.82 80	.21 6	.35 10	.71 20	.11 3	.14 4	.35 10	.030 (0,76)	.160 (4,06)	.065 (1,65)
A20	1.06 30	1.76 50	3.17 90	.25 7	.35 10	.71 20	.11 3	.18 5	.35 10	.025 (0,64)	.140 (3,56)	.060 (1,52)
A25	.53 15	1.06 30	1.59 45	.11 3	.18 5	.35 10	.04 1	.07 2	.18 5	.070 (1,78)	.312 (7,92)	.125 (3,18)
P00	1.76 50	2.65 75	5.29 150	.71 20	.99 28	2.12 60	.35 10	.53 15	1.06 30	.013 (0,33)	.056 (1,42)	.035 (0,89)

NOTE: For basic switch operating forces, see page J-26.

Third Angle Projection

Dimensions are shown: Inch (mm)
Specifications and dimensions subject to change

TERMINATIONS

40 .187" QUICK CONNECT

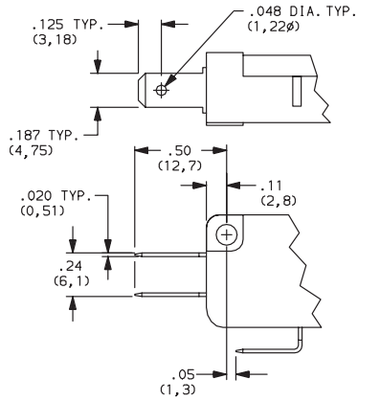

60 SCREW TERMINALS

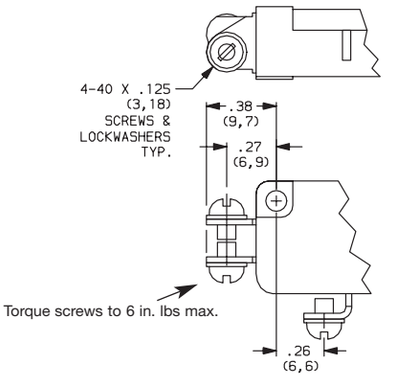

Not available with 'F5' rating option.

10 SOLDER

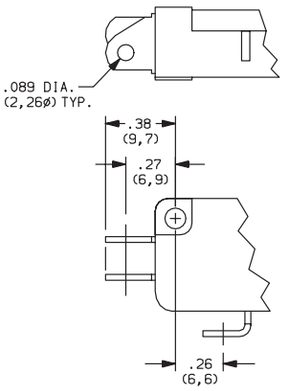

Not available with 'F5' rating option.

4A .250" QUICK CONNECT

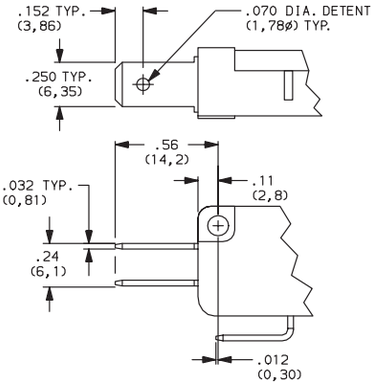

Not available with 'F5' rating option.

CIRCUITRY

C SPDT (Single Pole, Double Throw)

W SPST N.C. (Single Pole, Single Throw, Normally Closed)

Y SPST N.O. (Single Pole, Single Throw, Normally Open)

Third Angle Projection

Dimensions are shown: Inches (mm)
Specifications and dimensions subject to change

LC Series
Subminiature Precision Snap-acting Switches

Features/Benefits

- ***Compact design***
- ***Long life and high electrical capacity***
- ***Quick connect, wire lead or PC mounting***
- ***Wide variety of actuator styles***

Typical Applications

- ***Motorized equipment***
- ***Sump pump***
- ***Thermostatic controls***

UL61058-1

Specifications

CONTACT RATING: From low level* to 10.1 AMPS @ 250 V AC.

ELECTRICAL LIFE: 100,000 cycles

INSULATION RESISTANCE: 1,000 M Ω min.

DIELECTRIC STRENGTH: 1,000 Vrms min. @ sea level.

OPERATING TEMPERATURE: –17°F to 185°F (–25°C to 85°C).

OPERATING FORCE: From 142 to 170 grams at actuator button. Forces are less at free end of lever actuators; (see OPERATING FORCE and ACTUATOR option sections).

MOUNTING: 2-56 screws, torque 2.3 in/lbs max.

* Low Level=conditions where no arcing occurs during switching, i.e., 0.4 VA max. @ 20 V AC or DC max.

NOTE: Specifications and materials listed above are for switches with standard options. For information on specific and custom switches, consult Customer Service center.

Materials

SWITCH HOUSING: Thermoplastic polyester or high temperature thermoplastic (PTS) (UL 94V-0).

ACTUATOR BUTTON: Thermoplastic polyester (UL 94V-0).

SPRING: Copper alloy.

PIVOT: Copper alloy.

MOVABLE CONTACTS: Fine silver for ratings greater than 1 AMP @ 125 V AC. Fine silver with 24K gold plate for 1 AMP @ 125 V AC or less.

STATIONARY CONTACTS: Fine silver welded on copper alloy for ratings greater than 1 AMP @ 125 V AC. Gold alloy welded on copper alloy for ratings less than 1 AMP @ 125 V AC.

TERMINALS: Copper alloy.

TERMINAL SEAL: Epoxy.

Build-A-Switch

To order, simply select desired option from each category and place in the appropriate box. Available options are shown and described on pages J-33 through J-35. For additional options not shown in catalog, consult Customer Service Center.

L C — — —

SERIES

LC SUBMINIATURE PRECISION SNAP-ACTING SWITCHES
SP MOMENTARY

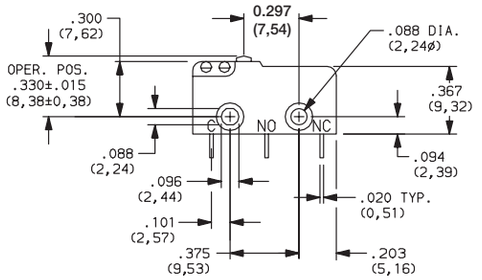

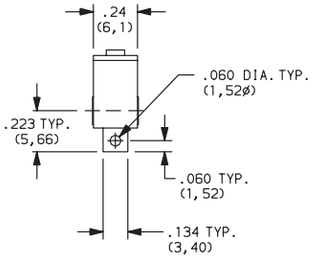

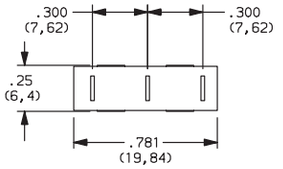

OPERATING FORCE

OPTION CODE	BASIC SWITCH OPERATING FORCES (OZ./GRAMS)
GG	5 142
GD	3.3 94
GH	6 170

NOTE: Operating force varies with actuator option, see ACTUATOR option section.

ELECTRICAL RATING

UL 61058-1

OPTION CODE	ELECTRICAL RATING	CONTACT MATERIAL: MOVABLE CONTACT	CONTACT MATERIAL: STATIONARY CONTACT	RoHS COMPLIANT*	RoHS COMPATIBLE*
X1	1A GP, 250 Vac, 50/60 Hz, 25E3, T85 1RA, 30 Vdc, 1E4, T85	Fine silver with 24K gold plate	Fine silver with 24K gold plate on copper base alloy	Yes	Yes
V6	5(2)A RM, 250 Vac, 50/60 Hz, 1E4, T85 5A GP, 250 Vac, 50/60 Hz, 1E4, T85 5RA, 30 Vdc, 1E4, T85 1/3 HP, 125/250 Vac, 50/60 Hz, 1E4, T85	Fine silver	Fine silver welded on copper base alloy	Yes	Yes
V7	10(2)A RM, 250 Vac, 50/60 Hz, 1E4, T85 10A GP, 250 Vac, 50/60 Hz, 1E4, T85 10RA, 30 Vdc, 1E4, T85 1/3 HP, 125/250 Vac, 50/60 Hz, 1E4, T85	Fine silver	Fine silver welded on copper base alloy	Yes	Yes

UL 1054

OPTION CODE	ELECTRICAL RATING	CONTACT MATERIAL: MOVABLE CONTACT	CONTACT MATERIAL: STATIONARY CONTACT	RoHS COMPLIANT*	RoHS COMPATIBLE*
F5	1A, 125 V AC, 30 VDC 100,000 cycles ("U" option)	Fine silver with 24K gold plate	Fine silver with 24K gold plate on copper base alloy	Yes	Yes
L9	5A, 1/3 HP @ 125 and 250 V AC 100,000 cycles ("U" option)	Fine silver	Fine silver welded on copper base alloy	Yes	Yes
M1	10.1A, 1/3 HP @ 125 and 250 V AC 100,000 cycles ("U" option)	Fine silver	Fine silver welded on copper base alloy	Yes	Yes

* Note: See Technical Data section of this catalog for RoHS compliant and compatible definition and specifications.

Consult Customer Service Center for availability and delivery of nonstandard ratings.
*Low Level = conditions where no arcing occurs during switching, i.e., 0.4 VA max. @ 20 V AC or DC max.

Third Angle Projection

Dimensions are shown: Inches (mm)
Specifications and dimensions subject to change

ACTUATOR

OPTION CODE	FIG.	DIM. A	DIM. B	DIM. C
P00	1	0.297 (7,6)	.330 ± .015 (8,38 ± 0,38)	–
A10	7	0.28 (7,1)	.570 ± .070 (14,48 ± 1,78)	.19 dia. (4,8Ø)
A25	2	0.61 (15,5)	.570 ± .175 (14,22 ± 4,45)	.19 dia. (4,8Ø)
T10	3	0.29 (7,4)	.340 ± .070 (8,64 ± 1,78)	–
T13	5	0.220 (5,3)	.455 ± .065 (11,56 ± 1,65)	–
T20	4	0.39 (9,9)	.340 ± .140 (8,64 ± 3,56)	–
T23	6	0.32 (8,1)	.455 ± .125 (11,56 ± 3,18)	–
T25	4	0.67 (17,0)	.340 ± .091 (8,64 ± 4,70)	–
A15	7	0.51 (13,0)	.560 ± .090 (14,22 ± 2,29)	.19 dia. (4,8Ø)
A20	2	0.38 (9,7)	.560 ± .135 (14,22 ± 2,29)	.19 dia. (4,8Ø)
T15	3	0.57 (14,51)	.340 ± .100 (8,64 ± 2,54)	–

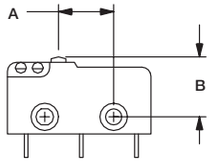

FIG. 1
Pin Plunger

HIGH FORCE

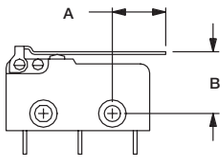

FIG. 3
Lever

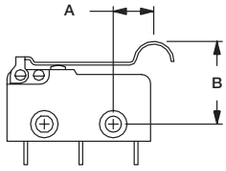

FIG. 5
Simulated Roller

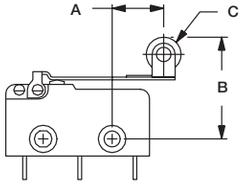

FIG. 2
Lever Roller

LOW FORCE

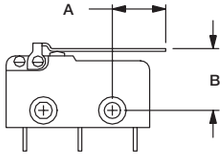

FIG. 4
Lever

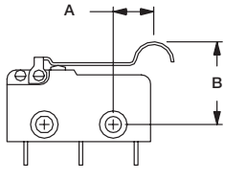

FIG. 6
Simulated Roller

BASIC FORCE

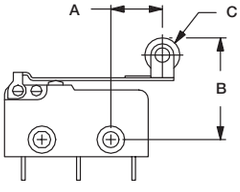

FIG. 7
Lever Roller

SWITCH CHARACTERISTICS

OPTION CODE	MAXIMUM OPERATING FORCE (OZ./GRAMS)			MINIMUM RELEASE FORCE (OZ./GRAMS)			MAXIMUM DIFFERENTIAL TRAVEL	MAXIMUM PRETRAVEL	MINIMUM OVERTRAVEL
	GG	GD	GH	GG	GD	GH	ALL FORCES	ALL FORCES	ALL FORCES
A10	1.69 48	1 28	2.0 57	.21 6	.11 3	.42 12	.034 (0,86)	.140 (3,56)	.029 (0,74)
A15	1.3 37	.68 19	1.6 44	.16 4.5	.07 2	.32 9	.044 (1,12)	.180 (4,57)	.037 (0,94)
A20	0.9 26	.52 15	1.1 31	.11 3	.05 15	.21 6	.067 (1,70)	.272 (6,91)	.053 (1,53)
A25	.70 20	.42 12	.85 24	.07 2	.04 1	.16 4.5	.086 (2,18)	.351 (8,92)	.068 (1,73)
P00	5 142	3.3 95	6 170	1 28	.05 14	2.0 57	.004 (0,10)	.030 (0,76)	.010 (0,25)
T10	1.7 48	1 28	2.1 60	.21 6	.10 3	.39 11	.035 (0,90)	.140 (3,56)	.029 (0,74)
T13	1.8 52	1.2 34	2.2 62	.21 6	.03 1	.42 12	.032 (0,81)	.130 (3,30)	.026 (0,66)
T20	0.9 26	.52 15	1.1 30	.10 3	.03 1	.21 6	.067 (1,70)	.276 (7,01)	.053 (1,35)
T23	1.0 28	.52 15	1.2 34	.10 3	.03 1	.21 6	.062 (1,57)	.252 (6,40)	.049 (1,24)
T25	0.7 19	.05 14	0.8 24	.07 2	.03 1	.14 4	.090 (2,29)	.372 (9,45)	.072 (1,83)
T15	1.2 35	1.3 39	1.5 42	0.14 4	.21 6	.28 81	.047 (1,19)	.190 (4,83)	.040 (1,02)

NOTE: For basic switch operating forces, see page J-32.

Third Angle Projection

Dimensions are shown: Inch (mm)
Specifications and dimensions subject to change

TERMINATIONS

E SOLDER

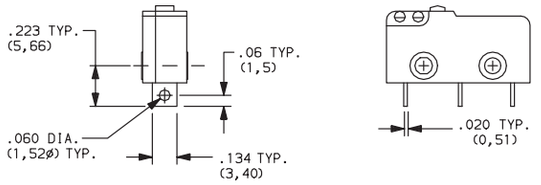

H .110" QUICK CONNECT

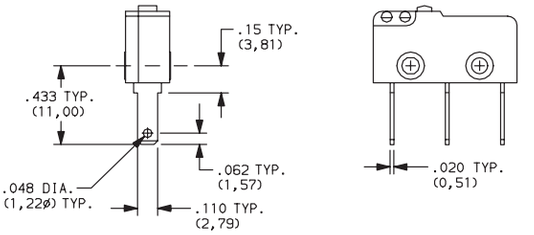

NOTE: Use Amp Quick Connect Part No. 640932-1.

J WIRE LEAD

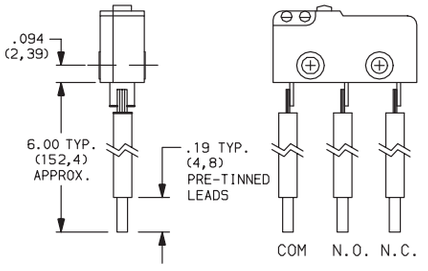

RATING	WIRE SIZE
1 AMP	22 AWG
5 AMPS	20 AWG
10.1 AMPS	18 AWG

TERMINAL	WIRE COLOR
COMMON	BLACK
NORMALLY OPEN	WHITE
NORMALLY CLOSED	RED

L LEFT FORMED PC THRU-HOLE

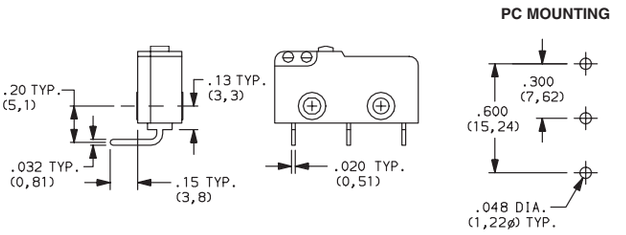

R RIGHT FORMED PC TRU-HOLE

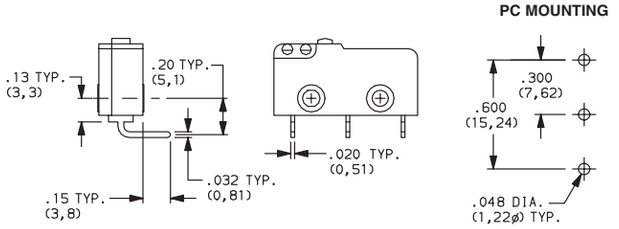

S PC THRU-HOLE

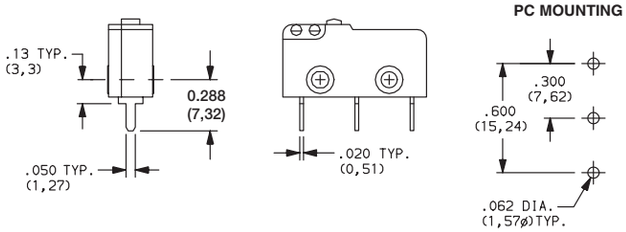

CIRCUITRY

C SPDT (Single Pole, Double Throw)

W SPST N.C. (Single Pole, Single Throw, Normally Closed)

Y SPST N.O. (Single Pole, Single Throw, Normally Open)

ELECTRICAL LIFE

NONE 6,000 OPERATIONS

U EXTENDED 100,000 OPERATIONS

SEAL

NONE NO SEAL

E EPOXY SEAL

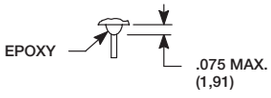

Third Angle Projection

Dimensions are shown: mm
Specifications and dimensions subject to change

LCA Series
Subminiature Snap-acting Switches

Features/Benefits

- ***Compact design***
- ***Long life and high electrical capacity***
- ***Quick connect, solder terminals, PC terminals***
- ***Wide variety of actuator styles***
- ***RoHS compatible***

Typical Applications

- ***Motorized equipment***
- ***Sump pump***
- ***Thermostatic controls***

UL61058-1

Specifications

CONTACT RATING: From low level to 10.1 AMPS @ 125/250 V AC
ELECTRICAL LIFE: see chart below
MECHANICAL LIFE: 300,000 cycles.
INSULATION RESISTANCE: 100 M ohm min.
DIELECTRIC STRENGTH: 1,500 Vrms min. @ sea level.
OPERATING TEMPERATURE: –40ºC to +125ºC
OPERATING FORCE: 150 grams at actuator button MAX.
Forces are less at free end of lever actuators; (see ACTUATOR'S option sections).
MOUNTING: 2-56 screws, torque 2.3 in/lbs max.

NOTE: Specifications and materials listed above are for switches with standard options.
For information on specific and custom switches, consult Customer Service center.

Materials

SWITCH HOUSING: Thermoplastic polyester
ACTUATOR BUTTON: Thermoplastic polyester.
SPRING: Copper alloy.
PIVOT: Copper alloy.
MOVABLE CONTACTS: Silver alloy
STATIONARY CONTACTS: Silver alloy
TERMINALS: Copper alloy.
ACTUATOR LEVER: Stainless steel.

Build-A-Switch

To order, simply select desired option from each category and place in the appropriate box. Available options are shown and described on pages J-36 thru J-39. For additional options not shown in catalog, consult Customer Service Center.

L C A — □ □ — 1 5 0 — □ □ □ — □ — □

Series
LCA SP, Mom.

Electrical Rating

Operating Force
150 150 grams

Actuator
P00 Pin plunger
T05 4.8 mm short lever
T06 6.8 mm lever
T09 8.8 mm lever
T12 12.9 mm lever
T16 15.2 mm lever
T18 18.1 mm lever
T21 20.1 mm lever
T23 23.4 mm lever
T43 43.5 mm lever
S06 6.0 mm simulated lever
S09 9.2 mm simulated lever
A05 5.0 mm lever roller

Terminations
S Solder
Q .110 Quick Connect
P PC Thru Hole
L Left Form PC
R Right Form PC

Circuitry
C SPDT
W SPST N.C.
Y SPST N.O.

Option Code	UL 1054	UL 61058-1	
01	0.1 A 125/250 V AC 1E4	0.1 A 125/250 V AC 1E4	0.1 A 125/250 V AC 1E4
06	6 A 125/250 V AC 1E4	6 A 125/250 V AC 1E4	6 (2)A 125/250 V AC 1E4
10	10.1 A 125/250 V AC 1E4	10.1 A 125/250 V AC 1E4	10.1 A 125/250 V AC 1E4
S5	NA	5 A 125/250 V AC 1E5	NA

Third Angle Projection

Dimensions are shown: mm
Specifications and dimensions subject to change

SERIES

LCA

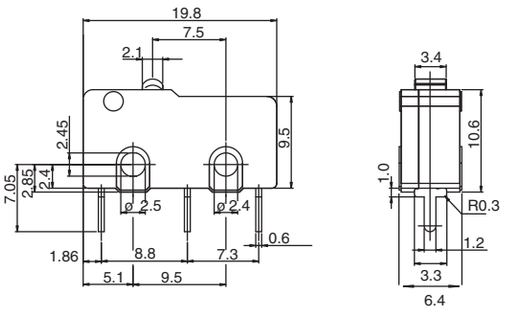

ELECTRICAL RATING

RoHS COMPLIANT *	RoHS COMPATIBLE *	OPTION CODE	ELECTRICAL RATING
YES	YES	01	0.1A, 125/250 VAC
YES	YES	06	6A, 125/250 VAC
YES	YES	10	10.1A, 125/250 VAC
YES	YES	S5	5A, 125/250 VAC

* Note: See Technical Data section of this catalog for RoHS compliant and compatible definition and specifications.

OPERATING FORCE

OPTION CODE	OPERATING FORCES (grams)
150	150 grams max.

Third Angle Projection

Dimensions are shown: mm
Specifications and dimensions subject to change

LCA Series
Subminiature Snap-acting Switches

ACTUATOR

A05 LEVER ROLLER

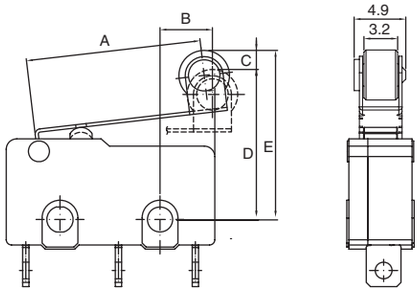

SXX SIMULATED ROLLER

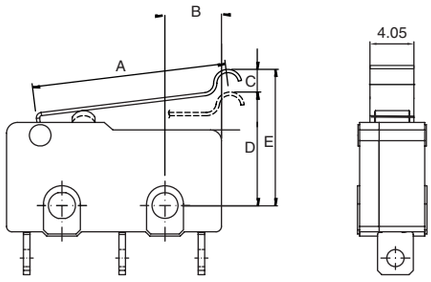

TXX LEVER

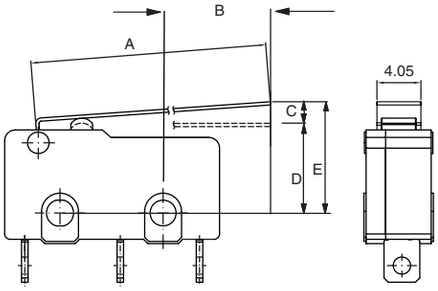

P00

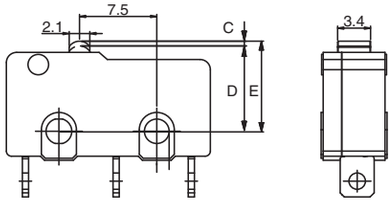

ACTUATOR OPTION CODE	A mm LENGTH OF LEVER	B r mm Lever length for front mtg. hole to OP	efC mm PRE TRAVEL (MAX)	D mm OPERATING POSITION	E mm FREE POSITION (MAX)	Diff. Motion mm max	Oper. Force max. grams	Release Force min. grams	Over Travel min.
P00	NA	NA	1.10	8.55 ± 0.3	9.35	0.20	150	25	0.4
T05	16.70	4.80	3.60	8.95 ± 0.8	11.75	0.80	50	6	0.6
T06	18.70	6.80	4.03	8.9 ± 0.9	12.09	0.90	45	5	0.67
T09	20.60	9.10	5.64	9.15 ± 1.35	13.45	1.83	33	2	0.75
T12	24.80	12.90	3.35	8.95 ± 1.5	13.10	1.19	34	2	0.89
T16	27.10	15.20	7.20	9.15 ± 1.7	15.15	1.30	40	1	0.70
T18	30.00	18.10	7.70	8.95 ± 1.9	14.65	1.50	32	1	1.2
T21	32.00	20.10	8.00	8.15 ± 1.85	15.55	1.60	35	1	1.0
T23	35.20	23.40	8.60	8.95 ± 2.0	15.55	1.80	25	1	1.5
T43	55.20	43.50	10.45	8.95 ± 3.0	19.25	2.90	15	1	1.0
S06	17.90	6.00	3.86	10.85 ± 0.9	17.81	0.86	47	5	0.64
S09	21.10	9.20	5.7	16.15 ± 1.5	20.35	1.00	42	2	1.0
A05	16.60	5.00	3.8	14.65 ± 0.8	17.65	0.80	50	6	0.6

Third Angle Projection

Dimensions are shown: mm
Specifications and dimensions subject to change

TERMINATIONS

S SOLDER

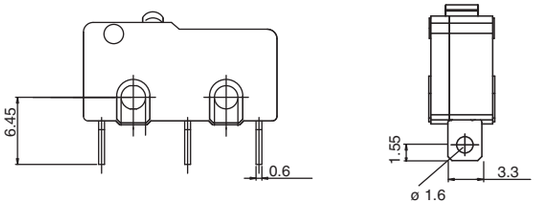

Q QUICK CONNECT

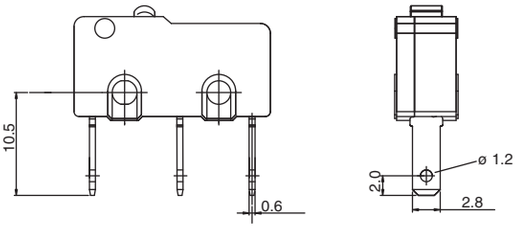

P PC THRU HOLE

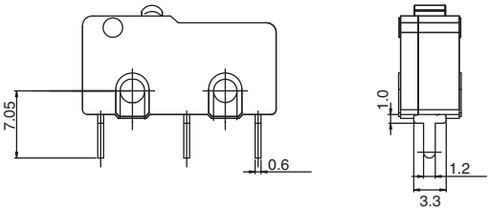

L LEFT FORM PC

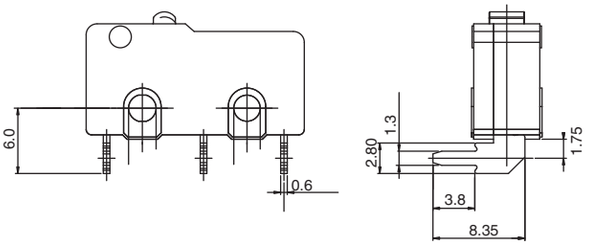

R RIGHT FORM PC

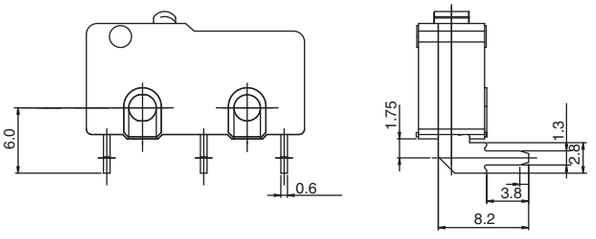

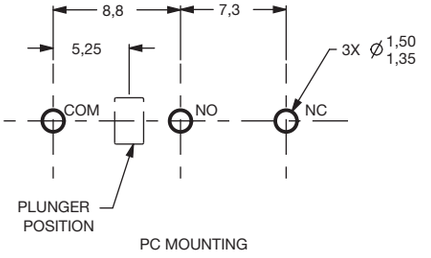

PC MOUNTING

CIRCUITRY

C SPDT (Single Pole, Double Throw)

W SPST N.C. (Single Pole, Single Throw, Normally Closed)

Y SPST N.O. (Single Pole, Single Throw, Normally Open)

Third Angle Projection

Dimensions are shown: mm
Specifications and dimensions subject to change

LCS Series
Subminiature Sealed Snap-acting Switches

UL61058-1

Features/Benefits

- ***Compact design***
- ***Long life and high electrical capacity***
- ***Quick connect, solder terminals, PC terminals, wire leads***
- ***Wide variety of actuator styles***
- ***RoHS compatible, RoHS compliant***
- ***IP67***

Typical Applications

- ***Motorized equipment***
- ***Sump pump***
- ***Thermostatic controls***
- ***Computers***
- ***Air conditioners***

Specifications

CONTACT RATING: from low level to 5 Amp
ELECTRICAL LIFE: 10,000 cycles
INSULATION RESISTANCE: 100 M ohm min.
DIELECTRIC STRENGTH: 1,000 VAC
OPERATING TEMPERATURE:
-40ºC to +120ºC (without wire)
-40ºC to +85ºC (with UL1007 wire)
-40ºC to +105ºC (with UL1015 wire)
-40ºC to +105ºC (with UL1430 wire)
-40ºC to +80ºC (with UL1061 wire)
-40ºC to +120ºC (with UL1330 wire)
OPERATING FORCE: (see ACTUATOR'S option sections).
MOUNTING: 2-56 screws, torque 2.3 in/lbs max.

NOTE: Specifications and materials listed above are for switches with standard options. For information on specific and custom switches, consult Customer Service center.

Materials

SWITCH HOUSING: Thermoplastic polyester or high temperature thermoplastic (PTS) (UL 94V-0).
ACTUATOR BUTTON: Thermoplastic polyester.
SPRING: Copper alloy.
PIVOT: Copper alloy.
MOVABLE CONTACTS: Option "01" Gold plating over silver alloy Option "05" Silver alloy
STATIONARY CONTACTS: Option "01" Gold plating over silver alloy Option "05" Silver alloy
TERMINALS: Copper alloy.
ACTUATOR LEVEL: Stainless steel.

Build-A-Switch

To order, simply select desired option from each category and place in the appropriate box. Available options are shown and described on pages J-40 thru J-43. For additional options not shown in catalog, consult Customer Service Center.

L C S

Series
LCS

Electrical Rating

Option Code	UL 61058-1	
01	0.1 A 125/250 V AC	NA
05	5 A 125/250 V AC	6 A 250 V AC

Operating Force
2 203 grams

Actuator
P00 Pin plunger
T00 11.9 mm short lever
T05 17.4 mm short lever
T07 19.4 mm short lever
T13 25.5 mm lever
T19 33.3 mm lever
T28 40.7 mm lever
T43 55.9 mm lever
S26 18.6 mm simulated lever
A05 17.2 mm lever roller

Terminations
S Solder
Q 0.110 Quick Connect
P PC Thru Hole
W Wire leads potted
Z Wire leads non-potted

Wire Side (when required)
A Wire out the bottom
B Wire out the right side
C Wire out the left side
D None

Wire Type AWG
20 20 AWG
22 22 AWG
24 24 AWG
26 26 AWG

Wire UL # (when required)
A UL1007
B UL1015
C UL1430
D UL1061

Circuitry
C SPDT
W SPST N.C.
Y SPST N.O.

Dimensions are shown: mm
Specifications and dimensions subject to change

SERIES

LCS

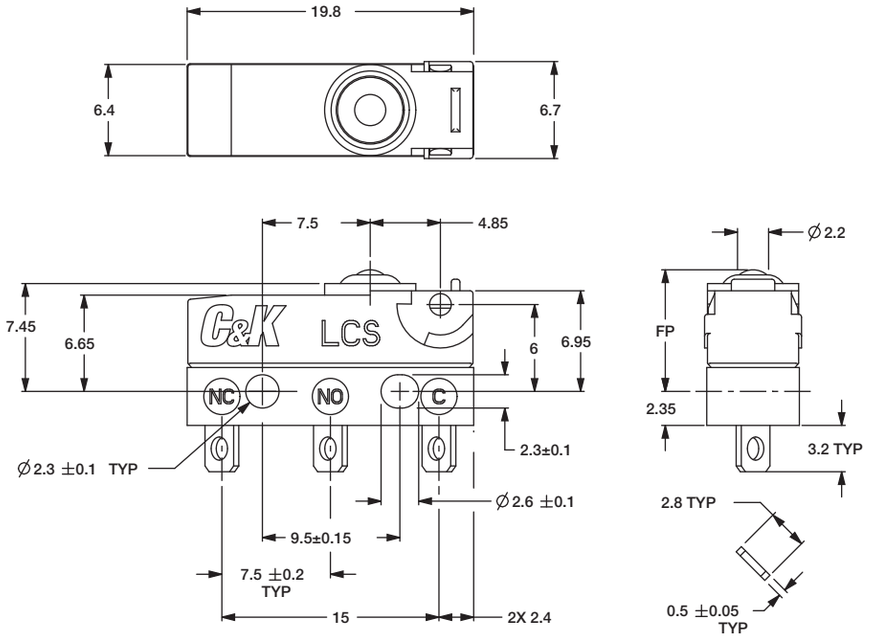

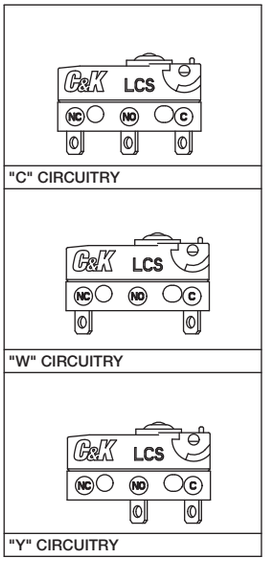

ELECTRICAL RATING

RoHS COMPLIANT *	RoHS COMPATIBLE *	OPTION CODE	ELECTRICAL RATING
YES	YES	05	5 AMP, 125/250 V AC
YES	YES	01	0.1 AMP, 125/250 V AC

OPERATING FORCE

OPTION CODE	OPERATING FORCES (grams)
2	203 g. max.

Third Angle Projection

Dimensions are shown: mm
Specifications and dimensions subject to change

LCS Series
Subminiature Sealed Snap-acting Switches

ACTUATOR

P00

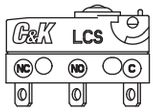

T19

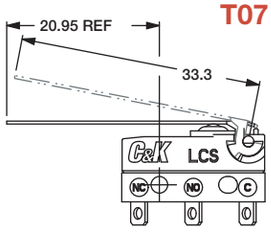

T07

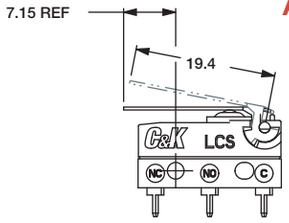

A05

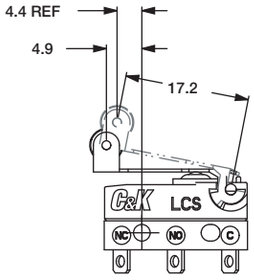

T00

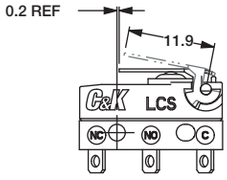

T28

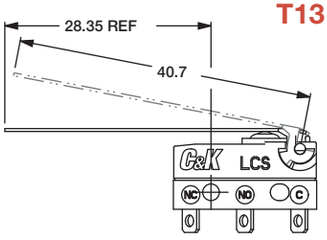

T13

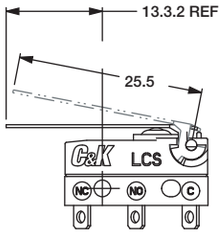

S26

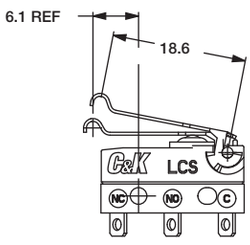

T05

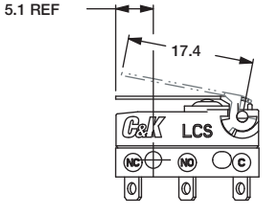

T43

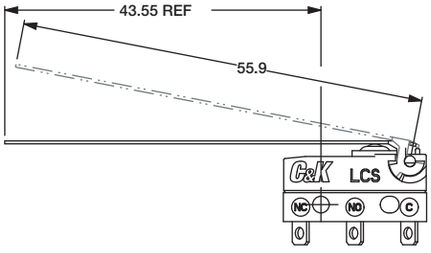

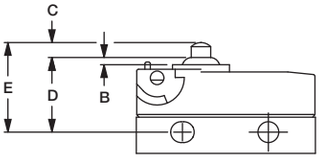

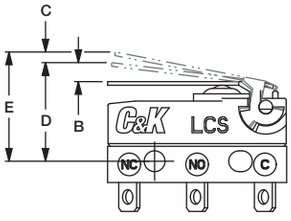

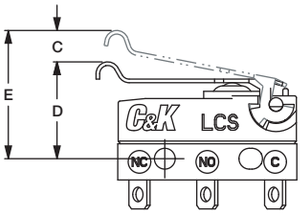

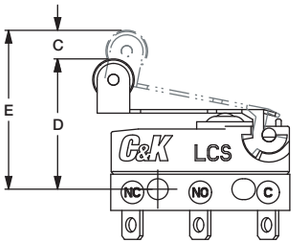

ACTUATOR OPTION CODE	A	B	C	D	E	DIFFERENTIAL MOTION (MAX)	OPERATING FORCE (MAX)	RELEASE FORCE (MIN)
	LENGTH OF LEVER	OVER TRAVEL (MIN)	PRE TRAVEL (MAX)	OPERATING POSITION	FREE POSITION (MAX)	203	203	203
P00	N/A	0.6	1.2	8.4 ±.3	9.9	0.2	203	50
T00	11.9	0.6	3.2	8.8 ±.9	11.1	0.5	98	21
T05	17.40	0.9	4.3	8.8 ±1.1	12	0.6	82	16
T07	19.40	1	4.8	8.8 ±1.2	12.4	0.7	66	13
T13	25.5	1.6	6.3	8.8 ±1.6	13.5	0.9	54	11
T19	33.3	1.95	8	8.8 ±2.0	15	1.75	40	5
T28	40.7	2.1	10.1	8.8 ±2.6	16.3	2.3	39	8
T43	55.9	2.9	13.8	8.8 ±3.5	19.1	3.6	33	7
S26	18.6	1	4.6	10.7 ±1.2	14.1	0.65	68	14
A05	17.20	0.9	4.3	14.5 ±1.1	17.7	0.6	72	15

Third Angle Projection

Dimensions are shown: mm
Specifications and dimensions subject to change

TERMINATIONS

S SOLDER

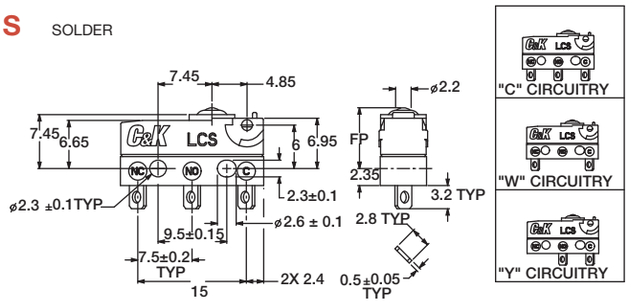

Q QUICK CONNECT 2.8mm / 0.110"

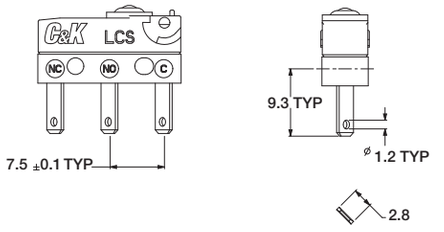

P PC THRU HOLE

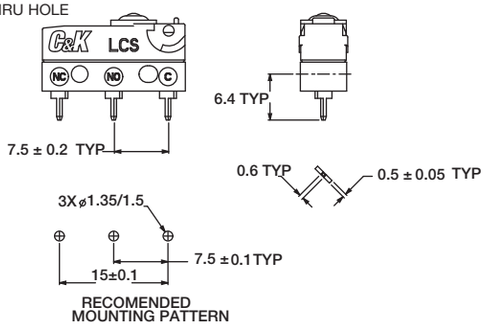

Z or W "A" WIRE ORIENTATION

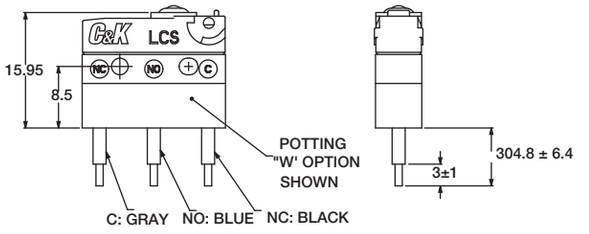

Z or W "B" WIRE ORIENTATION
"Y" OR "W" CIRCUITRY

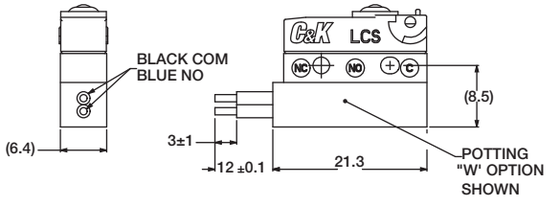

Z or W "C" WIRE ORIENTATION
"Y" OR "W" CIRCUITRY

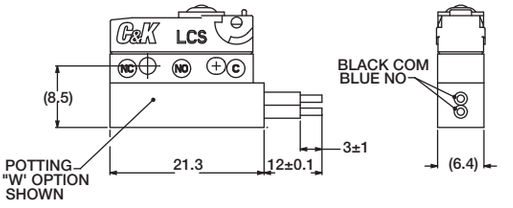

Z or W "B" WIRE ORIENTATION
"C" CIRCUITRY

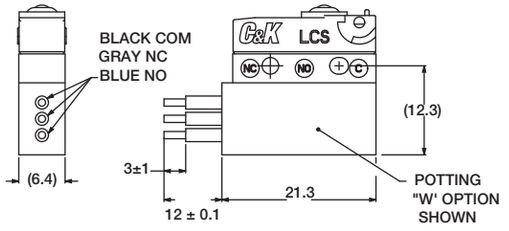

Z or W "C" WIRE ORIENTATION
"C" CIRCUITRY

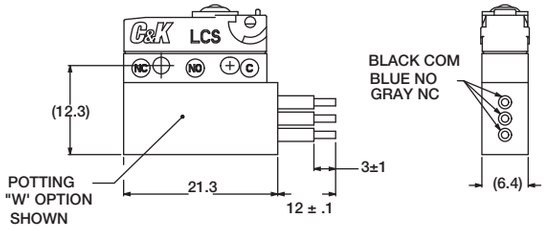

CIRCUITRY

C SPDT (Single Pole, Double Throw)

W SPST N.C. (Single Pole, Single Throw, Normally Closed)

Y SPST N.O. (Single Pole, Single Throw, Normally Open)

Third Angle Projection

Dimensions are shown: mm
Specifications and dimensions subject to change

MM Series
Subminiature Precision Snap-acting Switches

Features/Benefits

- ***Low level and power switching***
- ***Long electrical and mechanical life***
- ***Increased overtravel***
- ***Reliable snap-acting mechanism***

Typical Applications

- ***Limited space constraints***
- ***Communication devices***

Specifications

CONTACT RATING: From low level* to 7 AMPS @ 250 V AC.
ELECTRICAL LIFE: 100,000 cycles at full rated load.
INSULATION RESISTANCE: 1,000 ohm min.
DIELECTRIC STRENGTH: 1,000 V RMS min. @ sea level.
OPERATING TEMPERATURE: –67 F to 275 F (–55 C to 135 C).
OPERATING FORCE: 5 oz. (142 grams) max. at actuator button.
MOUNTING: 2-56 screws, torque 2 in/lbs max.

*Low Level=conditions where no arcing occurs during switching, i.e., 0.4 VA max. @ 20 V AC or DC max.

NOTE: Specifications and materials listed above are for switches with standard options. For information on specific and custom switches, consult Customer Service center.

Materials

SWITCH HOUSING: Heat resistant phenolic (UL 94V-0).
ACTUATOR BUTTON: Heat resistant phenolic (UL 94V-0).
SPRING: Beryllium copper CDA alloy C17200.
PIVOT: Brass CDA alloy 260.
MOVABLE CONTACTS: Fine silver for ratings greater than 1 AMP @ 125 V AC. 24K gold for 1 AMP @ 125 V AC or less.
STATIONARY CONTACTS: Fine silver inlay on copper CDA alloy C10200 for ratings greater than 1 AMP @ 125 V AC. 24K gold on copper CDA alloy C10200 for 1 AMP @ 125 V AC or less.
TERMINALS: Copper CDA alloy C18700.

Build-A-Switch

To order, simply select desired option from each category and place in the appropriate box. Available options are shown and described on pages J-44 through J-49. For additional options not shown in catalog, consult Customer Service Center.

M M — G G — ☐☐ — ☐☐ — ☐

Series
MM SP, Mom.

Operating Force
GG 5 oz./142 grams

Electrical Rating
D1 7A 125, 250 VAC
7A 28 VDC resistance
4A 28 VDC inductive
2.5A 28 VDC (lamp)
F5 1 A, 125 V AC, 30 V DC

Actuator
P0 Pin plunger
D0 Plunger, high overtravel
L0 Leaf
L2 Leaf, high force, low motion
W0 Leaf roller
W2 Leaf roller, high force, low motion

Terminations
C Single turret solder
L Left formed PC thru-hole
R Right formed PC thru-hole
T PC thru-hole, .035”

SWITCH WITH STANDARD OPTIONS

MMGGD1P0C

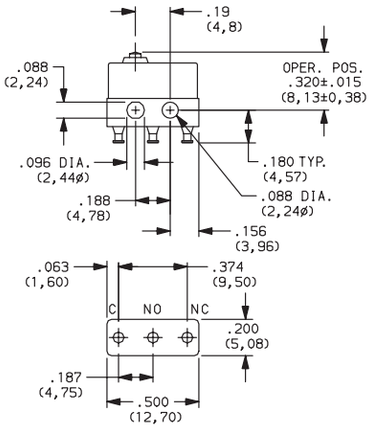

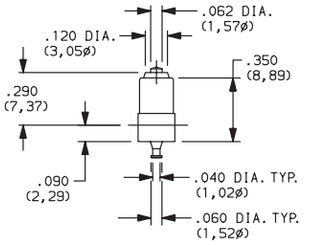

PART NUMBER	BASIC OPERATING FORCE (OZ./GRAMS)	ELECTRICAL RATING
MMGGD1P0C	5 142	7 AMPS @ 250 V AC.

SERIES

MM SPDT MOMENTARY

OPERATING FORCE

OPTION CODE	BASIC SWITCH OPERATING FORCE
GG	5 oz. (142 grams) maximum for basic switch with pin plunger actuator ('P0' actuator option).

NOTE: Operating force varies with actuator option, see ACTUATOR option section.

ELECTRICAL RATING

OPTION CODE	RoHS COMPLIANT*	RoHS COMPATIBLE*	CONTACT MATERIAL		ELECTRICAL RATING
			MOVABLE CONTACT	STATIONARY CONTACT	
D1	Yes	Yes	Fine silver.	Fine silver inlay on copper alloy.	7A 125, 250 VAC; 7A 28 VDC resistance 4A 28 VDC inductive; 2.5A 28 VDC (lamp)
F5	Yes	Yes	24K Gold.	24K Gold on copper alloy.	From low level* to 1 AMP @ 125 V AC, 30 V DC.

Note: See Technical Data section of this catalog for RoHS compliant and compatible definition and specifications.

All models c UL us with all options.

Consult Customer Service Center for availability and delivery of nonstandard ratings.

* Low Level=conditions where no arcing occurs during switching, i.e., 0.4 VA max. @ 20 V AC or DC max.

ACTUATOR

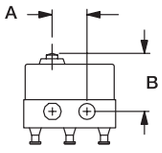

FIG. 1
Pin Plunger

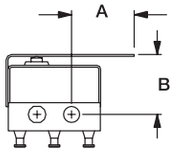

FIG. 2
Leaf

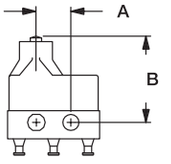

FIG. 3
Plunger

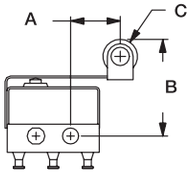

FIG. 4
Leaf Roller

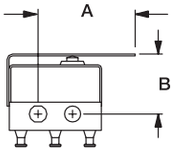

FIG. 5
Leaf

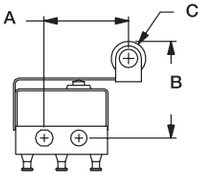

FIG. 6
Leaf Roller

OPTION CODE	FIG.	DIM. A	DIM. B	DIM. C
P0	1	.19 (4,8)	.320 ± .015 (8,13 ± 0,38)	—
D0	3	.19 (4,8)	.475 ± .031 (12,07 ± 0,79)	—
L0	2	.34 (8,6)	.330 ± .015 (8,38 ± 0,38)	—
L2	5	.53 (13,5)	.330 ± .015 (8,38 ± 0,38)	—
W0	4	.27 (6,9)	.532 ± .025 (13,51 ± 0,64)	.188 dia. (4,78ø)
W2	6	.46 (11,7)	.532 ± .025 (13,51 ± 0,64)	.188 dia. (4,78ø)

Third Angle Projection

Dimensions are shown: Inches (mm)
Specifications and dimensions subject to change

MM Series
Subminiature Precision Snap-acting Switches

ACTUATOR

SWITCH CHARACTERISTICS

OPTION CODE	MAXIMUM OPERATING FORCE (OZ./GRAMS)	MINIMUM RELEASE FORCE (OZ./GRAMS)	MAXIMUM DIFFERENTIAL TRAVEL	MAXIMUM PRETRAVEL	MINIMUM OVERTRAVEL
D0	5 142	.7 20	.004 (0,10)	.030 (0,76)	.040 (1,02)
L0	4 115	.7 20	.025 (0,64)	.090 (2,29)	.045 (1,14)
L2	6 170	.7 20	.012 (0,30)	.075 (1,90)	.015 (0,38)
P0	5 142	1 28	.002 (0,05)	.020 (0,51)	.004 (0,10)
W0	4 115	.7 20	.025 (0,64)	.090 (2,29)	.045 (1,14)
W2	6 170	.7 20	.012 (0,30)	.075 (1,90)	.015 (0,38)

NOTE: For basic switch operating forces, see page J-44

TERMINATIONS

C SINGLE TURRET SOLDER

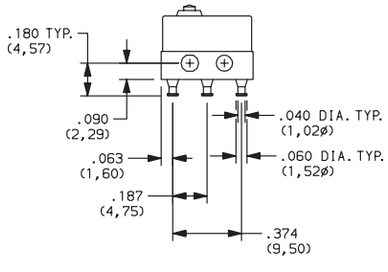

L LEFT FORMED PC THRU-HOLE

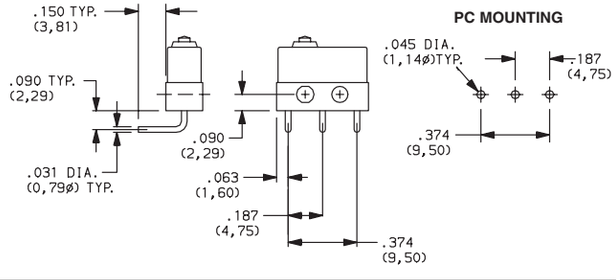

T PC THRU-HOLE, .035 "

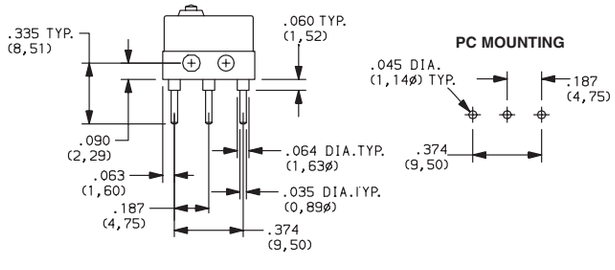

R RIGHT FORMED PC THRU-HOLE

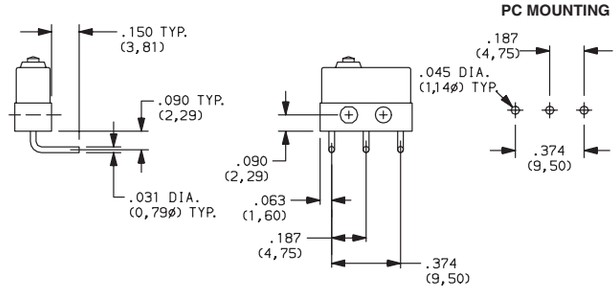

Third Angle Projection

Dimensions are shown: Inch (mm)
Specifications and dimensions subject to change

ZM Series
Subminiature Snap-acting Switches

Features/Benefits

- ***Reliable snap-acting mechanism***
- ***Long electrical and mechanical life***
- ***Compact size—Ideal when space is limited***
- ***Various PCB terminals and actuators***
- ***RoHS compliant / compatible***

Typical Applications

- ***PCB detection switch***
- ***Communication devices***
- ***Testing equipment***
- ***Security/Alarm systems***
- ***Consumer electronics***

UL61058-1

Specifications

CONTACT RATING: F7: 3A @ 125 VAC
M9: 0.2A @ 60 VDC.
ELECTRICAL LIFE: 10,000 Cycles. @ 3A
INSULATION RESISTANCE: 100 M ohm min.
DIELECTRIC STRENGTH: 1000 Vrms.
OPERATING TEMPERATURE: –30°C to 85°C.
OPERATING FORCE: CJ: 150 grams, CH: 90 grams.

* Low Level=conditions where no arcing occurs during switching, i.e., 0.4 VA max. @ 20 V AC or DC max.

Materials

COVER: Nylon 6/6
ACTUATOR BUTTON: Nylon 6/6
CASE: Nylon 6/6
SPRING: SUS
MOVABLE BLADE: BeCu
MOVABLE CONTACT: Silver alloy (M9 option gold plated)
FIXED CONTACTS: Silver alloy (M9 option gold plated)
FIXED TERMINALS: Brass - Ag plated.
ACTUATOR (Leaf / Roller options): SUS

NOTE: Specifications and materials listed above are for switches with standard options. For information on specific and custom switches, consult Customer Service Center.

Build-A-Switch

To order, simply select desired option from each category and place in the appropriate box. Available options are shown and described on pages J-48 and J-49. For additional options not shown in catalog, consult Customer Service Center.

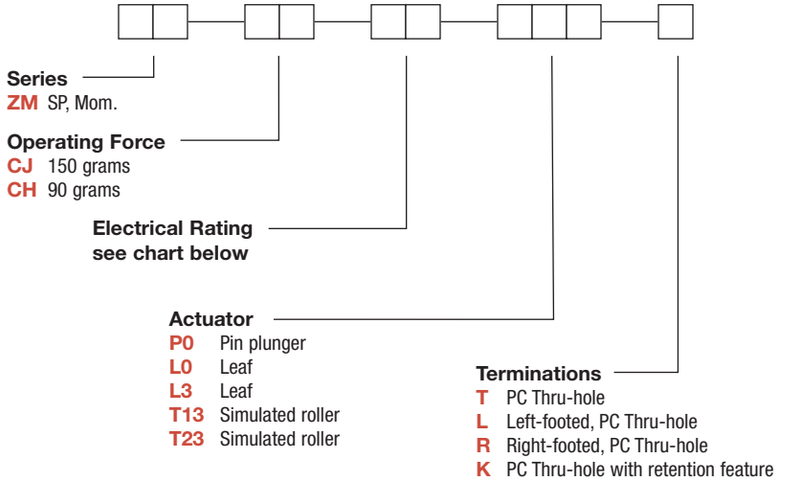

Option Code	UL 1054	UL 61058-1	
F7	3 A 125 V AC	3 A 125 V AC 3 A 30 V DC	3 A 125 V AC
M9	0.1 A 48 V DC 0.2 A 60 V DC 0.1 A 125 V AC	0.1 A 48 V DC 0.2 A 60 V DC 0.1 A 125 V AC	0.1 A 48 V DC 0.2 A 60 V DC 0.1 A 125 V AC

ZM Series
Subminiature Snap-acting Switches

SERIES Z M

ZM SUBMINIATURE SNAP-ACTING SWITCHES – SP MOMENTARY

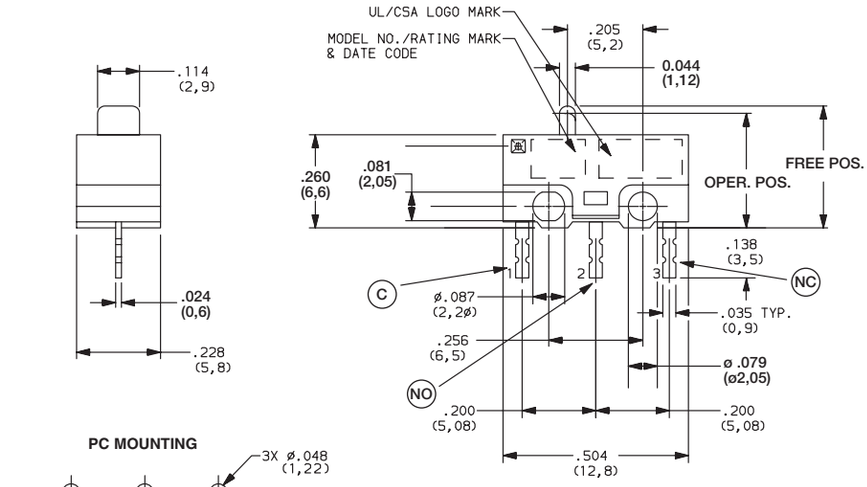

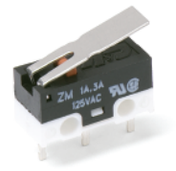

ZMCJF7L0T
SPDT

OPERATING FORCE

OPTION CODE	BASIC SWITCH OPERATING FORCE (OZ./GRAMS)
CJ	5.29 150
CH	3.15 90

ELECTRICAL RATING

OPTION CODE	RoHS COMPLIANT*	RoHS COMPATIBLE*	CONTACT MATERIAL		ELECTRICAL RATING
			MOVABLE CONTACT	STATIONARY CONTACT	
F7	Yes	Yes	Silver alloy		see chart
M9	Yes	Yes	Gold plating or silver alloy		see chart

* Note: See Technical Data section of this catalog for RoHS compliant and compatible definition and specifications.

All models c UL us with all options.

Consult Customer Service center for availability and delivery of nonstandard ratings.

Option Code	c UL us 1054	c UL us 61058-1	
F7	3 A 125 V AC	3 A 125 V AC 3 A 30 V DC	3 A 125 V AC
M9	0.1 A 48 V DC 0.2 A 60 V DC 0.1 A 125 V AC	0.1 A 48 V DC 0.2 A 60 V DC 0.1 A 125 V AC	0.1 A 48 V DC 0.2 A 60 V DC 0.1 A 125 V AC

Third Angle Projection

Dimensions are shown: Inch (mm)
Specifications and dimensions subject to change

ACTUATOR

P0 PIN PLUNGER

L0 LEAF, 50 GRAMS (CJ ONLY)
L3 LEAF, 30 GRAMS (CH ONLY)

T13 SIMULATED ROLLER, 40 GRAMS (CJ ONLY)
T23 SIMULATED ROLLER, 25 GRAMS (CH ONLY)

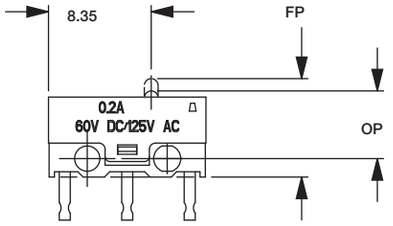

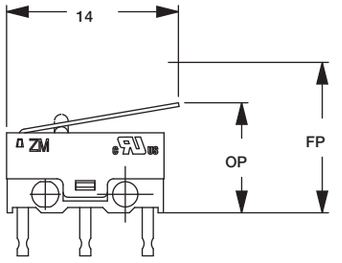

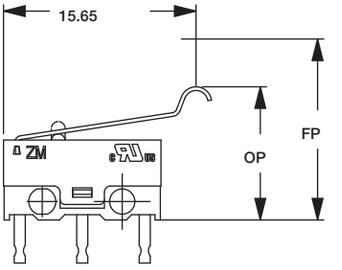

ACTUATOR OPTION CODE	A (mm)	B Ref (mm)	C (mm)	D (mm)	E (mm)	DIFF. MOTION mm MAX	OPER. FORCE grams MAX		RELEASED FORCE Grams MAX	OVER TRAVEL MIN
	LENGTH OF LEVER	LEVER LENGTH MTG. HOLE TO OP	PRE-TRAVEL MAX	OPERATING POSITION	FREE POSITION MAX		CJ	CH		
P0 PIN PLUNGER	NA	NA	1.3	7.0 ±0.3	8.0	0.3	150	90	15-20	0.2
L0 LEAF	13.0	4.03	3.4	8.4 ±0.8	11.0	1.3	50	-	8	0.6
L3 LEAF	13.0	4.03	3.4	8.4 ±0.8	11.0	1.3	-	30	5	0.6
T13 SIMULATED ROLLER	15.0	5.36	3.8	10.5 ±0.8	13.0	1.5	40	-	7	0.6
T23 SIMULATED ROLLER	15.0	5.36	3.8	10.5 ±0.8	13.0	1.5	-	25	4	0.6

TERMINATIONS

T (STD.) PC THRU-HOLE

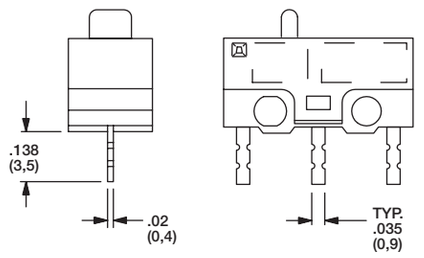

K PC THRU-HOLE WITH RETENTION FEATURE

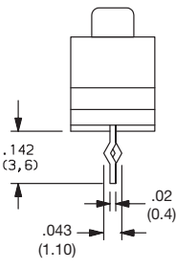

L LEFT FOOTED, PC THRU-HOLE

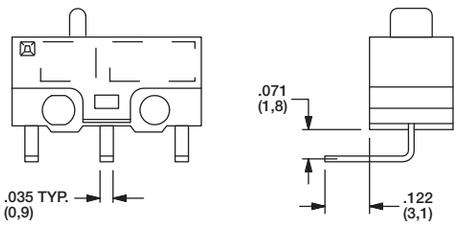

R RIGHT FOOTED, PC THRU-HOLE

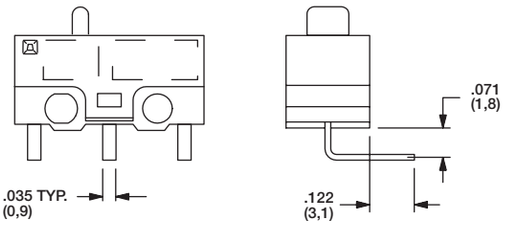

Third Angle Projection

Dimensions are shown: Inches (mm)
Specifications and dimensions subject to change

ZMA Series
Subminiature Snap-acting Switches

Features/Benefits

- ***Reliable snap-acting mechanism***
- ***Long electrical and mechanical life***
- ***Compact size—Ideal when space is limited***
- ***Various PCB terminals and actuators***
- ***RoHS compatible & compliant***

Typical Applications

- ***PCB detection switch***
- ***Communication devices***
- ***Testing equipment***
- ***Security/Alarm systems***
- ***Consumer electronics***

UL61058-1

Specifications

CONTACT RATING: 3A @ 125 V AC 24 V DC
1 A @125 / 250 V AC 24 V DC
0.1A @ 125 V AC 60 V DC
ELECTRICAL LIFE: 300,000 cycles @ 0.1A / 10,000 cycles @ 3A.
MECHANICAL LIFE: 1,000,000 cycles.
INSULATION RESISTANCE: 100 M ohm min.
DIELECTRIC STRENGTH: 500 Vrms.
OPERATING TEMPERATURE: –40ºC to 85ºC
OPERATING FORCE: 80 or 150 grams.

* Low Level=conditions where no arcing occurs during switching, i.e., 0.4 VA max. @ 20 V AC or DC max.

Materials

CASE/COVER: PBT
ACTUATOR: Button nylon 6/6
MOVABLE CONTACTS: Silver alloy or gold plated
STATIONARY CONTACTS: Silver alloy or gold plated
TERMINALS: Brass, silver plated.

NOTE: Specifications and materials listed above are for switches with standard options. For information on specific and custom switches, consult Customer Service Center.

Build-A-Switch

To order, simply select desired option from each category and place in the appropriate box. Available options are shown and described on pages J-51 and J-53. For additional options not shown in catalog, consult Customer Service Center.

Z M A — — — — — — — — — — — — C

Series
ZMA SP, Mom.

Electrical Rating
See charts below

Operating Force
150 5.29 oz. / 150 grams
080 2.82 oz. / 80 grams

Actuator
P00 Pin plunger
S03 Simulated roller 5.8mm
L30 Lever 20.5mm
L11 Lever 7.2mm
L08 Lever 3.95mm
A03 Roller 1.3mm
L04 Lever 3.9mm
S06 Simulated roller 2.03mm
S07 Simulated roller 0.75mm

Terminations
P PC Thru-hole
L Left-footed, PC Thru-hole
R Right-footed, PC Thru-hole
E Solder
K PC Thru-hole with rentention feature

C SPDT

Silver Contacts

Option Code	UL 1054	UL 61058-1		
00A	0.1A 60 V DC 0.1A 125 V AC	0.1A 60 V DC 0.1A 125 V AC	0.1A 125 V AC	
03A	3 A 125 V AC	3 A 125 V AC 3 A 24 V DC	3A 125 V AC	
01A		1 A 24 V DC 1 A 125 / 250 V AC		1 A 24 V DC 1 A 125 / 250 V AC

Gold Plated Contacts

Option Code	UL 1054	UL 61058-1		
G00	0.1A 60 V DC 0.1A 125 V AC	0.1A 60 V DC 0.1A 125 V AC	0.1A 125 V AC	
G03	3 A 125 V AC	3 A 125 V AC 3 A 24 V DC	3A 125 V AC	
G01		1 A 24 V DC 1 A 125 / 250 V AC		1 A 24 V DC 1 A 125 / 250 V AC

Dimensions are shown: Inch (mm)
Specifications and dimensions subject to change

SERIES Z M

ZMA SUBMINIATURE SNAP-ACTING SWITCHES – SP MOMENTARY

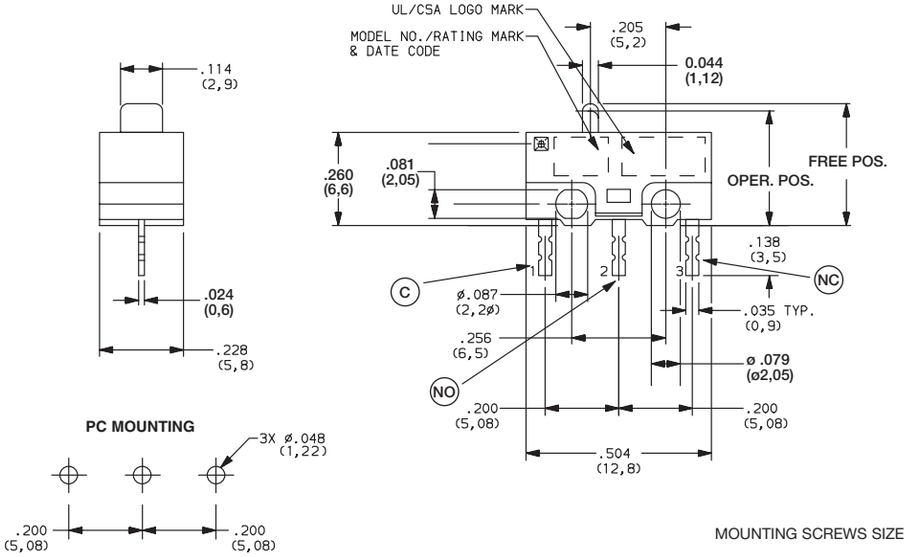

ZMA03A150L04PC
SPDT

MOUNTING SCREWS SIZE 1-64

ELECTRICAL RATING

Silver Contacts

Option Code	UL 1054	UL 61058-1		
00A	0.1A 60 V DC 0.1A 125 V AC	0.1A 60 V DC 0.1A 125 V AC	0.1A 125 V AC	
03A	3 A 125 V AC	3 A 125 V AC 3 A 24 V DC	3A 125 V AC	
01A		1 A 24 V DC 1 A 125 / 250 V AC		1 A 24 V DC 1 A 125 / 250 V AC

Gold Plated Contacts

Option Code	UL 1054	UL 61058-1		
G00	0.1A 60 V DC 0.1A 125 V AC	0.1A 60 V DC 0.1A 125 V AC	0.1A 125 V AC	
G03	3 A 125 V AC	3 A 125 V AC 3 A 24 V DC	3A 125 V AC	
G01		1 A 24 V DC 1 A 125 / 250 V AC		1 A 24 V DC 1 A 125 / 250 V AC

* Note: See Technical Data in section N of this catalog for RoHS compliant and compatible definition and specifications.

All models with all options.

Consult Customer Service center for availability and delivery of nonstandard ratings.

OPERATING FORCE

OPTION CODE	BASIC SWITCH OPERATING FORCE (OZ./GRAMS)
150	5.29 150
080	2.82 80

Third Angle Projection

Dimensions are shown: Inches (mm)
Specifications and dimensions subject to change

ACTUATOR

P00 PIN PLUNGER

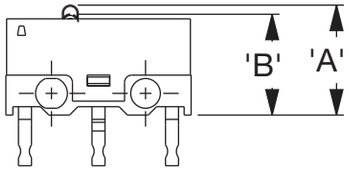

L08 LEVER 3.95MM

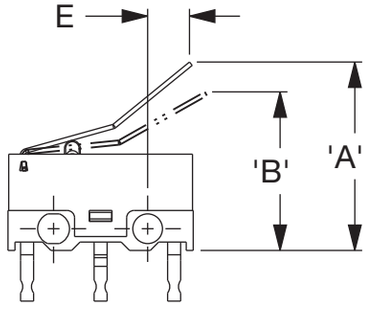

S03 SIMULATED ROLLER 5.8MM

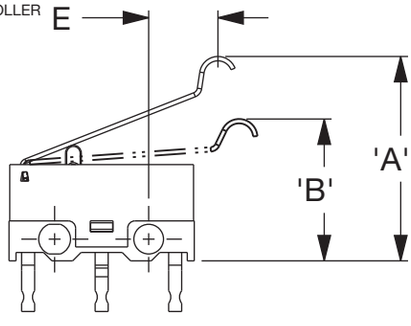

A03 ROLLER 1.3MM

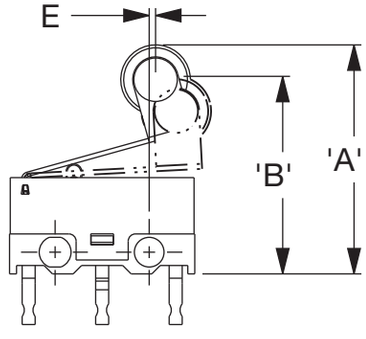

L30 LEVER 20.5MM

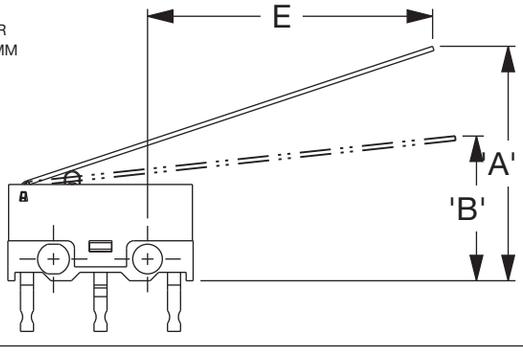

L04 LEVER 3.49MM

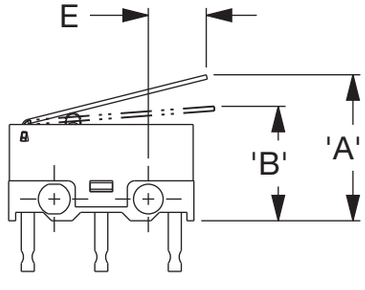

L11 LEVER 7.2MM

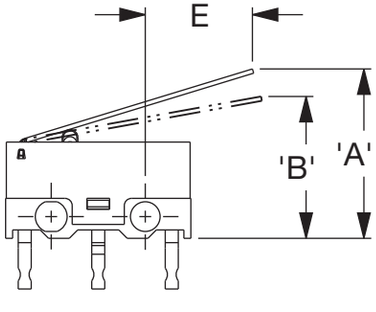

S06 SIMULATED ROLLER 2.03MM

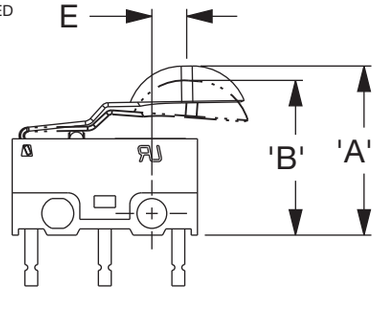

S07 SIMULATED ROLLER 0.75MM

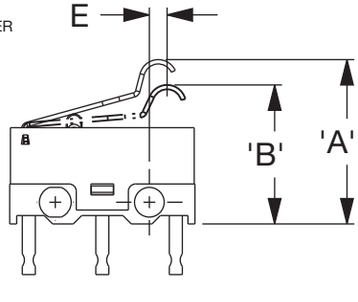

Third Angle Projection

Dimensions are shown: Inch (mm)
Specifications and dimensions subject to change

SWITCH CHARACTERISTICS

CODE	OPER. FORCE MAX. (GRAMS)		REL. FORCE MIN. (GRAMS)		'A' FP MAX. (MM)	'B' OP MAX. (MM)	'C' PT MAX. (MM)	'D' OT MIN. (MM)	'E' MIN. (MM)
P00	80	150	21	35	7.35	6.9 ±0.3	0.62	0.2	
S03	25	43	5	7	14.2	9.8 ±0.9	3.5	0.7	5.41
L30 (80gf)	13	21	2	3	16.8	9.5 ±1.9	6.9	0.55	20.15
L30 (150 gf)	13	21	2	3	16.8	9.75 ±1.9	6.9	0.55	20.15
L11	25	39	4	6	11.7	8.68 ±1	4.4	0.6	7.33
L08	27	48	3	8	13.5	10.75 ±0.8	3.5	0.3	3.82
A03	34	65	6	10	16.55	13.65 ±1	3.9	0.5	0.56
L04	30	50	5	8	10.1	7.9 ±0.7	3.0	0.5	3.49
S06	33	49	5	11	12.43	10.7 ±0.8	1.43	1.25	1.97
S07	40	65	2	5	13.0	9.7 ± 1	4.3	0.5	0.49

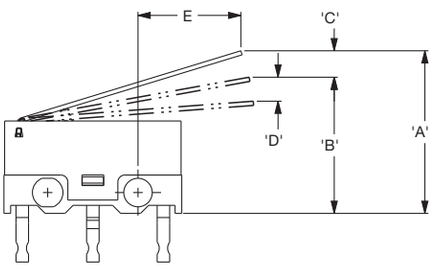

TERMINATIONS

P PC THRU-HOLE

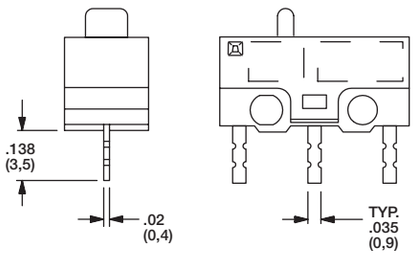

L LEFT FOOTED, PC THRU-HOLE

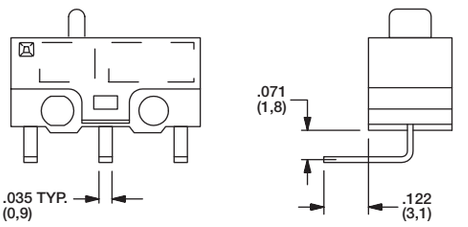

R RIGHT FOOTED, PC THRU-HOLE

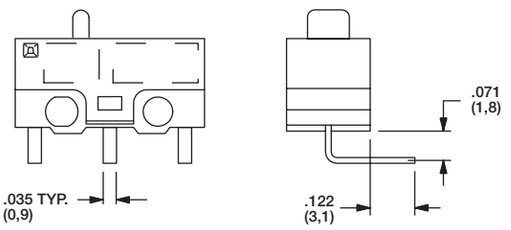

E SOLDER

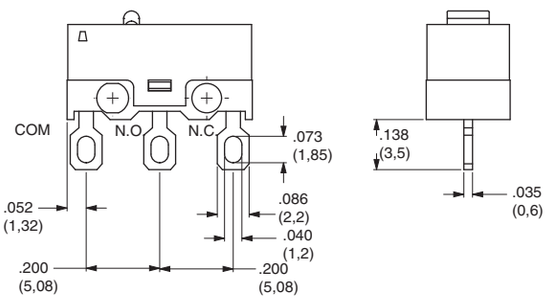

K PC THRU-HOLE WITH RETENTION FEATURE

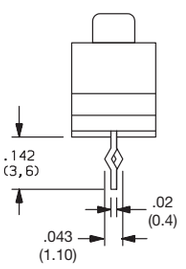

Third Angle Projection

Dimensions are shown: Inches (mm)
Specifications and dimensions subject to change

ZMB Series
Subminiature Snap-acting Switches

Features/Benefits

- *Compact design*
- *Various operating forces*
- *Different lever options*
- *PCB or solder terminal options*
- *Detect interlock and movement*

Typical Applications

- *Consumer electronics*
- *Communications*
- *Industrial meters*
- *Security systems*
- *Office equipment*

Specifications

CONTACT ARRANGEMENT: SPDT
CONTACT RATING: 0.1 A @ 30 V DC
INITIAL CONTACT RESISTANCE: 50 mΩ max.
INSULATION RESISTANCE: 100 M Ω min. @ 500 VDC
DIELECTRIC STRENGTH: 1000 VAC (50-60 Hz)
MECHANICAL LIFE: 500,000 cycles
ELECTRICAL LIFE: 50,000 cycles
PRE-TRAVEL: 0.5 mm max.
OVER-TRAVEL: 0.5 mm min.
OPERATING TEMPERATURE: -20°C to + 70°C

Materials

COVER / HOUSING: PBT (black)
KNOB: PBT (red)
CONTACT: Copper alloy, silver plated
TERMINALS: Copper alloy, silver plated
LEVER: Stainless steel

NOTE: Specifications and materials listed above are for switches with standard options. For information on specific and custom switches, consult Customer Service Center.

Build-A-Switch

To order, simply select desired option from each category and place in the appropriate box. Available options are shown and described on pages J-55 and J-56. For additional options not shown in catalog, consult Customer Service Center.

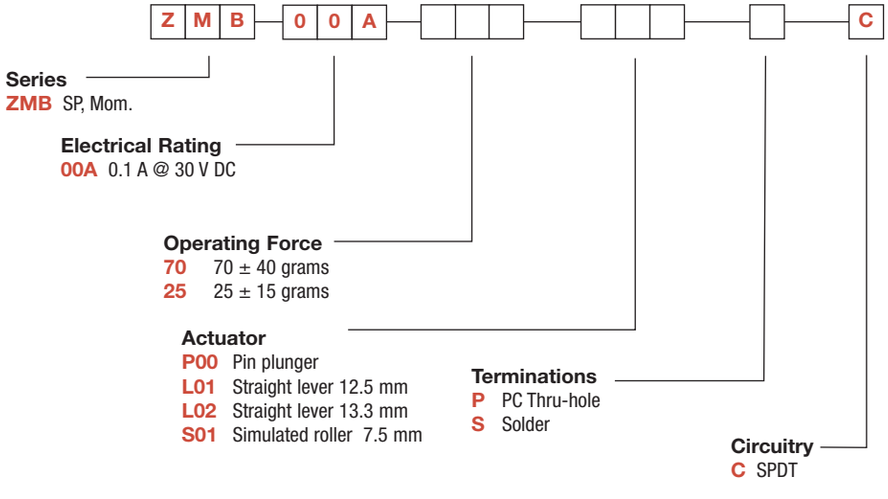

ZMB00A70P00PC

PIN PLUNGER, PC THRU-HOLE

OPERATING FORCE: 70 ± 40 gf
OPERATING POSITION (OP): 5.5 ± 0.30 mm
FREE POSITION (FP): N/A

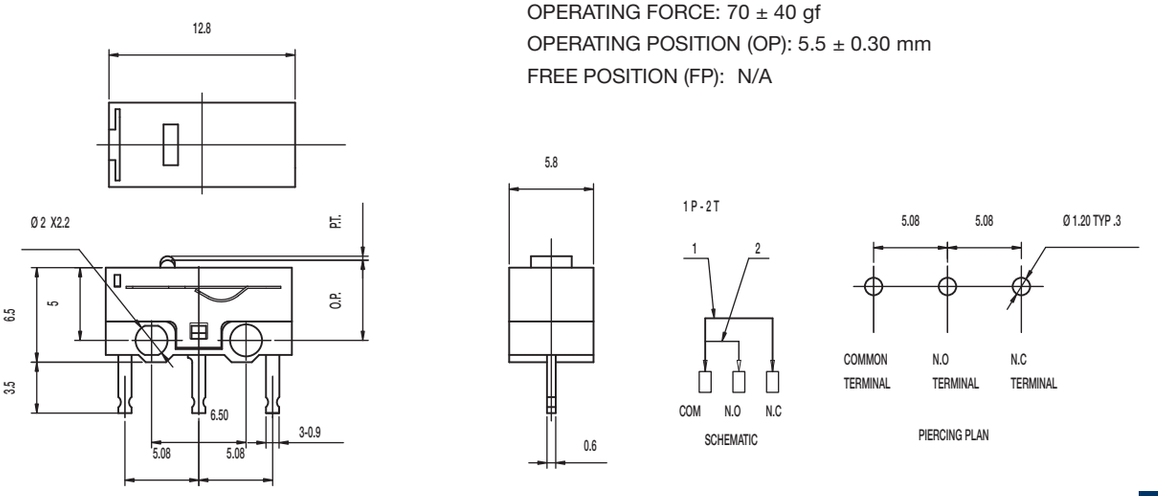

ZMB00A25L01PC

STRAIGHT LEVER 12.5 MM, PC THRU-HOLE

OPERATING FORCE: 25 ± 15 gf
OPERATING POSITION (OP): 7.2 ± 0.8 mm
FREE POSITION (FP): 10 mm max.

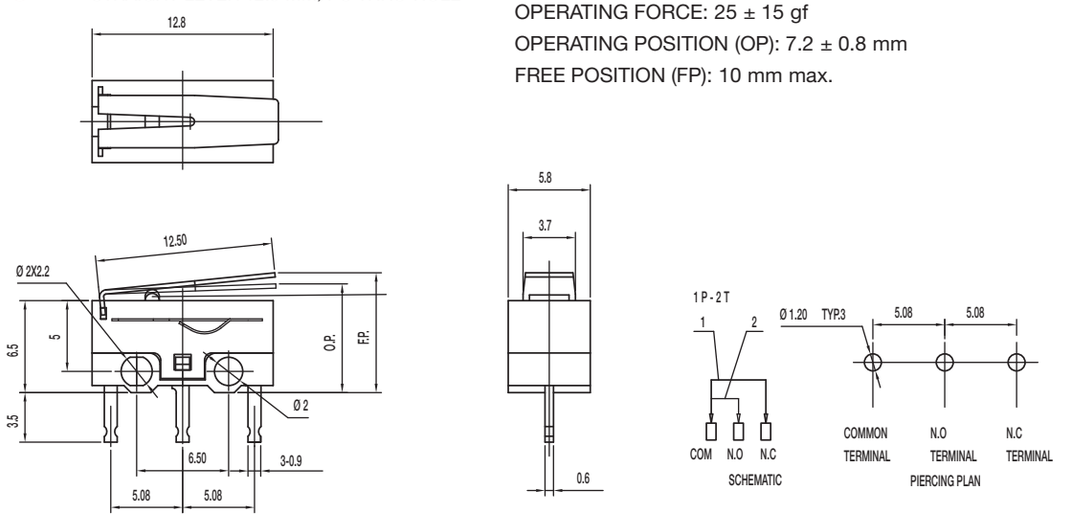

ZMB00A25L02PC

STRAIGHT LEVER 13.3 MM, PC THRU-HOLE

OPERATING FORCE: 25 ± 15 gf
OPERATING POSITION (OP): 6.0 ± 0.8 mm
FREE POSITION (FP): 8.5 mm max.

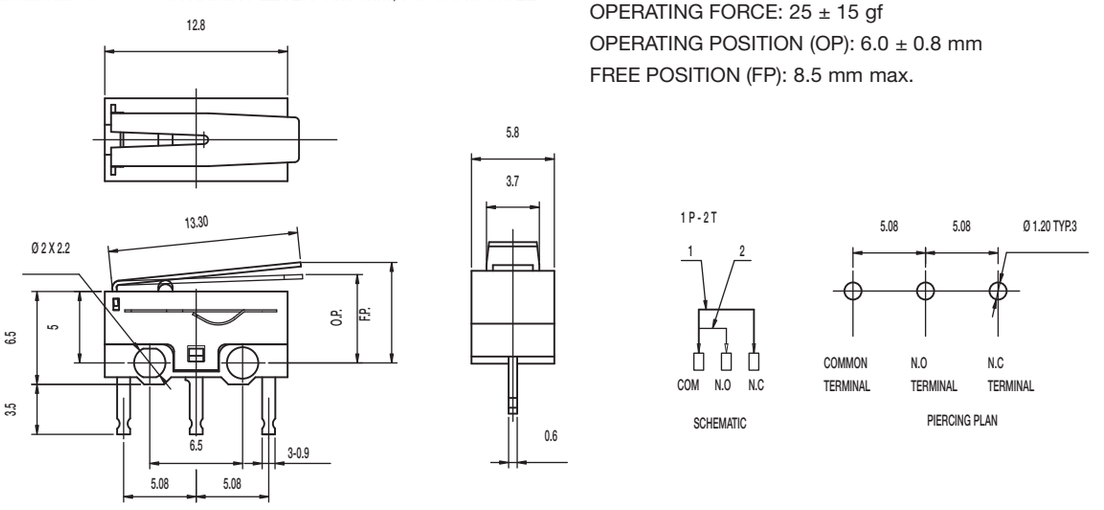

ZMB00A70P00SC

PIN PLUNGER, SOLDER

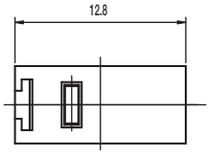

OPERATING FORCE: 70 ± 40 gf
OPERATING POSITION (OP): 7.0 ± 0.30 mm
FREE POSITION (FP): N/A

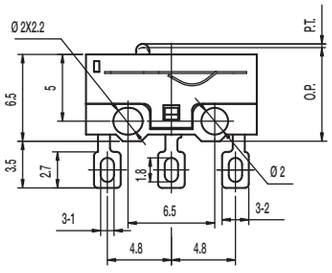

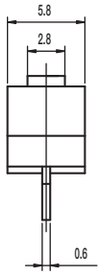

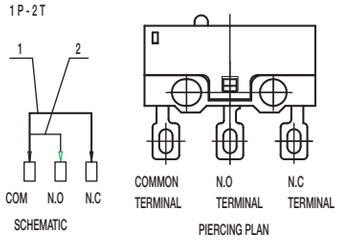

ZMB00A25L02SC

STRAIGHT LEVER 13.3 MM, SOLDER

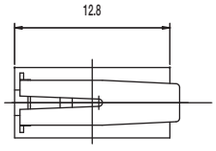

OPERATING FORCE: 25 ± 15 gf
OPERATING POSITION (OP): 7.5 ± 0.8 mm
FREE POSITION (FP): 10 mm max.

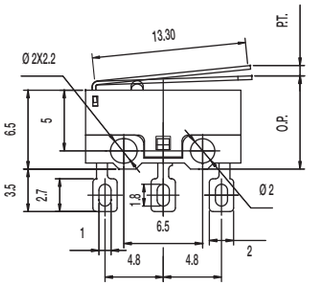

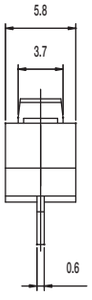

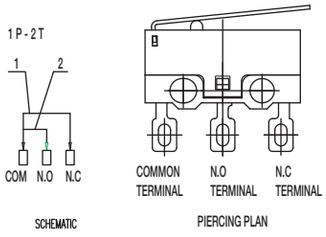

ZMB00A25S01SC

SIMULATED ROLLER 7.5 MM, SOLDER

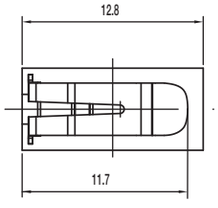

OPERATING FORCE: 25 ± 15 gf
OPERATING POSITION (OP): 8.5 ± 0.8 mm
FREE POSITION (FP): 9.5 mm max.

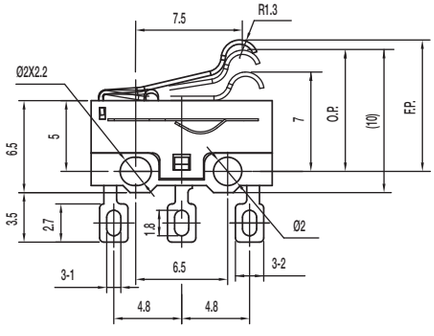

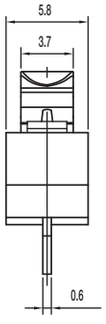

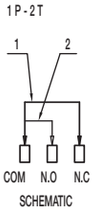

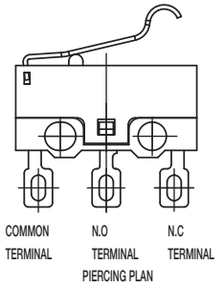

ZMS Series
Subminiature Snap-acting Switches (IP65)

Features/Benefits

- ***Reliable snap-acting mechanism***
- ***Long electrical and mechanical life***
- ***Compact size—Ideal when space is limited***
- ***Various PCB terminals and actuators***
- ***RoHS compatible***
- ***IP67 with potted wires only***

Typical Applications

- ***PCB detection switch***
- ***Communication devices***
- ***Testing equipment***
- ***Security/Alarm systems***
- ***Consumer electronics***

UL61058-1
UL1054

Specifications

CONTACT RATING: 3A@ 125 V AC/ 3A@ 12 V DC, 0.01A @ 12 V DC
ELECTRICAL LIFE: 100,000 cycles @ 0.01A 12V DC
100,000 cycles @ 3A 12 V DC
6,000 cycles @ 3A 125 V AC
MECHANICAL LIFE: 500,000 cycles
INSULATION RESISTANCE: 100 M ohm min.
DIELECTRIC STRENGTH: 500 Vrms.
OPERATING TEMPERATURE: -40˚C + 85˚C.
OPERATING FORCE: 130 grams.

* Low Level=conditions where no arcing occurs during switching, i.e., 0.4 VA max. @ 20 V AC or DC max.

Materials

CASE: Nylon
COVER/ACTUATOR: PBT
MOVABLE CONTACTS: 3 Amp silver alloy, 0.01A gold plating over silver alloy
STATIONARY CONTACTS: 3 Amp silver alloy, 0.01 A gold plating over silver alloy
TERMINALS: Brass, silver plated
LEVER: Stainless steel

NOTE: Specifications and materials listed above are for switches with standard options. For information on specific and custom switches, consult Customer Service Center.

Build-A-Switch

To order, simply select desired option from each category and place in the appropriate box. Available options are shown and described on pages J-58 through J-60. For additional options not shown in catalog, consult Customer Service Center.

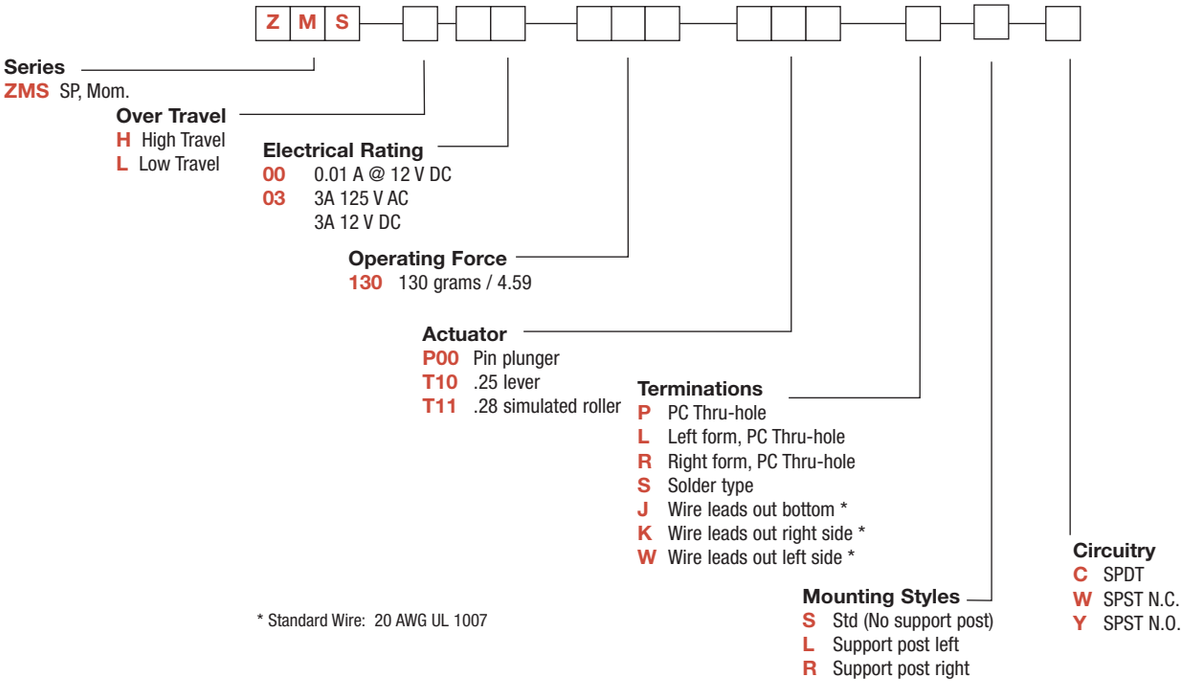

J
Snap-acting

ZMS Series
Subminiature Snap-acting Switches (IP65)

SERIES Z M S

ZMSH HIGH OVER TRAVEL
Switch option shown: ZMSH00P00SSC

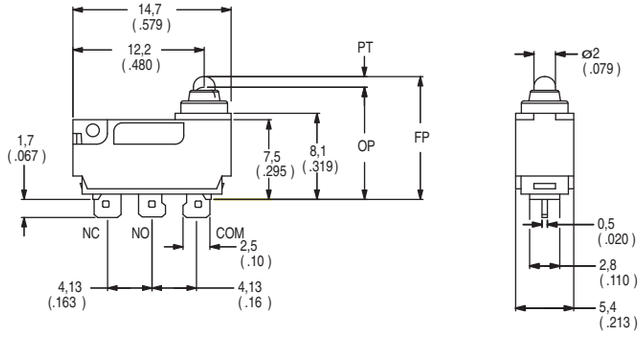

ZMSL LOW OVER TRAVEL
Switch option shown: ZMSL00P00PSC

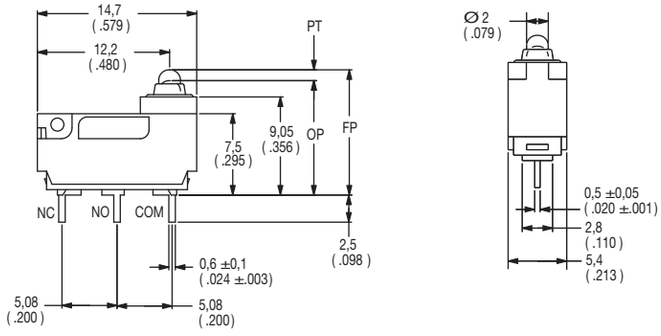

ELECTRICAL RATING

OPTION CODE	CONTACT MATERIAL MOVABLE CONTACT / STATIONARY CONTACT	UL61058-1 UL1054 ELECTRICAL RATING	ENEC ELECTRICAL RATING
00	Gold plating over silver alloy	0.01 AMP @ 12 V DC 0.1 AMP @ 12 V DC	10m AMP @ 12 V DC 5E5
03	Silver alloy	3 AMPS @ 125 V AC 3 AMPS @ 12 V DC	3 AMPS @ 12 V DC 1E5

Consult Customer Service center for availability and delivery of nonstandard ratings.

OPERATING FORCE

OPTION CODE	BASIC SWITCH OPERATING FORCE (OZ./GRAMS)
130	130 4.59

Third Angle Projection

Dimensions are shown: Inch (mm)
Specifications and dimensions subject to change

ACTUATOR

P00 PIN PLUNGER (IP65)

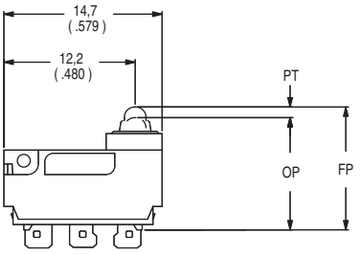

c US approved

T10 .25 LEVER (IP65)

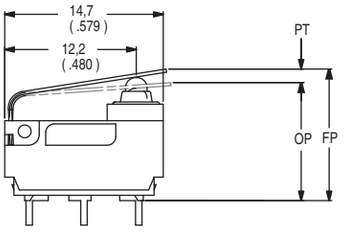

T11 LEVER (IP65)

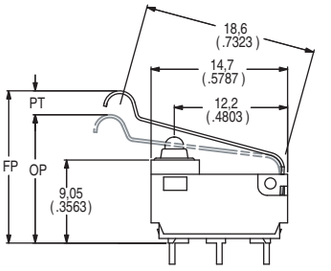

SWITCH CHARACTERISTICS

Actuator code	Maximum Operate Force (grams/oz.)	Minimum Release Force (grams/oz.)	Free Position Max	Maximum Pre-travel	Operate Position	Maximum Differential	Low Overtravel min. (L)	High Overtravel min. (H)
P00	130 4.59	13 0.45	.472 (12)	0.032 (0,8)	.415 ± .012 (10.55 ± .3)	.012 (0.3)	0.031 (0,8)	0.068 (1,72)
T10	195 6.88	55 1.93	.604 (15.35)	0.152 (3.85)	.440 ± .020 (11.2 ±.5)	0.020 (0,5)	0.053 (1,35)	0.084 (2,14)
T11	160 5.64	45 1.58	.726 (18.45)	0.186 (4.8)	.539 ± .032 (13.7 ± .8)	0.030 (0,7)	0.062 (1,65)	0.101 (2,57)

P00 PIN PLUNGER (IP67)

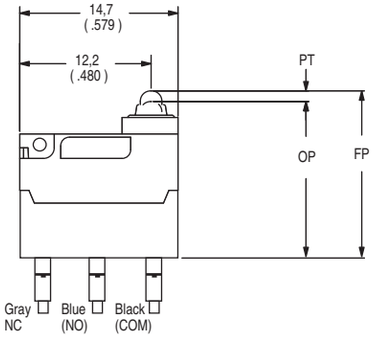

T10 .25 LEVER (IP67)

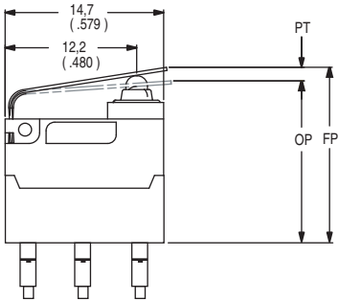

T11 .28 LEVER (IP67)

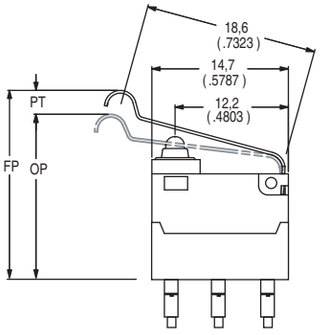

SWITCH CHARACTERISTICS "J" TERMINATION ONLY

Actuator code	Maximum Operate Force (grams/oz.)	Minimum Release Force (grams/oz.)	Free Position Max	Maximum Pre-travel	Operate Position	Maximum Differential	Low Overtravel min. (L)	High Overtravel min. (H)
P00	130 4.59	13 0.45	.650 (16.50)	0.032 (0,8)	.593 ± .020 (15.05 ± 0.5)	.012 (0.3)	0.031 (0.8)	0.068 (1,72)
T10	195 6.88	55 1.93	.781 (19.85)	0.152 (3.85)	.618 ± .028 (15.7 ± .7)	0.020 (0.5)	0.053 (1.35)	0.084 (2,14)
T11	160 5.64	45 1.58	.904 (22.95)	0.188 (4.8)	.717 ± .039 (18.2 ± 1.0)	0.030 (0.7)	0.062 (1.65)	0.101 (2,57)

Third Angle Projection

Dimensions are shown: mm (inch)
Specifications and dimensions subject to change

ZMS Series
Subminiature Snap-acting Switches (IP65)

TERMINATIONS

P PC THRU-HOLE

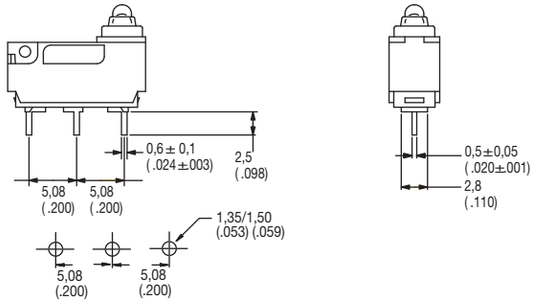

L LEFT FOOTED, PC THRU-HOLE

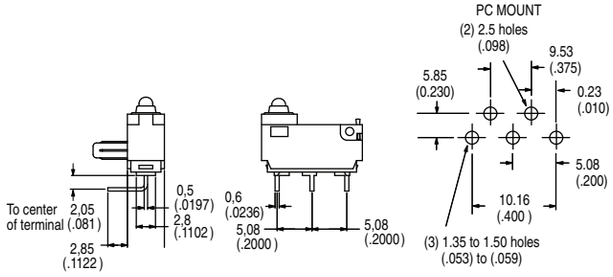

R RIGHT FOOTED, PC THRU-HOLE

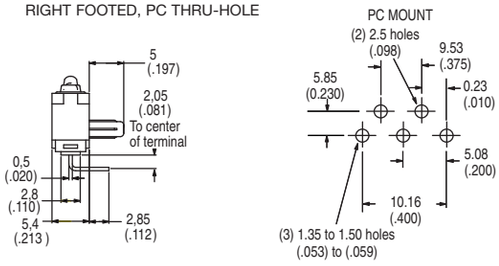

J WIRE LEADS BOTTOM
(IP67)

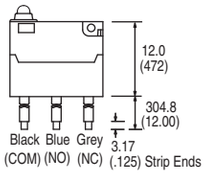

K RIGHT SIDE
(IP67)

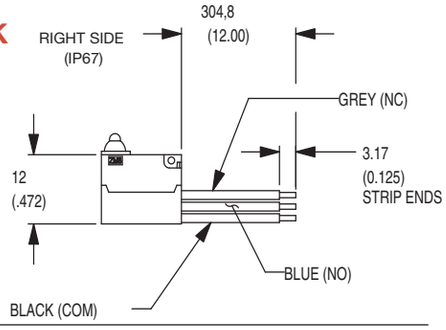

S SOLDER TYPE

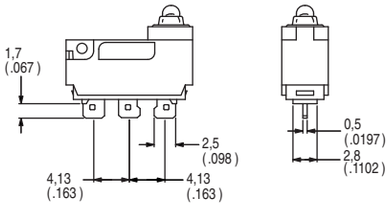

W LEFT SIDE
(IP67)

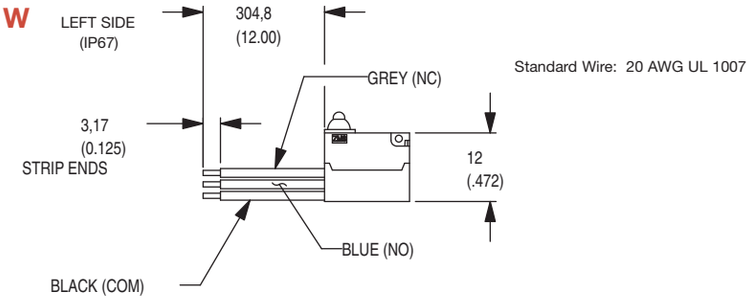

Standard Wire: 20 AWG UL 1007

MOUNTING STYLES

S STD (NO SUPPORT POST)

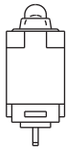

L SUPPORT POST LEFT

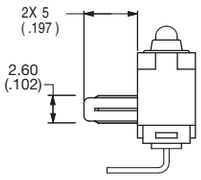

R SUPPORT POST RIGHT

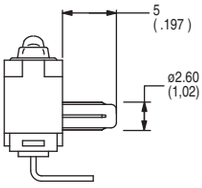

CIRCUITRY

C SPDT (Single Pole, Double Throw)

W SPST, NC (Single Pole, Single Throw, Normally Closed)

Y SPST, NO (Single Pole, Single Throw, Normally Open)

Third Angle
Projection

Dimensions are shown: mm (inch)
Specifications and dimensions subject to change

ZMSM Series with Mounting Hole Subminiature Snap-acting Switches (IP65)

Features/Benefits

- ***Reliable snap-acting mechanism***
- ***Long electrical and mechanical life***
- ***Various PCB terminals and actuators***
- ***RoHS compatible***
- ***IP67 with potted wires only***

Typical Applications

- ***Communication devices***
- ***Testing equipment***
- ***Security/Alarm systems***

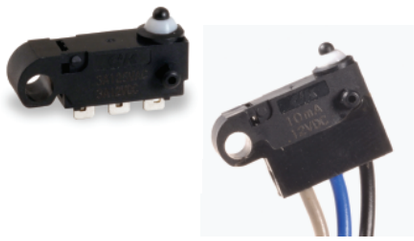

UL61058-1 c UL us

Specifications

CONTACT RATING: 3A@ 125 V AC/ 3A@ 12 V DC, 0.01 A@ 12 V DC.
ELECTRICAL LIFE: 100,000 cycles @ 0.01 A, 12 V DC / 100,000 cycles @ 3A, 12 V DC, 6,000 cycles @ 3A, 125 VAC
INSULATION RESISTANCE: 100 M ohm min.
DIELECTRIC STRENGTH: 500 Vrms.
OPERATING TEMPERATURE: see chart below.
OPERATING FORCE: 130 grams.

* Low Level=conditions where no arcing occurs during switching, i.e., 0.4 VA max. @ 20 V AC or DC max.

Materials

CASE: Nylon
COVER/ACTUATOR: PBT
MOVABLE CONTACTS: 3 Amp silver, 0.01A gold
STATIONARY CONTACTS: 3 Amp silver, 0.01A gold
TERMINALS: Brass, Pre-plated with silver
LEVER: Stainless steel

NOTE: Specifications and materials listed above are for switches with standard options. For information on specific and custom switches, consult Customer Service Center.

Build-A-Switch

To order, simply select desired option from each category and place in the appropriate box. Available options are shown and described on pages J-62 through J-64. For additional options not shown in catalog, consult Customer Service Center.

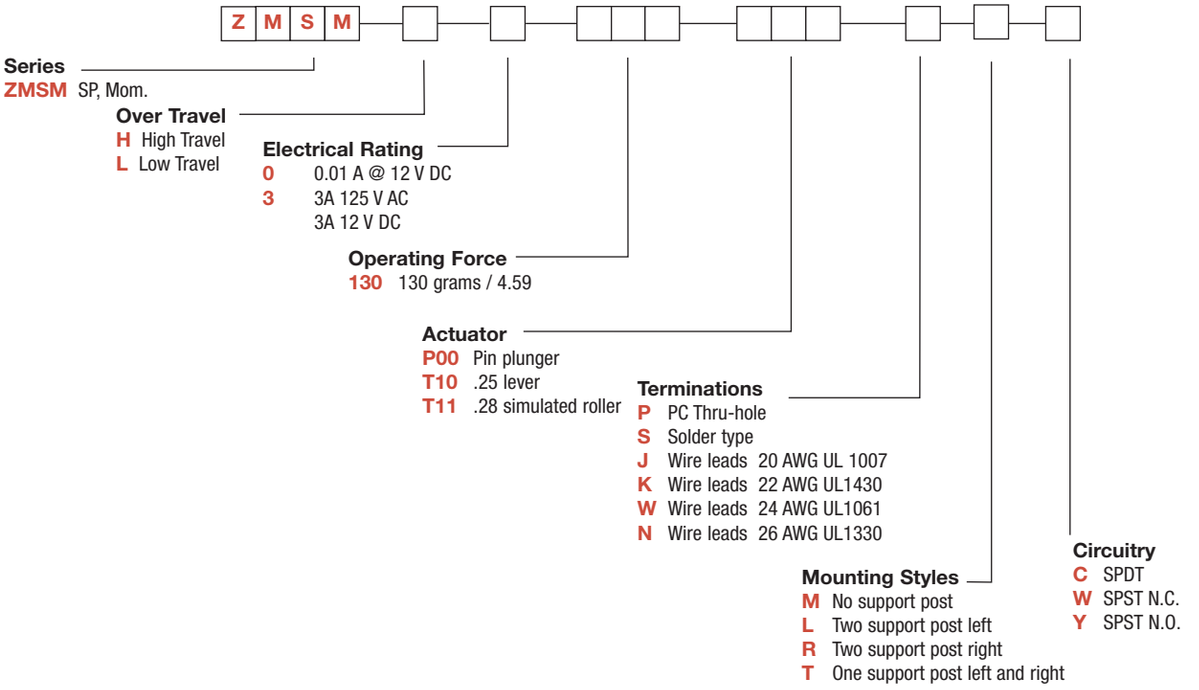

ZMSM Series with Mounting Hole Subminiature Snap-acting Switches (IP65)

SERIES

ZMSMH HIGH OVER TRAVEL

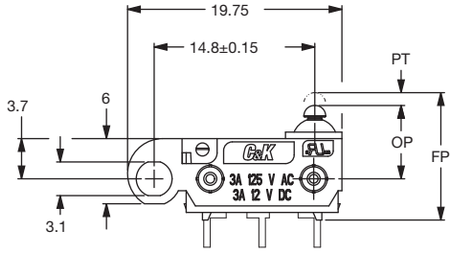

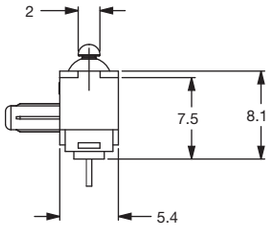

MODEL SHOWN: ZMSMHXXXXP00PLC

ZMSML LOW OVER TRAVEL

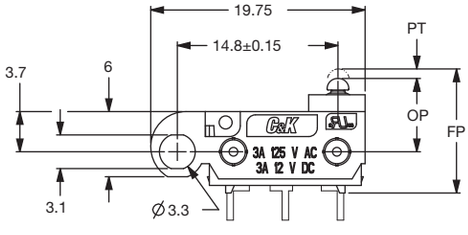

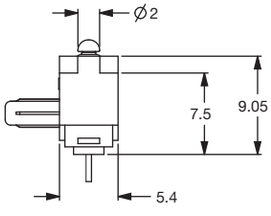

MODEL SHOWN: ZMSMLXXXXP00PLC

ELECTRICAL RATING

OPTION CODE	RoHS COMPLIANT*	RoHS COMPATIBLE*	CONTACT MATERIAL		ELECTRICAL RATING
			MOVABLE CONTACT	STATIONARY CONTACT	
0	Yes	Yes	Gold alloy		0.01 A @ 12 V DC
3	Yes	Yes	Silver alloy		3 AMPS @ 125 V AC 3 AMPS @ 12 V DC

Model c UL us with option "S" (solder type) only.

Consult Customer Service center for availability and delivery of nonstandard ratings.

OPERATING FORCE

OPTION CODE	BASIC SWITCH OPERATING FORCE (OZ./GRAMS)
130	130 4.59

Third Angle Projection

Dimensions are shown: mm

Specifications and dimensions subject to change

ACTUATOR

P00 PIN PLUNGER (IP65)

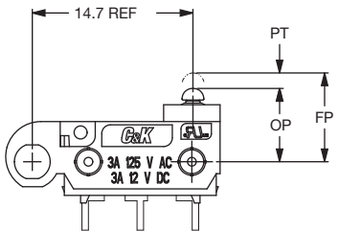

MODEL SHOWN: ZMSMLXXXXP00PLC

T10 .25 LEVER (IP65)

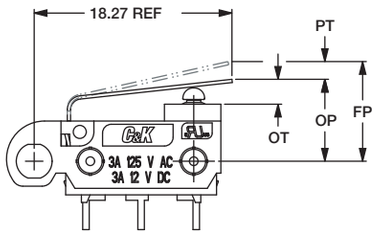

MODEL SHOWN: ZMSMLXXXXT10PLC

T11 LEVER (IP65)

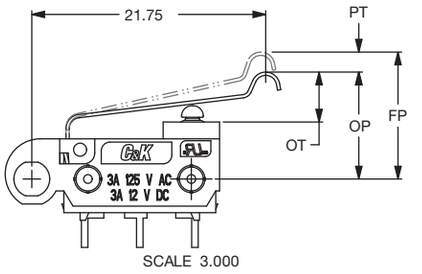

MODEL SHOWN: ZMSMLXXXXT11PLC

SWITCH CHARACTERISTICS

Actuator code	Maximum Operate Force (grams/oz.)	Minimum Release Force (grams/oz.)	Free Position Max (mm)	Maximum Pre-travel (mm)	Operate Position (mm)	Maximum Differential (mm)	Low Overtravel min. (mm)	High Overtravel min. (mm)
P00	130 4.59	13 0.45	7.35	0.8	6.75 ± 0.3	0.3	0.8	1.75
T10	195 6.88	55 1.93	10.70	3.85	7.40 ± 0.8	0.5	1.35	2.3
T11	160 5.64	45 1.58	13.80	4.8	9.90 ± 0.8	0.7	1.65	2.6

TERMINATIONS

P PC THRU-HOLE (IP65)

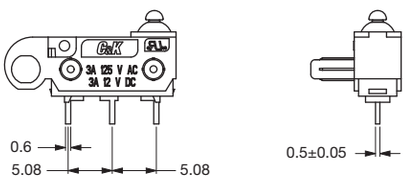

MODEL SHOWN: ZMSMHXXXXP00PLC

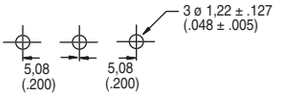

PC MOUNTING HOLE

S SOLDER TYPE (IP65)

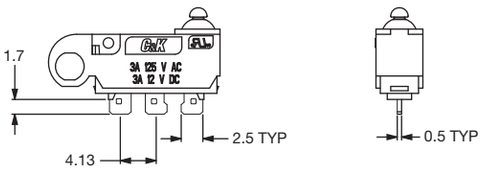

MODEL SHOWN: ZMSMHXXXXP00SMC

J WIRE LEADS BOTTOM (IP67)

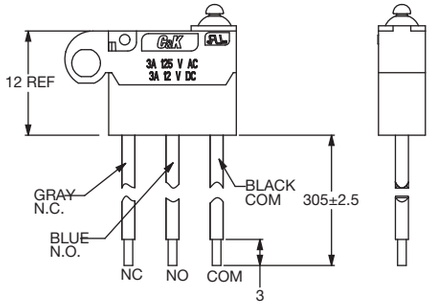

Standard Wire: 20 AWG UL 1007

Available options - must specify
22AWG UL1430
24AWG UL1061
26AWG UL1330

Third Angle Projection

Dimensions are shown: mm
Specifications and dimensions subject to change

ZMSM Series with Mounting Hole
Subminiature Snap-acting Switches (IP65)

MOUNTING STYLES

M NO SUPPORT POSTS

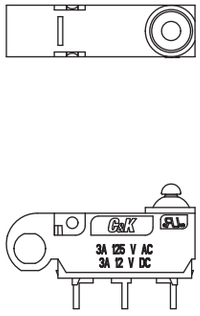

MODEL SHOWN:
ZMSMHXXXXP00PMC

L TWO SUPPORT POSTS LEFT

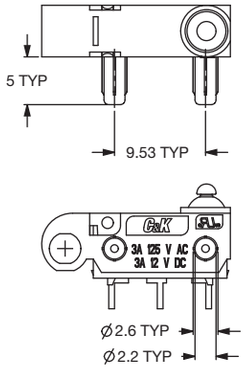

POSTS LEFT
MODEL SHOWN:
ZMSMHXXXXP00PLC

R TWO SUPPORT POSTS RIGHT

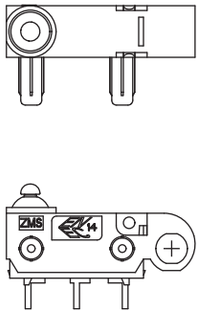

POSTS RIGHT
MODEL SHOWN:
ZMSMHXXXXP00PRC

T ONE SUPPORT POST LEFT & RIGHT

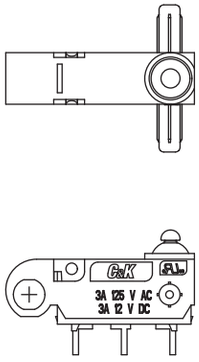

LEFT & RIGHT
MODEL SHOWN:
ZMSMHXXXXP00PTC

CIRCUITRY

C SPDT (Single Pole, Double Throw)

W SPST, NC (Single Pole, Single Throw, Normally Closed)

Y SPST, NO (Single Pole, Single Throw, Normally Open)

Third Angle Projection

Dimensions are shown: mm
Specifications and dimensions subject to change

MDS Series
Micro Snap-acting Detect Switches

Features/Benefits

- ***Snap-acting tactile feel***
- ***Small package size***
- ***Available in vertical or right angle PCB mount***
- ***RoHS compliant and compatible***

Typical Applications

- ***Detect the presence of a mechanical device***
- ***Medical devices***
- ***Consumer electronic devices***
- ***ATCA applications***

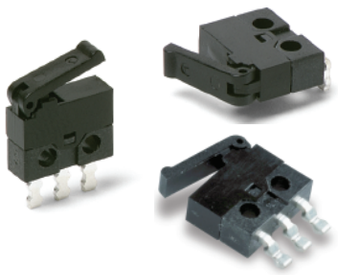

Specifications

CONTACT RATING: 300mA @ 30 VDC.
MECHANICAL & ELECTRICAL LIFE: 30,000 operations.
CONTACT RESISTANCE: 100 m Ω max. inital
OPERATING TEMPERATURE: –25°C to +70°C.
SOLDERABILITY: According to lead free solder profiles.
PACKAGING: Available in bulk or tape and reel.
OPERATING FORCE: 50g Max.
RELEASE FORCE: 3g Min.

Materials

BASE: PA9T
COVER & ACTUATOR: PA9T
MOVABLE CONTACT: Copper alloy, silver plated.
STATIONARY CONTACTS: Copper alloy, silver plated.
TERMINALS: Copper alloy, silver plated.

NOTE: MDS series is RoHS compliant, and compatible. See technical data section of this catalog for RoHS compliant and compatible definitions and specifications.

NOTE: Specifications and materials listed above are for switches with standard options. For information on specific and custom switches, consult Customer Service Center.

Build-A-Switch

To order, simply select desired option from each category and place in the appropriate box. Available options are shown and described on pages J-66 through J-70. For additional options not shown in catalog, consult Customer Service Center.

M D S — — —

MDS Series
Micro Snap-acting Detect Switches

SERIES M D S

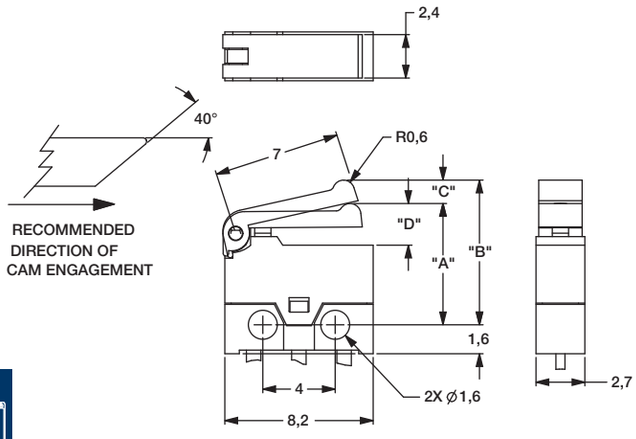

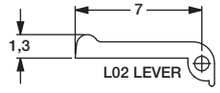

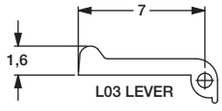

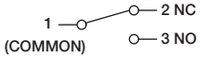

SCHEMATIC SPDT

OPERATING CHARACTERISTICS			
		LEVER L02	LEVER L03
OPERATING POSITION	DIM 'A'	6.7±0.5	7.0 +/-0.5
FREE POSITION	DIM 'B'	8 MAX	8.5 MAX
PRETRAVEL	DIM 'C'	1,8 MAX	1.8 MAX
OVER TRAVEL	DIM 'D'	0.3 MIN	0.3 MIN
CONTACT RATING		0.3A @ 30 VDC	0.3A @ 30VDC
OPERATING FORCE		50 GRAMS F. MAX	50 GRAMS F. MAX

OPERATING FORCE

OPTION CODE	OPERATING FORCE
65	50 grams max.

ELECTRICAL RATING

OPTION CODE	ELECTRICAL RATING
00A	300mA @ 30 V DC

ACTUATOR

L02 STANDARD LEVER

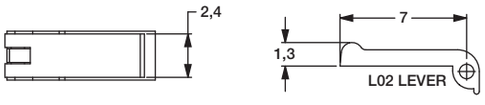

L03 HIGHER OP LEVER

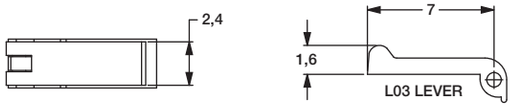

Third Angle Projection

Dimensions are shown: mm
Specifications and dimensions subject to change

TERMINATIONS

PCB Mounting Pattern

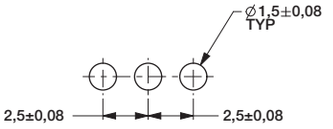

PCB MOUNTING

PS PC THRU-HOLE, SHORT STRAIGHT

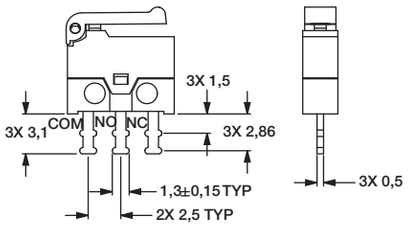

PL PC THRU-HOLE, LONG STRAIGHT

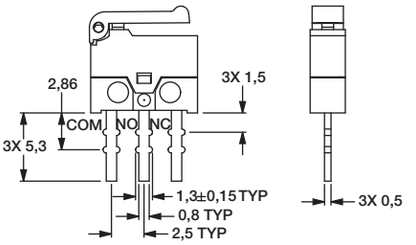

RS PC THRU-HOLE, SHORT RIGHT BEND

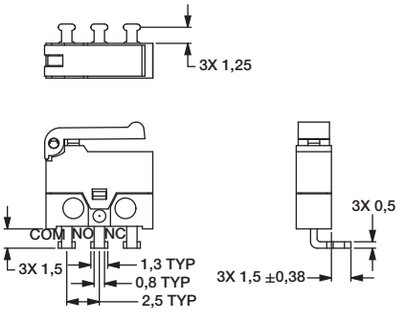

RL PC THRU-HOLE, LONG SHORT BEND

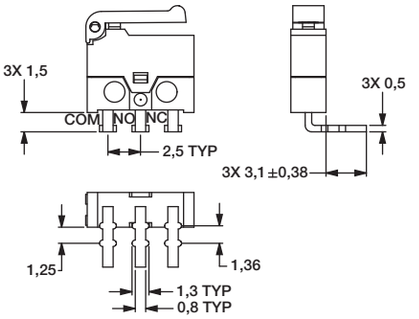

LS PC THRU-HOLE, SHORT LEFT BEND

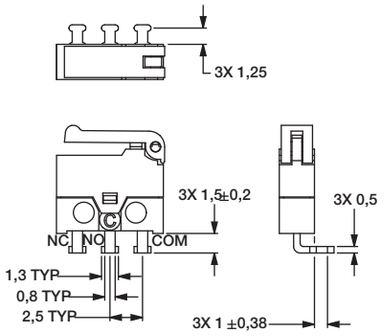

LL PC THRU-HOLE, LONG LEFT BEND

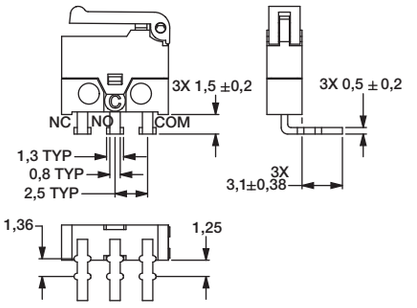

Third Angle Projection

Dimensions are shown: mm
Specifications and dimensions subject to change

TERMINATIONS

SL SMT, LEFT MOUNT

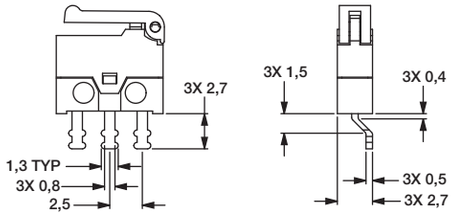

SMT Mounting Pattern

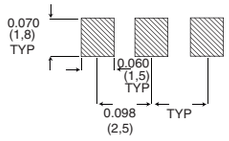

SR SMT, RIGHT MOUNT

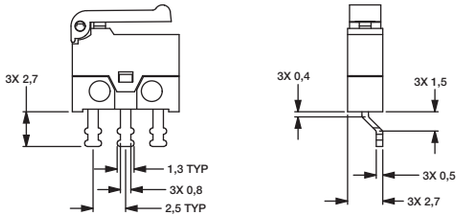

SMT Mounting Pattern

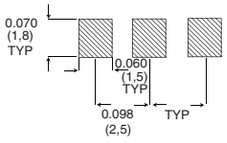

CL SMT, LEFT BRACKET WITH PINS

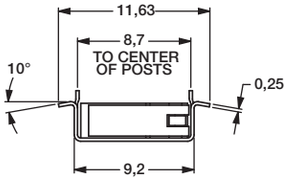

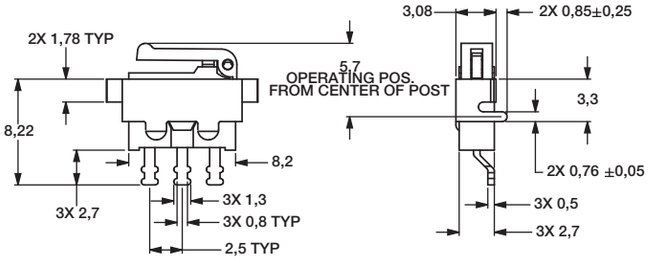

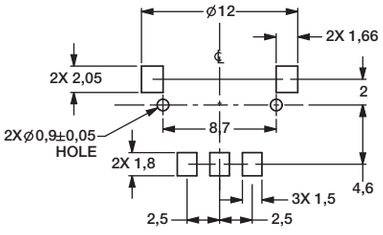

CR SMT, RIGHT BRACKET WITH PINS

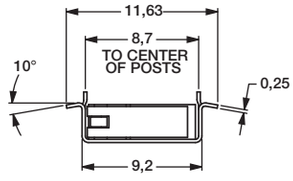

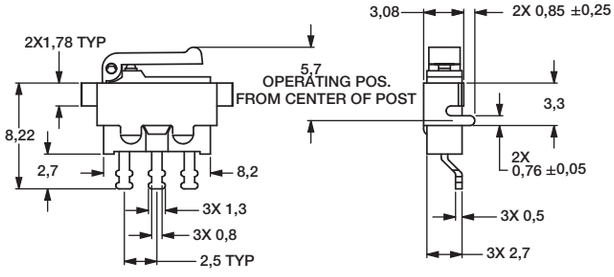

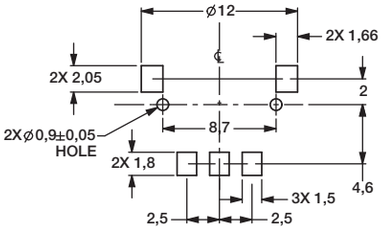

Third Angle Projection

Dimensions are shown: mm
Specifications and dimensions subject to change

TERMINATIONS

BL SMT, LEFT BRACKET NO PINS

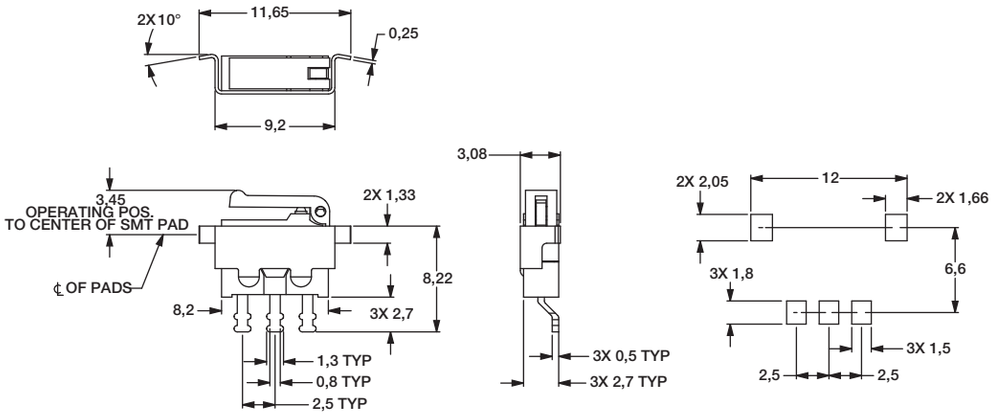

BR SMT, RIGHT BRACKET NO PINS

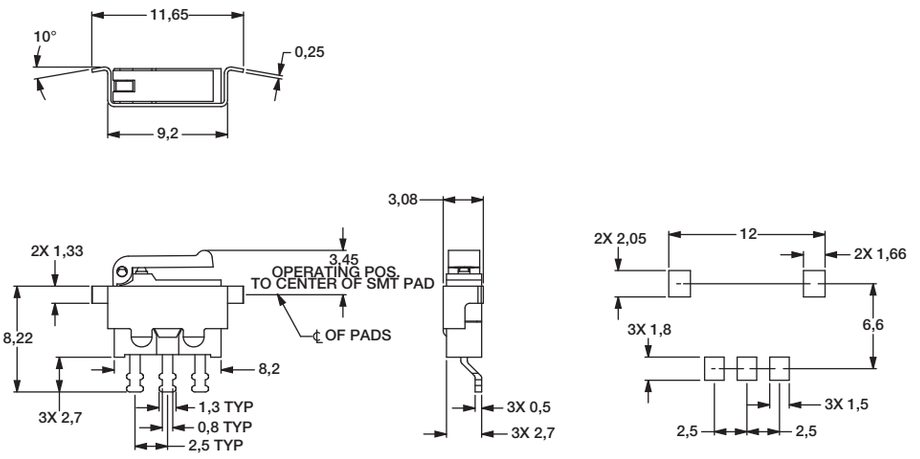

Third Angle Projection

Dimensions are shown: mm
Specifications and dimensions subject to change

TAPE AND REEL

SL SMT, LEFT MOUNT

SR SMT, RIGHT MOUNT

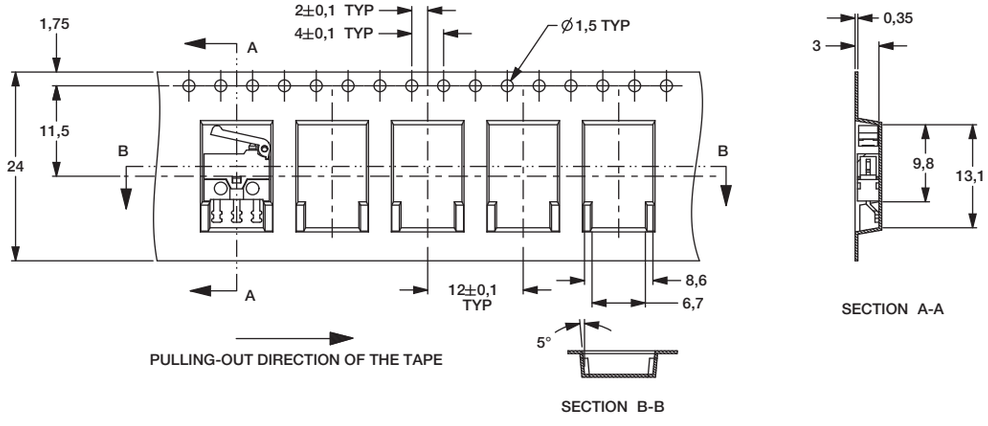

CL SMT, LEFT MOUNT

CR SMT, RIGHT MOUNT

BL SMT, LEFT MOUNT

BR SMT, RIGHT MOUNT

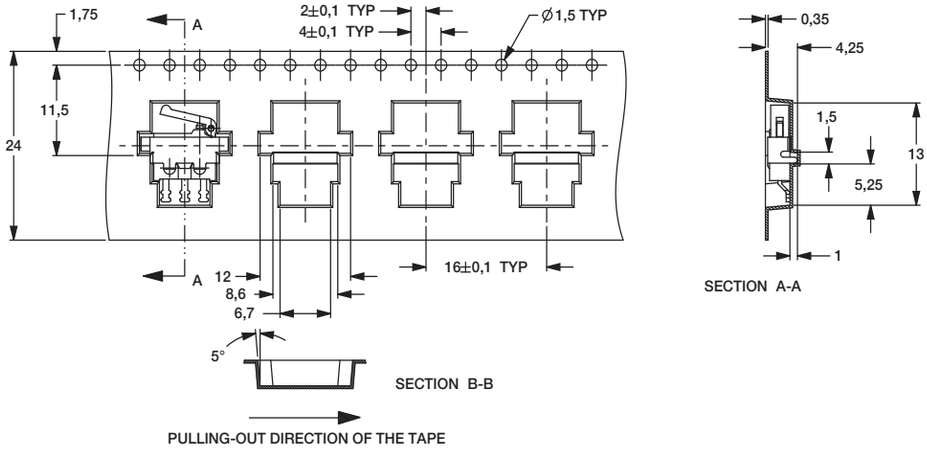

Supplied in carrier tape meeting the EIA-481-2 standard for 24mm tape.

Packaging quantity: SL and SR; 1,600 pieces per reel
CL, CR, BL and BR; 1,000 pieces per reel

Third Angle Projection

Dimensions are shown: mm
Specifications and dimensions subject to change

HB Series
Single Pole Standard Precision Snap-acting Switches

Features/Benefits

- ***Low differential travel, high repeatability***
- ***Long life—150,000 cycles typical***
- ***Single and double pole circuitry***
- ***Sealed actuator and case***

Typical Applications

- ***Thermostats***
- ***Motors***
- ***Industrial controls***

Specifications

CONTACT RATING: From low level* to 20 AMPS @ 480 V AC; see ELECTRICAL RATING option section for complete listings.

ELECTRICAL LIFE: 150,000 cycles at 20 AMPS @ 250 V AC. consult Customer Service Center for typical life at other ratings.

INSULATION RESISTANCE: 1,000 M ohm min.

DIELECTRIC STRENGTH: 1,500 Vrms min. @ sea level.

OPERATING TEMPERATURE: –67°F to 302°F (–55°C to 150°C).

OPERATING FORCE: From 4 oz. to 26 oz. max. at actuator button available.

MOUNTING SCREWS: Torque 3 in/lbs max. (Note: Exceeding 3 in/lbs torque may change operating characteristics and increase the possibility of cracking switch case).

TERMINAL SCREWS: Torque 4 in/lbs max.

PANEL MOUNTING BUSHING: Torque 4-6 in/lbs max.

DEGREE OF PROTECTION: IP65; Dust-proof, water splash and dew condensation.

* Low Level=conditions where no arcing occurs during switching, i.e., 0.4 VA max. @ 20 V AC or DC max.

Materials

SWITCH HOUSING: Heat resistant/electrical grade phenolic.

INSERTS: Brass alloy.

ACTUATOR BUTTON: Moisture resistant phenolic.

SPRING: Copper alloy.

PIVOT: Brass alloy.

MOVABLE CONTACTS: Gold alloy for ratings 1 AMP or less. Fine silver for ratings greater than 1 AMP and motor load ratings less than 1/2 HP @ 125 V AC. Silver alloy for motor load ratings 1/2 HP @ 125 V AC or greater.

STATIONARY CONTACTS: Gold alloy for ratings 1 AMP or less. Fine silver welded to copper base for ratings greater than 1 AMP and motor load ratings less than 1/2 HP @ 125 V AC. Silver alloy on copper base for motor load ratings 1/2 HP @ 125 V AC or greater.

TERMINALS: Brass alloy, bright tin plated.

NOTE: Specifications and materials listed above are for switches with standard options. For information on specific and custom switches, consult Customer Service Center.

Build-A-Switch

To order, simply select desired option from each category and place in the appropriate box. Available options are shown and described on pages J-72 through J-76. For additional options not shown in catalog, consult Customer Service Center.

H B — S — ☐ — ☐☐ — ☐☐ — S — ☐☐ — ☐☐ — C

Series
HB Precision Snap-acting Switches

Function
S SP

Contact Separation
2 .020"
1 .010"
4 .040"
7 .070"

Operating Force
KG 18 oz./510 grams
GF 4 oz./113 grams
KA 9 oz./255 grams
KC 13 oz./368 grams
KH 20 oz./567 grams
PB 26 oz./737 grams

Electrical Rating
B4 20 A, 125, 250, 480 V AC; 0.25 A, 250 V DC; 0.5 A, 125 V DC
A2 5 A, 125, 250 V AC
B6 20 A, 125, 250, 480 V AC; 0.25 A, 250 V DC; 0.5 A, 125 V DC; 3/4 HP, 125 V AC; 1 1/2 HP, 250 V AC
F5 1 A,125 V AC; 1 A, 30 V DC
F9 22 A, 125, 277 V AC; 15 A, 480 V AC; 1/4 HP, 125 V AC; 1/2 HP, 250 V AC

Mounting Style
S Standard

Actuator
P0 Pin plunger
A0 Lever roller
D0 Stub plunger
F0 Reverse acting lever roller
J0 High overtravel plunger
R5 Perpendicular roller plunger
T0 Lever
TS Sealed Lever
Y0 Reverse acting lever

Terminations
11 Flat base, solder, 4-40 screws
41 Flat base, .250" quick connect
55 Step base, cup washers, 6-32 screws

Circuitry
C SPDT

HB Series
Single Pole Standard Precision Snap-acting Switches

Sealed Actuator and Case

To provide reliable service under environmental conditions that might damage standard precision switches, various HB Series switch models are sealed against the entrance of airborne contaminants and/or splashing liquids. The clearance between the operating plunger and the cover is sealed with a silicone boot and the base cover joint is sealed with an epoxy adhesive. These models are designed to meet requirements of IP65 (dust proof, water splash and dew condensation). For additional information on sealed switches, consult our Customer Service Center.

SERIES

HB PRECISION SNAP-ACTING SWITCHES

FUNCTION

S SINGLE POLE SWITCH

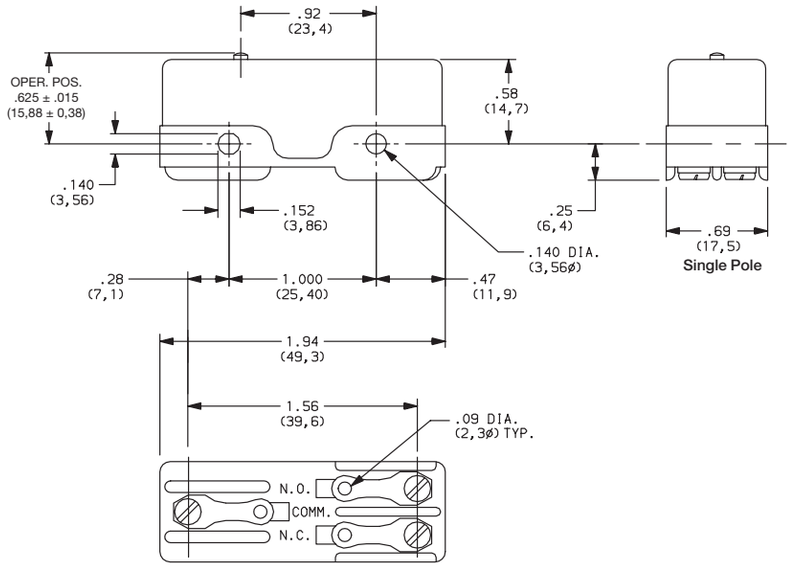

NOTE: To select switching function, see CIRCUITRY section, page J-52.

CONTACT SEPARATION

OPTION CODE	NOMINAL CONTACT SEPARATION (in./mm)
2	.020 (0,51)
1	.010 (0,25)
4	.040 (1,02)
7	.070 (1,78)

Switches with 1 AMP rating (option code 'F5') are available only with .020 contact separation (option '2').

Switches with 1/2 HP, 125 V AC rating or greater (option codes 'B5 and B6') are not available with .010 contact separation (option code '1').

DIFFERENTIAL TRAVEL SPECIFICATION LIMITS FOR VARIOUS CONTACT SEPARATIONS

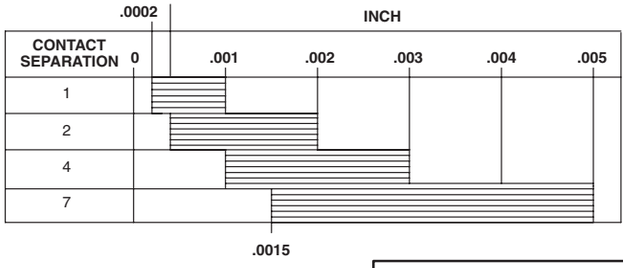

Third Angle Projection

Dimensions are shown: inches (mm)
Specifications and dimensions subject to change

OPERATING FORCE

OPTION CODE	MAXIMUM OPERATING FORCE (OZ./GRAMS)	STANDARD CONTACT SEPARATION (inch)
KG	18 510	.020
GF	4 115	.010
KA	9 255	.010
KC	13 370	.020
KH	20 570	.040
PB	26 740	.070

OPERATING FORCE SPECIFICATION LIMITS
FOR VARIOUS CONTACT SEPARATIONS

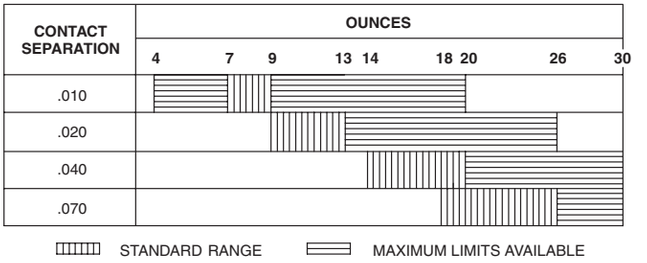

NOTE: All listed differential travel characteristics are based on standard operating force andcontact separation. For any other force or contact separation, consult Customer Service Center.
Operating force varies with actuator option, see ACTUATOR option section.

ELECTRICAL RATING

OPTION CODE	MOVABLE CONTACT	STATIONARY CONTACT	ELECTRICAL RATING
B4	Fine silver.	Fine silver welded to copper base.	20 AMPS @ 125, 250 & 480 V AC; 0.25 AMPS @ 250 V DC; 0.5 AMPS @ 125 V DC (UL).
A2			5 AMPS @ 125 & 250 V AC (UL).
B6	Precious metal alloy.	Precious metal alloy.	20 AMPS @ 125, 250 & 480 V AC; 0.25 AMP @ 250 V DC; 0.5 AMP @ 125 V DC; 3/4 HP @ 125 V AC; 1 1/2 HP @ 250 V AC (UL).
F5	Gold alloy.	Gold alloy.	Low level* to 1 AMP @ 125 V AC; 1 AMP @ 30 V DC (UL).
F9	Fine silver.	Fine silver welded to copper base.	22 AMPS @ 125 & 277 V AC; 15 AMPS @ 480 V AC; 1/4 HP @ 125 V AC; 1/2 HP @ 250 V AC; 277 V AC (UL).

* Note: See Technical Data section of this catalog for RoHS compliant and compatible definition and specifications.

AVAILABLE COMBINATIONS

ELECTRICAL RATING	OPERATING FORCE (oz.)					
	4 GF	9 KA	13 KC	18 KG	20 KH	26 PB
A2	•	•	•	•	•	•
B4	x	•	•	•	•	•
B6	x	x	x	•	•	•
F5	x	x	•	•	•	•
F9	x	x	x	•	•	•

• AVAILABLE
x NOT AVAILABLE

All models c RU us with all options
Consult Customer Service center for availability and delivery of nonstandard ratings.

* Low Level=conditions where no arcing occurs during switching,
i.e., 0.4 VA max. @ 20 V AC or DC max.

Third Angle Projection

Dimensions are shown: Inch (mm)
Specifications and dimensions subject to change

HB Series
Single Pole Standard Precision Snap-acting Switches

MOUNTING STYLE

S Standard

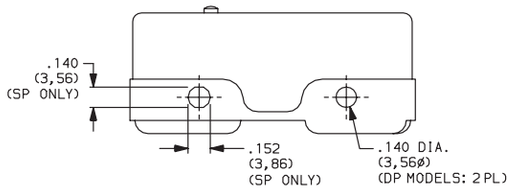

NOTE: Mounting holes will accept pins or screws of .139 dia. (3,53) max. on 1.000 ± .002 (25,4 ± 0,05) centers.

NOTE: Torque mounting screws 3 inlbs max.

ACTUATOR

OPTION CODE	NO. POLES	FIG.	DIM. A	DIM. B	DIM. C	DIM. D
A0	SP	1	.86 (21,8)	1.120 ± .060 (28,45 ± 1,52)	.38 dia. (9,7Ø)	1.03 (26,2)
D0	SP	3	.92 (23,4)	.844 ± .020 (21,44 ± 0,51)	—	—
F0	SP	2	.09 (2,3)	1.120 ± .050 (28,45 ± 1,27)	.38 dia. (9,7Ø)	.74 (18,8)
J0	SP	4	.86 (21,8)	.860±.030 (21,84±0,76)	—	—
P0	SP	5	.92 (23,4)	.625 ± .010 (15,88 ± 0,25)	—	—
R5	SP	6	.92 (23,4)	.62 (15,7)	.50 dia. (12,7Ø)	0.61 (15,5)
T0	SP	7	1.310 (33,27)	.720 ± .060 (18,28 ± 1,52)	1.03 dia. (26,2Ø))	—
TS*	SP	7	1.47 (37,3)	.720 ± .060 (18,28 ± 1,52)	1.03 dia. (26,2Ø)	—
Y0	SP	8	.05 (1,3)	.720 ± .030 (18,29 ± 0,76)	.74 dia. (18,8Ø)	2.65 (6,73)

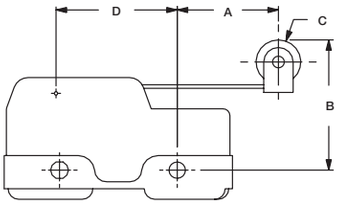

FIG. 1
Lever Roller

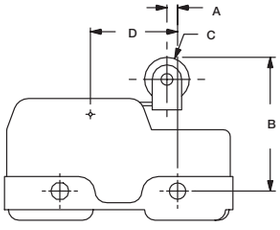

FIG. 2
Lever Roller

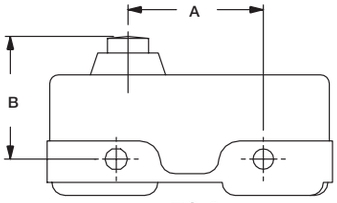

FIG. 3
Stub Plunger

* Actuators sealed against the entrance of airborne contaminants and/or splashing liquids.

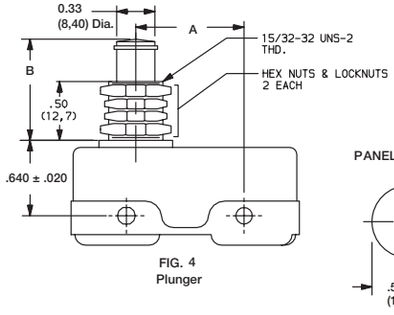

FIG. 4
Plunger

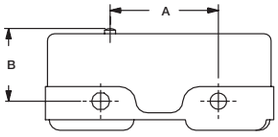

FIG. 5
Pin Plunger

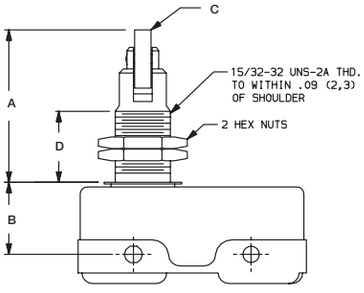

FIG. 6
Perpendicular Roller Plunger

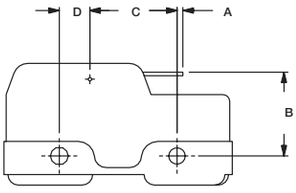

FIG. 8
Reverse Acting Lever

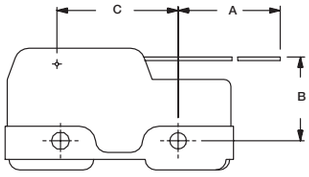

FIG. 7
Lever

Third Angle Projection

Dimensions are shown: Inches (mm)
Specifications and dimensions subject to change

ACTUATOR

	OPTION CODE	ACTUATOR								* SEALED ACTUATOR
		A0	D0	F0	J0	P0	R5	T0	Y0	TS
MAXIMUM OPERATING FORCE (OZ./GRAMS)	GF	—	—	—	—	4 115	—	—	—	—
	KA	3 85	9.5 269	10 284	10 284	9 255	10 284	2 60	10 284	2 56
	KC	—	13 370	10 284	13 370	13 370	13 370	—	10 284	—
	KG	3.5 100	—	—	—	18 510	—	2.5 71	—	2.5 71
	KH	4 115	20 570	20 570	20 570	20 570	20 570	3 85	20 570	3 85
	PB	4.5 130	26 740	20 570	26 740	26 740	26 740	3.5 100	20 570	3.5 100
MINIMUM RELEASE FORCE (OZ./GRAMS)	GF	—	—	—	—	1 28	—	—	—	—
	KA	.75 21	4 110	3 85	4 110	4 110	4 110	.5 14	3 85	.5 14
	KC	1.7 48	4 110	3 85	4 110	4 110	4 110	—	3 85	—
	KG	.75 21	—	—	—	4 110	—	.5 14	—	.5 14
	KH	.75 21	4 110	3 85	4 110	4 110	4 110	.5 14	3 85	.5 14
	PB	.75 21	4 110	3 85	4 110	4 110	4 110	.5 14	3 85	.5 14

NOTE: For basic switch operating forces, see page J-71. * Actuators sealed against the entrance of airborne contaminants and/or splashing liquids.

	OPTION CODE	ACTUATOR								* SEALED ACTUATOR
		A0	D0	F0	J0	P0	R5	T0	Y0	TS
MAXIMUM DIFFERENTIAL TRAVEL (IN/MM)	GF	—	—	—	—	.0005 (0,013)	—	—	—	—
	KA	.020 (0,51)	.0005 (0,013)	.005 (0,13)	—	.0005 (0,013)	—	.047 (1,19)	.005 (0,13)	.047 (1,19)
	KC	—	.002 (0,05)	.008 (0,20)	—	.002 (0,05)	—	—	.009 (0,23)	—
	KG	.062 (1,57)	—	—	—	.003 (0,08)	—	.078 (1,98)	—	.078 (1,98)
	KH	.080 (2,03)	.003 (0,76)	.020 (0,51)	—	.003 (0,08)	—	.093 (2,36)	.020 (0,51)	.093 (2,36)
	PB	.125 (3,18)	.007 (0,18)	.030 (0,76)	—	.005 (0,13)	—	.156 (3,96)	.031 (0,79)	.156 (3,96)
MAXIMUM PRETRAVEL (IN/MM)	GF	—	—	—	—	.020 (0,51)	—	—	—	—
	KA	.312 (7,92)	.020 (0,51)	0.8 (2,0)	.015 (0,38)	.015 (0,38)	.015 (0,38)	.38 (9,7)	.09 (2,3)	.38 (9,7)
	KC	—	.020 (0,51)	0.8 (2,0)	.020 (0,51)	.020 (0,51)	.020 (0,51)	—	.09 (2,3)	—
	KG	.312 (7,92)	—	—	—	.025 (0,64)	—	.38 (9,7)	—	.38 (9,7)
	KH	.38 (9,7)	.025 (0,64)	0.9 (2,3)	.025 (0,64)	.025 (0,64)	.025 (0,64)	.38 (9,7)	0.9 (2,3)	.38 (9,7)
	PB	.38 (9,7)	.030 (0,76)	0.9 (2,3)	.030 (0,76)	.030 (0,76)	.030 (0,76)	.38 (9,7)	0.9 (2,3)	.38 (9,7)
MINIMUM OVERTRAVEL (IN/MM)	GF	—	—	—	—	.005 (0,13)	—	—	—	—
	KA	.156 (3,96)	.055 (1,40)	.06 (1,5)	.22 (5,6)	.005 (0,13)	.141 (3,58)	.19 (4,8)	.06 (1,5)	.19 (4,8)
	KC	—	.055 (1,40)	0.9 (2,3)	.22 (5,6)	.005 (0,13)	.141 (3,58)	—	0.9 (2,3)	—
	KG	.156 (3,96)	—	—	—	.005 (0,13)	—	.19 (4,8)	—	.19 (4,8)
	KH	.156 (3,96)	.055 (1,40)	0.9 (2,3)	.22 (5,6)	.005 (0,13)	.141 (3,58)	.19 (4,8)	0.9 (2,3)	.19 (4,8)
	PB	.156 (3,96)	.055 (1,40)	0.9 (2,3)	.22 (5,6)	.005 (0,13)	.141 (3,58)	.19 (4,8)	0.9 (2,3)	.19 (4,8)

TERMINATIONS

11 FLAT BASE, SOLDER TERMINALS AND 4-40 SCREWS

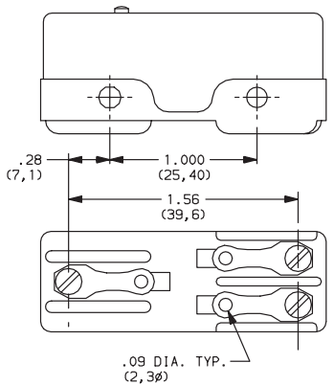

NOTE: Switches with flat base option have molded ribs that provide increased creep distance.

41 FLAT BASE, .250" QUICK CONNECT TERMINALS

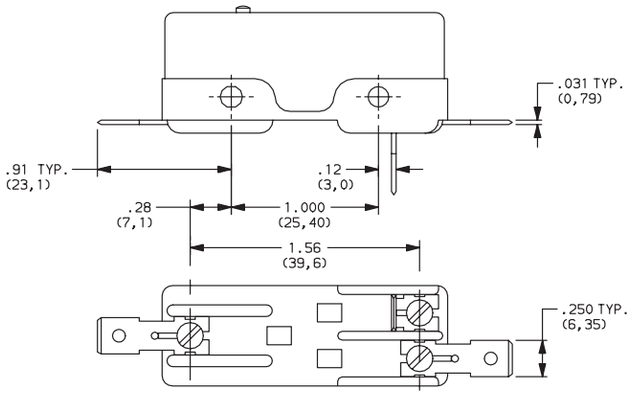

55 STEP BASE, 6-32 SCREWS AND CUP WASHERS

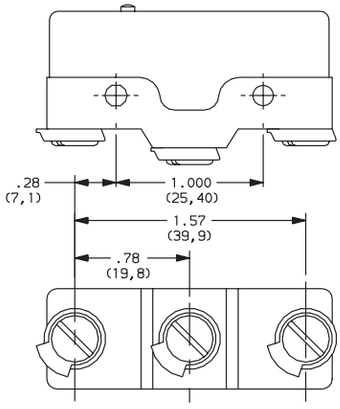

NOTE: Switches with step base option provide wide electrical clearance for screw terminal options.

CIRCUITRY

C DT (Double Throw, Normally Closed & Normally Open)

Third Angle Projection

Dimensions are shown: Inches (mm)
Specifications and dimensions subject to change

A Series
General Purpose Snap-acting Switches

Features/Benefits

- ***Low cost—high performance***
- ***Long electrical life***
- ***Single and double pole***
- ***Sealed actuator option available***

Typical Applications

- ***Enclosure equipment***
- ***Garage door openers***
- ***Vending machines***

Specifications

CONTACT RATING: From low level* to 30 AMPS @ 277 V AC.

ELECTRICAL LIFE: 75,000 cycles at 25 AMPS @ 250 V AC, 200,000 cycles at 15 AMPS @ 250 V AC.

INSULATION RESISTANCE: 1,000 M ohm min.

DIELECTRIC STRENGTH: 1,000 Vrms min. @ sea level.

OPERATING TEMPERATURE: –67°F to 185°F (–55°C to 85°C).

OPERATING FORCE: 20 oz. (567 grams) max. SP models. 40 oz. (1134 grams) max. DP models at actuator button.

MOUNTING: Torque screws 3 in/lbs max.

MOUNTING NUT: 20 in/lbs max. torque

* Low Level=conditions where no arcing occurs during switching, i.e., 0.4 VA max. @ 20 V AC or DC max.

NOTE: Specifications and materials listed above are for switches with standard options. For information on specific and custom switches, consult Customer Service Center.

Materials

SWITCH HOUSING: Heat resistant phenolic (UL 94V-0).

ACTUATOR BUTTON: Heat resistant phenolic (UL 94V-0).

SPRING: Copper alloy.

PIVOT: Brass alloy for models up to 15 AMPS.

Copper for 25 AMP models.

MOVABLE CONTACTS: Gold alloy for ratings 1 AMP or less. Fine silver for ratings up to 15 AMPS. Silver alloy for ratings of 30.1 AMPS.

STATIONARY CONTACTS: Gold alloy on brass base alloy for ratings 1 AMP or less. Fine silver welded on brass base alloy for ratings greater than 1 AMP up to 15 AMPS. Fine silver welded on copper alloy for ratings 30.1 AMPS.

TERMINALS: Brass alloy for 1 AMP up to 15 AMPS. Copper alloy for 30.1 AMPS.

Build-A-Switch

To order, simply select desired option from each category and place in the appropriate box. Available options are shown and described on pages J-78 through J-81. For additional options not shown in catalog, consult Customer Service Center.

A — ☐ — ☐☐ — ☐☐ — ☐☐ — 4 A — ☐

Series
A General Purpose Snap-acting Switches

No. Poles
S SP
D DP

Operating Force
KH* 20 oz./567 grams
PD** 30 oz./850 grams
GG* 5 oz./142 grams
PF** 40 oz./1134 grams

Electrical Rating
C2 15 A, 125, 250 V AC; 3/4 HP, 125 V AC; 1 1/2 HP, 250 V AC
F3 25 A, 125, 250 V AC; 1 HP, 125 V Ac; 2 HP, 250 V AC; 2 A, 24 V DC
F5 1 A, 125 V AC, 30 V DC

Actuator
P0 Pin plunger
T0 Lever
A0 Lever roller
A2 Lever roller, high force
BB Large red button
B1 Large black button
J0 High overtravel plunger
L0 Leaf
Q0 High operating position plunger
W0 Leaf roller

Terminations
4A .250" quick connect

Circuitry
C DT
W ST N.C.
Y ST N.O.

* Single Pole
** Double Pole

Dimensions are shown: Inch (mm)
Specifications and dimensions subject to change

A Series
General Purpose Snap-acting Switches

SERIES

A GENERAL PURPOSE SNAP-ACTING SWITCHES

NO. POLES

S SINGLE POLE SWITCH

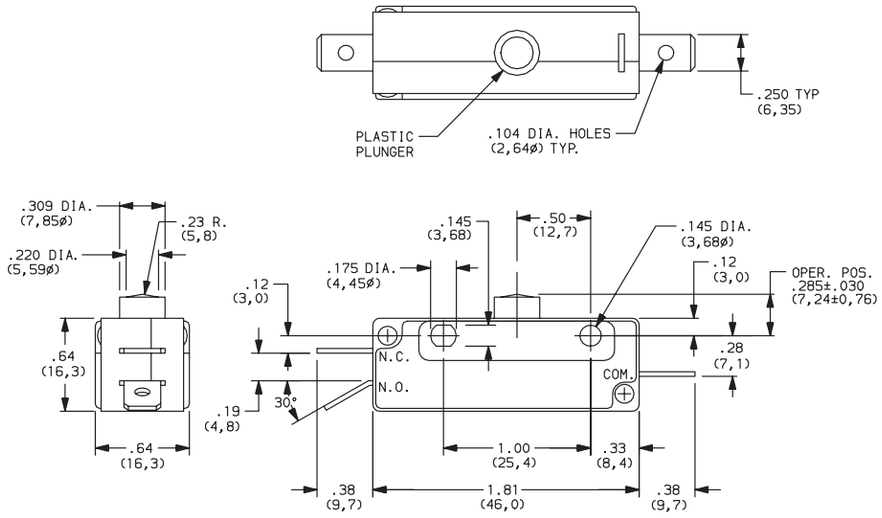

Mounting holes will accept pins or screws
of .139 dia. (3,53) max., on 1.000 (25,40) centers.

D DOUBLE POLE SWITCH

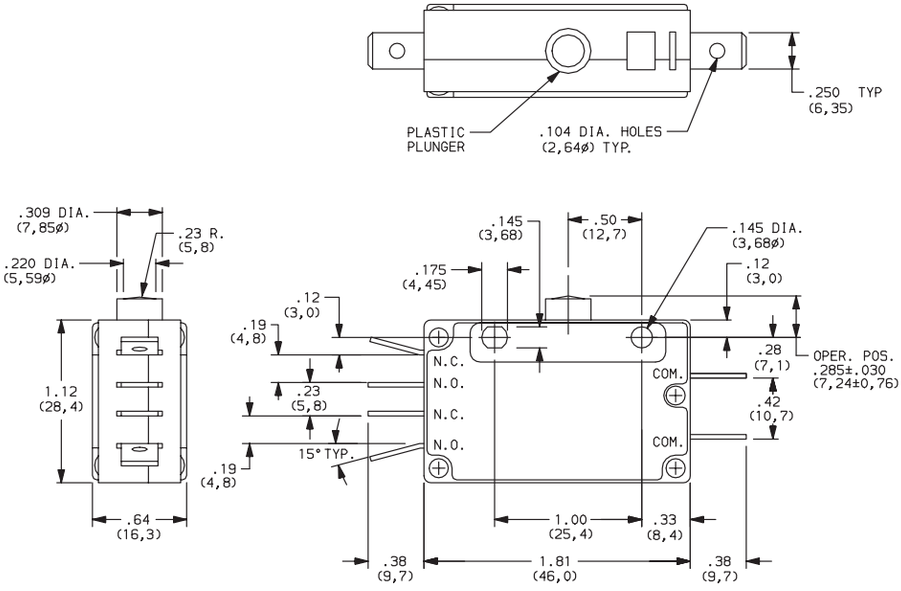

Mounting holes will accept pins or screws
of .139 dia. (3,53) max., on 1.000 (25,40) centers.

NOTE: To select switching function, see CIRCUITRY section, page J-81.

Third Angle Projection

Dimensions are shown: Inches (mm)
Specifications and dimensions subject to change

OPERATING FORCE

OPTION CODE	NO. POLES	BASIC SWITCH OPERATING FORCE (OZ./GRAMS)
KH	SP	20 567
PD	DP	30 850
GG	SP	5 142
PF	DP	40 1134

NOTE: Operating force varies with actuator, see ACTUATOR option section.

ELECTRICAL RATING

OPTION CODE	CONTACT MATERIAL		ELECTRICAL RATING
	MOVABLE CONTACT	STATIONARY CONTACT	
C2	Fine silver.	Fine silver welded on brass base alloy.	15 AMPS @ 125 & 250 V AC; 3/4 HP @ 125 V AC; 1-1/2 HP @ 250 V AC.
F3	Silver alloy.	Silver welded on copper base alloy.	25 AMPS @ 125 & 250 V AC; 1 HP @ 125 V AC; 2 HP @ 250 V AC; 2 AMPS @ 24 V DC.
F5	Gold alloy.	Gold alloy on brass base alloy.	From low level* to 1 AMP @ 125 V AC, 30 V DC.

All models c UL us with all options.

Contact Customer Service Center for availability and delivery of nonstandard ratings.

* Low Level=conditions where no arcing occurs during switching, i.e., 0.4 VA max. @ 20 V AC or DC max.

* Note: See Technical Data section of this catalog for RoHS compliant and compatible definition and specifications.

AVAILABLE COMBINATIONS

ELECTRICAL RATING	OPERATING FORCE (OZ./GRAMS)			
	GG 5 142	KH 20 567	PD 30 850	PF 40 1134
C2	•	•	•	•
F3	x	•	•	•
F5	•	•	•	•

• AVAILABLE
x NOT AVAILABLE

Third Angle Projection

Dimensions are shown: Inch (mm)
Specifications and dimensions subject to change

A Series
General Purpose Snap-acting Switches

ACTUATOR

OPTION CODE	FIG.	DIM. A	DIM. B	DIM. C	DIM. D	DIM. E	DIM. F
P0	1	.50 (12,7)	.285 ± .030 (7,24 ± 0,76)	–	–	–	–
A0	3	1.38 (35,1)	.718 ± .062 (18,24 ± 1,57)	.375 dia. (9,53Ø)	.50 (12,7)	.50 (12,7)	–
A2	4	1.25 (31,8)	.718 ± .062 (18,24 ± 1,57)	.375 dia. (9,53Ø)	.50 (12,7)	–	–
B1	6	1.50 (38,1)	.40 ± 0.1 (10,2 ± 2.54)	.98 dia. (24,9Ø)	–	–	–
BB	6	1.50 (38,1)	.40 ± 0.1 (10,2 ± 2.54)	.98 dia. (24,9Ø)	–	–	–
J0	5	.50 (12,7)	.810 ± .030 (20,6 ± 0,8)	.38 (9,7)	.25 dia. (6,4Ø)	–	–
L0	2	1.62 (41,1)	.312 ± .062 (17,92 ± 1,57)	.50 (12,7)	–	–	–
Q0	5	.50 (12,7)	.670 ± .030 (17,02 ± 0,76)	.38 (9,6)	.25 dia. (6,4Ø)	–	–
T0	7	1.50 (38,1)	.318 ± .062 (8,08 ± 1,57)	.50 (12,7)	.50 (12,7)	–	–
W0	8	1.50 (38,1)	.801 ± .062 (20,34 ± 1,57)	.375 dia. (9,53ø)	.50 (12,7)	–	–

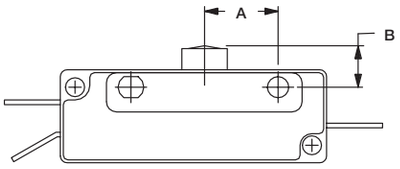

FIG. 1
High Overtravel Plunger

NOTE: The "H0" high overtravel plunger option provides .100 (2,54) min. overtravel and longer mechanical life (1,000,000 operations typical).

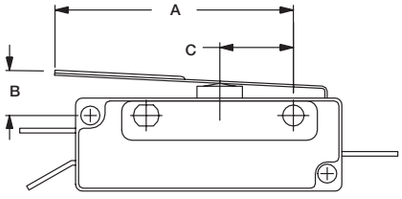

FIG. 2
Leaf

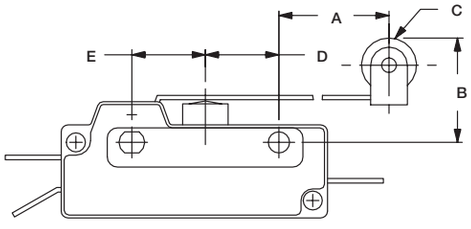

FIG. 3
Lever Roller

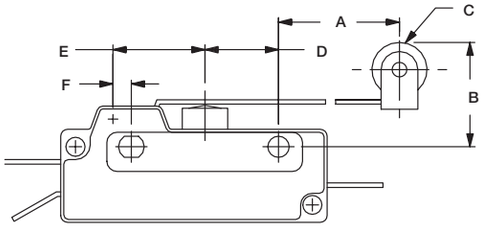

FIG. 4
Lever roller (High Force)

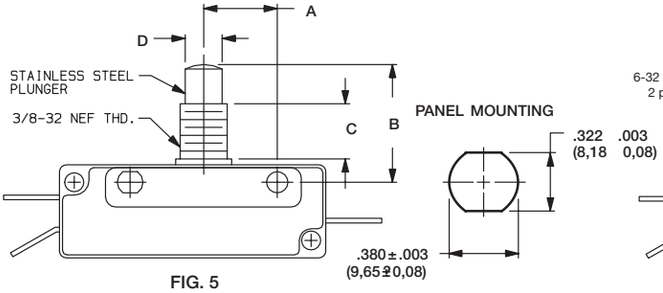

FIG. 5
High Overtravel Plunger

Torque 20 in/lbs max. (Nut)

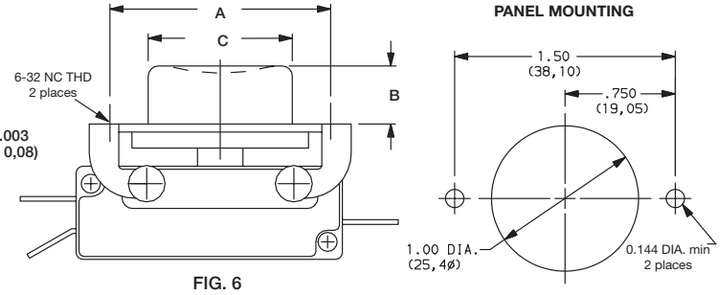

FIG. 6
B1 – Black Button
BB – Red Button

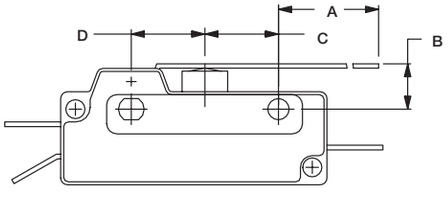

FIG. 7
Lever

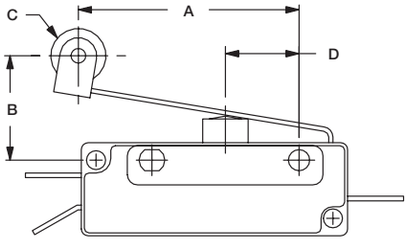

FIG. 8
Leaf Roller

Third Angle Projection

Dimensions are shown inches (mm)
Specifications and dimensions subject to change

ACTUATOR

SWITCH CHARACTERISTICS

OPTION CODE	MAXIMUM OPERATING FORCE (OZ./GRAMS)				MINIMUM RELEASE FORCE (OZ./GRAMS)				MAXIMUM PRETRAVEL				MINIMUM OVERTRAVEL				OPERATING POSITION			
	GG S.P.	KH S.P.	PD D.P	PF D.P.	GG S.P.	KH S.P.	PD D.P	PF D.P.	GG S.P.	KH S.P.	PD D.P	PF D.P.	GG S.P.	KH S.P.	PD D.P	PF D.P.	GG S.P.	KH S.P.	PD D.P	PF D.P.
A0	1.5 42.5	4 113	6 170	10 283	0.3 8.5	0.5 14	1 28		.312 (7,92)				312 (7,92)		.187 (4,75)		.718 (18,24)			
A2	1.5 42.5	4 113	6 170	10 283	0.4 11	0.5 14	1 28		.25 (6,4)				.14 (5,6)				.718 (18,24)			
B1	8 227	20 567	30 850	40 1134	1 28	3 85	6 170		.050 (1,27)				050 (1,27)				—			
BB	8 227	20 567	30 850	40 1134	1 28	3 85	6 170		.050 (1,27)				.050 (1,27)				—			
J0	5 142	20 567	30 850	40 1134	1 28	3 85	6 170		.050 (1,27)				.187 (4,75)				—			
L0	3 85	12 340	18 510	22 624	0.5 14	1 28	2 56.7		.281 (7,14)				. 062 (1,57)				.312 (7,92)			
P0	8 227	20 567	30 850	40 1134	1 28	3 85	6 170		.050 (1,27)				.050 (1,27)				—			
Q0	5 142	20 567	30 850	40 1134	1 28	3 85	6 170		.050 (1,27)				.050 (1,27)				—			
T0	1.5 42.5	4 113	6 170	10 283	0.3 8.5	0.5 14	1 28		.312 (7,92)				.187 (4,75)				312 (7,92)			
W0	3 85	12 340	18 510	22 624	0.5 14	1 28	2 56.7		.281 (7,14)				.062 (1,57)				.718 (18,24)			

NOTE: For basic switch operating forces, see page J-77.

TERMINATIONS

4A .250" QUICK CONNECT

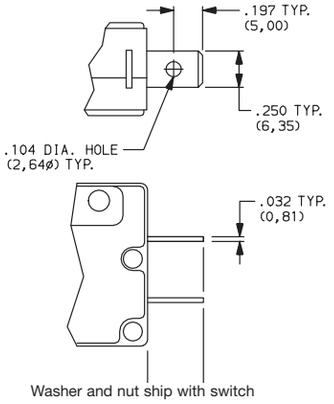

NOTE: Terminals can be supplied at various angles. Other terminal styles can be supplied for special applications. Consult Customer Service Center for special requirements.

CIRCUITRY

C DT (Double Throw, Normally Open & Normally Closed)

W ST N.C. (Single Throw, Normally Closed)

Y ST N.O. (Single Throw, Normally Open)

NOTE: To select number of poles, see NO. POLES section, page J-56

Third Angle Projection

Dimensions are shown: Inches (mm)
Specifications and dimensions subject to change

TL Series
Door Interlock Switches

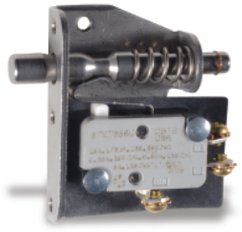

Features/Benefits

- ***Push/pull motion***
- ***Multiple mounting configurations***
- ***Wide variety of termination options***
- ***Ratings up to 15 AMPS***

Typical Applications

- ***Computer enclosures***
- ***Panel builders***
- ***Industrial enclosures***

Specifications

CONTACT RATING: 15 AMPS @ 125 & 250 V AC; 0.25 AMP @ 250 V DC; 0.5 AMP @ 125 V DC; 1/2 HP @ 125 & 250 V AC; 3 AMPS @ 125 V AC "L".

ELECTRICAL LIFE: 150,000 cycles at 15 AMPS @ 250 V AC.

INSULATION RESISTANCE: 1,000 M ohm min.

DIELECTRIC STRENGTH: 1,000 Vrms min. @ sea level.

OPERATING TEMPERATURE: –67°F to 302°F (–55°C to 150°C).

NOTE: Specifications and materials listed above are for switches with standard options. For information on specific and custom switches, consult Customer Service Center.

Materials

SWITCH HOUSING: Thermoplastic or general purpose phenolic (UL 94V-0).

MOUNTING BRACKET: Stainless steel.

PLUNGER: Stainless steel.

ACTUATOR BUTTON: Thermoplastic (UL 94V-0).

SPRING: Copper alloy.

PIVOT: Brass alloy.

MOVABLE CONTACT: Fine silver.

STATIONARY CONTACTS: Fine silver.

TERMINALS: Copper alloy.

Build-A-Switch

To order, simply select desired option from each category and place in the appropriate box. Available options are shown and described on pages J-83 and J-84. For additional options not shown in catalog, consult Customer Service Center.

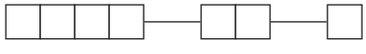

Model
11TL One TM Series SPDT switch
12TL One TM Series SPDT switch
23TL Two TM Series SPDT switches

Terminations
60 Screw
40 .187" Quick connect
4A .250" Quick connect

Plunger
2 Stainless steel, not tapped
4 Stainless steel, tapped

MODEL

11TL WITH SMALL BRACKET

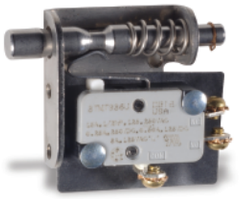

11TL602
SPDT

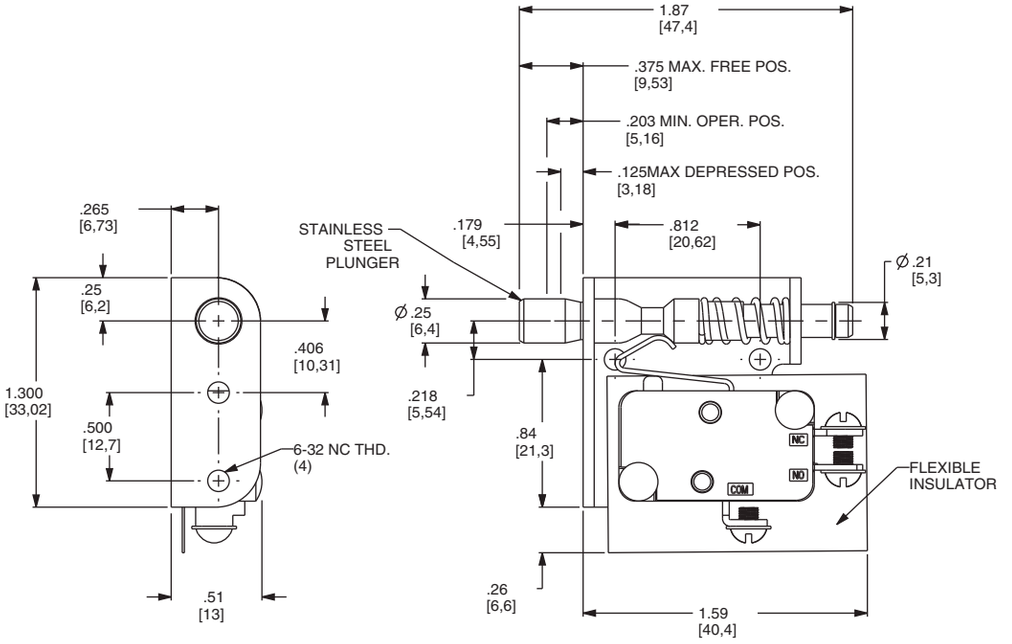

12TL WITH LARGE BRACKET

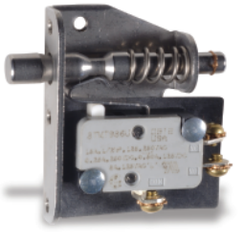

12TL602
SPDT

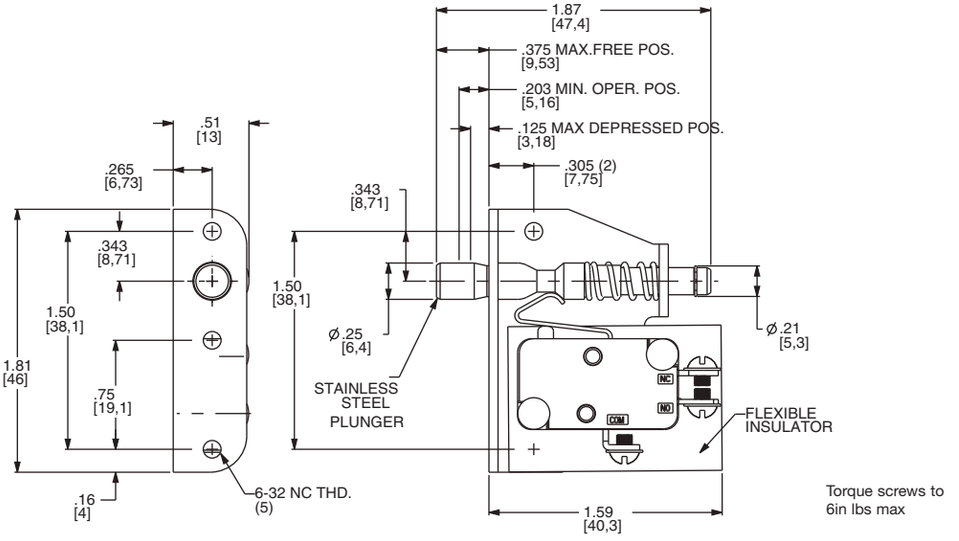

Torque screws to
6in lbs max

Third Angle
Projection

Dimensions are shown: Inches (mm)
Specifications and dimensions subject to change

TL Series
Door Interlock Switches

MODEL

23TL WITH TWO SWITCHES

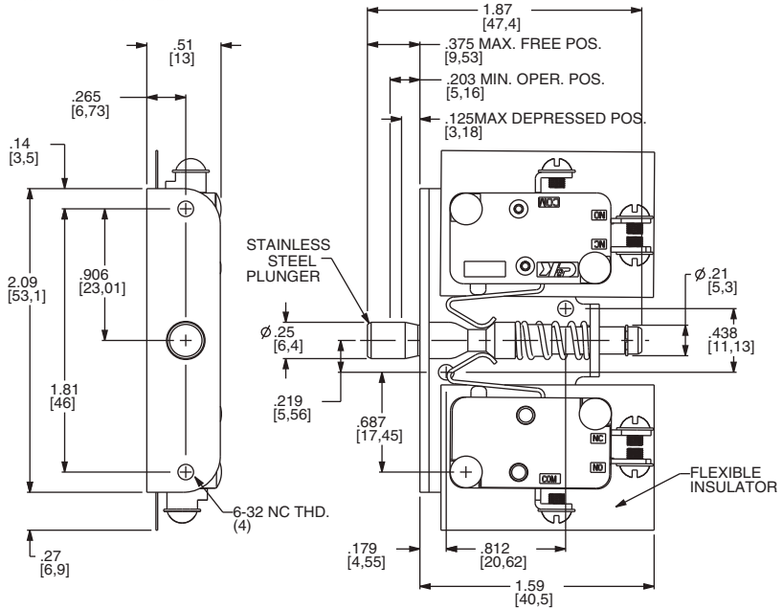

23TL602
SPDT

TERMINATIONS

60 SCREW TERMINALS

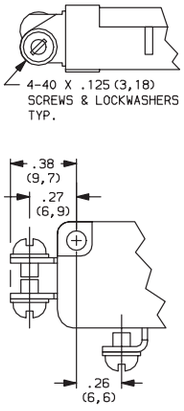

Torque screws to
6in lbs max

40 .187" QUICK CONNECT

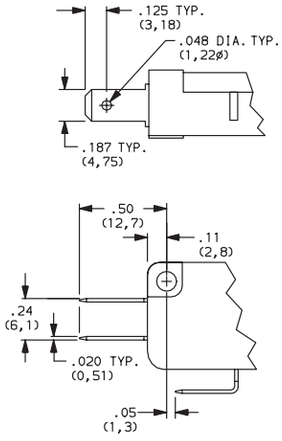

4A .250" QUICK CONNECT

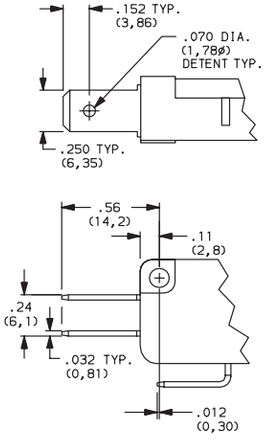

PLUNGERS

2 STAINLESS STEEL, NOT TAPPED

4 STAINLESS STEEL, TAPPED 4-40 x .375 (9,52) min. depth

Third Angle
Projection

Dimensions are shown: Inches (mm)
Specifications and dimensions subject to change

DS Series
Interlock Pushbutton Switches

Features/Benefits

- ***Snap-in mounting***
- ***Reliable snap action mechanism***
- ***Latch or momentary***
- ***RoHS compliant***
- ***Halogen free material***

Typical Applications

- ***Interlock switch***
- ***Detection switch***
- ***Circuit interrupt***

UL61058-1

Specifications

FUNCTION: Single pole double throw / Double pole double throw
MOUNTING TYPE: Snap in style

Electrical

ELECTRICAL LIFE: see ratings chart below
DIELECTRIC STRENGTH: 1500 V (50-60 Hz @ sea level)
INSULATION RESISTANCE: 100 M Ω min.
INITIAL CONTACT RESISTANCE: 30 milli-ohms

Materials

HOUSING, COVER, ACTUATOR, KNOB: PA 66/6 halogen free, UL94V-0
NO & NC FIXED TERMINALS: Copper alloy
COMMON TERMINALS: Copper alloy, silver plate
CONTACTS: Silver alloy / F5 rating gold plated over silver alloy
RETURN SPRINGS: Stainless steel

Operating Environment

OPERATING TEMPERATURE: -40˚C to +85˚C

NOTE: Specifications and materials listed above are for switches with standard options. For information on specific and custom switches, please contact Customer Service.

J

Snap-acting

Build-A-Switch

To order, simply select desired option from each category and place in the appropriate box.

D S — ☐ — ☐☐ — ☐ — ☐☐ — ☐

Designation
DS DS Series

Number of Poles
1 SPDT
2 DPDT

Rating
F5 0.1 (0.5)A @ 125/250 V AC 50/60 Hz 50E3
0.1A G.P. @ 125/250 V AC 50/60 Hz 50E3
F7 0.1 (0.5)A @ 125/250 V AC 50/60 Hz 10E4
0.1A G.P. @ 125/250 V AC 50/60 Hz 10E4
D6 10 (4)A @125/250 V AC 50/60 Hz 50E3
10A G.P. @ 125 / 250 V AC 1/3HP @ 125/250 V AC 50/60 Hz 10E3
D7* 16A G.P. @125/250 V AC 3/4HP 125/250 V AC 50/60 Hz 10E3
16 (6) A @125/250 V AC 50/60 Hz 10E3
* Note - 16A version has Q3 terminals only

Actuator Style
A Momentary, Short button
B Momentary, Long button
C Momentary/Pulled out button (not available on D7 rating)

Terminals
Q1 4.8 x 0.5
Q2 4.8 x 0.8
Q3 6.3 x 0.8

Housing Color
NONE White
B Black

International Rating Symbols

10E3	Cycles 10,000
10E4	Cycles 100,000
50E3	Cycles 50,000
10(4)	Current rating: First number represents resistive rating. Second number represents inductive (motor) rating
GP	General purpose rating UL1054

DS Series
Interlock Pushbutton Switches

NUMBER OF POLES

1 SPDT

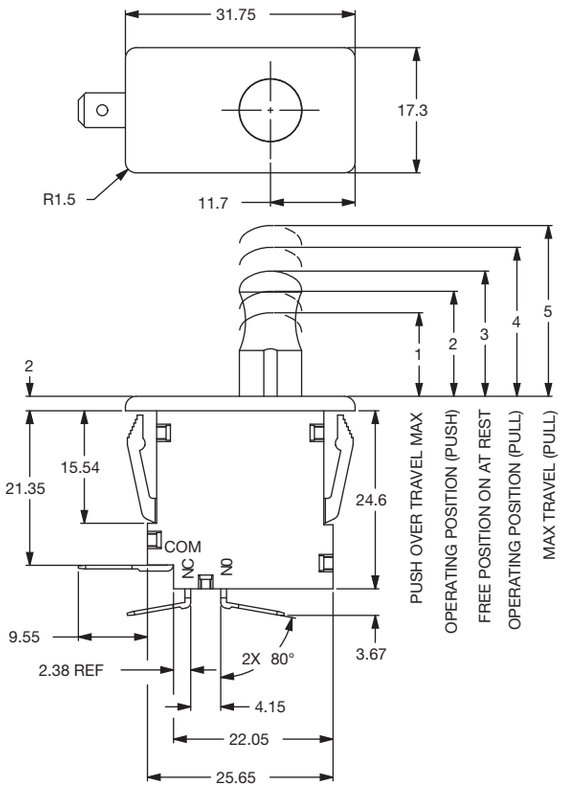

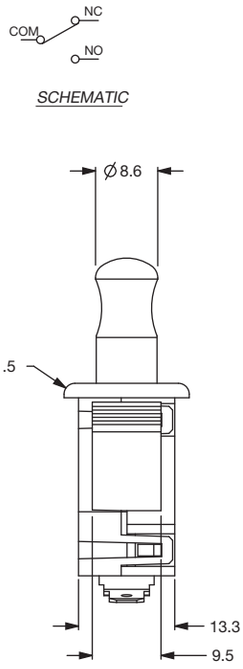

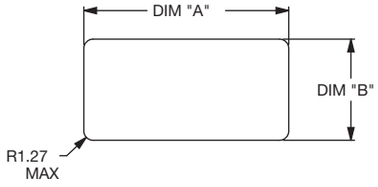

PANEL MOUNTING		
PANEL THICKNESS	DIM "A" mm	DIM "B" mm
1.14	28.32	13.97
2.54	28.58	13.97

2 DPDT

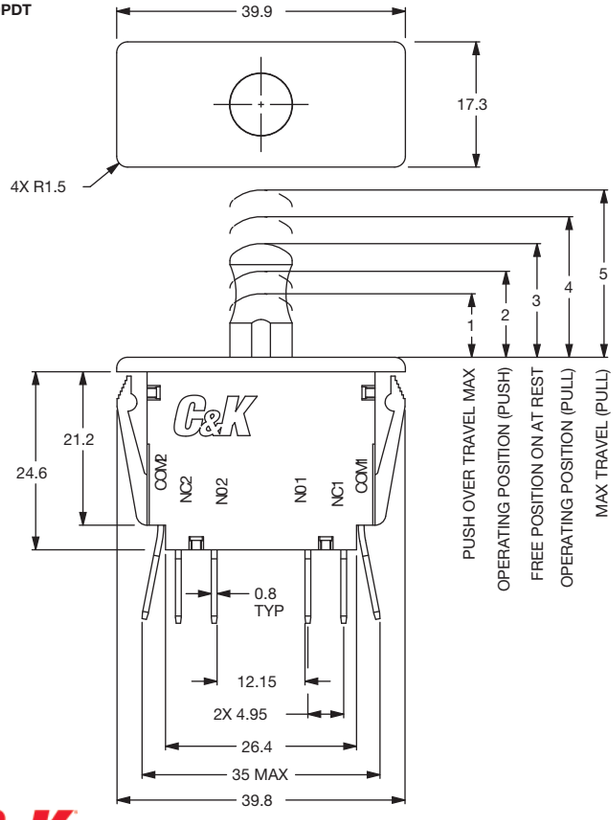

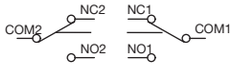

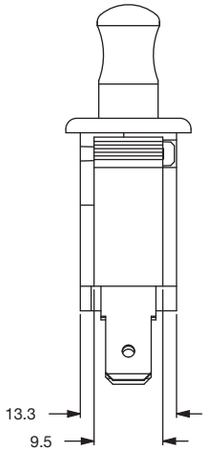

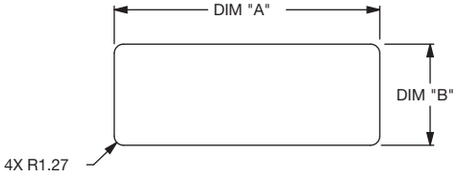

PANEL MOUNTING		
PANEL THICKNESS	DIM "A" mm	DIM "B" mm
1.14	36.70	13.97
2.54	36.96	13.97

Third Angle Projection

Dimensions are shown: mm
Specifications and dimensions subject to change

ACTUATOR STYLE / SPECIFICATIONS

A SHORT BUTTON

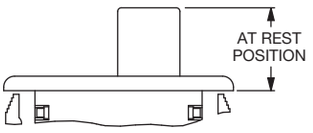

SHORT BUTTON

B LONG BUTTON

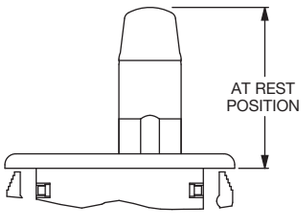

LONG BUTTON

C MOMENTARY/PULLED OUT

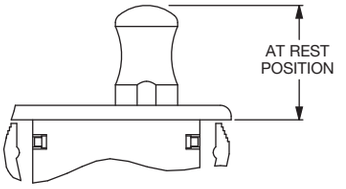

FREE POSITION

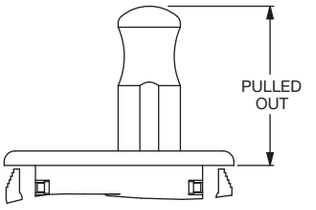

PULLED OUT POSITION

SPDT Specification

BUTTON STYLE	OVER TRAVEL POSITION PUSH MAX	OVER TRAVEL POSITION PULL MAX	OPERATING POSITION PUSH	OPERATING POSITION PULL	FREE POSITION AT REST	OPERATING FORCE	
A	3.20	NA	8.90 ± 1.25	NA	11.45 ± 0.75	425 gf	
B	10.15	NA	19.55 ± 1.25	NA	22.25 ± 0.75	425 gf	
C	13.20	24.90	16.75 ± 1.25	21.60 ± 1.25	19.30 ± 0.75	PUSH 385gf	PULL 475gf

DPDT Specification

BUTTON STYLE	OVER TRAVEL POSITION PUSH MAX	OVER TRAVEL POSITION PULL MAX	OPERATING POSITION PUSH	OPERATING POSITION PULL	FREE POSITION AT REST	OPERATING FORCE	
A	3.20	NA	8.90 ± 1.25	NA	11.45 ± 0.75	680 gf	
B	10.15	NA	19.55 ± 1.25	NA	22.25 ± 0.75	680gf	
C	13.20	24.90	16.75 ± 1.25	21.60 ± 1.25	19.30 ± 0.75	PUSH 560gf	PULL 750gf

TERMINALS

Q1 4.8 x 0.5
Q2 4.8 x 0.8

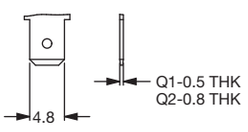

Q3 6.3 x 0.8

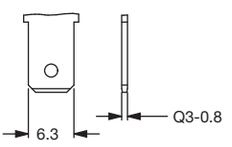

Third Angle Projection

Dimensions are shown: mm
Specifications and dimensions subject to change

Rotary Switches
Product Selection Guide

Rotary							
Series	**A**	**RTA**	**M**	**R**	**F**	**H**	**RW**
Switch Type	Multi-pole/ Multi-position	Multi-pole/ Multi-position	Half-inch	Rota-slide	Rota-slide	Power Rota-slide	Subminiature Rotary SMT
Miniature		•			•		•
Low Profile					•		•
Screwdriver Slot	•	•	•	•	•		
Illumination							
Power						•	
Maximum Current	2.5 Amps	150 mA	6 Amps	5 Amps	4 Amps	12 Amps	0.1 A 10mA
Poles	1-4	1-4	1 & 2	1 & 2	1 & 2	1 & 2	1
Indexing	30º, 45º, 90º	22.5º, 30º 36º	30º & 36º	36º	45º & 90º	45º & 90º	36º & 45º
Splashproof	•		•				
Sealed			• F option				
Non-shorting/ Shorting Contacts	•						
Panel Mount Options							
Front Mount							
Rear Mount	•	•	•	•	•	•	
PCB Mount Options							
Vertical	•	•	•	•	•		•
Terminations							
Solder Lug	•	•	•	•	•	•	
Wire Lead				•	•	•	
Quick Connect						•	
PC	•	•	•	•	•		•
Page No.	K–3	K–8	K–13	K–18	K–21	K–25	K–28

A Series
1-4 Pole Rotary Switches

Features/Benefits

- ***Multi-pole and multi-position***
- ***Positive detent***
- ***Shorting & non-shorting contacts***
- ***Panel and PCB mounting***
- ***RoHS Compliant***

Models Available

Typical Applications

- ***Automotive***
- ***Major and small appliances***
- ***Industrial equipment***

Specifications

CONTACT RATING: Q contact material: Switch - 2.5 AMPS @ 125 V AC; 350 mA @ 125 V DC (UL/CSA). Carry - 5 AMPS continuous. See page K-6 for additional ratings.

ELECTRICAL LIFE: 15,000 make-and-break cycles at full load up to 300,000 detent operations.

CONTACT RESISTANCE: Below 20 m Ω typ. initial @ 2-4 V DC, 100 mA, for both silver and gold plated contacts.

INSULATION RESISTANCE: 10^{9} Ω min.

DIELECTRIC STRENGTH: 1,000 Vrms min. @ sea level. Operating and storage temp: -30° to 85°C

OPERATING & STORAGE TEMPERATURE: -30°C to 85°C

NOTE: Any models supplied with Q, B or G contact material are RoHS compliant.

NOTE: Specifications and materials listed above are for switches with standard options. For information on specific and custom switches, consult Customer Service Center.

Materials

HOUSING & BUSHING: Glass filled 6/6 nylon (UL 94V-0).

ACTUATOR: Glass filled 6/6 nylon (UL 94V-0).

MOVABLE CONTACTS: Q contact material: Coin silver, silver plated. See page K-6 for additional contact materials.

STATIONARY CONTACTS & TERMINALS: Q contact material: Brass, silver plated. See page K-6 for additional contact materials.

HARDWARE: Nut - zinc, nickel plated. Lockwasher — steel, bright zinc plated. Stop Ring - brass, nickel plated.

TERMINAL SEAL: Epoxy.

Build-A-Switch

To order, simply select desired option from each category and place in the appropriate box. Available options are shown and described on pages K–4 through K–7. For additional options not shown in catalog, consult Customer Service Center.

Switch Function
- **A100** SP, 30° Index, 12 pos. no stops
- **A102** SPDT, 30° Index
- **A103** SP, 30° Index, 3 pos.
- **A104** SP, 30° Index, 4 pos.
- **A105** SP, 30° Index, 5 pos.
- **A106** SP, 30° Index, 6 pos.
- **A107** SP, 30° Index, 7 pos.
- **A108** SP, 30° Index, 8 pos.
- **A109** SP, 30° Index, 9 pos.
- **A110** SP, 30° Index, 10 pos.
- **A112** SP, 30° Index, 12 pos.
- **A114** SP, 90° Index, 2 pos.
- **A115** SP, 45° Index, 3 pos.
- **A124** SP, 90° Index, 4 pos.
- **A125** SP, 45° Index, 8 pos.
- **A203** DP, 30° Index, 3 pos.
- **A204** DP, 30° Index, 4 pos.
- **A205** DP, 30° Index, 5 pos.
- **A206** DP, 30° Index, 6 pos.
- **A214** DP, 90° Index, 2 pos.
- **A303** 3P, 30° Index, 3 pos.
- **A304** 3P, 30° Index, 4 pos.
- **A402** 4PDT, 30° Index
- **A403** 4P, 30° Index, 3 pos

Actuator
- **15** 1.500" high, flatted
- **03** .375" high, flatted
- **05** .500" high, flatted
- **14** 1.500" high, flatted
- **42** 1.654" high, metric
- **S1** Screwdriver Slot

Mounting Style
- **R** 3/8-32 threaded
- **M** M10 x .75 metric

Shorting/ Non-shorting Contacts
- **N** Non-shorting contacts
- **S** Shorting contacts (Not available with models A114, A124 & A214)

Terminations
- **Z** Solder lug
- **C** PC Thru-hole
- **MC** Modular base

Contact Material
- **Q** Silver
- **B** Gold
- **G** Gold over silver

Seal
- **NONE** No seal
- **E** Epoxy seal
- **F** Splashproof bushing seal
- **K** Epoxy & splashproof bushing seal

Dimensions are shown: Inch (mm)
Specifications and dimensions subject to change

A Series
1-4 Pole Rotary Switches

SWITCH FUNCTION

30° INDEXING			
NO. POLES	MODEL NO.	SWITCH FUNCTION	TERMINALS
SP	A100	12 Position No Stops	A,1-12
	A102	SPDT	A,1,2*
	A103	3 Position	A,1-3*
	A104	4 Position	A,1-4*
	A105	5 Position	A,1-5*
	A106	6 Position	A,1-6*
	A107	7 Position	A,1-7
	A108	8 Position	A,1-8
	A109	9 Position	A,1-9
	A110	10 Position	A,1-10
	A112	12 Position	A,1-12
DP	A203	3 Position	A,C,1-3,7-9
	A204	4 Position	A,C,1-4,7-10
	A205	5 Position	A,C,1-5,7-11
	A206	6 Position	A,C,1-12
3P	A303	3 Position	A,B,C,1-3,5-7 9-11
	A304	4 Position	A,B,C,1-12

SP MODELS SCHEMATIC

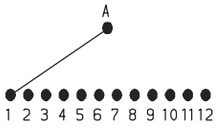

DP MODELS SCHEMATIC

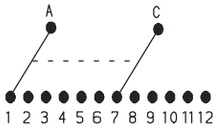

3P MODELS SCHEMATIC

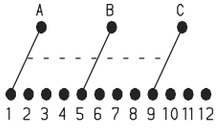

4P MODELS SCHEMATIC

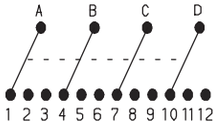

30° INDEXING			
NO. POLES	MODEL NO.	SWITCH FUNCTION	TERMINALS
4P	A402	4PDT	A,B,C,D,1,2,4,5,7, 8,10,11
	A403	3 Position	All Terminals

45° INDEXING			
NO. POLES	MODEL NO.	SWITCH FUNCTION	TERMINALS
SP	A115	3 Position	A,1,2,4*
	A125	8 Position	A,1,2,4,5,7,8,10,11

90° INDEXING			
NO. POLES	MODEL NO.	SWITCH FUNCTION	TERMINALS
SP	A114	2 Position	A,1,4*
	A124	4 Position	A,1,4,7,10
DP	A214	2 Position	A,C,1,4,7,10

NOTE: * These models with 'C' or 'MC' terminations have additional terminal no. 9 as switch support only. This terminal is not connected electrically inside switch.

All models c UL us with all options when ordered with 'G' or 'Q' contact material, see page K-6.

TERMINAL NUMBERS

Terminal numbers molded on bottom of housing.

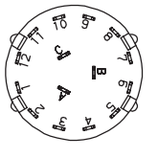

4P MODELS
SP MODELS (omit terminals B, C & D)
DP MODELS (omit terminals B & D)

3P MODELS

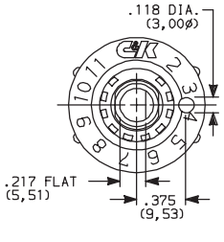

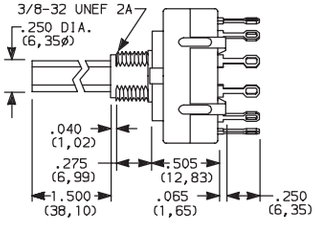

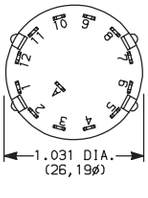

TERM. NOS.
MOLDED ON HOUSING

Third Angle Projection

Dimensions are shown: Inch (mm)
Specifications and dimensions subject to change

ACTUATOR

15 1.500" HIGH

03 .375" HIGH

05 .500" HIGH

14 1.500" HIGH

42 1.654" METRIC

S1 SCREWDRIVER SLOT

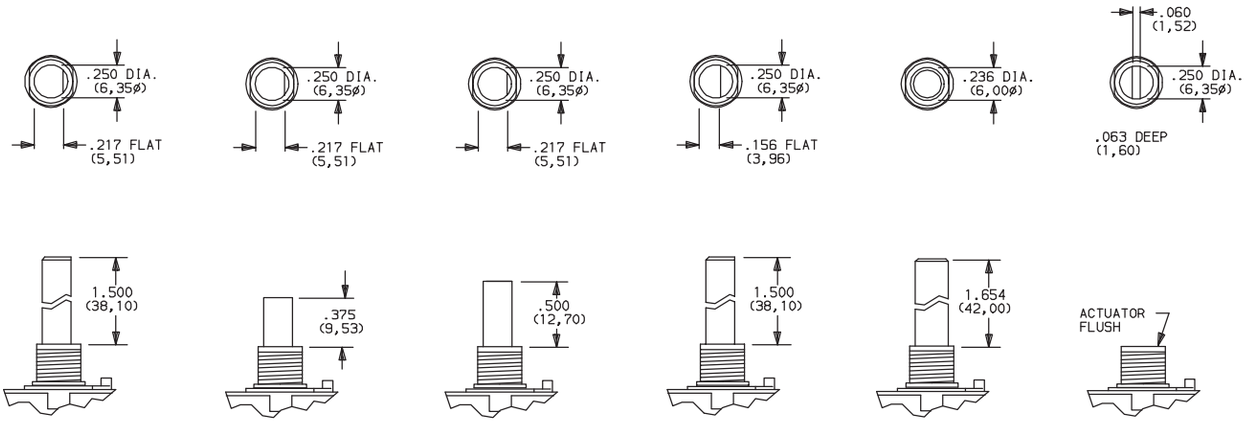

NOTE: Actuators shown in position 1, fully CCW.

MOUNTING STYLE

R 3/8-32 THREAD

M M10 x .75 METRIC

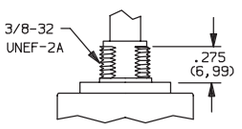

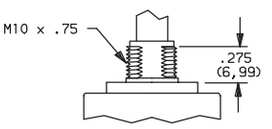

PANEL MOUNTING

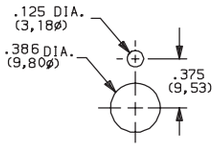

3/8 IN. BUSHING

PANEL MOUNTING

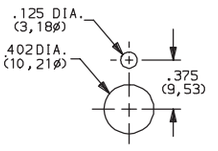

METRIC BUSHING

TYPICAL INSTALLATION

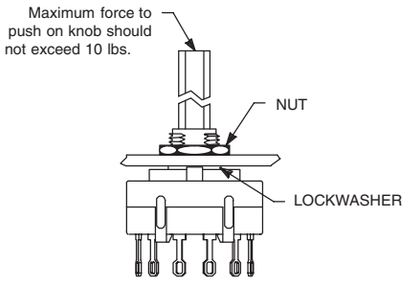

Install switch with stop ring (if used) and lockwasher in back of panel. Tighten hex nut from front of panel.

On PC mounted switches, use hex nut and lockwasher to hold stop ring in place.

Actuation torque: 8–16 oz./in.
Maximum torque: 30 oz./in.

SHORTING/NON-SHORTING CONTACTS

N NON-SHORTING CONTACTS (break-before-make)

S SHORTING CONTACTS (make-before-break)

NOTE: 'S' shorting contacts are not available with A114, A124 and A214 models.

Third Angle Projection

Dimensions are shown: Inch (mm)
Specifications and dimensions subject to change

A Series
1-4 Pole Rotary Switches

TERMINATIONS

Z SOLDER LUG

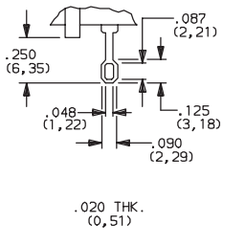

C PC THRU-HOLE

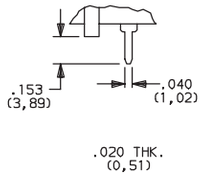

MC MODULAR BASE (for wave soldering)

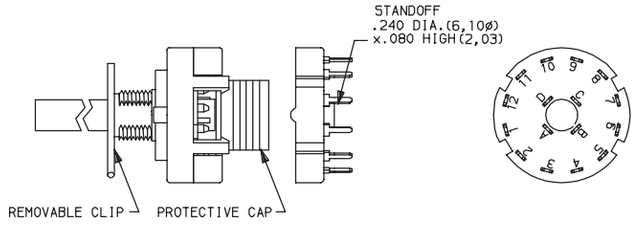

NOTE: Switches with 'C' or 'MC' terminations have additional terminal no. 9 as switch support only. This terminal is not connected electrically inside switch. Solder and clean switch base on PC board with other components, then snap on housing/actuator assembly. See page K-7 for installation instructions.

PC MOUNTING

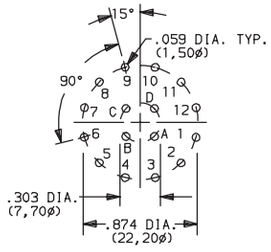

4P MODEL
SP MODEL (omit terminals B, C & D)
DP MODEL (omit terminals B & D)

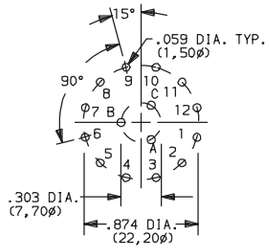

3P MODEL

CONTACT MATERIAL

OPTION CODE	CONTACT AND TERMINAL MATERIAL	RATING	
Q	SILVER [2]	POWER	SWITCH-2.5 AMPS @ 125 V AC; 350 mA @ 125V DC (UL/CSA). CARRY-5 AMPS CONTINUOUS.
B	GOLD [1]	LOW LEVEL/DRY CIRCUIT	0.4 VA MAX. @ 20 V AC or DC MAX
G	GOLD OVER SILVER [3]	LOW LEVEL/DRY CIRCUIT OR POWER	0.4 VA MAX. @ 20 V AC or DC MAX. or SWITCH-2.5 AMPS @ 125 V AC; 350 mA @ 125 V DC (UL/CSA). CARRY-5 AMPS CONTINUOUS.

* Note: See Technical Data section of this catalog for RoHS compliant and compatible definition and specifications.

[1] MOVABLE CONTACTS: Copper alloy, with gold plate over nickel plate.
STATIONARY CONTACTS & TERMINALS: Brass, with gold plate over nickel plate.
[2] MOVABLE CONTACTS: Coin silver, silver plated.
STATIONARY CONTACTS & TERMINALS: Brass, silver plated (standard with all termination options).
[3] MOVABLE CONTACTS: Coin silver, with gold plate over nickel plate over silver plate.
STATIONARY CONTACTS & TERMINALS: Brass, with gold plate over nickel plate over silver plate.

NOTE: Any models supplied with Q, B or G contact material are RoHS compliant.

All models c UL us with all options when ordered with 'G' or 'Q' contact material.

NOTE: 'G' contact material is equivalent to both 'B' and 'Q" contact materials.

Third Angle Projection

Dimensions are shown: Inch (mm)
Specifications and dimensions subject to change

FUNCTION

NONE NO SEAL

E EPOXY SEAL

F SPLASHPROOF BUSHING SEAL

K EPOXY & SPLASHPROOF BUSHING SEAL

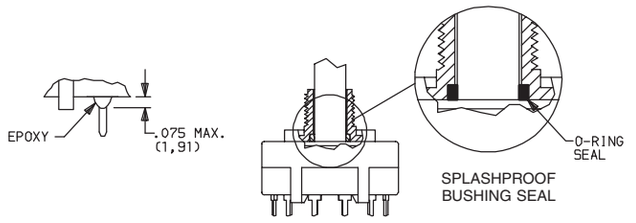

Setting Stops on A112 and A125 Models

The number of switch positions is adjustable on A112 and A125 models only by means of a stop ring provided with each switch. The number of positions is pre-set on all other models and the stop ring is factory installed.

To set stops: Turn shaft fully counter-clockwise and insert stop ring tab in desired hole. Install lockwasher and nut to retain stop ring for both PC and panel mounting. Switch without stop ring has 12 positions.

Soldering, Cleaning and Assembly Instructions for 'MC' Termination Option

Soldering

1. Insert switch base only into PC board.
2. Do not bend terminals.
3. Wave soldering recommended at 500F solder temperature.
4. Hand solder at 500F, 10 sec. max./terminal.

Cleaning

1. Flux clean using vapor degreaser and forced rinse or triple bath method.
2. Do not allow switch base to 'trap' fluids.
3. Freon TMC, TF or Methylene Chloride give excellent results.

Switch Assembly

1. Hold housing/shaft assembly by housing. Remove protective cap by squeezing tabs and discard. (FIG. 1)
2. *Do not push on switch shaft. Detent mechanism will come apart.*
3. While holding switch housing, align locating tab on base with notch on housing and engage 4 housing latches in slots on base. (FIG. 2)
4. Push firmly on housing until latches snap in place.
5. Remove clip from shaft and discard. Assembly is complete. (FIG. 3)

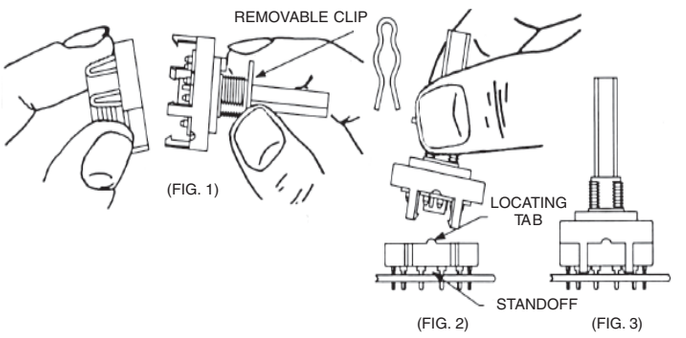

AVAILABLE HARDWARE

Stop ring

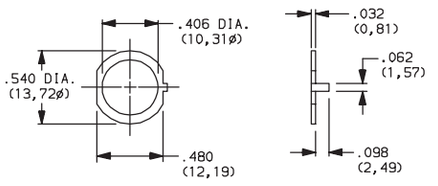

PART NO.
767B00201

Material: Brass
Finish: Nickel plated

Third Angle Projection

Dimensions are shown: Inch (mm)
Specifications and dimensions subject to change

RTA Series
1–4 Poles Coded Rotary Switches

Features/Benefits

- ***PCB or hand soldering versions***
- ***Bushing mounting***
- ***Multiple poles***
- ***Decimal and hexadecimal codes***
- ***Screwdriver slot or extended actuator***
- ***RoHS Compliant***

Typical Applications

- ***Appliances***
- ***Electronic alarm systems***
- ***Medical***
- ***Building automation***
- ***HVAC air conditioning***

Electrical Data

	Silver	Gold
SWITCHING MODE:	BBM	BBM
MAX. SWITCHING POWER	5 VA	0.5 VA
MAX. SWITCHING CURRENT:	150 mA	20 mA
MAX. CARRYING CURRENT:	5 A	1 A
NOMINAL VOLTAGE AT 50 Hz	60 V	25 V
CONTACT RESISTANCE:	< 150 mΩ	< 150 mΩ
DIELECTRIC STRENGTH AT 50 Hz BETWEEN CONTACTS AND GROUND TERMINALS:	500 V r	500 V r
INSULATION RESISTANCE BETWEEN CONTACTS OR CONTACTS AND FRAME (500 V =):	10^9 Ω	10^9 Ω
NO. OF OPERATIONS:	10,000	10,000
BOUNCE:	< 5 ms	< 5 ms

Environmental Data

OPERATING TEMPERATURE:	–20°C to + 70°C	–20°C to + 70°C
STORAGE TEMPERATURE:	–40°C to + 85°C	–40°C to + 85°C

NOTE: Specifications and materials listed above are for switches with standard options. For information on specific and custom switches, consult Customer Service Center.

Mechanical Data

MAX. NO. OF BANKS: 1.

OPERATING TORQUE: 5 Ncm±20%.

END STOP TORQUE: < 60 Ncm.

STOP: With/without or adjustable

MOUNTING: By fixed index 9.5 mm (0.374) of center, for bushing mount only

Materials

BUSHING/HOUSING: PETP Thermoplastic

STATIONARY CONTACTS & TERMINALS: Nickel Plated Brass with additional plating of Gold or Silver.

ROTOR: Gold or Silver plated Brass or PCB.

CODING PLATE: PA thermoplastic

ACTUATOR: Polysulfon thermoplastic

HARDWARE: Stop pin: Aluminum. Ball & Spring: Stainless steel. Washer: PA. Nut: Brass.

Build-A-Switch

To order, simply select desired option from each category and place in the appropriate box. Available options are shown and described on pages K-9 thru K-12. For additional options not shown in catalog, consult Customer Service Center.

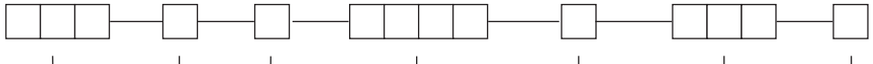

Designation
RTA

Termination
- **P** With PC Thru-hole
- **H** Horizontal with PC Thru-hole

Indexing
- **2** 22.5 index (coded only)
- **3** 30° index (12 positions max.)
- **4** 36° index (10 positions max.)

Switch Function
- **1W12** SP, 30° Index, 12 pos. no stop
- **1W10** SP, 36° Index, 10 pos. no stop
- **1S02** SP, 30° /36° Index, 2 pos.
- **1S03** SP, 30° /36° Index, 3 pos.
- **1S04** SP, 30° /36° Index, 4 pos.
- **1S05** SP, 30° /36° Index, 5 pos.
- **1S06** SP, 30° /36° Index, 6 pos.
- **1S07** SP, 30° /36° Index, 7 pos.
- **1S08** SP, 30° /36° Index, 8 pos.
- **1S09** SP, 30° /36° Index, 9 pos.
- **1S10** SP, 30° /36° Index, 10 pos.
- **1S11** SP, 30° Index, 11 pos.
- **1S12** SP, 30° Index, 12 pos.
- **2S02** DP, 30° /36° Index, 2 pos.
- **2S03** DP, 30° /36° Index, 3 pos.
- **2S04** DP, 30° /36° Index, 4 pos.
- **2S05** DP, 30° /36° Index, 5 pos.
- **2S06** DP, 30° Index, 6 pos.
- **3S02** 3P, 30° /36° Index, 2 pos.
- **3S03** 3P, 30° /36° Index, 3 pos.
- **4S02** 4P, 30° /36° Index, 2 pos.
- **EW10** Direct + complement, 36° Index, no stop
- **EW12** Direct + complement, 30° Index, no stop
- **DW16** Direct, 22.5° Index, no stop
- **ES_ _** Direct + complement, 30°/36° Index, with stop (specify stop position)
- **DS_ _** Direct, 22.5° Index, with stop (specify stop position)

Mounting Style
- **W** Without bushing
- **R** 3/8-32 Threaded Bushing
- **M** M10x.75 Metric Threaded Bushing
- **A** 3/8-32 Threaded Bushing with Offset Bracket
- **B** M10x.75 Metric Threaded Bushing with Offset Bracket
- **C** 3/8-32 Threaded Bushing with Straight Bracket
- **D** M10x.75 Metric Threaded Bushing with Straight Bracket

Actuator (max.)
- **25N** .984 (25,0) with screwdriver slot
- **50N** 1.97 (50,0) with screwdriver slot
- **FLS** Flush shaft with screwdriver slot and position indicator
- **25F** .984 (25,0) Shaft with flat
- **06F** .236 (6,0) Shaft with flat

Contact Material
- **S** Silver plated, matte-tin terminal
- **P** Gold plated, matte-tin terminal

DESIGNATION

RTA

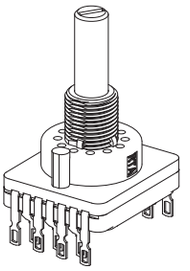

TERMINATION

P WITH PC PINS

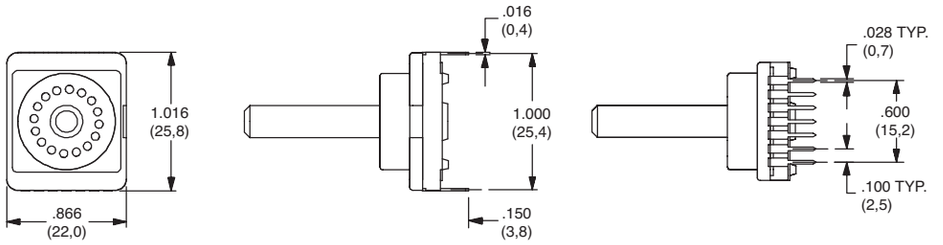

H Horizontal with PC Thru-hole

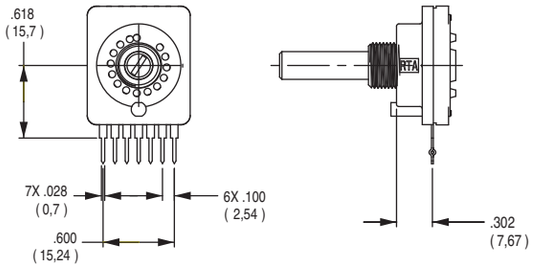

Note: "H" termination only available with the following options:
1. With A or B mounting styles
2. 36° degree indexing
3. Up to 5 positions max

INDEXING

2 22.5 index, 16 positions max.

3 30 index, 12 positions max.

4 36 index, 10 positions max.

Both commons must be connected by user to ground.

Third Angle Projection

Dimensions are shown: Inch (mm)
Specifications and dimensions subject to change

RTA Series
1-4 Poles Coded Rotary Switches

SWITCH FUNCTION

NO. POLES	MODEL NO.	SWITCH FUNCTION	INDEX
SP	1W12	12 Positions No Stop	30°
	1W10	10 Positions No Stop	36°
	1S02	2 Positions	30°/36°
	1S03	3 Positions	30°/36°
	1S05	5 Positions	30°/36°
	1S06	6 Positions	30°/36°
	1S08	8 Positions	30°/36°
	1S09	9 Positions	30°/36°
	1S10	10 Positions	30°/36°
	1S11	11 Positions	30°
	1S12	12 Positions	30°

SP MODELS SCHEMATIC

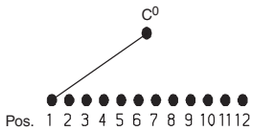

3P MODELS SCHEMATIC

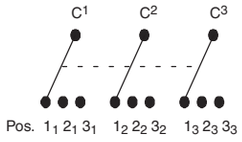

DP MODELS SCHEMATIC

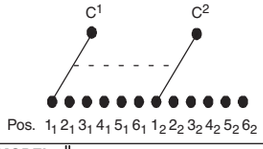

4P MODELS SCHEMATIC

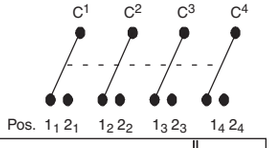

NO. POLES	MODEL NO.	SWITCH FUNCTION	INDEX
DP	2W05	5 Positions No Stop	30°/36°
	2W06	6 Positions No Stop	30°
	2S02	2 Positions	30°/36°
	2S03	3 Positions	30°/36°
	2S04	4 Positions	30°/36°
	2S05	5 Positions	30°/36°
	2S06	6 Positions	30°
3P	3S02	2 Positions	30°/36°
	3S03	3 Positions	30°/36°
4P	4S02	2 Positions	30°/36°

MODEL NO.	SWITCH FUNCTION	INDEX
EW10	Direct + complement, No stop	36°
EW12	Direct + complement, No stop	30°
DW16	Direct, No stop	22.5°
ES__	Direct + complement, with stop (specify stop position)	30° & 36°
DS__	Direct, with stop (specify stop position)	22.5°

22.5° Term.	30° Term.	36° Term.	Pos.	1	2	3	4	5	6	7	8	9	10	11	12	13	14	15	16
E,J	M,N	L,N	C	•	•	•	•	•	•	•	•	•	•	•	•	•	•	•	•
F,I	H	D	1		•		•		•		•		•		•		•		•
D,K	D	B	2			•	•			•	•			•	•			•	•
A,N	A	I	4					•	•	•	•					•	•	•	•
B	J	J	8									•	•	•	•	•	•	•	•
—	C	K	$\overline{1}$	•		•		•		•		•		•		•		•	
—	K	H	$\overline{2}$	•	•			•	•			•	•			•	•		
—	B	A	$\overline{4}$	•	•	•	•					•	•	•	•				
—	I	C	$\overline{8}$	•	•	•	•	•	•	•	•								

Indexing Option Code 2, 22.5 INDEXING ANGLE PCB LAYOUT

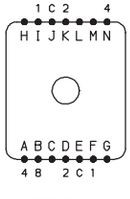

BCD ONLY

Indexing Option Code 3, 30 INDEXING ANGLE PCB LAYOUT

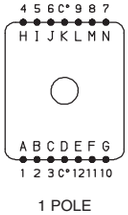

1 POLE

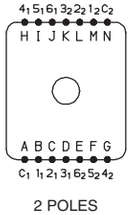

2 POLES

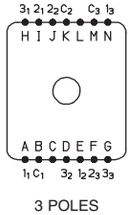

3 POLES

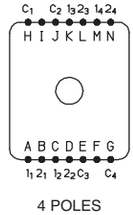

4 POLES

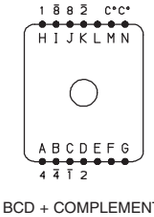

BCD + COMPLEMENTS

Indexing Option Code 4, 36 INDEXING ANGLE PCB LAYOUT

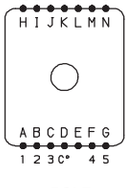

1 POLE

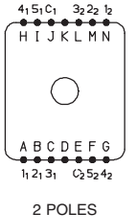

2 POLES

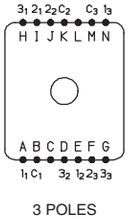

3 POLES

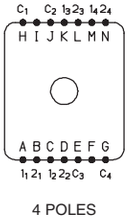

4 POLES

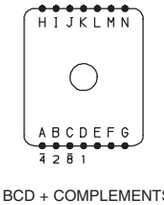

BCD + COMPLEMENTS

NOTE: Layout view from component side.

Common terminals that are in locations A-G are not connected to common terminals that are in locations H-N. For 7-12 position output customer must tie these commons together.

Third Angle Projection

Dimensions are shown: Inch (mm)
Specifications and dimensions subject to change

MOUNTING STYLE

W WITHOUT BUSHING

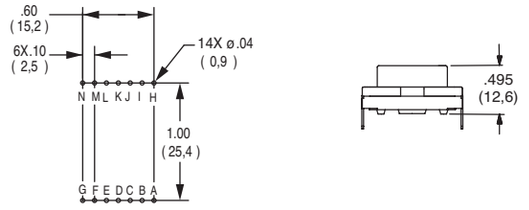

Note: W mounting style not available with H termination.

M M10 x .75 MERTIC THREADED BUSHING

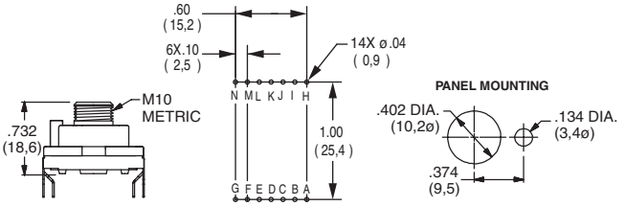

Note: M mounting style not available with H termination.

R 3/8-32 THREADED BUSHING

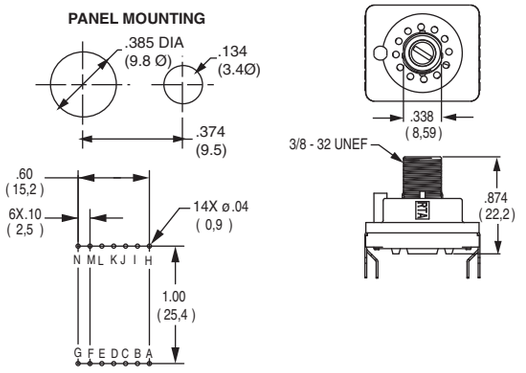

Note: R mounting style not available with H termination.

A 3/8-32 THREADED BUSHING WITH BRACKET

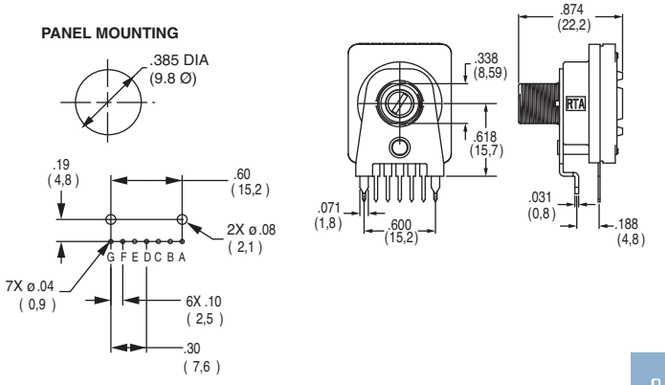

Note: A mounting style only available with H termination.

B M10 x .75 METRIC THREADED BUSHING WITH BRACKET

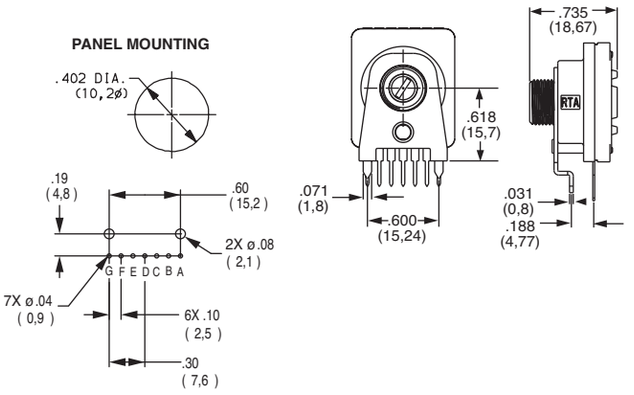

Note: B mounting style only available with H termination.

C 3/8-32 THREADED BUSHING WITH STRAIGHT BRACKET

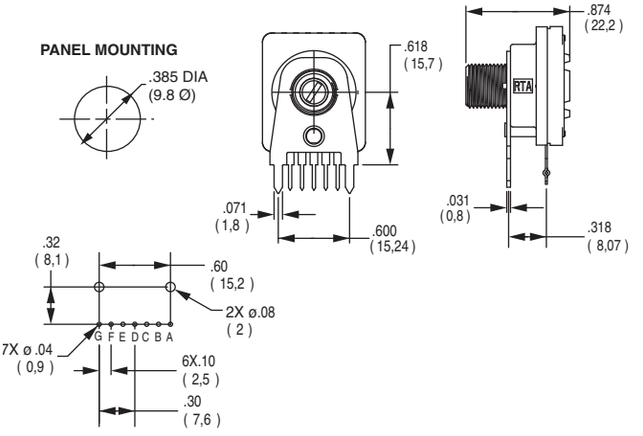

D M10 x .75 METRIC THREADED BUSHING WITH STRAIGHT BRACKET

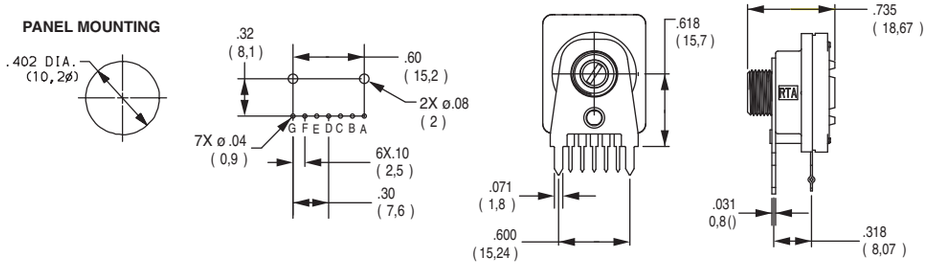

Third Angle Projection

Dimensions are shown: Inch (mm)
Specifications and dimensions subject to change

RTA Series
1-4 Poles Coded Rotary Switches

ACTUATOR

25N .984 (25,0) WITH SCREWDRIVER SLOT

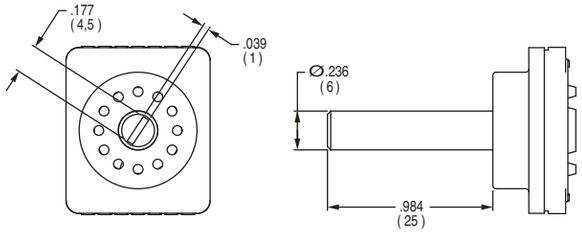

50N 1.97 (50,0) WITH SCREWDRIVER SLOT

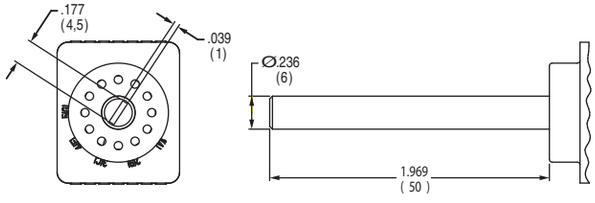

FLS FLUSH SHAFT WITH SCREWDRIVER SLOT AND POSITION INDICATOR

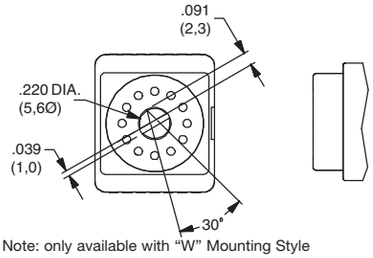

Note: only available with "W" Mounting Style

25F .984 (25,0) SHAFT WITH FLAT

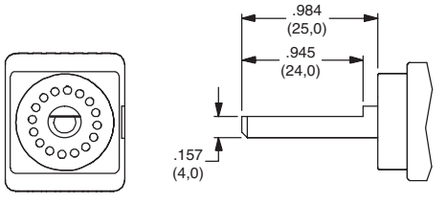

Note: only available with "W" Mounting Style

06F .236 (6,0) SHAFT WITH FLAT

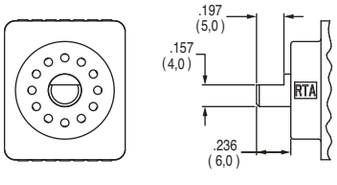

Note: only available with "W" Mounting Style

CONTACT MATERIAL

OPTION CODE	CONTACT AND TERMINAL MATERIAL	RATING	
S	SILVER	LOW LEVEL/DRY CIRCUIT	SWITCH: 150 mA MAXIMUM, 60 V NOMINAL. POWER: 5 VA MAXIMUM. CARRY-5 AMPS MAXIMUM.
P	GOLD	LOW LEVEL/DRY CIRCUIT OR POWER	SWITCH: 20 mA MAXIMUM, 25 V NOMINAL. POWER: 0.5 VA MAXIMUM. CARRY: 1 AMP MAXIMUM.

* Note: See Technical Data section of this catalog for RoHS compliant and compatible definition and specifications.

AVAILABLE HARDWARE

Mounting Nuts

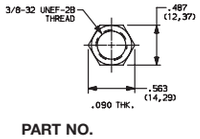

PART NO.
472706201
Standard

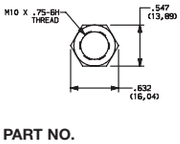

PART NO.
495100201
Metric

Stop pins

PART NO.
Y200300200PCH

Lockwasher

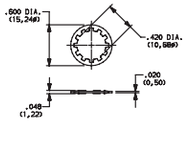

PART NO.
472800202

NOTE: Additional nuts and lockwashers available separately, see section "Technical Data and Additional Hardware".

Third Angle Projection

Dimensions are shown: Inch (mm)
Specifications and dimensions subject to change

M Series
Half-inch Rotary Switches

Features/Benefits

- ***Multi-pole and multi-positions***
- ***Panel and PCB mounting***
- ***Stainless steel actuator***
- ***Non-shorting contacts***
- ***RoHS Compliant***
- ***IP67 (F option only)***

Typical Applications

- ***Test equipment***
- ***Industrial equipment***
- ***Medical equipment***

Models Available

Specifications

CONTACT RATING: Q contact material: Carry-6 AMPS continuous. Switch-250 mA max. @ 125 V AC or 28 DC. Non-shorting contacts standard. See page K-16 for additional ratings.

ELECTRICAL LIFE: 10,000 make-and-break cycles at 150 mA, 125 V AC or 28 DC.

CONTACT RESISTANCE: Below 20 mΩ typ. initial @ 2-4 V DC, 100 mA, for both silver and gold plated contacts.

INSULATION RESISTANCE: 10^{10} Ω min.

DIELECTRIC STRENGTH: 600 Vrms min. @ sea level.

OPERATING & STORAGE TEMPERATURE: –30°C to 85°C.

OPERATING TORQUE: 4-7 ounces-inches typ. initial.

SOLDERABILITY: Per MIL-STD-202F method 208D, or EIA RS-186E method 9 (1 hour steam aging).

NOTE: Specifications and materials listed above are for switches with standard options. For information on specific and custom switches, consult Customer Service Center.

Materials

HOUSING AND BUSHING: Zinc alloy, bright zinc plated, with clear chromate finish.

ACTUATOR: Zinc alloy, nickel plated or stainless steel.

BASE: Diallylphthalate (DAP) or melamine phenolic, with insert molded terminals.

ROTOR: Glass filled polyester (UL 94V-0).

MOVABLE CONTACTS:
Non-shorting: Q contact material: Copper alloy, silver plated. See page K-16 for additional contact materials.

STATIONARY CONTACT & ALL TERMINALS: Q contact material: Copper alloy, silver plated. All terminals insert molded. All terminals present regardless of number of switch positions. See page K-16 for additional contact materials.

CONTACT SPRING: Music wire, phosphate coated.

STOP PIN: Stainless steel.

STOP RING: Brass.

HARDWARE: Nut: Brass, nickel plated; Lockwasher: Steel, nickel plated.

Build-A-Switch

To order, simply select desired option from each category and place in the appropriate box. Available options are shown and described on pages K-14 thru K-17. For additional options not shown in catalog, consult Customer Service Center.

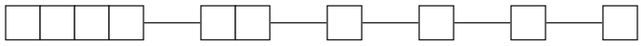

Switch Function

- **MA00** SP, 10 pos., 36°
- **MA02** SP, 2 pos., 36°
- **MA03** SP, 3 pos., 36°
- **MA04** SP, 4 pos., 36°
- **MA05** SP, 5 pos., 36°
- **MA06** SP, 6 pos., 36°
- **MA10** SP, 10 pos., 36°
- **MB00** DP, 5 pos., 36°
- **MB03** DP, 3 pos., 36°
- **MB04** DP, 4 pos., 36°
- **MB05** DP, 5 pos., 36°
- **MC00** SP, 12 pos., 30°
- **MC03** SP, 3 pos., 30°
- **MC07** SP, 7 pos., 30°
- **MC12** SP, 12 pos., 30°
- **MD00** DP, 6 pos., 30°
- **MD06** DP, 6 pos., 30°
- **ME00** SP, 10 pos., 36°
- **ME04** SP, 4 pos., 36°
- **MF00** DP, 5 pos., 36°
- **MG00** SP, 12 pos., 30°
- **MH00** DP, 6 pos., 30°

Actuator & Bushing

- **L1** .650" long, flatted
- **L2** Screwdriver slot, flush
- **L3** .650" long, round
- **S1** .650" long, flatted
- **S2** Screwdriver slot, flush
- **S3** .650" long, round
- **S6** .785" long, slot

Short/Non-short

- **N** Non-shorting contacts

Terminations

- **Z** Solder lug
- **C** PC Thru-hole

Contact Material

- **Q** Silver
- **G** Gold over silver

Seal

- **D** No seal
- **F** Splashproof shaft & panel seal (IP67)

Dimensions are shown: Inch (mm)
Specifications and dimensions subject to change

M Series
Half-inch Rotary Switches

SWITCH FUNCTION

36° INDEXING			
NO. POLES	MODEL NO. WITH STOP PINS	MODEL NO. WITH STOP RINGS	SWITCH FUNCTION
SP	MA00	ME00	10 Positions No Stops
	MA02	—	2 Positions
	MA03	—	3 Positions
	MA04	ME04	4 Positions
	MA05	—	5 Positions
	MA06	—	6 Positions
	MA10	—	10 Positions
DP	MB00	MF00	5 Positions No Stops
	MB03		3 Positions
	MB04	—	4 Positions
	MB05	—	5 Positions

SP MODELS 36° INDEXING SCHEMATIC

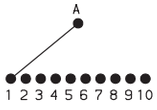

DP MODELS 36° INDEXING SCHEMATIC

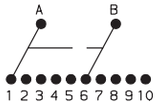

SP MODELS 30° INDEXING SCHEMATIC

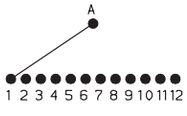

DP MODELS 30° INDEXING SCHEMATIC

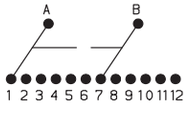

30° INDEXING			
NO. POLES	MODEL NO. WITH STOP PINS	MODEL NO. WITH STOP RINGS	SWITCH FUNCTION
SP	MC00	MG00	12 Positions No Stops
	MC03	—	3 Positions
	MC07	—	7 Positions
	MC12	—	12 Positions
DP	MD00	MH00	6 Positions No Stops
	MD06	—	6 Positions

All models c UL us with all options when ordered with S1-S6 stainless steel actuator options.

NOTE: Number of positions or stops preset at factory (NOTE: MX00 models have full 360 rotation with no stops. Stop pins or stop rings supplied for user-selectable stops, see above). All terminals present regardless of number of switch positions. Hardware is available separately, see section "Technical Data and Additional Hardware".

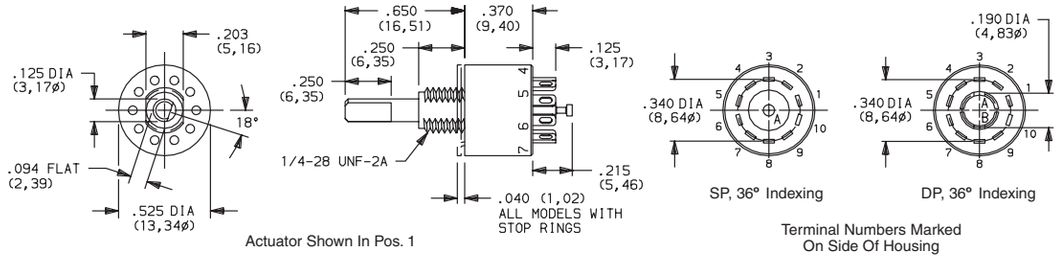

Actuator Shown In Pos. 1

SP, 36° Indexing

DP, 36° Indexing

Terminal Numbers Marked On Side Of Housing

Part number shown: MA00L1NZQD

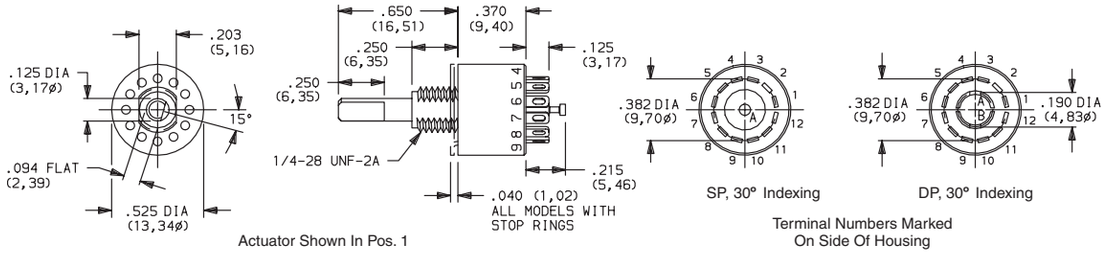

Actuator Shown In Pos. 1

SP, 30° Indexing

DP, 30° Indexing

Terminal Numbers Marked On Side Of Housing

Part number shown: MC00L1NZQD

Third Angle Projection

Dimensions are shown: Inch (mm)
Specifications and dimensions subject to change

ACTUATOR (ZINC ALLOY)

L1 .650" LONG, FLATTED

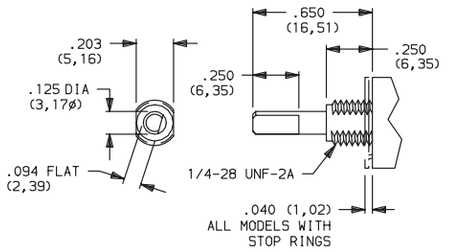

L2 SCREWDRIVER SLOT, FLUSH

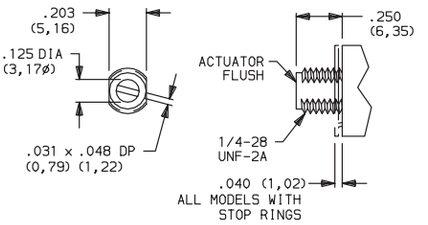

L3 .650" LONG, ROUND

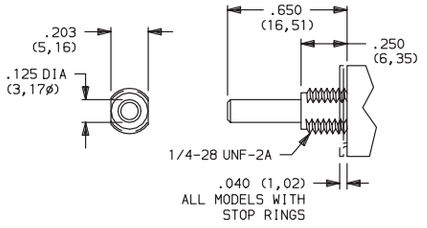

All actuators shown in pos. 1

ACTUATOR (STAINLESS STEEL)

S1 .650" LONG, FLATTED

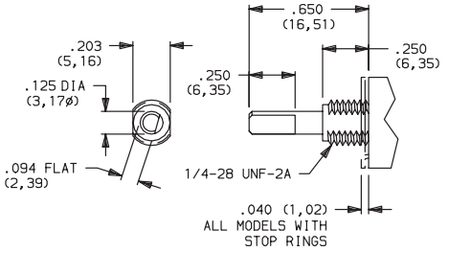

S2 SCREWDRIVER SLOT, FLUSH

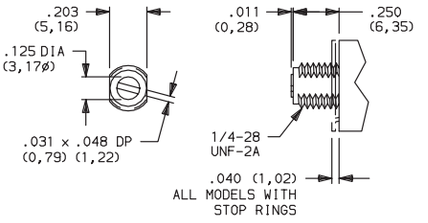

S3 .650" LONG, ROUND

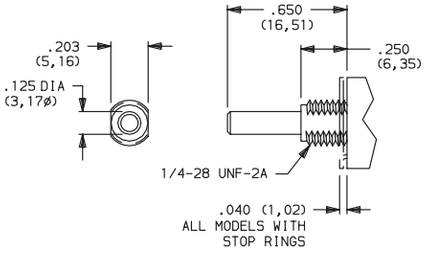

S6 .785" LONG, SLOT

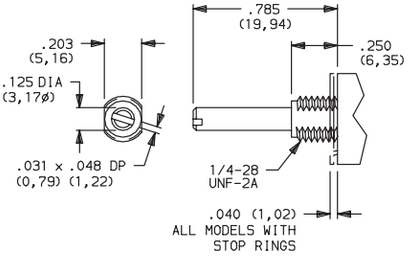

All actuators shown in pos. 1

All models when ordered with stainless steel actuators.

Third Angle Projection

Dimensions are shown: Inch (mm)
Specifications and dimensions subject to change

M Series
Half-inch Rotary Switches

SHORTING/NON-SHORTING CONTACTS

N NON-SHORTING CONTACTS

Break-before-make

TERMINATIONS

Z SOLDER LUG

SP

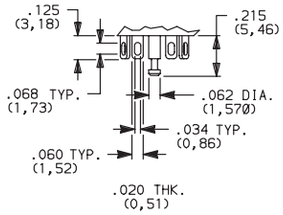

DP

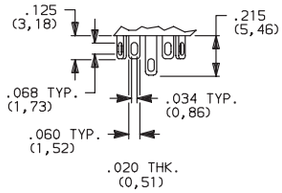

C PC THRU-HOLE

SP

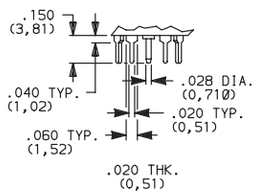

DP

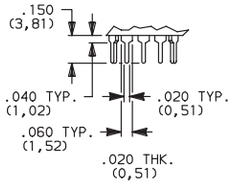

PANEL MOUNTING

WITH FLATS

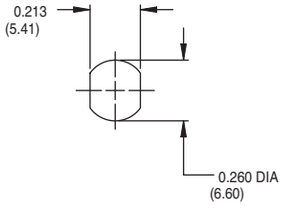

WITHOUT FLATS

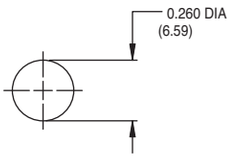

PC MOUNTING
36° INDEXING

SP

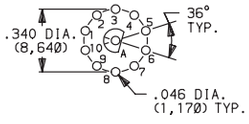

DP

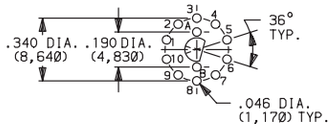

PC MOUNTING
30° INDEXING

SP

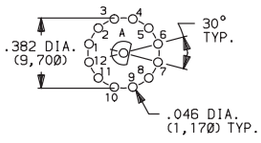

DP

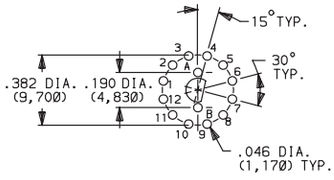

Hardware: All models, one mounting nut and lockwasher supplied standard. MA00 thru MD00 models: two stop pins and adhesive mylar washer supplied. ME00 thru MH00 models: two stop rings supplied. Hardware is available separately, see section "Technical Data and Additional Hardware".

* Will withstand 12 in. - lbs of torque with no distortion.

NOTE: Q contact material standard. Terminal numbers marked on side of housing.
All terminals insert molded. All terminals present regardless of number of switch positions.

Actuators and schematics shown in pos. 1.

CONTACT MATERIAL

OPTION CODE	CONTACT MATERIAL	TERMINAL PLATING	RATING	
Q	SILVER [1, 2]	SILVER [2]	POWER	CARRY: 6 AMPS CONTINUOUS. SWITCH: 250 mA @ 125 V AC or 28 V DC.
G	GOLD OVER SILVER [3, 4]	GOLD [4]	LOW LEVEL/DRY CIRCUIT OR POWER	0.4 VA MAX. @ 20 V AC or DC MAX. or, CARRY: 6 AMPS CONTINUOUS. SWITCH: 250 mA @ 125 V AC or 28 V DC.

* Note: See Technical Data section of this catalog for RoHS compliant and compatible definition and specifications.

[1] MOVABLE CONTACTS: Non-shorting: Copper alloy, silver plated.
[2] STATIONARY CONTACTS & ALL TERMINALS: Copper alloy, silver plated.
[3] MOVABLE CONTACTS: Non-shorting: Copper alloy, with gold plate over nickel plate, over silver plate.
[4] STATIONARY CONTACTS & ALL TERMINALS: Copper alloy, with gold plate over nickel plate over silver plate.

NOTE: Any models supplied with Q, G contact material are RoHS compliant.

All models c UL us when ordered with S1-S6 stainless steel actuator options.

Third Angle Projection

Dimensions are shown: Inch (mm)
Specifications and dimensions subject to change

SEAL

D NO EPOXY SEAL

F SPLASHPROOF SHAFT AND PANEL SEAL
IP67 approved

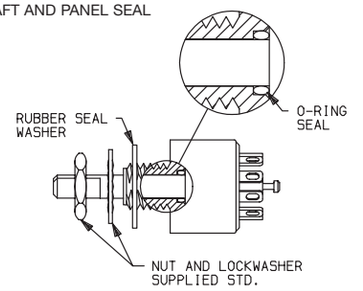

Setting Stops With Stop Pins

MA00, MB00, MC00 & MD00 Models Only:

The number of switch positions or stops are adjustable by means of stop pins provided with each switch. Switches are normally shipped with stop pins and hardware in bulk, not installed. Without stop pins, switches have full 360° rotation and no stops. Note that all two pole models begin to repeat when actuated 180° or more.

To set stops, refer to figures 1 & 2. Orient switch so that terminal no. 1 is as shown. Turn actuator to position 1, using flats on bushing and terminal no. 1 as reference. Install CCW stop pin in hole designated 'X'. Install second stop pin in hole number corresponding to the number of positions desired. Note that two pole models will begin to repeat when actuated 180° or more. To retain stop pins, use adhesive mylar washer included; see figure 3.

All models except MX00 models have number of switch positions or stops pre-set at factory and are not adjustable.

Hardware:

Two stop pins, mounting nut, and lockwasher supplied standard.

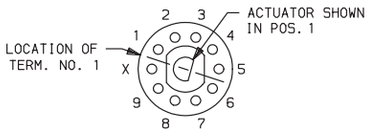

36° Indexing Models
Top View

Fig. 1

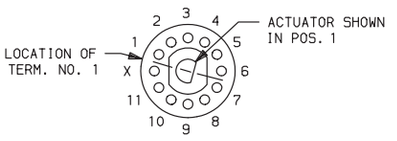

30° Indexing Models
Top View

Fig. 2

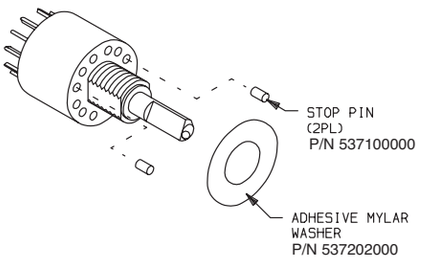

Fig. 3

Setting Stops With Stop Rings

ME00, MF00, MG00 & MH00 Models Only:

The number of switch positions or stops are adjustable by means of stop rings provided with each switch. These models are normally shipped with stop rings and hardware in bulk, not installed. Without stop rings, switches have full 360° rotation and no stops. Note that all two pole models begin to repeat when actuated 180° or more.

To set stops refer to figures 4 & 5. Orient switch so that terminal no. 1 is as shown. Turn actuator to pos. 1 using flats on bushing and terminal no. 1 as reference. See figure 6 and install inner stop ring with short tab in hole designated 'X'. Install outer stop ring with long tab in hole number corresponding to the number of positions desired. Note that all two pole models begin to repeat when actuated 180° or more. Use mounting nut and lockwasher to retain stop rings.

All MEXX, MFXX, MGXX & MHXX Models (Except MX00 models):

Number of switch positions or stops are preset at factory, but are user adjustable.

Hardware:

Two stop rings, mounting nut and lockwasher supplied standard.

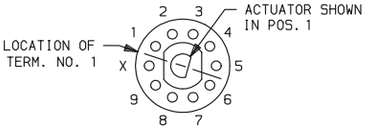

36° Indexing Models
Top View

Fig. 4

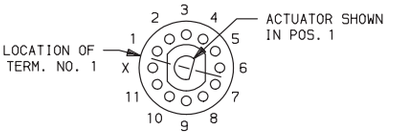

30° Indexing Models
Top View

Fig. 5

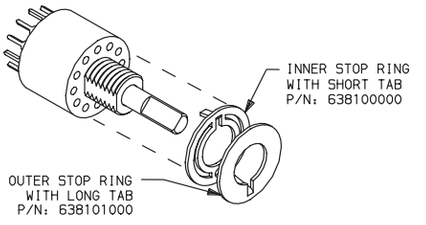

Fig. 6

R Series
ROTA-SLIDE® Rotary Switches

Models Available

Features/Benefits

- *Multi-pole and multi-position*
- *Positive detent*
- *Panel and PCB mounting*
- *Enclosed*
- *RoHS Compliant*

Typical Applications

- *Ceiling fans*
- *Industrial equipment*
- *Portable tools*

Specifications

CONTACT RATING: Q contact material: 5 AMPS @ 125 V AC; 2.5 AMPS @ 250 V AC; 0.5 AMP @ 125 V DC; 1/8 HP @ 125 and 250 VAC (UL/CSA).
See page K-20 for additional ratings.

ELECTRICAL LIFE: 10,000 make-and-break cycles at full load.

CONTACT RESISTANCE: Below 10 m Ω typ. initial @ 2-4 V DC, 100 mA, for both silver and gold plated contacts.

INSULATION RESISTANCE: 10^9 Ω min.

DIELECTRIC STRENGTH: 1,000 Vrms min. @ sea level.

INDEXING: 36°-one contact models, 10 position max.; two contact models, 5 position max.

OPERATING & STORAGE TEMPERATURE: -30°C to 95°C

Materials

HOUSING & BUSHING: 6/6 nylon (UL 94V-2).

ACTUATOR: 6/6 nylon (UL 94V-2).

CONTACTS & TERMINALS: Q contact material: Copper, silver plated.
See page K-20 for additional contact materials.

CONTACT SPRING: Music wire or stainless steel.

MOUNTING NUT: Steel, zinc plated.

TERMINAL SEAL: Epoxy.

NOTE: Any models supplied with Q or B contact material are RoHS compliant.

NOTE: Specifications and materials listed above are for switches with standard options. For information on specific and custom switches, consult Custome Service Center.

Build-A-Switch

To order, simply select desired option from each category and place in the appropriate box. Available options are shown and described on pages K-19 and K-20. For additional options not shown in catalog, consult Customer Service Center.

Switch Function
- **R100** SP, 36° Index, 10 pos. no stops
- **R103** SP, 36° Index, 3 pos.
- **R104** SP, 36° Index, 4 pos.
- **R108** SP, 36° Index, 8 pos.
- **R203** DP, 36° Index, 3 pos.
- **R204** DP, 36° Index, 4 pos.
- **R205** DP, 36° Index, 5 pos.

Actuator
- **07** .500" high with .156" flat
- **05** .375" high with .156" flat
- **15** Screwdriver slot without bushing

Mounting Style
- **RR** 3/8-32 threaded bushing
- **RN** PC without bushing
- **RS** PC without bushing

Terminations
- **03** Solder lug with hole
- **01** Solder lug with notch
- **02** PC Thru-hole
- **WC** Wire Lead

Contact Material
- **Q** Silver
- **B** Gold

Seal
- **NONE** No seal
- **E** Epoxy seal

SWITCH FUNCTION

SP MODELS 36° INDEXING			
NO. POLES	MODEL NO.	SWITCH FUNCTION	TERMINALS
SP	R100	10 Position No Stops	All Terminals
	R103	3 Position	10-1-2-3
	R104	4 Position	10-1-2-3-4
	R108	8 Position	10-1-2-3-4-5-6-7-8

All models c UL us with all options when ordered with 'Q' contact material.

SP MODELS 36° INDEXING SCHEMATIC

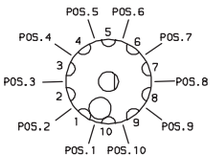

DP MODELS 36° INDEXING SCHEMATIC

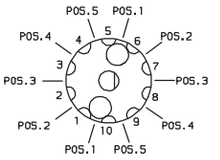

DP MODELS 36° INDEXING			
NO. POLES	MODEL NO.	SWITCH FUNCTION	TERMINALS
DP	R203	3 Position	10-1-2-3,5-6-7-8
	R204	4 Position	All Terminals
	R205	5 Position	All Terminals

NOTE: Break-before-make contacts. Actuators and contacts are shown in position 1. No common terminal is present. Switching function is provided by movable contacts shorting adjacent pairs of stationary contacts.

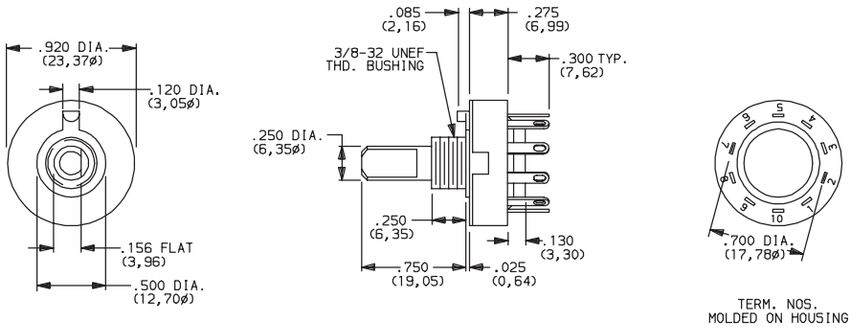

Part number show: R10007RR03Q

ACTUATOR

07 .500" HIGH WITH .156" FLAT

05 .375" HIGH WITH .156" FLAT

15 SCREWDRIVER SLOT

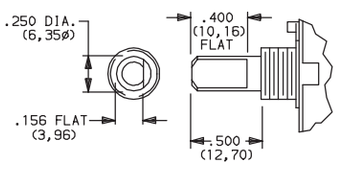

Shown with 'RR' mounting style.
For mounting styles without bushing, add .250 (6,35) to actuator length.

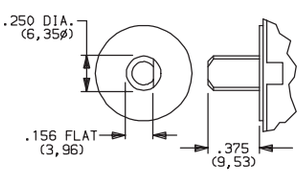

Shown with 'RN' mounting style.

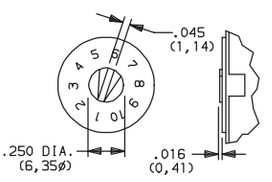

Arrow on actuator marked red (std.).
Shown with 'RS' mounting style.

Third Angle Projection

Dimensions are shown: Inch (mm)
Specifications and dimensions subject to change

R Series
ROTA-SLIDE® Rotary Switches

MOUNTING STYLE

RR 3/8-32 THREADED BUSHING

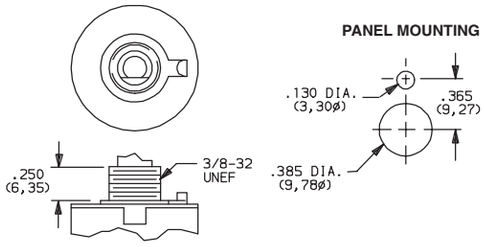

Mounting nut included (part number 175000100).

RN PC WITHOUT BUSHING

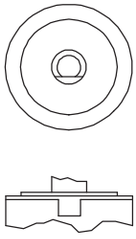

RS PC SCREWDRIVER SLOT WITHOUT BUSHING

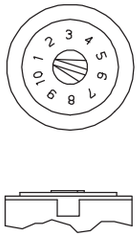

Position numbers and characters are molded on housing.

TERMINATIONS

03 SOLDER LUG WITH HOLE

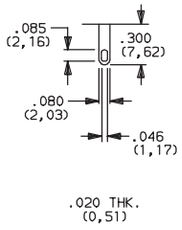

01 SOLDER LUG WITH NOTCH

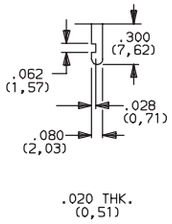

02 PC THRU-HOLE

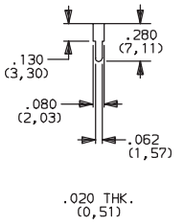

PC MOUNTING

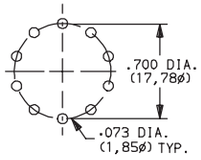

WC WIRE LEAD

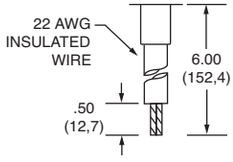

CONTACT MATERIAL

OPTION CODE	CONTACT AND TERMINAL MATERIAL	RATING	
Q	SILVER [2]	POWER	5 AMPS @ 125 V AC; 2.5 AMPS @ 250 V AC; 0.5 AMP @ 125 V DC (UL/CSA); 1/8 HP @ 125 and 250 VAC (UL/CSA).
B	GOLD [1]	LOW LEVEL/DRY CIRCUIT	0.4 VA MAX. @ 20 V AC or DC MAX.

* Note: See Technical Data section of this catalog for RoHS compliant and compatible definition and specifications.

[1] CONTACTS & TERMINALS: Copper, with gold plate over nickel plate.
[2] CONTACTS & TERMINALS: Copper, silver plated. (Standard with all termination options.)

NOTE: Any models supplied with Q, B or G contact material are RoHS compliant.

All models c UL us with all options when ordered with 'Q' contact material.

SEAL

NONE NO SEAL

E EPOXY SEAL

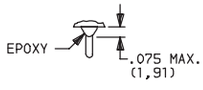

Third Angle Projection

Dimensions are shown: Inch (mm)
Specifications and dimensions subject to change

F Series
Miniature ROTA-SLIDE® Rotary Switches

Features/Benefits

- ***Multi-pole and multi-position***
- ***Panel and PCB mounting***
- ***Positive detent***
- ***Value added capability***
- ***RoHS Compliant***

Typical Applications

- ***Small appliances***
- ***Testing fixtures***
- ***Safety equipment***

Models Available

Specifications

CONTACT RATING: Q contact material: 4 AMPS @ 125 V AC or 28 V DC; 2 AMPS @ 250 V AC (UL/CSA). See page K-24 for additional ratings.

ELECTRICAL LIFE: 10,000 make-and-break cycles at full load.

CONTACT RESISTANCE: Below 10 m Ω typ. initial @ 2-4 V DC, 100 mA, for both silver and gold plated contacts.

INSULATION RESISTANCE: 10^9 Ω min.

DIELECTRIC STRENGTH: 1,000 Vrms min. @ sea level.

INDEXING: 45° or 90° -one contact models; two contact models, 4 pos. max. Models with common terminal -90°, 4 pos. max.

OPERATING & STORAGE TEMPERATURE: -30°C to 65°C

Materials

HOUSING & BUSHING: 6/6 Nylon (UL 94V-2).

ACTUATOR: 6/6 nylon (UL 94V-2).

CONTACTS: Q contact material: Copper, silver plated. See page K-24 for additional contact materials.

TERMINALS: Q contact material: Copper, silver plated. See page K-24 for additional contact materials.

CONTACT SPRING: Music wire or stainless steel.

MOUNTING NUT: Brass, nickel plated.

TERMINAL SEAL: Epoxy.

NOTE: Any models supplied with Q or B contact material are RoHS compliant.

NOTE: Specifications and materials listed above are for switches with standard options. For information on specific and custom switches, consult Custome Service Center.

Build-A-Switch

To order, simply select desired option from each category and place in the appropriate box. Available options are shown and described on pages K-22 thru K-24. For additional options not shown in catalog, consult Customer Service Center.

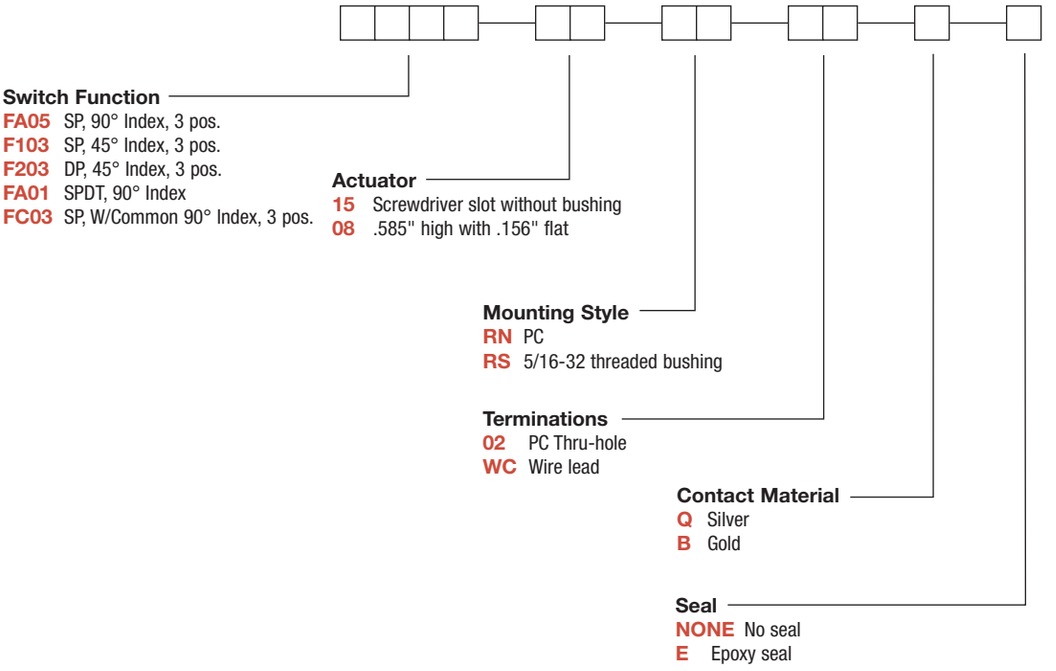

F Series
Miniature ROTA-SLIDE® Rotary Switches

SWITCH FUNCTION

45° INDEXING			
NO. POLES	MODEL NO.	SWITCH FUNCTION	TERMINALS
SP	F103	3 Position	8-1-2-3*
DP	F203	3 Position	All Terminals

45° INDEXING SCHEMATICS

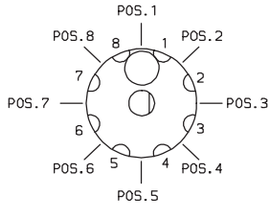

F1XX MODELS

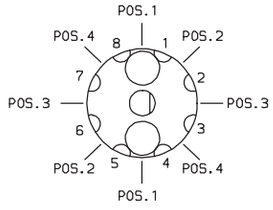

F2XX MODELS

Break-before-make contacts. Terminal numbers are molded on bottom of housing. Actuators are shown in position 1.

F1XX, F2XX models: No common terminal is present. Switching function is provided by movable contacts shorting adjacent pairs of stationary contacts.

NOTE: *Switches with '02' PC terminations have additional terminal no. 5 as switch support only. This terminal is not connected electrically inside switch.

90° INDEXING			
NO. POLES	MODEL NO.	SWITCH FUNCTION	TERMINALS
SP	FA01	SPDT	8-1-3
	FA05	3 Position	8-1-3-5
SP WITH COMMON	FC03	3 Position	C-1,C-2,C-3

90° INDEXING SCHEMATICS

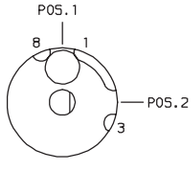

FA01 MODEL

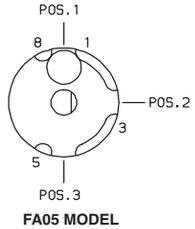

FA05 MODEL

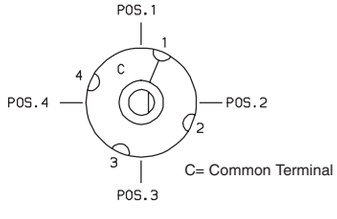

FCXX MODEL

Break-before-make contacts. Terminal numbers are molded on bottom of housing. Actuators are shown in position 1.

FAXX models: No common terminal is present. Switching function is provided by movable contacts shorting adjacent pairs of stationary contacts.

FCXX models: Common terminal is present.

NOTE: *Switches with '02' PC terminations have additional terminal no. 5 as switch support only. This terminal is not connected electrically inside switch.

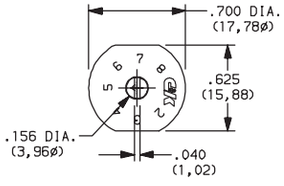

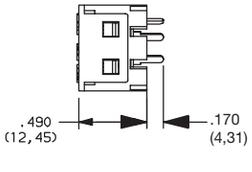

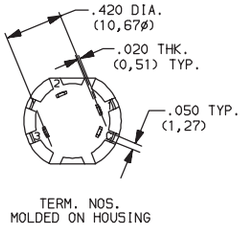

Part number show: FC0315RN02Q

Third Angle Projection

Dimensions are shown: Inch (mm)
Specifications and dimensions subject to change

ACTUATOR

15 SCREWDRIVER SLOT WITHOUT BUSHING

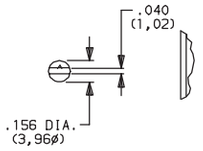

Shown with 'RN' mounting style; not available with 'RS' mounting style or FCXX models.

08 .585" HIGH WITH .156" FLA

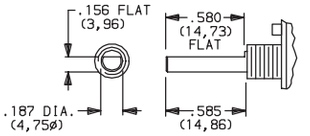

Must be ordered with 'RS' mounting style.

MOUNTING STYLE

RN PC

PC mount, no bushing, position numbers molded standard. Shown with '15' actuator; not available with '08' actuator or FCXX models.

RS 5/16-32 THREADED BUSHING

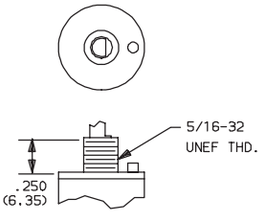

Panel mount, with 5/16 in.–32 threaded bushing. Mounting nut (P/N 175020201) included. Must be ordered with '08' actuator option.

PANEL MOUNTING

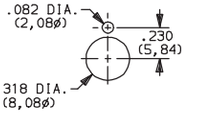

5/16 IN. BUSHING

TERMINATIONS

02 PC THRU-HOLE

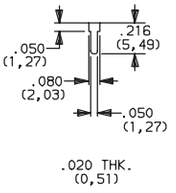

WC WIRE LEAD

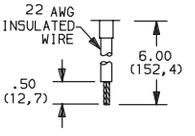

Black wire standard, other colors and lengths available, consult Customer Service Center. UL style 1015.

F1XX, F2XX & FAXX Models

02 PC THRU-HOLE

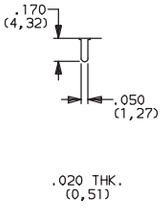

FCXX Models

PC MOUNTING

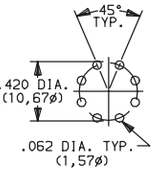

Third Angle Projection

Dimensions are shown: Inch (mm)
Specifications and dimensions subject to change

CONTACT MATERIAL

OPTION CODE	CONTACT AND TERMINAL MATERIAL	RATING	
Q	SILVER [2]	POWER	4 AMPS @ 125 V AC or 28 V DC; 2 AMPS @ 250 V AC (UL/CSA).
B	GOLD [1]	LOW LEVEL/DRY CIRCUIT	0.4 VA MAX. @ 20 V AC or DC MAX.

* Note: See Technical Data section of this catalog for RoHS compliant and compatible definition and specifications.

[1] CONTACTS & TERMINALS: Copper, with gold plate over nickel plate.
[2] CONTACTS & TERMINALS: Copper, silver plated (standard with all termination options).

NOTE: Any models supplied with Q or B contact material are RoHS compliant.

All models with all options when ordered with 'Q' contact material.

SEAL

NONE NO SEAL

E EPOXY SEAL

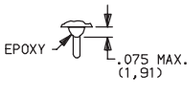

Not available on FCXX models.

Third Angle Projection

Dimensions are shown: Inch (mm)
Specifications and dimensions subject to change

H Series
Power ROTA-SLIDE® Rotary Switches

Features/Benefits

- ***Multi-pole and multi-position***
- ***Positive detent***
- ***Power switching up to 12 AMPS***
- ***Value added capability***
- ***RoHS Compliant***

Typical Applications

- ***Small appliances***
- ***Industrial equipment***
- ***Elevators***

Models Available

Specifications

CONTACT RATING: 12 Amps @ 125 V AC; 6 AMPS @ 250 V AC; 1 AMP @ 125 V DC (UL/CSA).

ELECTRICAL LIFE: 10,000 make-and-break cycles at full load.

INSULATION RESISTANCE: 10^9 Ω min.

DIELECTRIC STRENGTH: 1,000 Vrms min. @ sea level.

INDEXING: 45º-one contact models, 8 positions max.; two contact models, 4 positions max.

OPERATING & STORAGE TEMPERATURE: -30ºC to 95ºC

NOTE: Any models supplied with Q, B or G contact material are RoHS compliant.

NOTE: Specifications and materials listed above are for switches with standard options. For information on specific and custom switches, consult Customer Service Center.

Materials

HOUSING & BUSHING: 6/6 nylon (UL 94V-2).

ACTUATOR: 6/6 nylon (UL 94V-2).

CONTACTS & TERMINALS: Copper, silver plated.

CONTACT SPRING: Music wire or stainless steel.

MOUNTING NUT: Steel, zinc plated.

TERMINAL SEAL: Epoxy.

Build-A-Switch

To order, simply select desired option from each category and place in the appropriate box. Available options are shown and described on pages K-26 thru K-27. For additional options not shown in catalog, consult Customer Service Center.

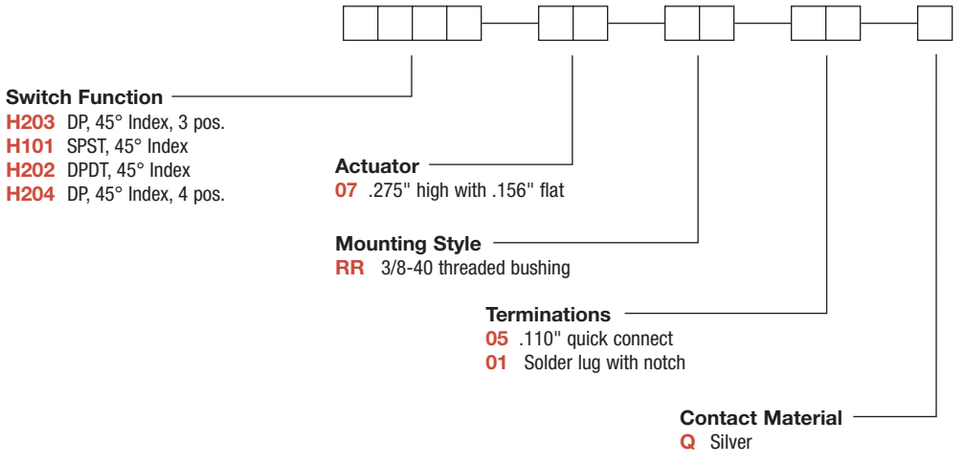

H Series
Power ROTA-SLIDE® Rotary Switches

SWITCH FUNCTION

SP MODELS 45° INDEXING			
NO. POLES	MODEL NO.	SWITCH FUNCTION	TERMINALS
SP	H101	SPST	8-1

DP MODELS 45° INDEXING			
NO. POLES	MODEL NO.	SWITCH FUNCTION	TERMINALS
DP	H202	DPDT	7-8-1, 3-4-5
	H203	3 Position	All Terminals
	H204	4 Position	All Terminals

SP MODELS 45° INDEXING SCHEMATIC

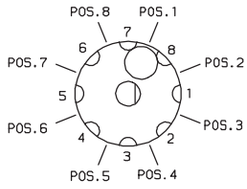

DP MODELS 45° INDEXING SCHEMATIC

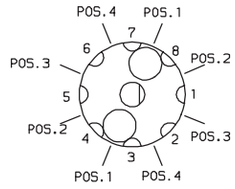

NOTE: Break-before-make contacts. Terminal numbers are molded on bottom of housing. Actuators and contacts are shown in position 1. No common terminal is present. Switching function is provided by movable contacts shorting adjacent pairs of stationary contacts.

All models c UL us with all options.

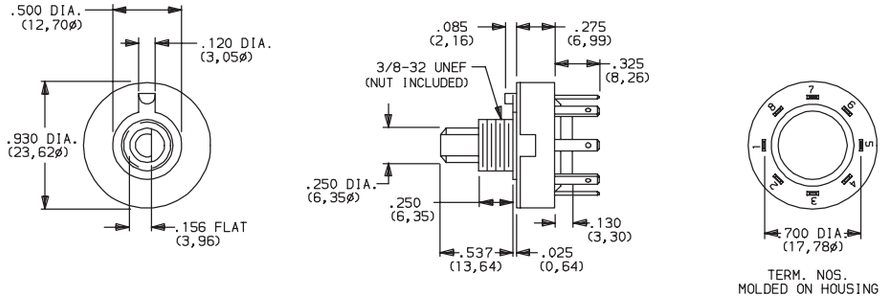

Part number shown: H10107RR05Q

ACTUATOR

07 .275" HIGH WITH .156" FLAT

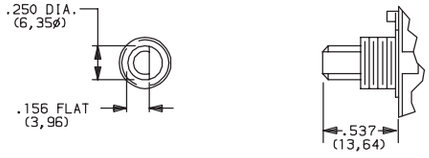

Third Angle Projection

Dimensions are shown: Inch (mm)
Specifications and dimensions subject to change

MOUNTING STYLE

RR 3/8-32 THREADED BUSHING

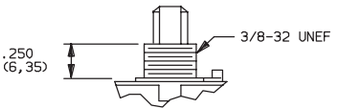

PANEL MOUNTING

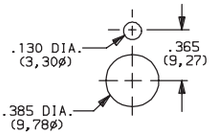

Mounting nut included (part number 925C00000).

TERMINATIONS

05 SOLDER LUG WITH HOLE

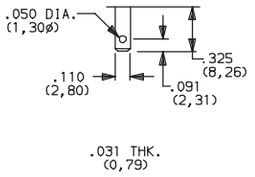

01 SOLDER LUG WITH NOTCH

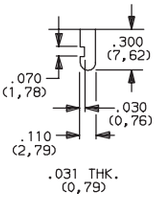

Not available on models with 90° indexing.

CONTACT MATERIAL

OPTION CODE	CONTACT AND TERMINAL MATERIAL	RATING	
Q	SILVER [1]	POWER	12 AMPS @ 125 V AC; 6 AMPS @ 250 V AC; 1 AMP @ 125 V DC.

* Note: See Technical Data section of this catalog for RoHS compliant and compatible definition and specifications.

[1] CONTACTS & TERMINALS: Copper, silver plated.

NOTE: Any models supplied with Q contact material are RoHS compliant.

All models c UL us with all options.

Third Angle Projection

Dimensions are shown: Inch (mm)
Specifications and dimensions subject to change

RW Series
Sub-miniature Rotary Switches

Features/Benefits

- ***8 and 10 positions***
- ***SMT version***
- ***Subminiature design***

Typical Applications

- ***Digital cameras***
- ***Audio & visual equipment***
- ***Consumer electronics***
- ***Selector dial interface***

PART NUMBER	PACKAGING
RW-108 NS RT	800 pieces per reel

Specifications

CONTACT ARRANGEMENT: 1 Pole 8 Position
CONTACT RATING: 0.1 A @ 16 V DC.
ELECTRICAL LIFE: 10,000 cycles.
INITIAL CONTACT RESISTANCE: 100 mΩ max.
INSULATION RESISTANCE: 10M Ω min.
DIELECTRIC STRENGTH: 100V (50-60 Hz).
TWIST FORCE: 150 ± 100 gf
OPERATING TEMPERATURE: -20ºC to 70ºC

Materials

KNOB: PA (UL 94V-0).
COVER: SUS
HOUSING: PA (UL94V-0)
TERMINAL: Silver plated.

NOTE: Specifications and materials listed above are for switches with standard options. For information on specific and custom switches, consult Customer Service Center.

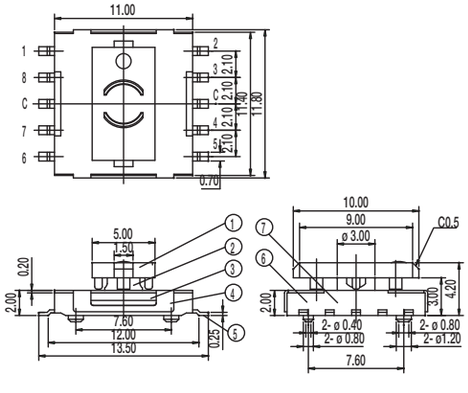

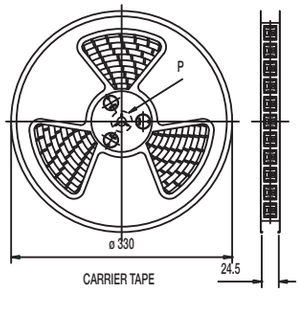

	0°	45°	90°	135°	180°	225°	270°	315°	360°
C-1	ON				OFF				ON
C-2	OFF	ON							OFF
C-3	OFF		ON						OFF
C-4	OFF			ON					OFF
C-5	OFF				ON				OFF
C-6	OFF					ON			OFF
C-7	OFF						ON		OFF
C-8	OFF							ON	OFF

ø°30

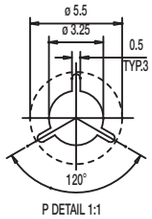

P DETAIL 1:1

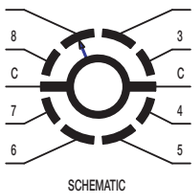

SCHEMATIC

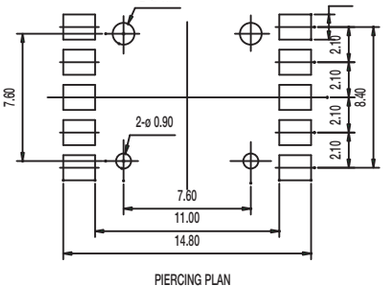

PIERCING PLAN

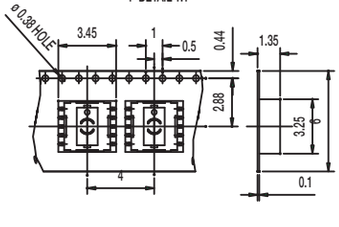

Dimensions are shown: mm
Specifications and dimensions subject to change

PART NUMBER	PACKAGING
RW-1106-NS RT	2,000 pieces per reel

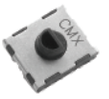

Specifications

CONTACT ARRANGEMENT: 1 Pole, 10 Position
CONTACT RATING: 10 mA @ 5 V DC.
ELECTRICAL LIFE: 7,000 cycles.
INITIAL CONTACT RESISTANCE: 200 mΩ max.
INSULATION RESISTANCE: 250M Ω min.
DIELECTRIC STRENGTH: 250 VAC (50-60 Hz).
TWIST FORCE: 90 ± 15 gf
OPERATING TEMPERATURE: -30ºC to 80ºC

Materials

KNOB: PA (UL 94V-0).
COVER: Silver plated.
HOUSING: LCP (UL94V-0)
TERMINAL: Silver plated.

NOTE: Specifications and materials listed above are for switches with standard options. For information on specific and custom switches, consult Customer Service Center.

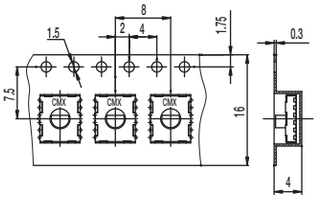

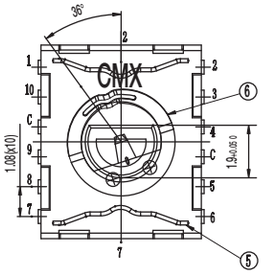

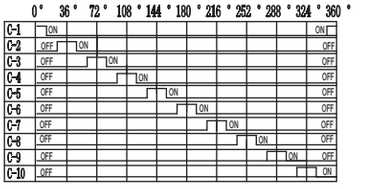

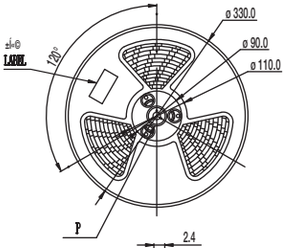

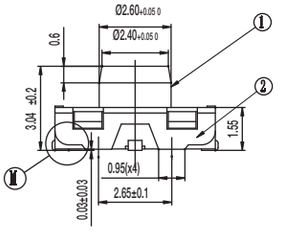

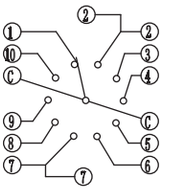

Circuit Diagram

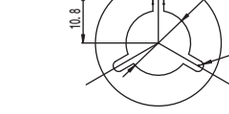

VIEW:P

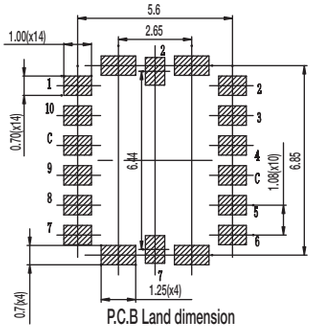

P.C.B Land dimension

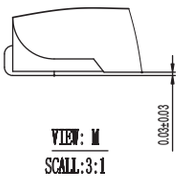

VIEW: M
SCALL:3:1

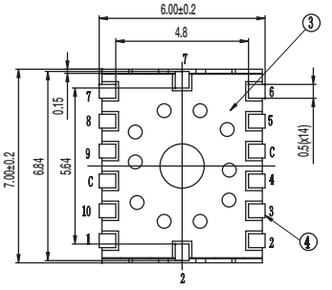

RM Series
Subminiature Rotary Switches

Features/Benefits

- ***Subminiature design saves space***
- ***Screwdriver slot or extended shaft***
- ***Positive detent***
- ***RoHS compliant***

Typical Applications

- ***Audio & visual equipment***
- ***Consumer electronics***
- ***Telecom equipment***

Specifications

CONTACT RATING: 0.5A 24 V DC; 0.2A 48 V DC
OPERATING LIFE: 2,000 cycles
INSULATION RESISTANCE: 100 M Ω min. 500 V DC
DIELECTRIC STRENGTH: 500 V AC for 1 minute
OPERATING FORCE: 270 ± 100 gf cm
OPERATING TEMPERATURE: -40°C to 85°C

Materials

COVER: PA66
BASE: PA6T
ACTUATOR: PA66
CONTACTS & TERMINALS: Brass with gold plate over nickel plate
SPRING: Brass

NOTE: Specifications and materials listed above are for switches with standard options.
For information on specific and custom switches, consult Customer Service Center.

Build-A-Switch

To order, simply select desired option from each category and place in the appropriate box. Available options are shown and described on pages K-30 thru K-32. For additional options not shown in catalog, consult Customer Service Center.

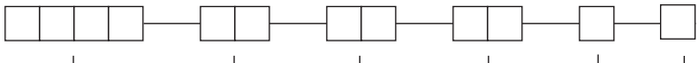

Switch Function
RM100 45° Index, 8 pos. No stops
RM101 45° Index, 1 pos. + Off
RM102 45° Index, 2 pos.
RM103 45° Index, 3 pos.
RM104 45° Index, 4 pos.
RM105 45° Index, 5 pos.
RM106 45° Index, 6 pos.
RM107 45° Index, 7 pos.

Actuator
77 7.7 mm high, flatted, screwdriver slot
00 Flush, screwdriver slot

Actuator Color
2 Black

Torque
B 270 GF * CM

Termination
C PC Thru-hole

Contact Material
B Gold

77 7.7 MM HIGH, FLATTED, SCREWDRIVER SLOT

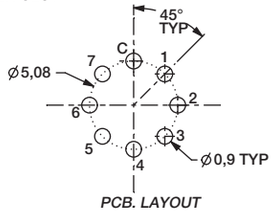

PCB. LAYOUT

EXTENDED ACTUATOR

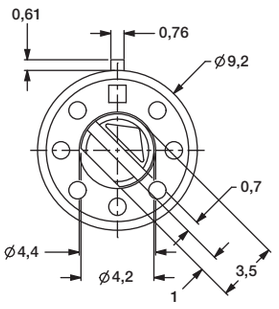

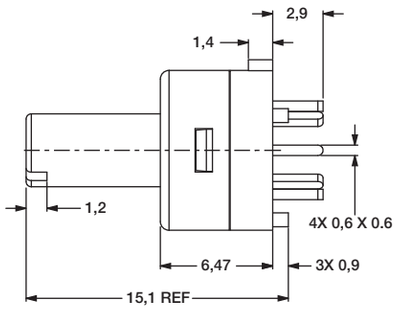

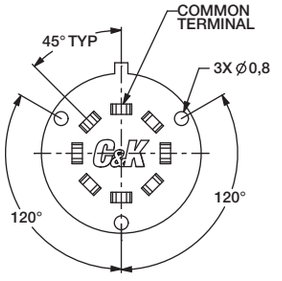

00 FLUSH, SCREWDRIVER SLOT

FLUSH ACTUATOR

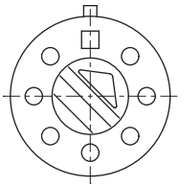

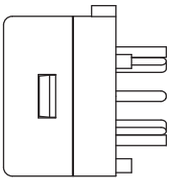

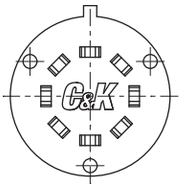

ELECTRICAL SCHEMATIC - RM SERIES SWITCHES								
SWITCH FUNCTION	TRAVEL POSITION 0°	TRAVEL POSITION 45°	TRAVEL POSITION 90°	TRAVEL POSITION 135°	TRAVEL POSITION 180°	TRAVEL POSITION 225°	TRAVEL POSITION 270°	TRAVEL POSITION 315°
RM100	C-C(OFF)	C-1	C-2	C-3	C-4	C-5	C-6	C-7
RM101	C-C(OFF)	X	X	X	X	X	X	C-7
RM102	X	C-1	C-2	X	X	X	X	X
RM103	X	C-1	C-2	C-3	X	X	X	X
RM104	X	C-1	C-2	C-3	C-4	X	X	X
RM105	X	C-1	C-2	C-3	C-4	C-5	X	X
RM106	X	C-1	C-2	C-3	C-4	C-5	C-6	X
RM107	X	C-1	C-2	C-3	C-4	C-5	C-6	C-7

TERMINAL ID NUMBERS ARE SHOWN FOR REFERENCE ONLY AND ARE NOT MARKED ON BOTTOM OF THE SWITCH

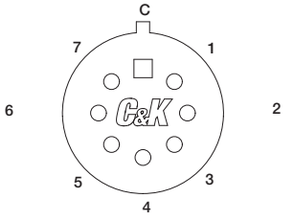

EXTERIOR KEY TAB SHOWN IDENTIFIES "C" (COMMON TERMINAL)

KNOBS

297F02000

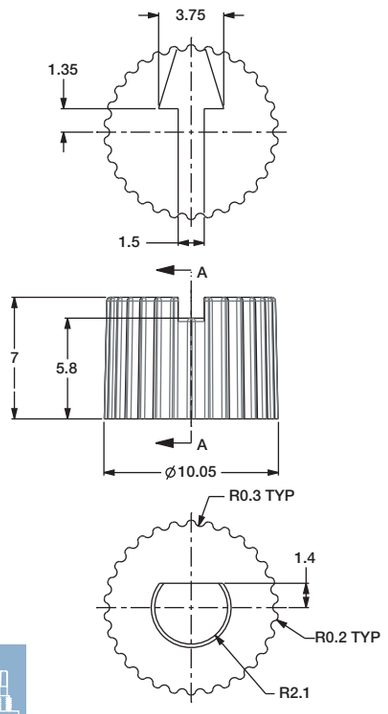

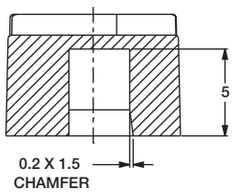

296F02000

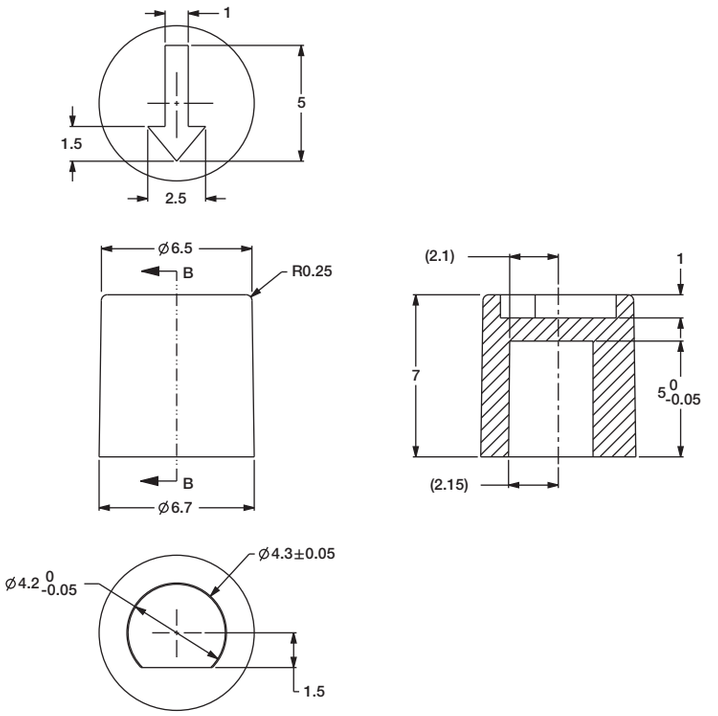

ENC Series
Optical Encoder

Features/Benefits

- ***Clear detent/haptic feel***
- ***Two channel, 2-bit code output***
- ***Quadrature (Incremental type)***
- ***Integrated pushbutton***
- ***Panel mount with screw thread***
- ***Cable and connector termination***

Typical Applications

- ***Automotive interior control***
- ***Industrial equipment***
- ***Test & Instrumentation***
- ***Medical equipment***

Specifications

ROTARY
ELECTRICAL & MECHANICAL
OPERATING VOLTAGE: DC 5 ± 0.25V, 30mA max.
OUTPUT VOLTAGE: Logic high > 3V DC
Logic low < 1V DC
ROTATIONAL TORQUE: 265 gf-cm initially
MECHANICAL LIFE: 300K cycles

PUSHBUTTON
ELECTRICAL & MECHANICAL
OPERATING VOLTAGE: DC 5V, 10mA
INITIAL CONTACT RESISTANCE: 10 ohm max.
ACTUATION FORCE: 600 ± 20% gf
SHAFT TRAVEL: 0.74 ± 0.2mm
CONTACT BOUNCE: < 4ms make, < 10ms break
MECHANICAL LIFE: 300K cycles

Environmental Data

OPERATING TEMPERATURE: -40°C to + 90°C
OPERATING RELATIVE HUMIDITY: <= 96% RH, +40°C
STORAGE TEMPERATURE: -40°C to +90°C

Materials

ACTUATOR: Zinc Alloy
HOUSING FRAME: Zinc Alloy
DETENT ROTOR: POM, HB
DETENT SPRING: SUS
HOUSING UPPER: PA66, V0
HOUSING LOWER: POM, HB
PUSHBUTTON DOME: SUS

Build-A-Switch

Product specifications and technical information listed above are for standard offer on Optical Encoder. For special options and custom request, please contact your sales representative.

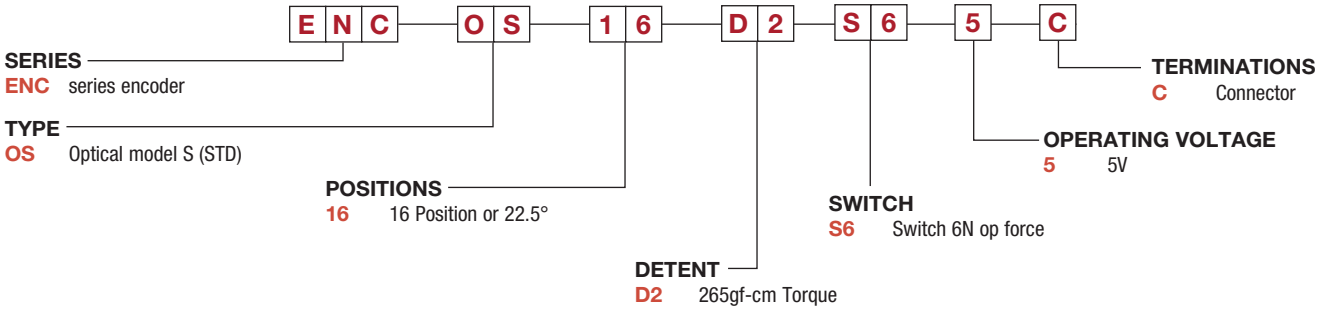

PART NUMBER	PACKAGING
ENCOS16D2S65C	Tray

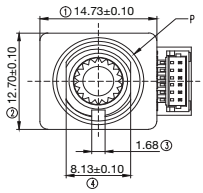

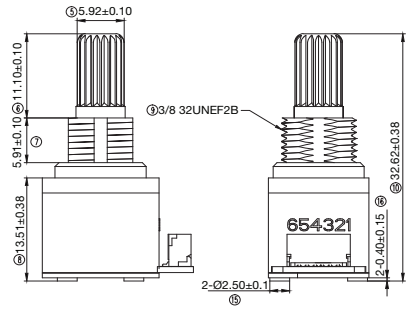

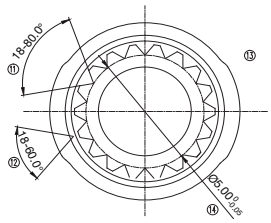

DETAIL:P
3:1

K
Rotary

Third Angle Projection

Dimensions are shown: mm
Specifications and dimensions subject to change

Switchlocks
Product Selection Guide

Switchlock					
Series	**Y**	**YF**	**YM**	**P**	**PF & PM**
Switch Type	4,5,6 Tumbler	4 Tumbler	4 Tumbler	4 Tumbler	5 Tumbler
Lock	Metal	Metal	Metal	Plastic	Plastic
Latch Pawl	•				
Miniature		•	•		•
Anti-static	•				
Momentary	•				
Poles	1 & 2	1 & 2	1	1 & 2	1 & 2
Indexing	45° & 90°	90°	90°	45° & 90°	45° & 90°
Max. Current	4 Amps	4 Amps	4 Amps	4 Amps	4 Amps
Panel Mount Options					
Snap-in				•	•
Bushing	•	•	•		
PC Thru-hole	•				
Page No.	L–3	L–11	L–15	L-18	L–22/L-26

Switchlock			
Series	**A**	**H**	**PL**
Switch Type	4 & 5 Tumbler	4 & 6 Tumbler	5 Tumbler
Lock	Metal	Metal	Plastic
Cam			•
Miniature			•
Anti-static	•		
Momentary			
Poles	1 - 4	1 & 2	N/A
Indexing	30°, 45°, 90°	45° & 90°	90°
Max. Current	2.5 Amps	12 Amps	
Panel Mount Options			
Snap-in			•
Bushing	•	•	
Thru-hole	•		
Page No.	L–29	L–34	L–39

Y Series
4, 5 & 6 Tumbler Switchlocks

Features/Benefits

- ***Anti-static switch—exceeds 20 KV DCstatic resistance***
- ***Momentary models available***
- ***Wire leads and harnesses available***

Typical Applications

- ***Point-of-sale terminals***
- ***Cash registers***
- ***Computers***

Patent No. 4,639,562

Models Available

Specifications

CONTACT RATING: Q contact material: 4 AMPS @ 125 V AC or 28 V DC; 2 AMPS @ 250 V AC (UL/CSA). See page L-9 for additional ratings.

ELECTRICAL LIFE: 10,000 make-and-break cycles at full load.

CONTACT RESISTANCE: Below 10 m Ω typ. initial @ 2-4 V DC, 100 mA, for both silver and gold plated contacts.

INSULATION RESISTANCE: 10^9 Ω min.

DIELECTRIC STRENGTH: 1,000 Vrms min. @ sea level.

INDEXING: 45° or 90°, 2-4 positions (4&5 tumbler switchlocks). 45°, 3 positions; or 90°, 2 positions (6 tumbler tubular switchlocks).
Other functions available, consult Customer Service Center.

STATIC RESISTANCE: Anti-static models exceed 20 KV DC static resistance @ sea level, lock body to terminals.

MOUNTING TORQUE: 10 in./lbs.; 14 in./lbs max.

Materials

LOCK: Zinc alloy with stainless steel facing, std. (4 & 5 tumbler lock and 6 tumbler tubular lock).

KEYS: Two nickel plated brass keys, with code number, std. (4 and 5 tumbler lock). Two die cast chrome plated zinc alloy keys,std. (6 tumbler lock).

SWITCH HOUSING: Glass filled polyester (UL 94V-0).

CONTACTS AND TERMINALS: Q contact material: Copper, silver plated. See page L-9 for additional contact materials.

MOUNTING NUT: Zinc alloy.

MOUNTING CLIP: Steel, zinc plated.

DRESS NUT: Brass, nickel plated.

TERMINAL SEAL: Epoxy.

NOTE: Any models supplied with Q, B or G contact material are RoHS compliant.

NOTE: Specifications and materials listed above are for switchlocks with standard options. For information on specific and custom switchlocks, consult Customer Service Center.

Build-A-Switch

To order, simply select desired option from each category and place in the appropriate box. Available options are shown and described on pages L–4 through L–10. For additional options not shown in catalog, consult Customer Service Center.

Switch and Lock Function

Y10013 SP, 45°, keypull pos. 1
Y1011U SP, 90°, keypull pos. 1 & 2
Y1001U SP, 45°, keypull pos. 1 & 3
Y2001U DP, 45°, keypull pos. 1 & 3
Y10082 SP, 45°, keypull pos. 1
Y20082 DP, 45°, keypull pos. 1
Y100AA SP, 45°, keypull pos. 1, 2 & 3
Y200AA DP, 45°, keypull pos. 1, 2 & 3
Y100AB SP, 45°, keypull pos. 1, 2, 3 & 4
Y200AB DP, 45°, keypull pos. 1, 2, 3 & 4
Y10113 SP, 90°, keypull pos. 1
Y20113 DP, 90°, keypull pos. 1
Y1011C SP, 90°, keypull pos.2
Y2011C DP, 90°, keypull pos. 2
Y2011U DP, 90°, keypull pos. 1 & 2
Y14173 SP, 90°, keypull pos. 1
Y1417U SP, 90°, keypull pos. 1,2 & 3
Y10812 SP, 45°, mom., keypull pos. 1
Y20812 DP, 45°, mom., keypull pos. 1
Y19073 SP w/common, 90°, keypull pos. 1
Y1907U SP w/common, 90°, keypull pos. 1, 2 & 3
Y1900S SP w/common, 90°, keypull pos. 1, 2, 3 & 4

Keying

2 Two nickel plated brass keys (4 & 5 tumbler) or two die cast zinc alloy keys with chrome plating (6 tumbler)
6 Two nickel plated brass keys with code on lock face

Lock Type

A 4 Tumbler lock (YX08 models)
C 4 Tumbler lock with detent
V 6 Tumbler tubular lock
B 5 Tumbler lock
R 4 Tumbler lock with detent and anti-Static switch
W 6 Tumbler tubular lock with anti-Static switch

Lock Finish

2 Stainless steel facing
8 Gloss black facing
F Polished nickel facing

Terminations

03 Solder lug with hole
01 Solder lug with notch
02 PC Thru-hole
07 Solder lug with hole (Y190XX models only)
WC Wire lead

Mounting/Lock Style

N With nut
D With clip
L With removable dress nut and latch pawl
R With removable dress nut

Contact Material

Q Silver
B Gold
G Gold over silver

Seal

NONE No seal
E Epoxy seal

L Switchlock

Dimensions are shown: Inch (mm)
Specifications and dimensions subject to change

Y Series
4, 5 & 6 Tumbler Switchlocks

SWITCH AND LOCK FUNCTION

SINGLE & DOUBLE POLE SWITCHES

NO. TUMBLERS	NO. POLES	MODEL NO.	CONNECTED TERMINALS POS. 1	POS. 2	POS. 3	POS. 4	KEY PULL POSITIONS	LOCK CONFIGURATION	INDEXING
4, 5 & 6	SP	Y10013	8-1	1-2	2-3		Position 1		45°
4, 5 & 6	SP DP	Y1001U Y2001U	8-1 8-1, 4-5	1-2 1-2, 5-6	2-3 2-3, 6-7		Positions 1 & 3		
4 & 5	SP DP	Y10082 Y20082	8-1 8-1, 4-5	1-2 1-2, 5-6	7-8 7-8, 3-4		Position 1		
4	SP DP	Y100AA Y200AA	8-1 8-1, 4-5	1-2 1-2, 5-6	7-8 7-8, 3-4		Positions 1, 2 & 3		
4	SP DP	Y100AB Y200AB	8-1 8-1, 4-5	1-2 1-2, 5-6	2-3 2-3, 6-7	3-4 3-4, 7-8	Positions 1, 2, 3 & 4	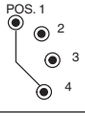	
4, 5 & 6	SP DP	Y10113 Y20113	8-1 8-1, 4-5	1-3 1-3, 5-7			Position 1		90°
4 & 5	SP DP	Y1011C Y2011C	8-1 8-1, 4-5	1-3 1-3, 5-7			Position 2		
4, 5 & 6	SP DP	Y1011U Y2011U	8-1 8-1, 4-5	1-3 1-3, 5-7			Positions 1 & 2		
4	SP	Y14173	7-1	1-3	6-7		Position 1		
4	SP	Y1417U	7-1	1-3	6-7		Positions 1, 2 & 3	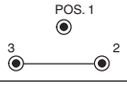	

SINGLE & DOUBLE POLE MOMENTARY SWITCHES

NO. TUMBLERS	NO. POLES	MODEL NO.	CONNECTED TERMINALS POS. 1	POS. 2	POS. 3	POS. 4	KEY PULL POSITIONS	LOCK CONFIGURATION	INDEXING
4	SP DP	Y10812 Y20812	8-1 8-1, 4-5	1-2 1-2, 5-6			Position 1		45° Mom.

LEGEND

- ▲ = Momentary Positions (45°)
- ● = Detent Positions (45° or 90°)
- ◉ = Key pull possible in these positions.
- ◉ = Stop Positions

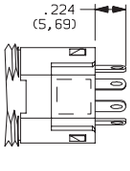

TERMINAL NUMBERS

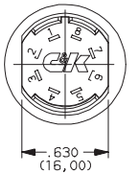

Terminal numbers molded on bottom of housing.

All models cULus with all options when ordered with 'G' or 'Q' contact material.

Third Angle Projection

Dimensions are shown: Inch (mm)
Specifications and dimensions subject to change

SWITCH AND LOCK FUNCTION

SINGLE POLE SWITCHES WITH COMMON									
NO. TUMBLERS	NO. POLES	MODEL NO.	CONNECTED TERMINALS POS. 1	POS. 2	POS. 3	POS. 4	KEY PULL POSITIONS	LOCK CONFIGURATION	INDEXING
4	SP	Y19073	C-1	C-2	C-4		Position 1	POS. 1 / 3 / 2	90°
		Y1907U					Positions 1, 2 & 3	POS. 1 / 3 / 2	
		Y1900S	C-1	C-2	C-3	C-4	Positions 1, 2, 3 & 4	POS. 1 / 4 / 2 / 3	

LEGEND

- ● = Detent Positions (45° or 90°)
- ◉ = Key pull possible in these positions.
- ◉ = Stop Positions

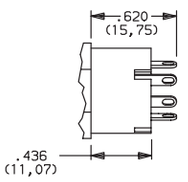

TERMINAL NUMBERS

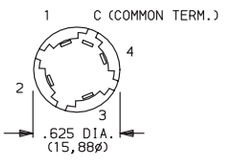

Terminal numbers marked on insulator.

All models c UL us with all options when ordered with 'G' or 'Q' contact material.

NOTE: Epoxy seal not available. Removable dress nut not available with any Y190XX models.

4 & 5 Tumbler

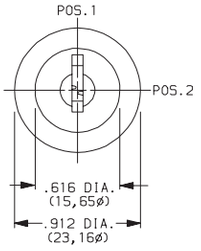

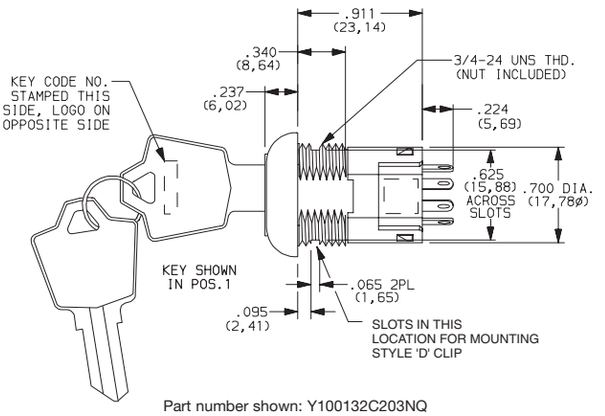

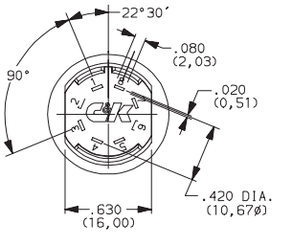

Part number shown: Y100132C203NQ

6 Tumbler

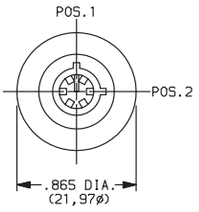

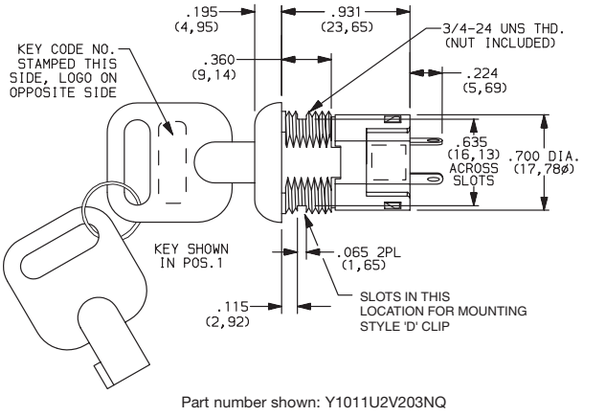

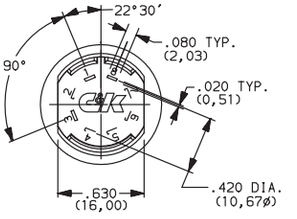

Part number shown: Y1011U2V203NQ

Third Angle Projection

Dimensions are shown: Inch (mm)
Specifications and dimensions subject to change

Y Series
4, 5 & 6 Tumbler Switchlocks

SWITCH AND LOCK FUNCTION

AVAILABLE OPTION COMBINATIONS

MODELS	LOCK TYPES						TERMINATIONS					MOUNTING/LOCK STYLES			
	A	B	C	R	V	W	01	02	03	07	WC	D	L	N	R
YX0013		●	●		●	●	●	●	●		●	●		●	●
YX001U		●	●	●	●	●	●	●	●		●	●	●	●	●
YX0082		●	●	●			●	●	●		●	●		●	
YX00AX			●	●			●	●	●		●	●		●	●
YX0113		●	●	●	●	●	●	●	●		●	●		●	●
YX011C		●	●	●			●	●	●		●	●		●	●
YX01IU		●	●	●	●	●	●	●	●		●	●	●	●	●
Y141XX			●	●			●	●	●		●	●		●	●
YX0812	●						●	●	●		●	●		●	
Y190XX			●	●				●		●	●	●		●	

KEYING

KEYING

OPTION CODE	KEYING OPTIONS	CODE NO. ON KEY	CODE NO. ON LOCK
2	2 NICKEL PLATED BRASS KEYS (4 & 5 TUMBLER) or 2 DIE CAST CHROME PLATED ZINC ALLOY KEYS (6 TUMBLER)	YES	NO
6	2 NICKEL PLATED BRASS KEYS, 4 & 5 TUMBLER ONLY	YES	YES

NOTE: All orders keyed alike, standard. For more than one key code, master keying, replacement keys, or other special features, consult Customer Service Center.

NICKEL PLATED BRASS KEY

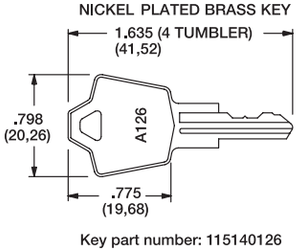

Key part number: 115140126

NICKEL PLATED BRASS KEY

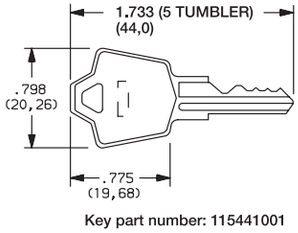

Key part number: 115441001

CHROME PLATED ZINC ALLOY KEY

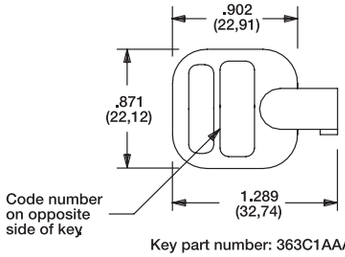

Key part number: 363C1AAAA

NOTE: Keys are available separately, see page L-10. Key head shape subject to change without notice.

LOCK TYPE

C 4 TUMBLER LOCK WITH DETENT

B 5 TUMBLER LOCK

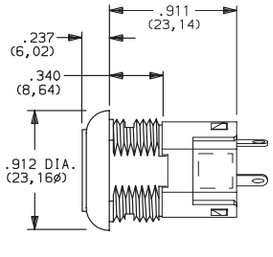

V 6 TUMBLER TUBULAR LOCK

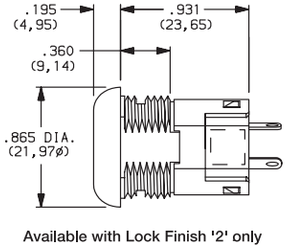

Available with Lock Finish '2' only

A 4 TUMBLER LOCK (MOMENTARY MODELS ONLY)

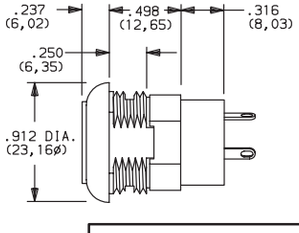

Third Angle Projection

Dimensions are shown: Inch (mm)
Specifications and dimensions subject to change

LOCK TYPE

SHORT ANTI-STATIC LOCK TYPES

R 4 TUMBLER LOCK WITH DETENT AND SHORT ANTI-STATIC SWITCH.

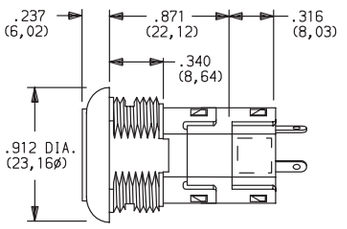

W 6 TUMBLER TUBULAR LOCK WITH ANTI-STATIC SWITCH

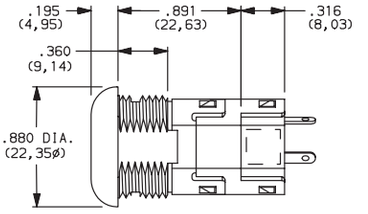

Available with Lock Finish '2' only.

NOTE: For available option combinations, see page L-9.
U.S. Pat. No. 4,639,562 Exceeds 20 KV DC static resistance @ sea level, lock body to terminals.

LOCK FINISH

2 STAINLESS STEEL

Available with Lock Types 'V' & 'W' only.

8 GLOSS BLACK

F POLISHED NICKEL

NOTE: For available option combinations, see page L-9.

TERMINATIONS

03 SOLDER LUG WITH HOLE

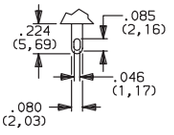

01 SOLDER LUG WITH NOTCH

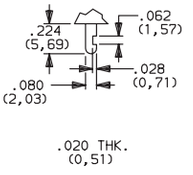

02 PC THRU-HOLE

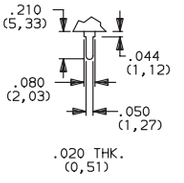

WC WIRE LEAD

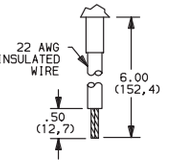

Black wire standard. other colors and lengths available, consult Customer Service Center.
UL style 1015.

All Models Except Y190

02 PC THRU-HOLE

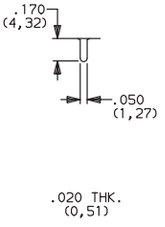

07 SOLDER LUG WITH HOLE

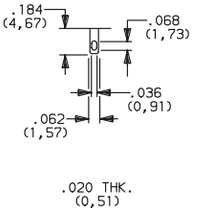

WC WIRE LEAD

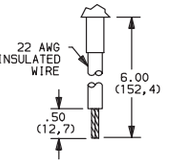

Black wire standard. other colors and lengths available, consult Customer Service Center.
UL style 1015.

Y190 Model Only

PC MOUNTING

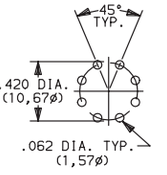

Third Angle Projection

Dimensions are shown: Inch (mm)
Specifications and dimensions subject to change

Y Series
4, 5 & 6 Tumbler Switchlocks

MOUNTING/LOCK STYLE

N WITH NUT

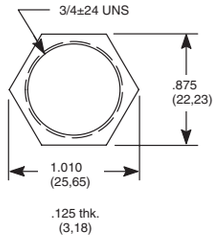

Nut part number: 937C00000

D WITH CLIP

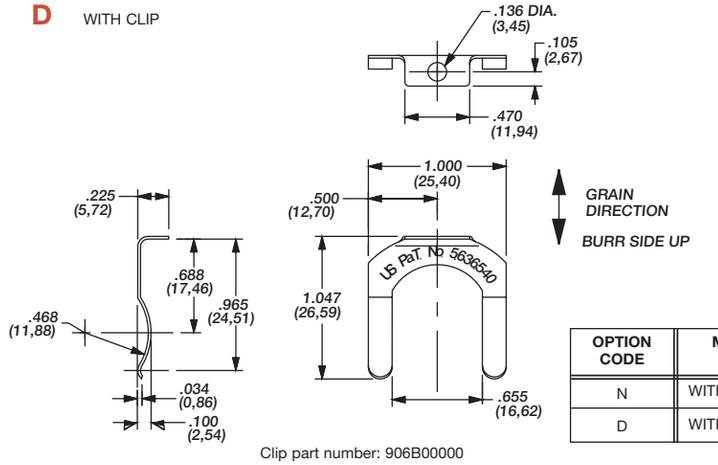

Clip part number: 906B00000

PANEL MOUNTING

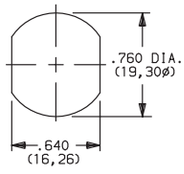

OPTION CODE	MOUNTING STYLE	PANEL THICKNESS
N	WITH NUT	.085-.105 (2,16-2,67)
D	WITH CLIP	.085-.105 (2,16-2,67)

R REMOVABLE DRESS NUT

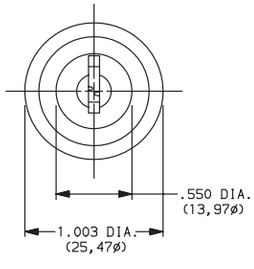

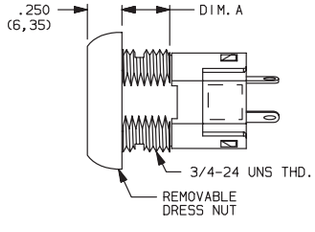

PANEL MOUNTING

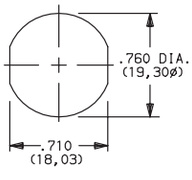

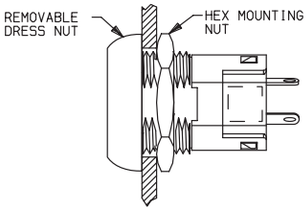

TYPICAL INSTALLATION

Install hex nut with enough clearance to allow for dress nut and panel. Place switch through cutout in rear of panel. Install and tighten dress nut by hand, then tighten hex nut. Always tighten assembly with back of panel hex nut to avoid damaging front of panel.

LOCK DIMENSIONS	
	DIMENSIONS
LOCK TYPES	'A'
A, N	.270 (6,68)
C, R	.360 (9,14)

NOTE: Removable dress nut not available with Y1900A or Y100AA model options.

L REMOVABLE DRESS NUT WITH LATCH PAWL

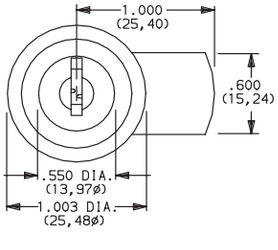

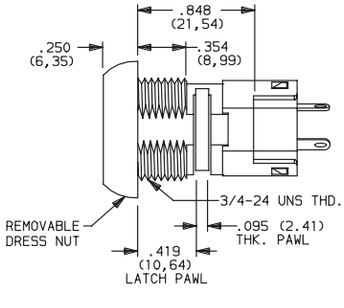

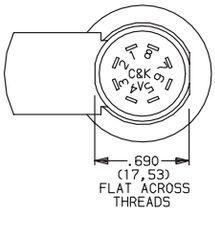

PANEL MOUNTING

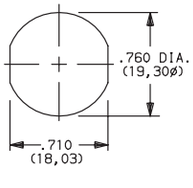

Latch pawl shown in pos. 1.

Third Angle Projection

Dimensions are shown: Inch (mm)
Specifications and dimensions subject to change

MOUNTING/LOCK STYLE

Mounting Information (All Models)

PANEL THICKNESS			
MOUNTING STYLES	A, B LOCK TYPES	C, R LOCK TYPES	V, W LOCK TYPES
D	.065-.085 (1, 65-2, 16)		.085-.105 (2, 16-2, 67)
N	.105 (2, 67) max.	.195 (4, 95) max.	.215 (5, 46) max.
L	.215 (5, 46) max.		–
R	.125 (3, 18) max.	.215 (5, 46) max.	–

AVAILABLE OPTION COMBINATIONS									
MOUNTING STYLES	LOCK FINISHES			LOCK TYPES					
	2	8	F	A	B	C	R	V	W
D	●	●	●	●	●	●	●	●	●
N	●	●	●	●	●	●	●	●	●
R		●	●	●		●	●		
L		●	●			●	●		

CONTACT MATERIAL

OPTION CODE	RoHS COMPLIANT*	RoHS COMPATIBLE*	CONTACT AND TERMINAL MATERIAL	RATING	
Q	YES	YES	SILVER [2]	POWER	4 AMPS @ 125 V AC or 28 V DC; 2 AMPS @ 250 AC V AC (UL/CSA).
B	YES	YES	GOLD [1]	LOW LEVEL/DRY CIRCUIT	0.4 VA MAX. @ 20 V AC or DC MAX
G	YES	YES	GOLD SILVER [3]	LOW LEVEL/DRY CIRCUIT OR POWER	0.4 VA MAX. @ 20 V AC or DC MAX. or 4 AMPS @ 125 V AC or 28 V DC; 2 AMPS @ 250 V AC (UL/CSA)

* Note: See Technical Data section of this catalog for RoHS compliant and compatible definitions and specifications.

[1] CONTACTS & TERMINALS: Copper, with gold plate over nickel plate.
[2] CONTACTS & TERMINALS: Copper, silver plated (std. with all termination options).
[3] CONTACTS & TERMINALS: Copper, with gold plate over silver plate.

All models c UL us with all options when ordered with 'G' or 'Q' contact material.

SEAL

NONE NO SEAL

E EPOXY SEAL

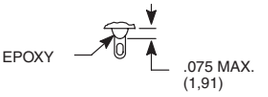

Third Angle Projection

Dimensions are shown: Inch (mm)
Specifications and dimensions subject to change

Y Series
4, 5 & 6 Tumbler Switchlocks

AVAILABLE HARDWARE

Key Code: A126
4 TUMBLER
PART NO. (ONE KEY)
115140126
Material: Brass
Finish: Nickel plate

Key Code: D001
5 TUMBLER
PART NO. (ONE KEY)
115441001
Material: Brass
Finish: Nickel plate

Key Code: AAAA
PART NO. (ONE KEY)
363C1AAAA
Material: Zinc alloy
Finish: Chrome plate

Third Angle Projection

Dimensions are shown: Inch (mm)
Specifications and dimensions subject to change

YF Series
4 Tumbler Miniature Switchlocks

Features/Benefits

- ***Multi-pole and multi-position***
- ***Positive detent***
- ***Low level and power capability***

Typical Applications

- ***Computer servers***
- ***Point-of-sale terminals***
- ***Cash registers***

Models Available

Specifications

CONTACT RATING: Q contact material: 4 AMPS @ 125 V AC or 28 V DC; 2 AMPS @ 250 V AC (UL/CSA). See page L-14 for additional ratings.

ELECTRICAL LIFE: 10,000 make-and-break cycles at full load.

CONTACT RESISTANCE: Below 10 m Ω typ. initial @ 2-4 V DC, 100 mA, for both silver and gold plated contacts.

INSULATION RESISTANCE: 10^9 Ω min.

DIELECTRIC STRENGTH: 1,000 Vrms min. @ sea level.

INDEXING: 90°:2 positions max.

Materials

LOCK: Zinc alloy with stainless steel facing. 4 tumbler, single bitted lock with integral detent mechanism.

KEYS: Two nickel plated brass keys with code number.

SWITCH HOUSING: 6/6 Nylon (UL 94V-2).

CONTACTS & TERMINALS: Q contact material: Copper, silver plated. See page L-14 for additional contact materials.

MOUNTING NUT: Brass, bright zinc plated.

TERMINAL SEAL: Epoxy.

NOTE: Any models supplied with Q or B contact material are RoHS compliant.

NOTE: Specifications and materials listed above are for switchlocks with standard options. For information on specific and custom switchlocks, consult Customer Service Center.

Build-A-Switch

To order, simply select desired option from each category and place in the appropriate box. Available options are shown and described on pages L–12 through L–14. For additional options not shown in catalog, consult Customer Service Center.

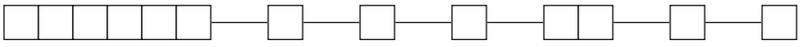

Switch and Lock Function
- **YF0113** SP, 90° Index, keypull pos. 1
- **YF2113** DP, 90° Index, keypull pos. 1
- **YF011U** SP, 90° Index, keypull pos. 1 & 2
- **YF211U** DP, 90° Index, keypull pos. 1 & 2

Keying
- **2** Two nickel plated brass keys

Lock Type
- **C** 4 Tumbler, single bitted lock with detent

Lock Finish
- **2** Stainless steel facing
- **8** Gloss black facing

Terminations
- **03** Solder lug with hole
- **WC** Wire lead

Mounting Style
- **N** With nut

Contact Material
- **Q** Silver
- **B** Gold

YF Series
4 Tumbler Miniature Switchlocks

SWITCH AND LOCK FUNCTION

SINGLE & DOUBLE POLE SWITCHES							
NO. POLES	MODEL NO.	CONNECTED TERMINALS POS. 1	POS. 2	POS. 3	KEY PULL POSITIONS	LOCK CONFIGURATION	INDEXING
SP DP	YF0113 YF2113	8-1 8-1, 4-5	1-3 1-3, 5-7		Position 1	POS. 1 — 2	90°
SP DP	YF011U YF211U	8-1 8-1, 4-5	1-3 1-3, 5-7		Positions 1 & 2	POS. 1 — 2	

All models cULus with all options when ordered with 'Q' contact material.

TERMINAL NUMBERS

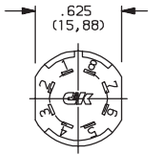

Terminal numbers molded on bottom of housing.

LEGEND

- ● = Detent Positions (45º or 90º)
- ◉ = Key pull possible in these positions.
- ● ◉ = Stop Positions

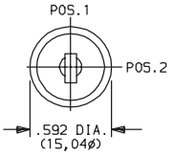

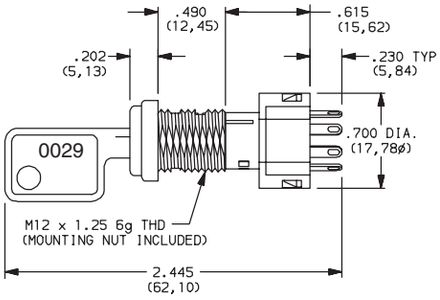

Part number shown: YF01132C203NQ

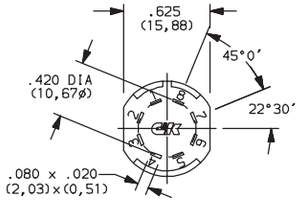

TERMINAL NUMBERS
MOLDED ON HOUSING

KEYING

2 TWO NICKEL PLATED BRASS KEYS

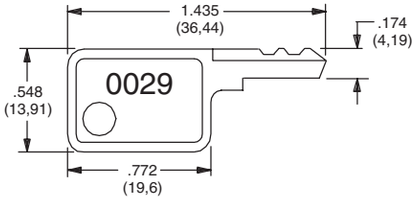

Key Part Number: 960B10029

NOTE: All orders keyed alike with code number on key. For more than one key code, replacement keys, or other special features, consult Customer Service Center.

Third Angle Projection

Dimensions are shown: Inch (mm)
Specifications and dimensions subject to change

LOCK TYPE

C 4 TUMBLER, SINGLE BITTED LOCK WITH DETENT

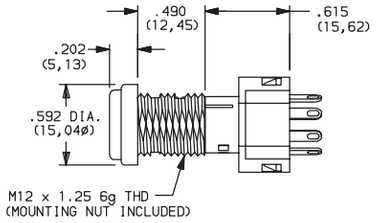

LOCK FINISH

2 STAINLESS STEEL FACING

8 GLOSS BLACK FACING

TERMINATIONS

03 SOLDER LUG WITH HOLE

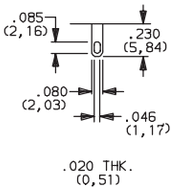

WC WIRE LEAD

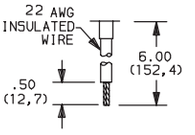

Black wire standard, other colors and lengths available, consult Customer Service Center. UL style 1015.

L Switchlock

Third Angle Projection

Dimensions are shown: Inch (mm)
Specifications and dimensions subject to change

YF Series
4 Tumbler Miniature Switchlocks

MOUNTING STYLE

N WITH NUT

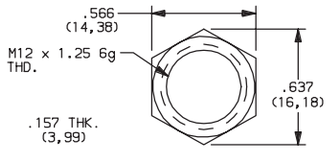

Nut part number: 1790901A47

PANEL MOUNTING

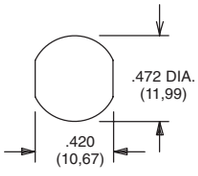

Panel thickness:
.300 (7,62) max.

Switch and Lock Assembly Instructions

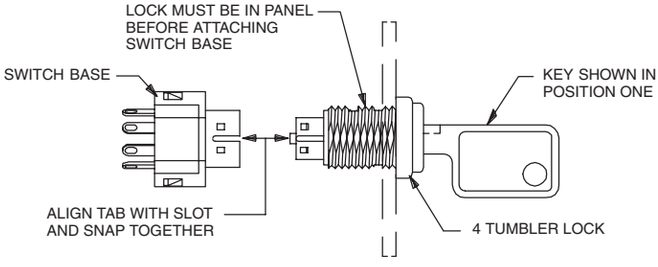

NOTE: Switch installation is permanent. Switch cannot be removed from lock after assembly. Attempts to separate switch and lock may damage switch.

CONTACT MATERIAL

OPTION CODE	RoHS COMPLIANT*	RoHS COMPATIBLE*	CONTACT AND TERMINAL MATERIAL	RATING	
Q	YES	YES	SILVER [2]	POWER	4 AMPS @ 125 V AC or 28 V DC; 2 AMPS @ 250 V AC (UL/CSA).
B	YES	YES	GOLD [1]	LOW LEVEL/DRY CIRCUIT	0.4 VA MAX. @ 20 V AC or DC MAX.

* Note: See Technical Data section of this catalog for RoHS compliant and compatible definitions and specifications.

All models c UL us with all options when ordered with 'Q' contact material.

[1] CONTACTS & TERMINALS: Copper, with gold plate over nickel plate.
[2] CONTACTS & TERMINALS: Copper, silver plated (standard with all termination options).

AVAILABLE HARDWARE

Key Code: 0029

PART NO. (ONE KEY)

960B10029

Material: Brass
Finish: Nickel plate

Third Angle Projection

Dimensions are shown: Inch (mm)
Specifications and dimensions subject to change

YM Series
4 Tumbler Miniature Switchlocks

Features/Benefits

- ***Snap-together assembly allows for pre-wiring of switch***
- ***Wire lead terminations available***
- ***4 Tumbler lock with positive detent***

Typical Applications

- ***Cable TV connectors***
- ***Automotive accessories***
- ***Computers***

Models Available

Specifications

CONTACT RATING: Q contact material: 4 AMPS @ 125 V AC or 28 V DC; 2 AMPS @ 250 V AC (UL/CSA). 4 AMPS @ 125 V AC, 2 AMPS @ 250 V AC, T65, class 1 (VDE). See page L-17 for additional ratings.

ELECTRICAL LIFE: 10,000 make-and-break cycles at full load.

CONTACT RESISTANCE: Below 10 m Ω typ. initial @ 2-4 V DC, 100 mA.

INSULATION RESISTANCE: 10^9 Ω min.

DIELECTRIC STRENGTH: 1,000 Vrms min. @ sea level.

INDEXING: 90º:2 positions.

Materials

LOCK: Zinc alloy with stainless steel facing. 4 tumbler single bitted lock with integral detent mechanism.

KEYS: Two nickel plated brass keys with code number.

SWITCH HOUSING: 6/6 Nylon (UL 94V-2).

CONTACTS & TERMINALS: Q contact material: Copper, silver plated. See page L-17 for additional contact materials.

MOUNTING NUT: Brass, bright zinc plated.

NOTE: Any models supplied with Q or B contact material are RoHS compliant.

NOTE: Specifications and materials listed above are for switchlocks with standard options. For information on specific and custom switchlocks, consult Customer Service Center.

Build-A-Switch

To order, simply select desired option from each category and place in the appropriate box. Available options are shown and described on pages L–16 and L–17. For additional options not shown in catalog, consult Customer Service Center.

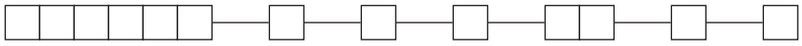

Switch and Lock Function
YM0613 SPST, 90º Index, keypull pos. 1
YM061U SPST, 90º Index, keypull pos. 1 & 2

Keying
2 Two nickel plated brass keys

Lock Type
C 4 Tumbler, single bitted lock with detent

Lock Finish
2 Stainless steel facing
8 Gloss black facing

Terminations
05 Quick connect
WC Wire lead

Mounting Style
N With nut

Contact Material
Q Silver
B Gold

YM Series
4 Tumbler Miniature Switchlocks

SWITCH AND LOCK FUNCTION

NO. POLES	MODEL NO.	SWITCH FUNCTION POS. 1	SWITCH FUNCTION POS. 2	KEY PULL POSITIONS	LOCK CONFIGURATION	INDEXING	SCHEMATIC
SP	YM0613	OFF	ON	Position 1	POS. 1 / 2	90°	
	YM061U			Positions 1& 2	POS. 1 / 2		

SPST

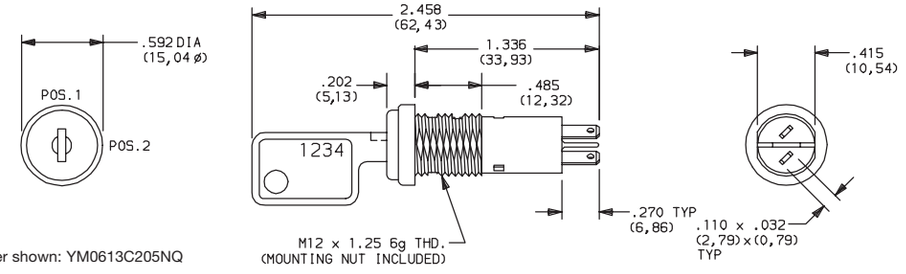

Part number shown: YM0613C205NQ

All models c UL us with all options when ordered with 'Q' contact material.

LEGEND

- ● = Detent Positions (90°)
- ◉ = Key pull possible in these positions
- ◉ = Stop Positions

KEYING

2 TWO NICKEL PLATED BRASS KEYS

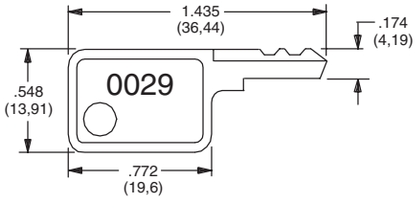

Key part number: 960B10029

NOTE: All orders keyed alike with code number on key. For more than one key code, replacement keys, or other special features, consult Customer Service Center.

LOCK TYPE

C 4 TUMBLER SINGLE BITTED LOCK WITH DETENT

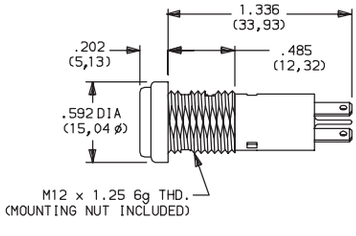

LOCK FINISH

2 STAINLESS STEEL FACING

8 GLOSS BLACK FACING

Third Angle Projection

Dimensions are shown: Inch (mm)
Specifications and dimensions subject to change

TERMINATIONS

05 QUICK CONNECT

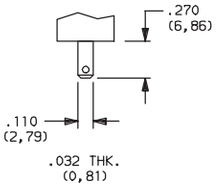

WC WIRE LEAD

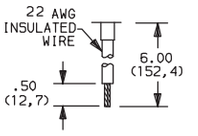

Black wire standard, other colors and lengths available, consult Customer Service Center. UL style 1015.

MOUNTING STYLE

N WITH NUT

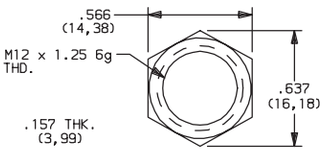

Nut part number: 1790901A47

PANEL MOUNTING

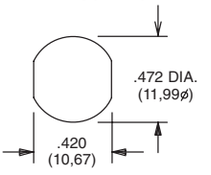

Panel thickness:
.300 (7,62) max.

CONTACT MATERIAL

OPTION CODE	RoHS COMPLIANT*	RoHS COMPATIBLE*	CONTACT AND TERMINAL MATERIAL	RATING	
Q	YES	YES	SILVER [2]	POWER	4 AMPS @ 125 V AC or 28 V DC; 2 AMPS @ 250 AC V AC (UL/CSA).
B	YES	YES	GOLD [1]	LOW LEVEL/DRY CIRCUIT	0.4 VA MAX. @ 20 V AC or DC MAX.

* Note: See Technical Data section of this catalog for RoHS compliant and compatible definitions and specifications.

All models c UL us with all options when ordered with 'Q' contact material.

[1] CONTACTS & TERMINALS: Copper, with gold plate over nickel plate.
[2] CONTACTS & TERMINALS: Copper, silver plated (standard with all termination options).

AVAILABLE HARDWARE

Key Code: 0029
PART NO. (ONE KEY)
960B10029

Material: Brass
Finish: Nickel plate

Third Angle Projection

Dimensions are shown: Inch (mm)
Specifications and dimensions subject to change

P Series
4 Tumbler Snap-in Switchlocks

Models Available

Features/Benefits

- ***Snap-in mounting***
- ***Multi-pole and multi-position***
- ***Positive detent***

Typical Applications

- ***Computers***
- ***Communication equipment***

Specifications

CONTACT RATING: Q contact material: 4 AMPS @ 125 V AC; 1 AMP @ 250 V AC (UL) See page L-20 for additional ratings.

ELECTRICAL LIFE: 10,000 make-and-break cycles at full load.

CONTACT RESISTANCE: Below 10 m Ω typ. initial @ 2-4 V DC, 100 mA for both silver and gold plated contacts.

INSULATION RESISTANCE: 10^9 Ω min.

DIELECTRIC STRENGTH: 1,000 Vrms min. @ sea level.

INDEXING: 45° or 90°, 2-3 positions.

Materials

SWITCH HOUSING & LOCK: One piece construction, 6/6 Nylon (UL 94V-2), black

4 disc tumbler mechanism.

KEYS: One nickel plated brass key and one key with insert molded plastic head.

TUMBLERS: Disc tumblers, brass.

CONTACTS & TERMINALS: Q contact material: Copper, silver plated. See page L-20 for additional contact materials.

NOTE: Any models supplied with Q or B contact material are RoHS compliant.

NOTE: Specifications and materials listed above are for switchlocks with standard options. For information on specific and custom switchlocks, consult Customer Service Center.

Build-A-Switch

To order, simply select desired option from each category and place in the appropriate box. Available options are shown and described on pages L–19 and L–21. For additional options not shown in catalog, consult Customer Service Center.

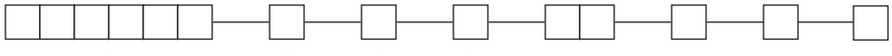

Switch and Lock Function
- **P10113** SP, 90º Index, keypull pos. 1
- **P20113** DP, 90º Index, keypull pos. 1 & 2
- **P100AF** SP, 45º Index, keypull pos. 1, 2 & 3
- **P200AF** DP, 45º Index, keypull pos. 1, 2 & 3
- **P1011U** SP, 90º Index, keypull pos. 1 & 2

Keying
- **2** Two nickel plated brass keys
- **T** One nickel plated brass key with insert molded plastic square head and one nickel plated brass key

Lock Type
- **C** 4 tumbler lock with detent

Lock Finish
- **M** Plastic lock with matte finish

Terminations
- **03** Solder lug
- **WC** Wire lead

Contact Material
- **Q** Silver
- **G** Gold over silver

Lock Color
- **2** Black

Key Color
- **2** Black
- **NONE** Nickel plated brass

SWITCH AND LOCK FUNCTION

NO. POLES	MODEL NO.	CONNECTED TERMINALS POS. 1	POS. 2	POS. 3	KEY PULL POSITIONS	LOCK CONFIGURATION	INDEXING
SP DP	**P10113** **P20113**	8-1 8-1, 4-5	1-3 1-3, 5-7		Position 1	POS. 1 / POS. 2	90°
DP	**P100AF** **P200AF**	8-1 8-1, 4-5	1-2 1-2, 5-6	2-3 2-3, 6-7	Positions 1, 2 & 3	POS. 1 / POS. 2 / POS. 3	45°
SP	**P1011U**	8-1	1-3		Positions 1 & 2	POS. 1 / POS. 2	90°

TERMINAL NUMBERS

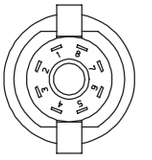

Terminal numbers molded on housing.

All models c UL us with all options when ordered with 'Q' contact material.

LEGEND

- ● = Detent Positions (45° or 90°)
- ◉ = Key pull possible in these positions.
- ◉ = Stop Positions

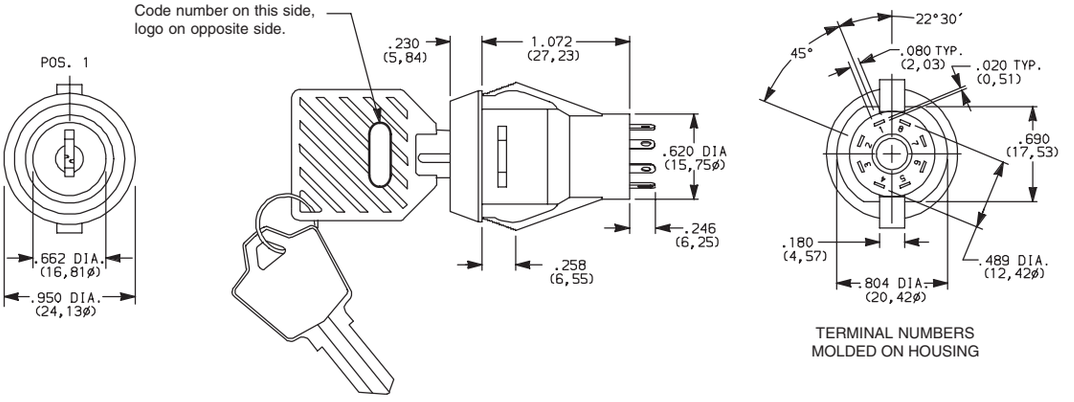

Part number shown: P100AFTCM03Q22

KEYING

OPTION CODE	KEYING OPTIONS	CODE NO. ON KEY	CODE NO. ON LOCK
2	2 NICKEL PLATED BRASS KEYS	YES	NO
T	1 NICKEL PLATED BRASS KEYS, WITH PLASTIC INSERT MOLDED SQUARE HEAD & 1 NICKEL PLATED BRASS KEY	YES	NO

NICKEL PLATED BRASS KEY

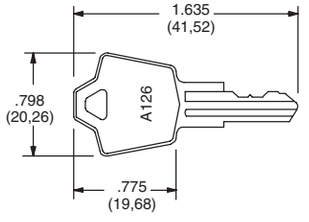

Key part number: 115140126

NICKEL PLATED BRASS KEY WITH PLASTIC INSERT MOLDED SQUARE HEAD

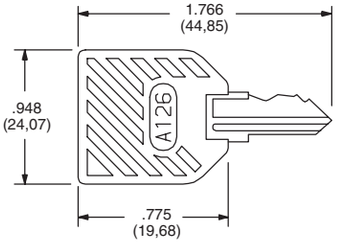

Key part number: 11599112602

NOTE: All orders keyed alike with code number on key. For more than one key code, replacement keys, or other special features, consult Customer Service Center.

Third Angle Projection

Dimensions are shown: Inch (mm)
Specifications and dimensions subject to change

P Series
4 Tumbler Snap-in Switchlocks

LOCK TYPE

C 4 TUMBLER LOCK WITH DETENT

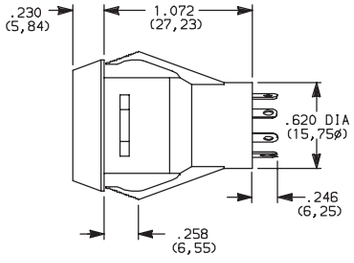

OPTION CODE	LOCK COLOR
2	BLACK

LOCK FINISH

M PLASTIC LOCK WITH MATTE FINISH

TERMINATIONS

03 SOLDER LUG

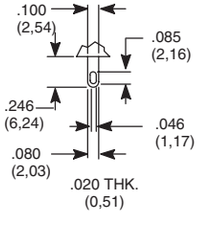

WC WIRE LEAD

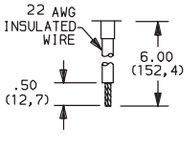

Black wire standard, other colors and lengths available, consult Customer Service Center. UL style 1015.

PC MOUNTING

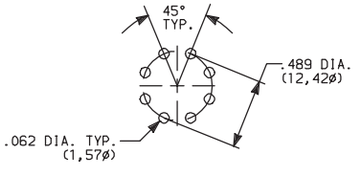

PANEL MOUNTING

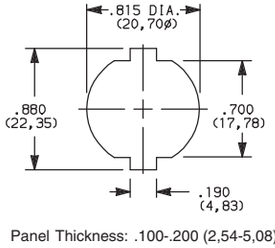

Panel Thickness: .100-.200 (2,54-5,08)

CONTACT MATERIAL

OPTION CODE	RoHS COMPLIANT*	RoHS COMPATIBLE*	CONTACT AND TERMINAL MATERIAL	RATING	
Q	YES	YES	SILVER [2]	POWER	4 AMPS @ 125 V AC; 1 AMP @ 250 V AC (UL/CSA)
G	YES	YES	GOLD OVER SILVER [3]	LOW LEVEL/DRY CIRCUIT OR POWER	0.4 VA MAX. @ 20 V AC or DC MAX. or 4 AMPS @ 125 V AC; 1 AMP @ 250 V AC (UL/CSA)

* Note: See Technical Data section of this catalog for RoHS compliant and compatible definitions and specifications.

[2] CONTACTS & TERMINALS: Copper, silver plated (standard with all termination options)
[3] CONTACTS & TERMINALS: Copper, with gold plate over silver plate termination

All models c UL us with all options when ordered with 'Q' contact material.

Third Angle Projection

Dimensions are shown: Inch (mm)
Specifications and dimensions subject to change

AVAILABLE HARDWARE

Key Code: A126

4 TUMBLER

PART NO. (ONE KEY)

115140126

Material: Brass
Finish: Nickel plate

Key Code: A126

4 TUMBLER

PART NO. (ONE KEY)

1159112602 BLACK

Material: Brass
Finish: Nickel plate
6/6 Nylon insert molded head

Third Angle Projection

Dimensions are shown: Inch (mm)
Specifications and dimensions subject to change

PF Series
5 Tumbler Miniature Snap-in Switchlocks

Models Available

Features/Benefits

- ***Snap-in mounting***
- ***Multi-pole and multi-position***
- ***Positive detent***

Typical Applications

- ***Computers***
- ***Point-of-sale terminals***
- ***Instrumentation***

Specifications

CONTACT RATING: Q contact material: 4 AMPS @ 125 V AC or 28 V DC; 2 AMPS @ 250 V AC (UL/CSA). See page L-25 for additional ratings.

ELECTRICAL LIFE: 10,000 make-and-break cycles at full load.

CONTACT RESISTANCE: Below 10 m Ω typ. initial @ 2-4 V DC, 100 mA, for both silver and gold plated contacts.

INSULATION RESISTANCE: 10^9 Ω min.

DIELECTRIC STRENGTH: 1,000 Vrms min. @ sea level.

INDEXING: 45º: 3 positions, 90º:2 positions.

Materials

LOCK: 6/6 nylon with matte finish (UL 94V-2), black, 5 tumbler, single bitted lock with integral detent mechanism.

KEYS: Two nickel plated brass keys with black plastic head.

SWITCH HOUSING: 6/6 nylon (UL 94V-2).

CONTACTS & TERMINALS: Q contact material: Copper, silver plated. See page L-25 for additional contact materials.

TERMINAL SEAL: Epoxy.

NOTE: Any models supplied with Q or B contact material are RoHS compliant.

NOTE: Specifications and materials listed above are for switchlocks with standard options. For information on specific and custom switchlocks, consult Customer Service Center.

Build-A-Switch

To order, simply select desired option from each category and place in the appropriate box. Available options are shown and described on pages L–23 through L–25. For additional options not shown in catalog, consult Customer Service Center.

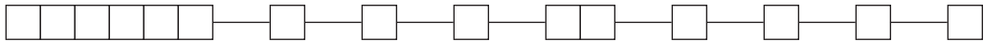

Switch and lock Function
PF011U SP, 90º Index, keypull pos. 1 & 2
PF201U DP, 45º Index, keypull pos. 1 & 3
PF211U DP, 90º Index, keypull pos. 1 & 2

Keying
E Two nickel plated brass keys with insert molded plastic head

Lock Type
B 5 Tumbler lock with detent

Lock Finish
M Plastic lock with matte finish

Terminations
03 Solder lug with hole
WC Wire lead

Lock Style
K Cone shaped facing

Contact Material
Q Silver
B Gold

Lock Color
2 Black

Key Color
2 Black

Third Angle Projection

Dimensions are shown: Inch (mm)
Specifications and dimensions subject to change

SWITCH AND LOCK FUNCTION

SINGLE & DOUBLE POLE SWITCHES							
NO. POLES	MODEL NO.	CONNECTED TERMINALS POS. 1	POS. 2	POS. 3	KEY PULL POSITIONS	LOCK CONFIGURATION	INDEXING
DP	**PF201U**	8-1, 4-5	1-2, 5-6	2-3, 6-7	Positions 1 & 3	POS. 1 2 3	45°
SP DP	**PF011U** **PF211U**	8-1 8-1, 4-5	1-3 1-3, 5-7		Positions 1 & 2	POS. 1 2	90°

All models c UL us with all options when ordered with 'Q' contact material.

LEGEND

- ● = Detent Positions (45° or 90°)
- ◉ = Key pull possible in these positions.
- ◉ = Stop Positions

TERMINAL NUMBERS

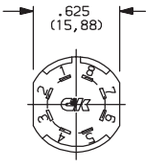

Terminal numbers molded on housing.

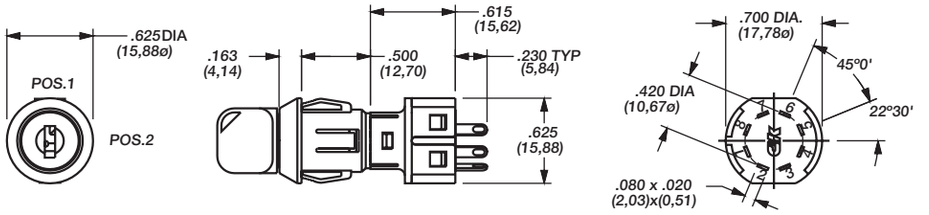

Part number shown: PF011UEBM03KQ22

KEYING

KEY COLOR

KEYING

E TWO NICKEL PLATED BRASS KEYS WITH INSERT MOLDED PLASTIC HEAD

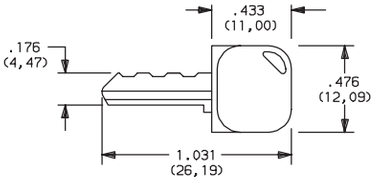

Key part number: 617D1004102

OPTION CODE	KEY COLOR
2	BLACK

NOTE: All orders keyed alike, standard. For more than one key code, replacement keys, or other special features, consult Customer Service Center.

Third Angle Projection

Dimensions are shown: Inch (mm)
Specifications and dimensions subject to change

PF Series
5 Tumbler Miniature Snap-in Switchlocks

LOCK TYPE

LOCK COLOR

LOCK TYPE

B 5 TUMBLER LOCK WITH DETENT

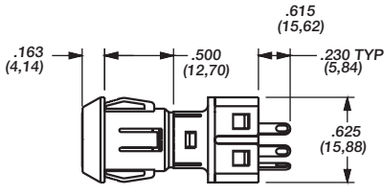

OPTION CODE	LOCK COLOR
2	BLACK

LOCK FINISH

M PLASTIC LOCK WITH MATTE FINISH

TERMINATIONS

03 SOLDER LUG WITH HOLE

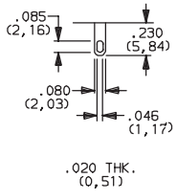

WC WIRE LEAD

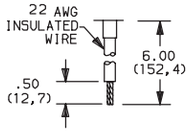

Black wire standard, other colors and lengths available, consult Customer Service Center. UL style 1015.

LOCK STYLE

K CONE SHAPED FACING

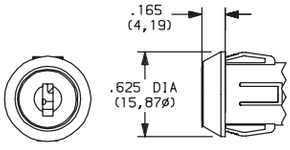

Switch and Lock Assembly Instructions

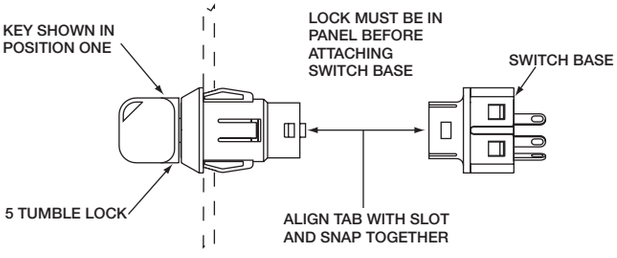

PANEL MOUNTING

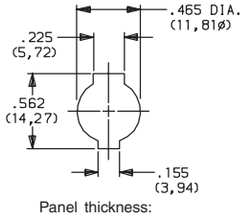

Panel thickness:
.050-.080 (1,27-2,03)

NOTE: Switch installation is permanent. Switch cannot be removed from lock after assembly. Attempts to separate switch and lock may damage switch.

Third Angle Projection

Dimensions are shown: Inch (mm)
Specifications and dimensions subject to change

CONTACT MATERIAL

OPTION CODE	RoHS COMPLIANT*	RoHS COMPATIBLE*	CONTACT AND TERMINAL MATERIAL	RATING	
Q	YES	YES	SILVER [2]	POWER	4 AMPS @ 125 V AC or 28 V DC; 2 AMPS @ 250 V AC (UL/CSA).
B	YES	YES	GOLD [1]	LOW LEVEL/DRY CIRCUIT	0.4 VA MAX. @ 20 V AC or DC MAX.

* Note: See Technical Data section of this catalog for RoHS compliant and compatible definitions and specifications.

All models with all options when ordered with 'Q' contact material.

[1] CONTACTS & TERMINALS: Copper, with gold plate over nickel plate.
[2] CONTACTS & TERMINALS: Copper, silver plated (standard with all termination options).

AVAILABLE HARDWARE

Key Code: 041
PART NO. (ONE KEY)
617D1004102 BLACK

Material: Brass
Finish: Nickel plate
6/6 Nylon insert molded head

Third Angle Projection

Dimensions are shown: Inch (mm)
Specifications and dimensions subject to change

PM Series
5 Tumbler Miniature Snap-in Switchlocks

Models Available

Features/Benefits

- ***International agency listings***
- ***Snap-in mounting***
- ***Wire lead terminations available***
- ***5 Tumbler lock with positive detent***

Typical Applications

- ***Computers***
- ***Point-of-sale terminals***
- ***Marine equipment***

Specifications

CONTACT RATING: Q contact material: 4 AMPS @ 125 V AC or 28 V DC; 2 AMPS @ 250 V AC (UL/CSA); 4 AMPS @ 125 V AC, 2 AMPS @ 250 V AC, T65 (VDE). See page L-28 for additional ratings.

ELECTRICAL LIFE: 10,000 make-and-break cycles at full load.

CONTACT RESISTANCE: Below 10 m Ω typ. initial @ 2-4 V DC, 100 mA, for both silver and gold plated contacts.

INSULATION RESISTANCE: 10^9 Ω min.

DIELECTRIC STRENGTH: 1,000 Vrms min. @ sea level.

INDEXING: 90º:2 positions.

Materials

LOCK: 6/6 nylon with matte finish (UL 94V-2), color black, 5 tumbler, single bitted lock with integral detent mechanism.

KEYS: Two nickel plated brass keys with black plastic head, other colors available.

SWITCH HOUSING: 6/6 nylon (UL 94V-2).

CONTACTS & TERMINALS: Q contact material: Copper, silver plated. See page L-28 for additional contact materials.

NOTE: Any models supplied with Q or B contact material are RoHS compliant.

NOTE: Specifications and materials listed above are for switchlocks with standard options. For information on specific and custom switchlocks, consult Customer Service Center.

Build-A-Switch

To order, simply select desired option from each category and place in the appropriate box. Available options are shown and described on pages L–27 and L-28. For additional options not shown in catalog, consult Customer Service Center.

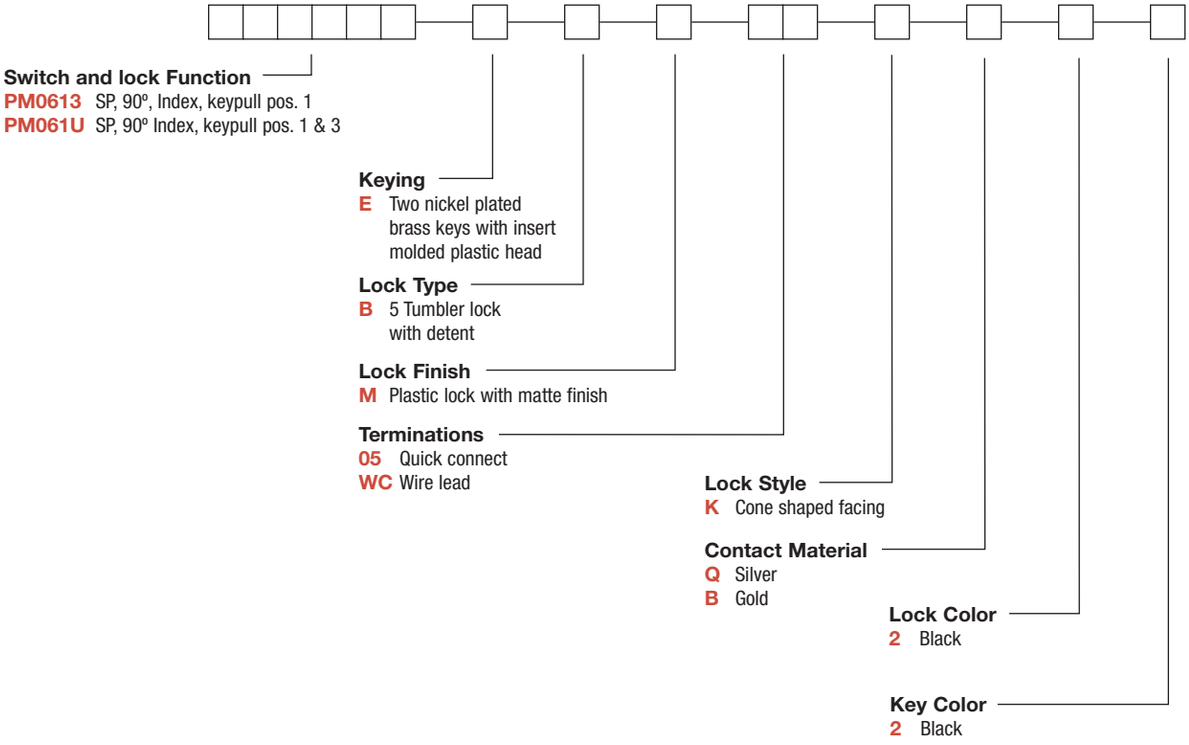

SWITCH AND LOCK FUNCTION

NO. POLES	MODEL NO.	SWITCH FUNCTION POS. 1	SWITCH FUNCTION POS. 2	KEY PULL POSITIONS	LOCK CONFIGURATION	INDEXING
SP	PM0613	OFF	ON	Position 1	POS. 1 — POS. 2	90°
	PM061U			Positions 1 & 2	POS. 1 — POS. 2	

SP

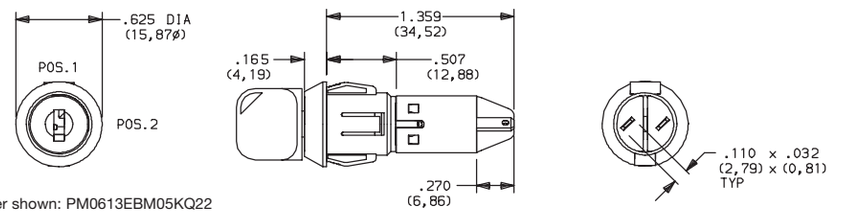

Part number shown: PM0613EBM05KQ22

All models cULus with all options when ordered with 'Q' contact material.

LEGEND

- ● = Detent Position (90°)
- ◉ = Key pull possible in these positions.
- ◉ = Stop Positions

KEYING

KEY COLOR
KEYING

E TWO NICKEL PLATED BRASS KEYS WITH INSERT MOLDED PLASTIC HEAD

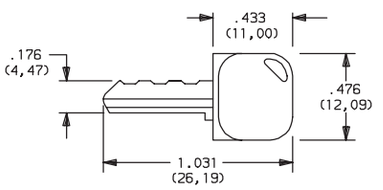

Key part number: 617D1004102

OPTION CODE	KEY COLOR
2	BLACK

NOTE: Molded plastic head color is black, standard. For more than one key code, replacement keys, or other special features, consult Customer Service Center.

LOCK TYPE

LOCK COLOR
LOCK TYPE

B **5 TUMBLER LOCK WITH DETENT**

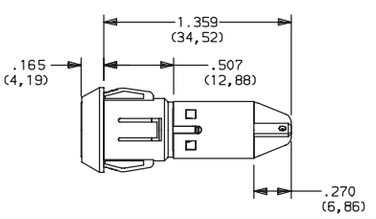

OPTION CODE	LOCK COLOR
2	BLACK

Third Angle Projection

Dimensions are shown: Inch (mm)
Specifications and dimensions subject to change

PM Series
5 Tumbler Miniature Snap-in Switchlocks

LOCK FINISH

M PLASTIC LOCK WITH MATTE FINISH

TERMINATIONS

05 QUICK CONNECT

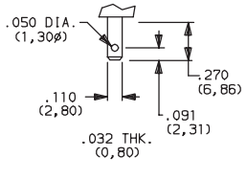

WC WIRE LEAD

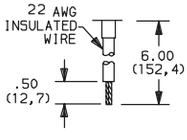

UL style 1015.
Black wire standard, other colors and lengths available, consult Customer Service Center.

LOCK STYLE

K CONE SHAPED FACING

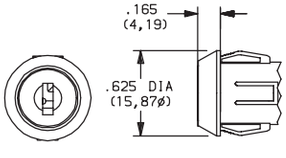

PANEL MOUNTING

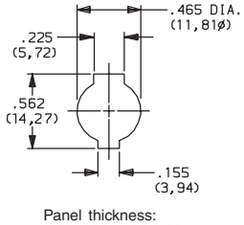

Panel thickness:
.050-.080 (1,27-2,03)

CONTACT MATERIAL

OPTION CODE	RoHS COMPLIANT*	RoHS COMPATIBLE*	CONTACT AND TERMINAL MATERIAL	RATING	
Q	YES	YES	SILVER [2]	POWER	4 AMPS @ 125 V AC or 28 V DC; 2 AMPS @ 250 V AC (UL/CSA). 4 AMPS @ 125 V AC; or 2 AMPS @ 250 V AC; T65 (VDE).
B	YES	YES	GOLD [1]	LOW LEVEL/DRY CIRCUIT	0.4 VA MAX. @ 20 V AC or DC MAX.

* Note: See Technical Data section of this catalog for RoHS compliant and compatible definitions and specifications.

[1] CONTACTS & TERMINALS: Copper, with gold plate over nickel plate.
[2] CONTACTS & TERMINALS: Copper, silver plated (standard with all termination options).

All models c UL us with all options when ordered with 'Q' contact material.

AVAILABLE HARDWARE

Key Code: 041

PART NO. (ONE KEY)

617D1004102 BLACK

Material: Brass
Finish: Nickel plate
6/6 Nylon insert molded head

Third Angle Projection

Dimensions are shown: Inch (mm)
Specifications and dimensions subject to change

A Series
4 & 5 Tumbler 1-4 Pole Switchlocks

Features/Benefits

- ***Multi-pole and multi-position***
- ***Shorting and non-shorting contacts available***
- ***Low level and power capability***
- ***PCB mounting***

Typical Applications

- ***Security alarm systems***
- ***Medical equipment***
- ***Computer servers***

Models Available

Specifications

CONTACT RATING: Q contact material: Switch-2.5 AMPS @ 125 V AC; 350 mA @ 125 V DC (UL/CSA). Carry-5 AMPS continuous. See page L-33 for additional ratings.

ELECTRICAL LIFE: 15,000 make-and-break cycles at full load up to 300,000 detent operations.

CONTACT RESISTANCE: Below 20 m Ω typ. initial @ 2-4 V DC, 100 mA, for both silver and gold plated contacts.

INSULATION RESISTANCE: 10^9 Ω min.

DIELECTRIC STRENGTH: 1,000 Vrms min. @ sea level.

OPERATING TEMPERATURE: –30°C to 85°C.

INDEXING: 30°: 2-4 positions, 45° or 90°: 2-3 positions.

STATIC RESISTANCE: Anti-static models exceed 20 KV DC static resistance @ sea level, lock body to terminals.

Materials

LOCK: Zinc alloy with stainless steel facing.

KEYS: Two nickel plated brass keys with code number.

SWITCH HOUSING: Glass filled 6/6 nylon (UL 94V-0).

MOVABLE CONTACT: Q contact material: Coin silver, silver plated. See page L-38 for additional contact materials.

STATIONARY CONTACTS & TERMINALS: Q contact material: Brass, silver plated. See page L-33 for additional contact materials.

MOUNTING NUT: Zinc alloy.

DRESS NUT: Brass, nickel plated.

TERMINAL SEAL: Epoxy.

NOTE: Any models supplied with Q or B contact material are RoHS compliant.

NOTE: Specifications and materials listed above are for switchlocks with standard options. For information on specific and custom switchlocks, consult Customer Service Center.

Build-A-Switch

To order, simply select desired option from each category and place in the appropriate box. Available options are shown and described on pages L–30 through L–33. For additional options not shown in catalog, consult Customer Service Center.

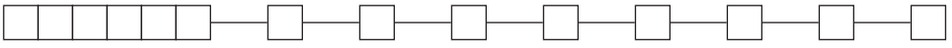

Switch and lock Function

A21613	DP, 30°, keypull pos. 1
A11413	SP, 90°, keypull pos. 1
A31413	3P, 90°, keypull pos. 1
A3141U	3P, 90°, keypull pos. 1 & 2
A11513	SP, 45°, keypull pos. 1
A31513	3P, 45°, keypull pos. 1
A3151U	3P, 45°, keypull pos. 1 & 3
A21582	DP, 45°, keypull pos. 1
A11613	SP, 30°, keypull p05. 1
A1161U	SP, 30°, keypull pos. 1 & 4
A12112	SP, 45°, keypull p05. 1
A42112	4P, 45°, keypull pos. 1

Keying
2 Two nickel plated brass keys

Lock Type
A 4 Tumbler lock
G 5 Tumbler lock with anti-static switch
Y 4 Tumbler lock with anti-static switch

Lock Finish
2 Stainless steel facing
1 Nickel plated with removable dress nut
8 Gloss black facing

Shorting/Non-Shorting
N Non-shorting contacts
S Shorting contacts

Terminations
Z Solder lug
C PC Thru-hole

Mounting/Lock Style
N With nut
R With removable dress nut

Contact Material
Q Silver
B Gold

Seal
NONE No seal
E Epoxy seal

Dimensions are shown: Inch (mm)
Specifications and dimensions subject to change

A Series
4 & 5 Tumbler 1-4 Pole Switchlocks

SWITCH AND LOCK FUNCTION

NO. POLES	MODEL NO.	CONNECTED TERMINALS POS. 1	POS. 2	POS. 3	POS. 4	KEY PULL POSITIONS	LOCK CONFIGURATION	INDEXING
SP 3P	A11413 * A31413	A-1 A-1, B-5, C-9	A-4 A-4, B-8, C-12			Position 1	POS. 1 2	90°
3P	A3141U	A-1, B-5, C-9	A-4, B-8, C-12			Positions 1 & 2	POS. 1 2	
SP 3P	A11513 * A31513	A-1 A-1, B-5, C-9	A-2 A-2, B-6, C-10	A-4 A-4, B-8, C-12		Position 1	POS. 1 2 3	45°
3P	A3151U	A-1, B-5, C-9	A-2, B-6, C-10	A-4, B-8, C-12		Positions 1 & 3	POS. 1 2 3	
DP	A21582	A-4, C-10	A-5, C-11	A-2, C-8		Position 1	POS. 1 3 2	
SP DP	A11613 * A21613	A-1 A-1, C-7	A-2 A-2, C-8	A-3 A-3, C-9	A-4 A-4, C-10	Position 1	POS. 1 2 3 4	30°
SP	A1161U *	A-1	A-2	A-3	A-4	Positions 1 & 4	POS. 1 2 3 4	
SP 4P	A12112 * A42112	A-1 A-1, B-4, C-7, D-10	A-2 A-2, B-5, C-8, D-11			Position 1	POS. 1 2	45°

LEGEND

- ● = Detent Positions (30°, 45° or 90°)
- ◉ = Key pull possible in these positions.
- ● ◉ = Stop Positions

TERMINAL NUMBERS

4P MODEL

3P MODEL

SP MODEL (omit terminals B, C & D)
DP MODEL (omit terminals B & D)

Terminal numbers molded on housing bottom.

***NOTE:** Switchlock models A114XX, A115XX, A116XX and A12112 with 'C' terminations have additional terminal no. 8 as switch support only. This terminal is not connected electrically inside switch.

All models c UL us with all options when ordered with 'Q' contact material.

AX14 models not available with 'S' shorting contacts.

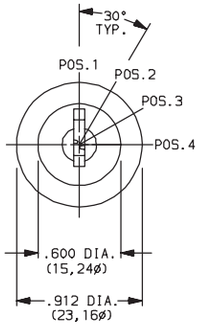

AX161X SWITCH FUNCTION SHOWN

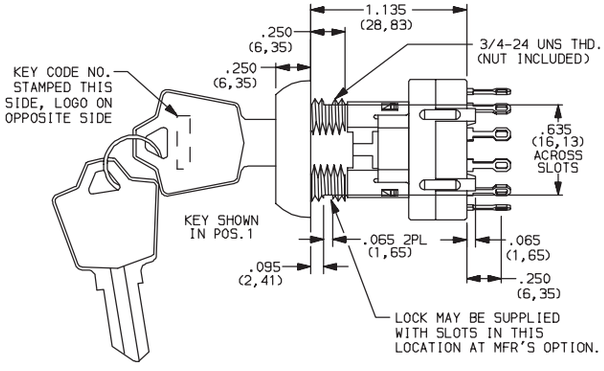

Part number shown: A116132Y2NZNQ

TERMINAL NOS.
MOLDED ON HOUSING

Third Angle Projection

Dimensions are shown: Inch (mm)
Specifications and dimensions subject to change

KEYING

OPTION CODE	KEYING OPTIONS	CODE NO. ON KEY	CODE NO. ON LOCK
2	2 NICKEL PLATED BRASS KEYS	YES	NO

NOTE: All orders keyed alike, standard. For more than one key code, replacement keys, or other special features, consult Customer Service Center.

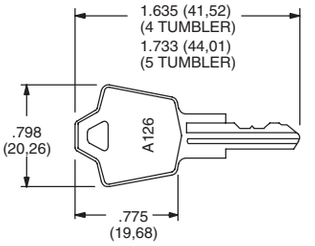

Key part number: 115140126

NOTE: Key head shape subject to change without notice.

LOCK TYPE

A 4 TUMBLER LOCK WITH REMOVABLE DRESS NUT

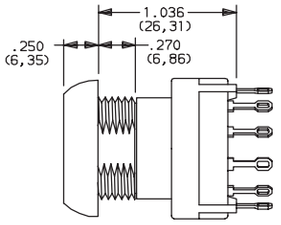

G 5 TUMBLER LOCK WITH ANTI-STATIC SWITCH

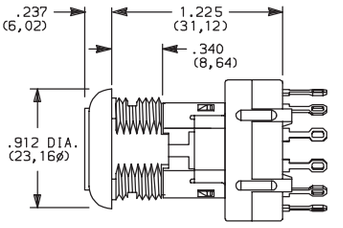

Not available with AX23 models.

Y 4 TUMBLER LOCK WITH ANTI-STATIC SWITCH

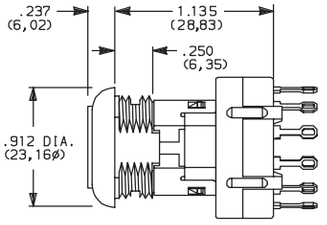

AVAILABLE OPTION COMBINATIONS		
LOCK TYPES	MOUNTING STYLES	
	N	R
G	•	
A		•
Y	•	

NOTE: For available option combinations, see page L-38.

LOCK FINISH

2 STAINLESS STEEL

1 NICKEL

8 GLOSS BLACK

AVAILABLE OPTION COMBINATIONS					
FINISH OPTIONS	LOCK TYPES			MOUNTING STYLES	
	G	A	Y	N	R
1		•			•
2	•		•	•	
8	•	•	•		•

NOTE: For available option combinations, see page M-38.

SHORTING/NON-SHORTING

N NON-SHORTING CONTACTS (break-before-make)

S SHORTING CONTACTS (make-before-break)

Not available with AX14 models.

Third Angle Projection

Dimensions are shown: Inch (mm)
Specifications and dimensions subject to change

A Series
4 & 5 Tumbler 1-4 Pole Switchlocks

TERMINATIONS

Z SOLDER LUG

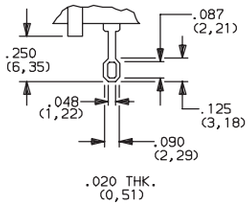

C PC THRU-HOLE

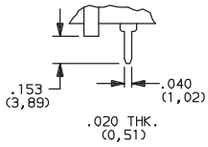

PC MOUNTING

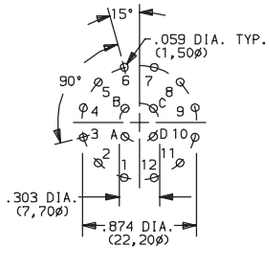

4P MODEL

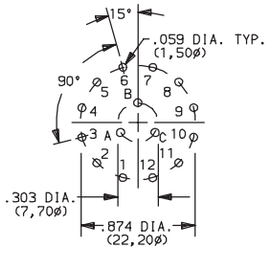

3P MODEL

SP MODEL (omit terminals B, C ,D)
DP MODEL (omit terminals B & D)

MOUNTING/LOCK STYLE

N WITH NUT

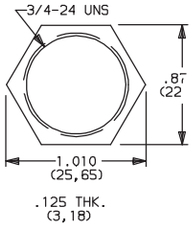

Nut part number: 937C00000

PANEL MOUNTING

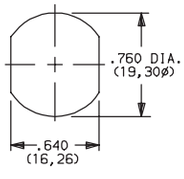

R REMOVABLE DRESS NUT

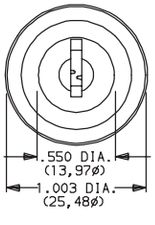

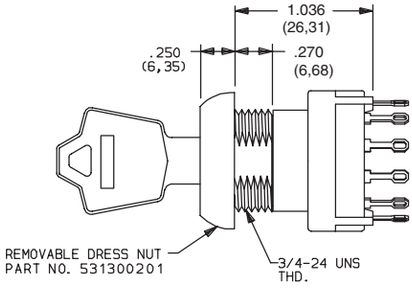

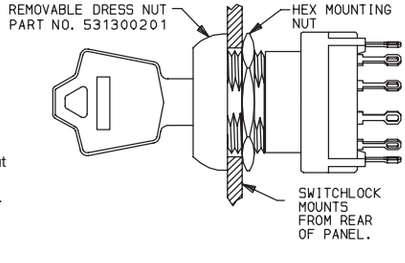

PANEL MOUNTING

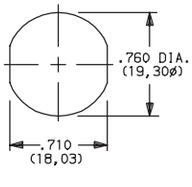

TYPICAL INSTALLATION

Install hex nut with enough clearance to allow for dress nut and panel. Place switch through cutout in rear of panel. Install and tighten dress nut by hand, then tighten hex nut. Always tighten assembly with back of panel hex nut to avoid damaging front of panel.

Third Angle Projection

Dimensions are shown: Inch (mm)
Specifications and dimensions subject to change

MOUNTING/LOCK STYLE

Mounting Information (All Models)

MOUNTING STYLES	PANEL THICKNESS	
	A & Y LOCK TYPES	G LOCK TYPES
N	.105 (2,67) max.	.195 (4,95) max.
R	.125 (3,18) max.	.215 (5,46) max.

AVAILABLE OPTION COMBINATIONS						
MOUNTING STYLES	LOCK FINISHES			LOCK TYPES		
	1	2	8	G	A	Y
N		•	•	•		•
R	•		•		•	

Switch and Lock Assembly Instructions

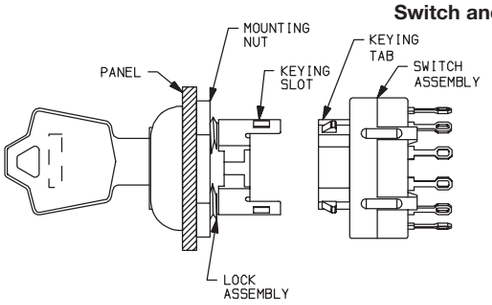

1. Place lock assembly in mounting hole on panel, secure with mounting nut.
2. Align keying tab on switch assembly with keying slot on lock assembly.
3. Snap assemblies together.
4. Switch installation is permanent. Switch cannot be removed from lock after assembly. Attempting to separate switch and lock may cause damage to switchlock.

CONTACT MATERIAL

OPTION CODE	RoHS COMPLIANT*	RoHS COMPATIBLE*	CONTACT AND TERMINAL MATERIAL	RATING	
Q	YES	YES	SILVER [2]	POWER	SWITCH-2.5 AMPS @ 125 V AC; 350 mA @ 125 V DC (UL/CSA). CARRY-5 AMPS CONTINUOUS.
B	YES	YES	GOLD [1]	LOW LEVEL/DRY CIRCUIT	0.4 VA MAX. @ 20 V AC or DC MAX.

[1] MOVABLE CONTACT: Copper alloy, with gold plate over nickel plate.
STATIONARY CONTACTS & TERMINALS: Brass, with gold plate over nickel plate.
[2] MOVABLE CONTACT: Coin silver, silver plated.
STATIONARY CONTACTS & TERMINALS: Brass, silver plated (standard with all termination options).

* Note: See Technical Data section of this catalog for RoHS compliant and compatible definitions and specifications.

All models c UL us with all options when ordered with 'Q' contact material.

SEAL

NONE NO SEAL

E EPOXY SEAL

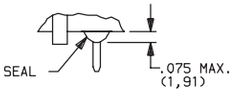

AVAILABLE HARDWARE

Key Code: A126
4 TUMBLER
PART NO. (ONE KEY)
115140126
Material: Brass
Finish: Nickel plate

Key Code: D001
5 TUMBLER
PART NO. (ONE KEY)
115441001
Material: Brass
Finish: Nickel plate

Third Angle Projection

Dimensions are shown: Inch (mm)
Specifications and dimensions subject to change

H Series
4 & 6 Tumbler Power Switchlocks

Models Available

Features/Benefits

- ***Positive detent***
- ***Multi-pole and multi-position***
- ***Snap-together assembly***
- ***Power switching***

Typical Applications

- ***Machine controls***
- ***Elevators***

Specifications

CONTACT RATING: Q contact material: 12 AMPS @ 125 V AC; 6 AMPS @ 250 V AC; 1 AMP @ 125 V DC (UL/CSA). See page L-37 for additional ratings.

ELECTRICAL LIFE: 10,000 make-and-break cycles at full load.

CONTACT RESISTANCE: Below 10 m Ω typ. initial @ 2-4 V DC, 100 mA, for both silver and gold plated contacts.

INSULATION RESISTANCE: 10^9 Ω min.

DIELECTRIC STRENGTH: 1,000 Vrms min. @ sea level.

OPERATING TEMPERATURE: –30°C to 85°C.

INDEXING: 45° or 90°, 2-4 Positions.

NOTE: Any models supplied with Q or B contact material are RoHS compliant.

NOTE: Specifications and materials listed above are for switchlocks with standard options. For information on specific and custom switchlocks, consult Customer Service Center.

Materials

LOCK: Zinc alloy with stainless steel facing (4 tumbler locks and 6 tumbler tubular lock).

KEYS: Two nickel plated brass keys with code number (4 tumbler). Two die cast chrome plated zinc alloy keys (6 tumbler).

SWITCH HOUSING: 6/6 nylon (UL 94V-2).

CONTACTS & TERMINALS: Q contact material: Copper, silver plated. See page L-37 for additional contact materials.

CONTACT SPRING: Music wire or stainless steel.

MOUNTING NUT: Zinc alloy.

MOUNTING CLIP: Steel, zinc plated.

DRESS NUT: Brass, nickel plated.

TERMINAL SEAL: Epoxy.

Build-A-Switch

To order, simply select desired option from each category and place in the appropriate box. Available options are shown and described on pages L–35 through L–38. For additional options not shown in catalog, consult Customer Service Center.

Switch and Lock Function
- **H10113** SP, 90° Index, keypull pos.1
- **H2011U** DP, 90° Index, keypull pos. 1 & 2
- **H100AA** SP, 45° Index, keypull pos. 1,2 & 3
- **H200AA** DP, 45° Index, keypull pos. 1, 2 & 3
- **H20113** DP, 90° Index, keypull pos. 1
- **H1011U** SP, 90° Index, keypull pos.1 & 2
- **H1417U** SP, 90° Index, keypull pos. 1,2 & 3

Keying
- **2** Two nickel plated brass keys (4 tumbler) or two die cast zinc alloy keys with chrome plating (6 tumbler)
- **T** One nickel plated brass key with plastic insert molded square head and one nickel plated brass key

Lock Type
- **F** 4 Tumbler lock with detent
- **V** 6 Tumbler tubular lock

Lock Finish
- **2** Stainless steel facing
- **8** Gloss black facing

Terminations
- **05** Quick connect
- **WC** Wire lead

Mounting/Lock Style
- **N** With nut
- **D** With clip

Contact Material
- **Q** Silver
- **B** Gold

Key Color
- **NONE** Nickel plated brass (4 tumbler) or chrome plated zinc alloy (6 tumbler)
- **2** Black

Dimensions are shown: Inch (mm)
Specifications and dimensions subject to change

SWITCH AND LOCK FUNCTION

NO. TUMBLERS	NO. POLES	MODEL NO.	CONNECTED TERMINALS POS. 1	POS. 2	POS. 3	POS. 4	KEY PULL POSITIONS	LOCK CONFIGURATION	INDEXING
4	SP DP	**H100AA** **H200AA**	7-8 7-8, 3-4	8-1 8-1, 4-5	6-7 6-7, 2-3		Positions 1, 2 & 3		45°
4 & 6	SP DP	**H10113** **H20113**	7-8 7-8, 3-4	8-2 8-2, 4-6			Position 1		90°
4 & 6	SP DP	**H1011U** **H2011U**	7-8 7-8, 3-4	8-2 8-2, 4-6			Positions 1 & 2		
4	SP	**H1417U**	6-8	8-2	5-6		Positions 1, 2 & 3	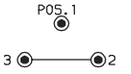	

All models cULus with all options when ordered with 'G' or 'Q' contact material.

LEGEND

- ● = Detent Positions (45° or 90°)
- ◉ = Key pull possible in these positions.
- ◉ = Stop Positions

TERMINAL NUMBERS

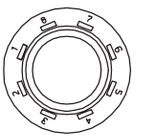

Terminal numbers molded on housing.

4 Tumbler

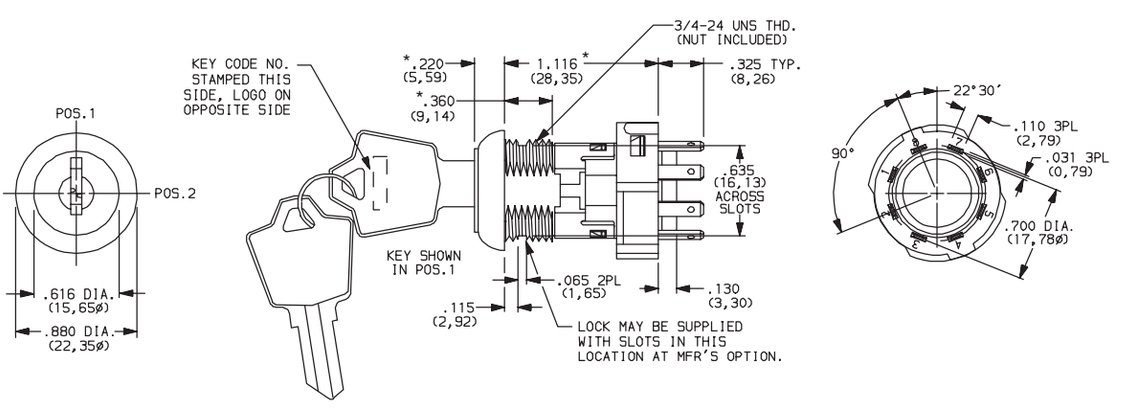

Part number shown: H101132F205NQ

6 Tumbler

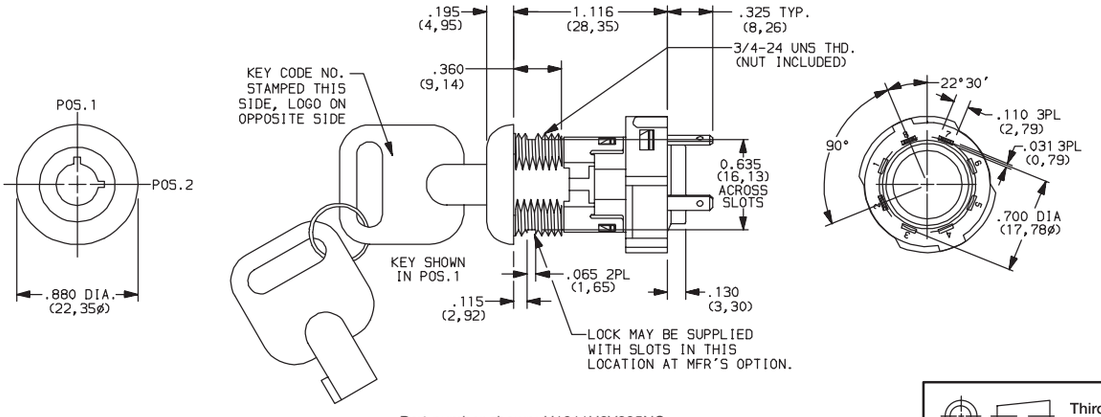

Part number shown: H1011U2V205NQ

Third Angle Projection

Dimensions are shown: Inch (mm)
Specifications and dimensions subject to change

H Series
4 & 6 Tumbler Power Switchlocks

KEYING

OPTION CODE	KEY OPTIONS	CODE NO. ON KEY	CODE NO. ON LOCK
2	2 NICKEL PLATED BRASS KEYS (4 TUMBLER) OR 2 CHROME PLATED ZINC ALLOY KEYS (6 TUMBLER)	YES	NO
T	1 NICKEL PLATED BRASS KEY WITH PLASTIC INSERT MOLDED SQUARE HEAD & 1 NICKEL PLATED BRASS KEY	YES	NO

OPTION CODE	KEY COLOR
NONE	NICKEL PLATED BRASS (4 TUMBLER) OR CHROME PLATED ZINC ALLOY (6 TUMBLER)
2	BLACK

NOTE: All orders keyed alike, standard. For more than one key code, replacement keys, or other special features, consult Customer Service Center.

NICKEL PLATED BRASS KEY

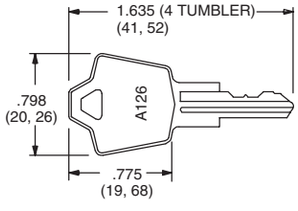

Key part number: 115140126

NICKEL PLATED BRASS KEY WITH PLASTIC INSERT MOLDED SQUARE HEAD

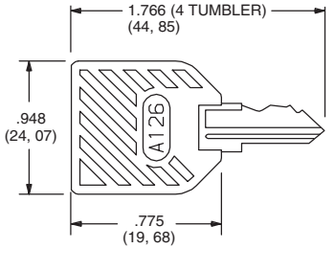

Key part number: 11599112602

CHROME PLATED ZINC ALLOY KEY

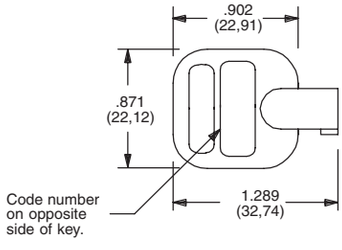

Key part number: 363C1AAAA

NOTE: Key head shape subject to change without notice.

LOCK TYPE

F 4 TUMBLER LOCK WITH ADDED DETENT

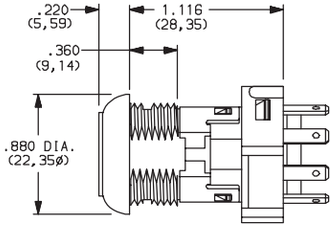

V 6 TUMBLER TUBULAR LOCK

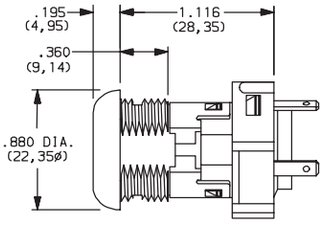

LOCK FINISH

2 STAINLESS STEEL FACING

Available with V lock type only.

8 GLOSS BLACK FACING

TERMINATIONS

05 .110" QUICK CONNECT

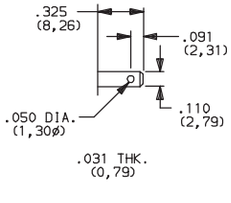

WC WIRE LEAD

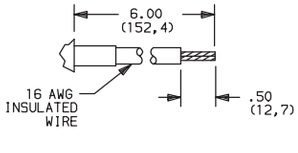

Black wire standard, other colors, gages and lengths available, consult Customer Service Center. UL style 1015.

Third Angle Projection

Dimensions are shown: Inch (mm)
Specifications and dimensions subject to change

MOUNTING/LOCK STYLE

N WITH NUT

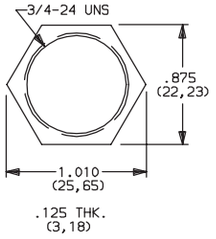

Nut part number: 937C00000

D WITH CLIP

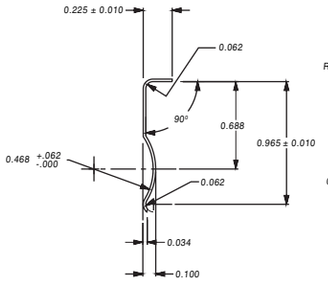

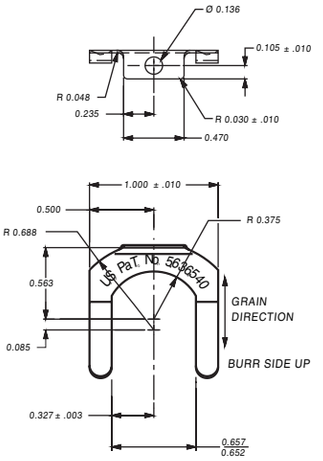

Clip part number: 906B00000

PANEL MOUNTING

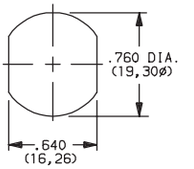

MOUNTING STYLES	PANEL THICKNESS
D	.065-.085 (1,65-2,16)
N	.195 (4,95) max.

Switch and Lock Assembly Instructions

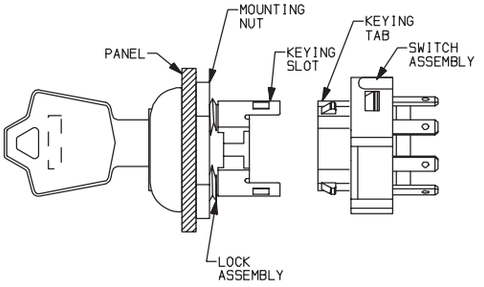

1. Place lock assembly in mounting hole on panel, secure with mounting nut.
2. Align keying tab on switch assembly with keying slot on lock assembly.
3. Snap assemblies together.
4. Switch installation is permanent. Switch cannot be removed from lock after assembly. Attempting to separate switch and lock may cause damage to switchlock.

CONTACT MATERIAL

OPTION CODE	RoHS COMPLIANT*	RoHS COMPATIBLE*	CONTACT AND TERMINAL MATERIAL	RATING	
Q	YES	YES	SILVER [2]	POWER	12 AMPS @ 125 V AC; 6 AMPS @ 250 V AC; 1 AMP @ 125 V DC (UL/CSA).
B	YES	YES	GOLD [1]	LOW LEVEL/DRY CIRCUIT	0.4 VA MAX. @ 20 V AC or DC MAX.

[1] CONTACTS & TERMINALS: Copper, with gold plate over nickel plate.
[2] CONTACTS & TERMINALS: Copper, silver plated.

* Note: See Technical Data section of this catalog for RoHS compliant and compatible definition and specifications.

All models c UL us with all options when ordered with 'Q' contact material.

Third Angle Projection

Dimensions are shown: Inch (mm)
Specifications and dimensions subject to change

AVAILABLE HARDWARE

Key Code: A126

4 TUMBLER

PART NO. (ONE KEY)

115140126

Material: Brass
Finish: Nickel plate

Key Code: AAAA

PART NO. (ONE KEY)

363C1AAAA

Material: Zinc Alloy
Finish: Chrome plate

Key Code: A126

4 TUMBLER

PART NO. (ONE KEY)

1159112602 BLACK

Material: Brass
Finish: Nickel plate
6/6 Nylon insert molded head

Third Angle Projection

Dimensions are shown: Inch (mm)
Specifications and dimensions subject to change

PL Series
5 Tumbler Miniature Camlocks

Features/Benefits

- ***Cost-effective security***
- ***Custom cams available***

Typical Applications

- ***Office furniture***
- ***Cash registers***
- ***Copy machines***

Specifications

INDEXING: 90°: 2 positions.

NOTE: Specifications and materials listed above are for camlocks with standard options. For information on specific and custom camlocks, consult Customer Service Center.

Materials

LOCK: 6/6 nylon (UL 94V-2). Color, black.
5 tumbler, single bitted lock with integral detent mechanism.

KEYS: Two nickel plated brass keys with black plastic insert molded head.

CAM: 6/6 nylon (UL 94V-2).

Build-A-Switch

To order, simply select desired option from each category and place in the appropriate box. Available options are shown and described on pages L–40 and L-41. For additional options not shown in catalog, consult Customer Service Center.

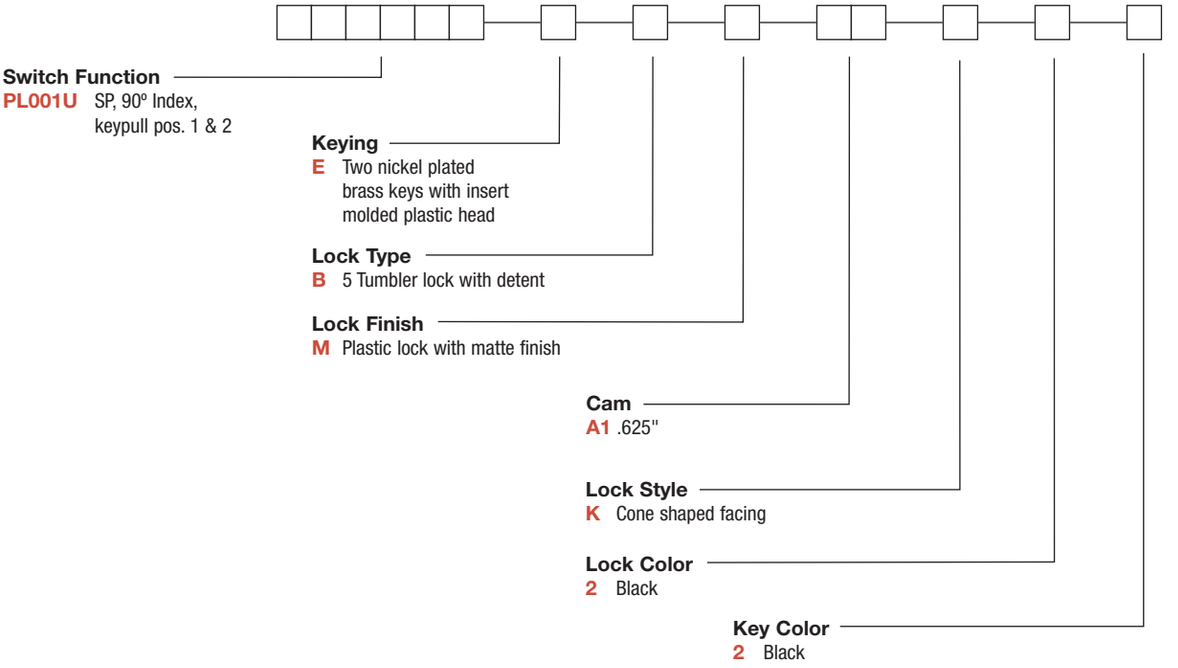

PL Series
5 Tumbler Miniature Camlocks

LOCK FUNCTION

MODEL NO.	KEY PULL POSITIONS	LOCK CONFIGURATION	INDEXING
PL001U	Positions 1 & 2	POS. 1 / POS. 2	90°

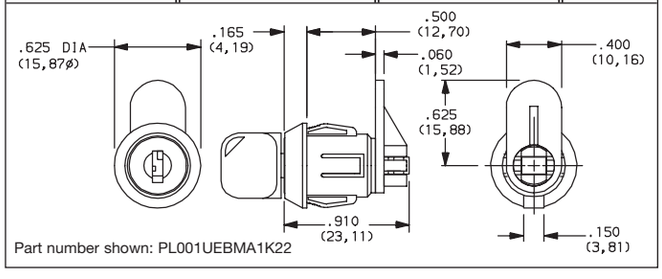

Part number shown: PL001UEBMA1K22

LEGEND

- ● = Detent Position (90°)
- = Key pull possible in these positions.
- = Stop Positions

KEYING

KEY COLOR
KEYING

E TWO NICKEL PLATED BRASS KEYS WITH INSERT MOLDED PLASTIC HEAD

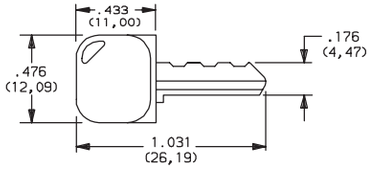

Key part number: 617D1004102

OPTION CODE	KEY COLOR
2	BLACK

NOTE: All orders keyed alike, standard. For more than one key code, replacement keys, or other special features, consult Customer Service Center.

LOCK TYPE

LOCK COLOR
LOCK TYPE

B 5 TUMBLER LOCK WITH DETENT

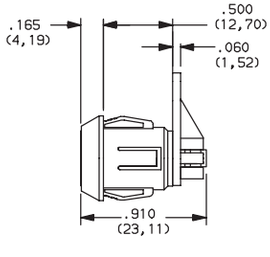

OPTION CODE	LOCK COLOR
2	BLACK

LOCK FINISH

M PLASTIC LOCK WITH MATTE FINISH

Third Angle Projection

Dimensions are shown: Inch (mm)
Specifications and dimensions subject to change

CAM

A1 .625"

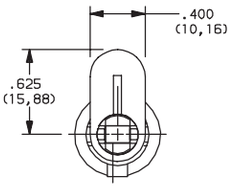

NOTE: Cam not assembled to switch. Other cam lengths and styles available, consult Customer Service Center.

LOCK STYLE

K CONE SHAPED FACING

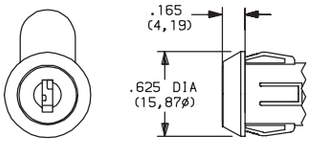

PANEL MOUNTING

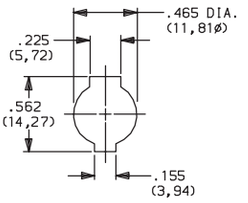

Panel thickness: .050-.080 (1,27-2,03)

AVAILABLE HARDWARE

Key Code: 041

PART NO. (ONE KEY)

617D1004102 BLACK

Material: Brass
Finish: Nickel plate
6/6 Nylon insert molded head

Third Angle Projection

Dimensions are shown: Inch (mm)
Specifications and dimensions subject to change

Thumbwheel
Product Selection Guide

Thumbwheel	
Series	**3**
Switch Type	Thumbwheel
Sealed	•
Dust Lens	•
Max. Current	1 Amp
Actuators	
Thumbwheel Actuator	•
Number of Positions	
10 Position	•
16 Position	•
Mounting Options	
Board Mount w/Pins	•
Front Mount	•
Rear Mount	•
Snap-in	•
Page Number	M-3

Features/Benefits

- ***Most complete product offering in the industry***
- ***Spacers available to fit most panel cutouts***
- ***Front or rear mounting options***

Typical Applications

- ***Test & measurement equipment***
- ***Industrial equipment***
- ***Computer devices***

Specifications

CONTACT RATING:
CARRY: 1 AMP continuous.
SWITCH: 100 mA max.

OPERATING VOLTAGE: 50 mV to 28 V DC or 120 V AC.

ELECTRICAL LIFE: 100,000 actuations.

CONTACT RESISTANCE: Below 100 m Ω typ. initial @ 2-4 V DC, 100 mA.

INSULATION RESISTANCE: 10^9 Ω min.

DIELECTRIC STRENGTH: 500 Vrms min. @ sea level between common terminal and any output.

OPERATING TEMPERATURE: -40ºC to 65ºC.

Materials

HOUSING: ABS plastic.

THUMBWHEEL: ABS plastic.

ROTOR CONTACTS: Precious metal on copper alloy.

STATOR CONTACTS: Hard gold over nickel over copper on epoxy fiberglass.

NOTE: Specifications and materials listed above are for switches with standard options For information on specific and custom switches, consult Customer Service Center.

* Note: All models listed are RoHS compliant. See Technical Data section of this catalog for RoHS compliant and compatible definitions and specifications.

Build-A-Switch

To order, simply select desired option from each category and place in the appropriate box. Available options are shown and described on pages M–4 thru M–10. For additional options not shown in catalog, consult Customer Service Center.

Consult factory for illumination availability.

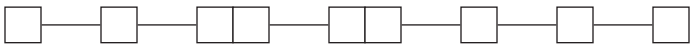

Series
3 Thumbwheel switch

Number of Sections
0 Switch section
1 1 Switch section
2 2 Switch sections
3 3 Switch sections
4 4 Switch sections
5 5 Switch sections
6 6 Switch sections
7 7 Switch sections
8 8 Switch sections
9 More than 8 switch sections

Function Code
11 Decimal, SP, 10 position
14 Resistor decade
21 BCD, 10 position
23 Complement of BCD, 10 position
27 BCD, 10 position
31 BCD, 10 position
71 BCH, 16 position

Mounting Style
00 Snap-in, front mount
09 Snap-in, front mount*
10 Rear mount
19 Rear mount*
20 Rear mount
29 Rear mount*

Terminations
0 Type 0
1 Type 1, extended type 0
N Solder pins with .100" spacing**
P Solder pins with .156" spacing**
6 Type 6 No pins
9 Any combination

Color/Marking/Stops
0 Matte black body, gloss black wheel, white marking

Seal
0 No seal
1 Sealed contacts
2 Dust lens
3 Sealed contacts & dust lens

*X9 mounting styles must be ordered with '0' number of sections.

** Note: Termination option N (RoHS compliant) replaced termination option 3 (Non-RoHS compliant). Termination option P (RoHS compliant) replaced termination option B (Non-RoHS compliant).

3 Series
Thumbwheel Switches

SERIES

3 THUMBWHEEL SWITCHES

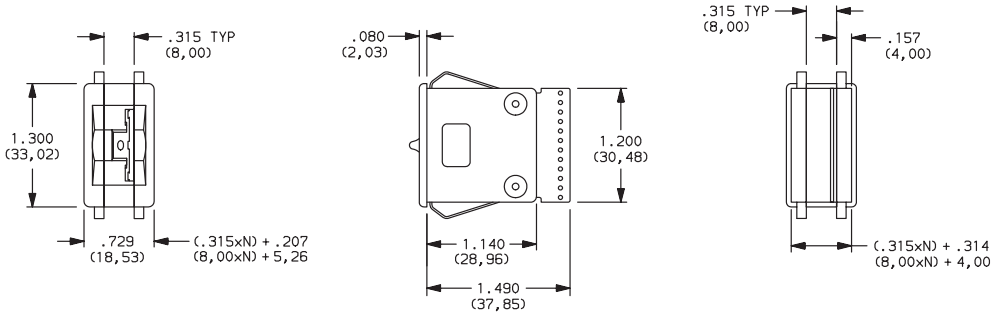

NUMBER OF SECTIONS

0 Switch section only, no assembly. Blank bodies are considered sections; endplates are not sections. Must be ordered with 09 or 19 mounting style options, see pages M–5 and M–6.

1-8 Number of switch sections in assembly, includes endplates.

9 More than 8 switch sections, specify on CONFIGURATION FORM, page M–10 and consult Customer Service Center.

NOTE: Endplates and blank sections available separately, see pages M–13 and M–14.

FUNCTION CODE

11 DECIMAL–1 POLE; 10 POSITION

WHEEL	SIGNALS CONNECTED TO COMMON SIGNAL C									
	0	1	2	3	4	5	6	7	8	9	C
0	●										●
1		●									●
2			●								●
3				●							●
4					●						●
5						●					●
6							●				●
7								●			●
8									●		●
9										●	●
	2	3	4	5	6	7	8	9	10	11	12
	TERM. LOCATION										

Available Terminations: 0, 1, N

See fig. 1, page M-7.

14 RESISTOR DECADE; 1-2-2-2-2 CODE (RESISTORS NOT SUPPLIED)

WHEEL	SWITCH CIRCUIT					
0	●					●
1	●	●				●
2	●	●			●	●
3	●	●			●	●
4	●	●		●	●	●
5	●	●		●	●	●
6	●	●	●	●	●	●
7	●	●	●	●	●	●
8	●	●	●	●	●	●
9	●	●	●	●	●	●
	11	9	7	5	3	1,2 12
	TERM. LOCATION					

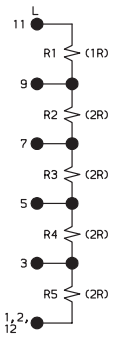

Available Terminations: 1

See fig. 1, page M-7.

21 BCD 1-2-4-8; 10 POSITION

WHEEL	SIGNALS CONN. TO COMM. SIG. C				
	1	2	4	8	C
0					●
1	●				●
2		●			●
3	●	●			●
4			●		●
5	●		●		●
6		●	●		●
7	●	●	●		●
8				●	●
9	●			●	●
	3	5	7	11	9
	TERM. LOCATION				

Available Terminations: 0, 1, N

See fig. 1, page M-7.

NOTE: For terminal location diagram, see page M-7.

Third Angle Projection

Dimensions are shown: Inches (mm)
Specifications and dimensions subject to change

FUNCTION CODE

23 COMPLEMENT OF BCD 1-2-4-8; 10 POSITION

WHEEL	SIGNALS CONN. TO COMM. SIG. C				
	$\overline{1}$	$\overline{2}$	$\overline{4}$	$\overline{8}$	C
0	●	●	●	●	●
1		●	●	●	●
2	●		●	●	●
3			●	●	●
4	●	●		●	●
5		●		●	●
6	●			●	●
7				●	●
8	●	●	●		●
9		●	●		●
	3	9	11	5	7
	TERM. LOCATION				

Available Terminations: 0, 1, N

See fig. 1, page M-7.

27 BCD 1-2-4-8; 10 POSITION

WHEEL	SIGNALS CONN. TO COMM. SIG. C				
	1	2	4	8	C
0					●
1	●				●
2		●			●
3	●	●			●
4			●		●
5	●		●		●
6		●	●		●
7	●	●	●		●
8				●	●
9	●			●	●
	4	5	1	2	3
	TERM. LOCATION				

Available Terminations: P

See fig. 2, page M-7.

31 BCD 1-2-4-8; 10 POSITION

WHEEL	SIGNALS CONN. TO COMM. SIG. C				
	1	2	4	8	C
0					●
1	●				●
2		●			●
3	●	●			●
4			●		●
5	●		●		●
6		●	●		●
7	●	●	●		●
8				●	●
9	●			●	●
	2	3	11	9	8
	TERM. LOCATION				

Available Terminations: 0, 1, N

See fig. 1, page M-7.

71 BINARY CODED HEXADECIMAL, 16 POSITION

WHEEL	SIGNALS CONN. TO COMM. SIG. C				
	1	2	4	8	C
0					●
1	●				●
2		●			●
3	●	●			●
4			●		●
5	●		●		●
6		●	●		●
7	●	●	●		●
8				●	●
9	●			●	●
A		●		●	●
B	●	●		●	●
C			●	●	●
D	●		●	●	●
E		●	●	●	●
F	●	●	●	●	●
	3	5	7	11	9
	TERM. LOCATION				

Available Terminations: 0, 1, N

See fig. 1, page M-7.

NOTE: For terminal location diagram, see page M–7.

MOUNTING STYLE

Type 0 Snap-In Front Mount

MOUNTING STYLE	DIM. 'A'
00	(.315 x N) + .326 (8,00 x N) + (8,28)

N = Number of sections.

Recommended panel thickness:
0.46-.125
(1,16-3,18)

PANEL MOUNTING

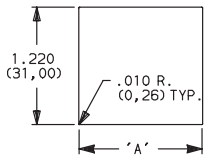

00 SWITCH ASSEMBLY W/ ENDPLATES–.315 (8,00) SECTION PITCH

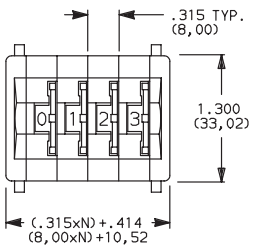

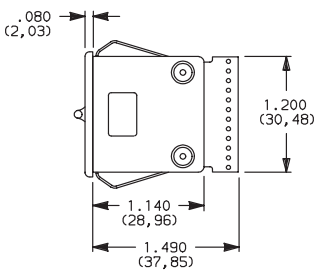

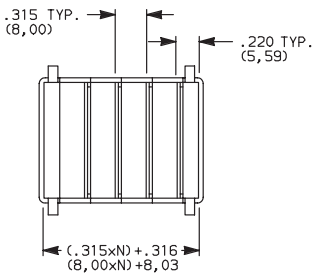

N = Number of sections.

09 SWITCH SECTION ONLY–UNASSEMBLED WITHOUT ENDPLATES OR SPACERS
(Must be ordered with number of sections option "0", see Page M–4.)

NOTE: Endplates, blank sections, spacers
and assembly hardware available separately, see pages M–8 and M–9.

Third Angle Projection

Dimensions are shown: Inches (mm)
Specifications and dimensions subject to change

MOUNTING STYLE

Type 1 Rear Mount

MOUNTING STYLE	DIM. 'A'	DIM. 'B'
10	(.350 x N) + .340 (8,89 x N) + (8,64)	(.350 x N) + .560 (8,89 x N) + (14,22)

N = Number of sections.

Recommended panel thickness:
0.46-.125
(1,16-3,18)

PANEL MOUNTING

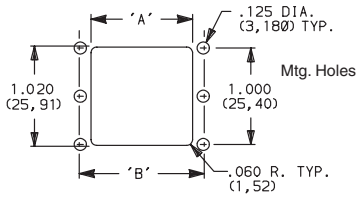

10 SWITCH ASSEMBLY W/ ENDPLATES–.350 (8,89) SECTION PITCH

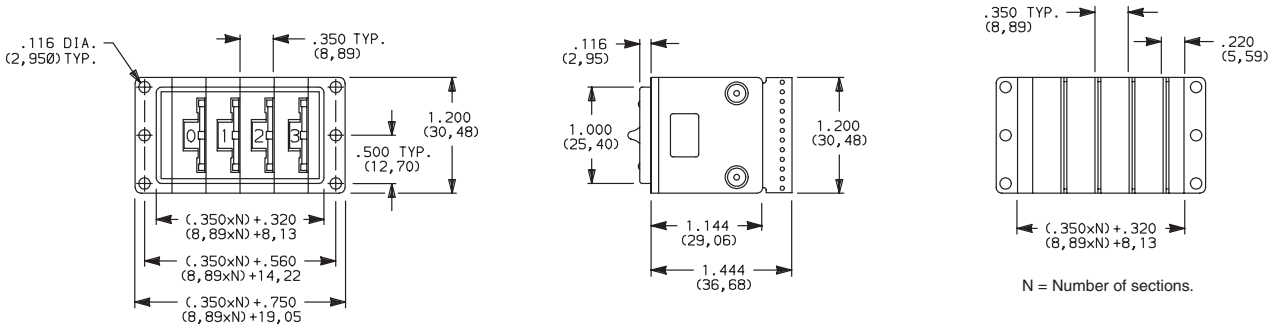

N = Number of sections.

19 SWITCH SECTION ONLY–UNASSEMBLED WITHOUT ENDPLATES OR SPACERS
(Must be ordered with number of sections option "0", see Page M–4.)

Type 2 Rear Mount

20 SWITCH ASSEMBLY W/ ENDPLATES–.350 (8,89) SECTION PITCH

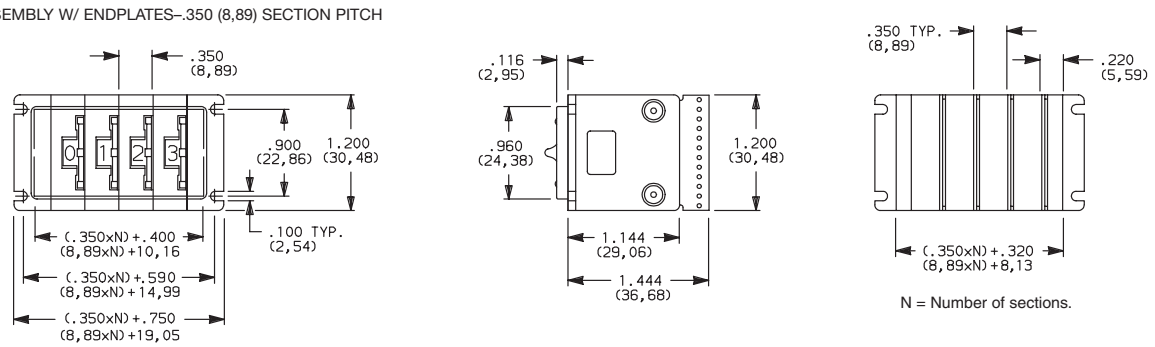

N = Number of sections.

29 SWITCH SECTION ONLY–UNASSEMBLED WITHOUT ENDPLATES OR SPACERS
(Must be ordered with number of sections option "0", see Page M–4.)

NOTE: Endplates, blank sections, spacers and assembly hardware available separately, see pages M–8 and M–9.

Third Angle Projection

Dimensions are shown: Inches (mm)
Specifications and dimensions subject to change

TERMINATIONS

0 TYPE 0

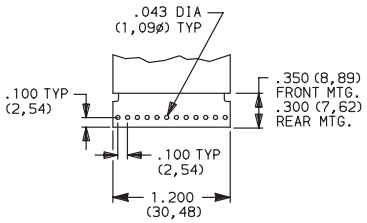

1 TYPE 1, EXTENDED TYPE 0

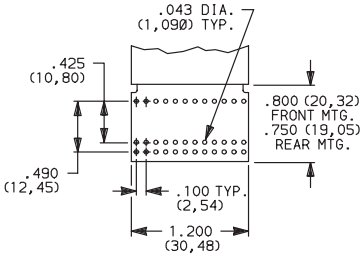

Signal traces cut except for common(s).

N SOLDER PINS WITH .100" SPACING

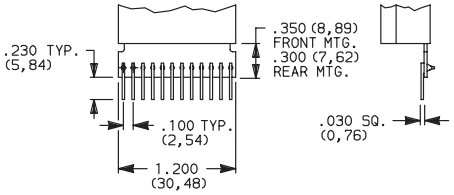

P SOLDER PINS WITH .156" SPACING

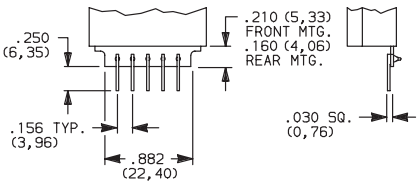

PC Board 1/32" (0,79) thick.

6 TYPE 6, NO PINS

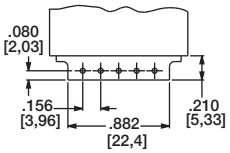

9 ANY COMBINATION OF TERMINATION CONFIGURATIONS OR SPECIAL TERMINATIONS.

Specify on configuration form, page M–10 and consult Customer Service Center.

NOTE: All terminal holes shown may not be present for all function codes, consult Customer Service Center. Terminal connector available for termination options 0 & 1, see page M–9.

NOTE: Termination option N (RoHS compliant) replaced termination option 3 (Non-RoHS compliant). Termination option P (RoHS compliant) replaced termination option B (Non-RoHS compliant).

Terminal Location Numbers

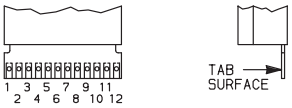

FIG. 1

FIG. 2

NOTE: See function codes, pages M–4 and M–5, for signal locations.

COLOR/MARKING/STOPS

0 MATTE BLACK HOUSING (Gloss black wheel with white characters; no stops.)

NOTE: Stop pins are available separately, see page M–8.

SEAL

0 UNSEALED SWITCHING CONTACTS.

1 SEALED SWITCHING CONTACTS. (Sealing is by means of an o-ring rotary seal and a cured-in-place elastomer gasket. Switching contact area is protected from moisture, oil, and airborne contaminants.)

2 DUST LENS. (Protects the character face of the wheel from abrasion and dirt).

3 SEALED SWITCHING CONTACTS AND DUST LENS

Dust Lens

Third Angle Projection

Dimensions are shown: Inches (mm)
Specifications and dimensions subject to change

AVAILABLE HARDWARE

Blank sections, Type 0, .315 THK.

PART NO.

413602000 W/RIB-BLACK

400502000 W/RIB & W/OUT SPRINGS-BLACK

Blank sections, Front mount, Type 0, .315 THK.

PART NO.

413502000 PLAIN-BLACK

400702000 PLAIN & W/OUT SPRINGS-BLACK

Blank sections, Rear mount, Type 1, .350 THK.

4006 4008

PART NO.

400602000 W/RIB-BLACK

400802000 PLAIN-BLACK

Blank sections, Rear mount, Type 2, .350 THK.

4734 4733

PART NO.

473402000 W/RIB-BLACK

473302000 PLAIN-BLACK

End plates, Front mount, Type 0

PART NO.

413402000 BLACK

Two required for complete assembly.

End plates, Rear mount, Type 1

PART NO.

400402003 BLACK

Two required for complete assembly.

End plates, Rear mount, Type 2

PART NO.

473202003 BLACK

Two required for complete assembly.

Spacers, Front mount, Type 0 & 3, .078 THK. (Makes section pitch 10mm)

PART NO.

410802000 BLACK

Stop pins

PART NO.

402900000

Dimensions are shown: Inches (mm)
Specifications and dimensions subject to change

AVAILABLE HARDWARE

Terminal connector

605A00000

605A02000

PART NO.

605A00000 PC
605A02000 SOLDER LUG

Fits 0 & 1 terminations only.

Screws for field assembly of thumbwheel switches
(2 screws needed per assembly + 403500000 nuts)

SCREW PART NUMBER (0-80 UNF THD. SIZE)	NUMBER OF SECTIONS IN ASSEMBLY	
	FRONT MOUNTING	REAR MOUNTING
	MTG. STYLE – 00	MTG. STYLE – 10
412700000	1–2	1–2
412701000	3–4	3
412702000	5–7	4–6

Nut

Two nuts required per assembly and screws.

PART NO.
403500000

Nut driver (For 403500000 nut)

PART NO.
406100652

Configuration Form

GRAY SHADED AREAS TO BE FILLED IN BY CUSTOMER SERVICE.

CATALOG PART NO. 3 _ _ _ _ _ _ _ _ _ — C&K PART NUMBER _ _ _ _ _

C&K PART NUMBER

COMPANY NAME _____

ADDRESS _____ TEL.# _____

CUSTOMER CONTACT _____ DATE _____

ORIGINATED BY _____ SALES REP. _____

CUSTOMER PRINT REVISION:

DETAILS:

THUMBWHEEL SECTIONS	NO. OF SEC.	FUNCTION CODE – TERMINATIONS – COLOR/MARKING/STOPS/SEAL – ILLUMINATION ENTER OPTION CODES IN APPROPRIATE BOXES. FUNCTION CODES INCLUDE BLANK SECTIONS (SEE PAGES M-9 & M-10).	DESCRIBE IN APPROPRIATE ROW
1	1	3 – _ _ – – _ _ _ _	
2	2	3 – _ _ – – _ _ _ _	
3	3	3 – _ _ – – _ _ _ _	
4	4	3 – _ _ – – _ _ _ _	
5	5	3 – _ _ – – _ _ _ _	
6	6	3 – _ _ – – _ _ _ _	
7	7	3 – _ _ – – _ _ _ _	
8	8	3 – _ _ – – _ _ _ _	
9	9	3 – _ _ – – _ _ _ _	
0	10	3 – _ _ – – _ _ _ _	
1	11	3 – _ _ – – _ _ _ _	

QUALITY CONTROL INSTRUCTIONS

PRODUCTION APPROVAL DATE

Q.C. APPROVAL DATE

REV. INITIALS DATE

FOR SWITCHES WITH MORE THAN 11 SECTIONS, CONTINUE ON ADDITIONAL SHEETS.

SPECIAL INSTRUCTIONS OR SPECIFICATIONS:

SHEET _____ OF _____

Design Features of C&K Smart Card Connectors

C&K Components has a successful track record of manufacturing innovative interconnect devices with a strong emphasis on reliability and flexibility. As a long established supplier of such devices for Smart Cards in a wide range of applications, we have extensive experience matching performance with the need to remain cost sensitive. We consider the true cost of the interconnect to be a function not just of price, but also the ease with which the device can be integrated into the customer's production process and its performance in the field. We have built in a number of features which set our products apart, such as:

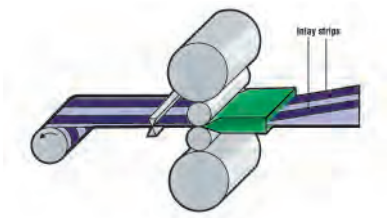

Inlay contact finish

A means of applying precious metal to the contact area utilizing pressure as opposed to conventional plating. We have found this to be the most durable finish available without compromising the electrical performance of the contact. Our research has shown that our inlay finish lasts over ten times as long as standard gold plating. Where we state the life of the precious metal this is intended to be the “worst case” scenario, because the test has been made using the most abrasive smart card that we can find on the market (given that the equipment maker can rarely control which smart cards are used). Note that the inlay finish is silver in color, being an alloy of gold, silver, and palladium.

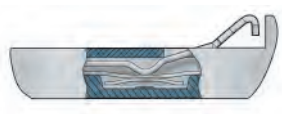

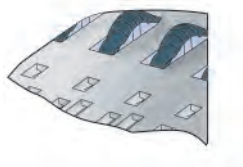

Contact design

The geometry of the contact has an important bearing on its electrical performance. Our contacts are designed to give an efficient wiping action and to maximize the stress between contact and card, thus minimizing the contact resistance. The “spooned” contact area is also shaped so as to protect it from damage during card insertion.

Card detection switches

As a manufacturer of switches as well as interconnects, we have been able to integrate high performance dome switches into many of our devices. These are variants of switch products which are already in high volume production as stand alone components.

PCI (security standard for POS applications)

Two levels of PCI compatibility level are available:

PCI ready:

Specific features are designed in the connector in order to ease the integration of security devices around and below the connector.

PCI:

Additional accessories are integrated on the connector in order to avoid access to the data contacts and to detect any connection attempt.

Mechanical robustness

Four metal pegs, to be soldered in PCB metalized holes at the same time than the SMT terminals, have been designed on the smart card connectors in order to increase the resistance of the connector to card insertion force. This participates to the life time and to the overload resistance.

Materials

The contact material has been chosen because of its resistance to atmospheric pollution, solderability and performance over time in giving a consistent normal force. Since all of our new interconnects are designed for surface mounting, the plastic materials used must withstand high temperature soldering processes without deforming or adversely affecting performance.

FULL SIZE CARD CONNECTORS

Series	**CCM01**	**CCM02**	**CCM04**	
Applications	Professional	Professional	Consumer/Professional	
PCI*	PCI ready	PCI/PCI ready		
EMV	•	•		
Insertion force	40N max	40N max	10N max	
Overload	250N	180N	40N	
Card guide	•	•		
Sealed switch	•	•		
Operating life	100,000 cycles	500,000 cycles	>50,000 cycles	
Contact plating	inlay	inlay	gold	
Number of contacts	8	8	6 or 8	
Contact type	friction	friction	friction/vandal proof	
Page No.	7	12	17	

SIM / SAM CARD CONNECTORS

Series	**CCM03**	**CCM04**	
Applications	Consumer/Professional	Consumer/Professional	
Cover	hinged / fixed	hinged / fixed	
Operating life	10,000 to 50,000 cycles	30,000 cycles	
Sealed switch	•		
Contact plating	inlay / gold	inlay / gold	
Card end travel switch	with / without	without	
Number of contacts	6 or 8	6 or 8	
Page No.	24	43	

* PCI

PCI ready: specific features are designed into the connector in order to ease the integration of security devices around and below the connector.

PCI: specific additional accessories are integrated on the connector in order to avoid acess to the data contacts and to detect any connection attempt.

Specifications and dimensions subject to change

www.ck-components.com

C&K

Full Size Cards

Features

- *Operating life up to 100,000 cycles*
- *40N card insertion force*
- *EMV*
- *PCI ready*
- *Card detection sealed switch*

Typical Applications

- *Transaction*
- *Identification*
- *POS*

Mechanical

Number of Contacts	8
Mechanical life	Up to 500,000 cycles
Card insertion force	40N max.
Card extraction force	1 N min / 10 N max
Contact force	0,2N / 0,50 N max
Card detection switch	0,8 N max for actuation (end travel switch actuation force actuates when card is 0,9mm from card stop) 1,8 N max for complete depression
Vibration Frequency	10 to 500 Hz. Acceleration 50m/s^2 Duration 6 hours - amplitude 0,35mm
Max elect. discontinuity	1µs
Shock	Peak value 500 m/s^2 – Duration 11 ms 3 shocks in each direction of each axis

Packaging

Tray 30 parts / Cartons 300 parts
Reel 200 parts / Cartons 1,000 parts

Soldering

Compatible with lead free SMT reflow soldering process

Contact Electrical Data

Insulation resistance	1,000 MΩ min
Resistance	100 mΩ max
Current rating	10 µA min / 1 A max
Dielectric strength	750 Vrms min

Switch Electrical Data

Card detection switch	Normally open
Contact resistance	100 mΩ max
Dielectric strength	250 Vrms min
Current rating	1 mA min / 10 mA max
Maximum power	0.2 VA

Environmental Data

Operating temperature	-40°C to +85°C
Damp heat	IEC 512 test number 11c (10 days)
Salt mist	IEC 512 test number 11f (96 hours)
Card detection switch	Sealed against dust
RoHS compliant	

Designation	Termination	Operating Life	Card Insertion Force
CCM01-2027LFT	SMT	100,000 cycles	40N

CCM01 MK2 Series

CCM01-2027 LFT

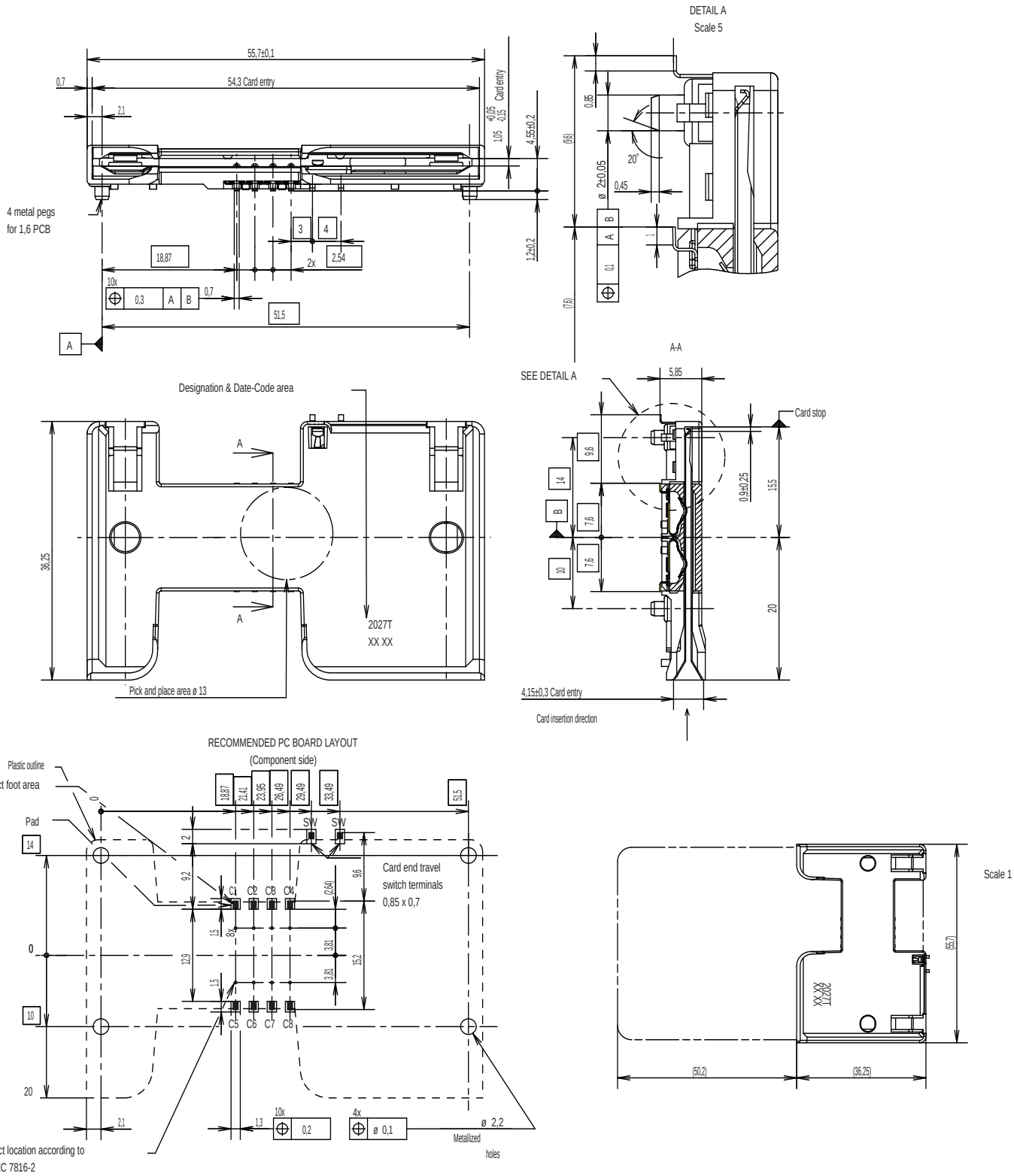

Features/Benefits

- *Operating life 500,000 cycles*
- *Low profile 4 mm and 3.2 mm height*
- *PCI ready*
- *Card detection sealed switch*

Typical Applications

- *Transaction*
- *Identification*
- *POS*
- *MPOS*

Mechanical

NUMBER OF CONTACTS:	8
MECHANICAL LIFE:	500,000 cycles
CARD INSERTION FORCE:	10 N max.
CARD EXTRACTION FORCE:	1 N min. / 10 N max.
CONTACT FORCE:	0,2 N / 0,60 N max.

Packaging

Tray 25 parts or Reel 350 parts

Soldering

Compatible with lead free SMT reflow soldering process

Contact Electrical Data

INSULATION RESISTANCE:	1,000 M Ω min.
CONTACT RESISTANCE:	100 m Ω max.
CURRENT RATING:	10 µA min. / 1A max.
DIELECTRIC STRENGTH:	750 Vrms min.

Switch Electrical Data

CARD DETECTION SWITCH:	Normally open
CONTACT RESISTANCE:	100 m Ω max.
DIELECTRIC STRENGTH:	250 Vrms min.
CURRENT RATING:	1 mA min. / 10 mA max.
MAXIMUM POWER:	0.2 VA

Environmental Data

OPERATING TEMPERATURE:	-40˚C to + 85˚C
CARD DETECTION SWITCH:	Sealed against dust

RoHS compliant

How To Order

To order, simply select desired option from each category and place in the appropriate box. For additional options not shown in catalog, consult our Customer Service Center.

C C M 0 1 - 2 [ ] [ ] [ ] L F T [ ] [ ] [ ] [ ] [ ]

Cover Material
- **5** Plastic, 4.0 mm height
- **6** Metal, 3.2 mm height
- **7** Plastic, I/O

Contact Tail on PCB
- **0** Short, recessed (best for PCI)
- **1** Long (accessible, easy rework)
- **2** Long + 2 metal pegs (40 N overload)
- **3** Short, no pegs

ESD Protection
- **3** Full ESD protection (card edge & IC)
- **4** Card edge ESD (only for metal version)
- **5** Low cost ESD (card edge for plastic cover)

Lead Free RoHS
- **LFT** Tin plated termnals

Packaging
- **T25** Pack tray 25 parts
- **R351** Pack reel 350 parts

- **NONE** Leave blank
- **AE** only applicable with metal pegs option (CCM01-2x2x)

First Angle Projection

Dimensions are shown in mm
Specifications and dimensions subject to change

CCM01 MK5 Series

CCM01-2604 LFT T25

Metal cover, short tails

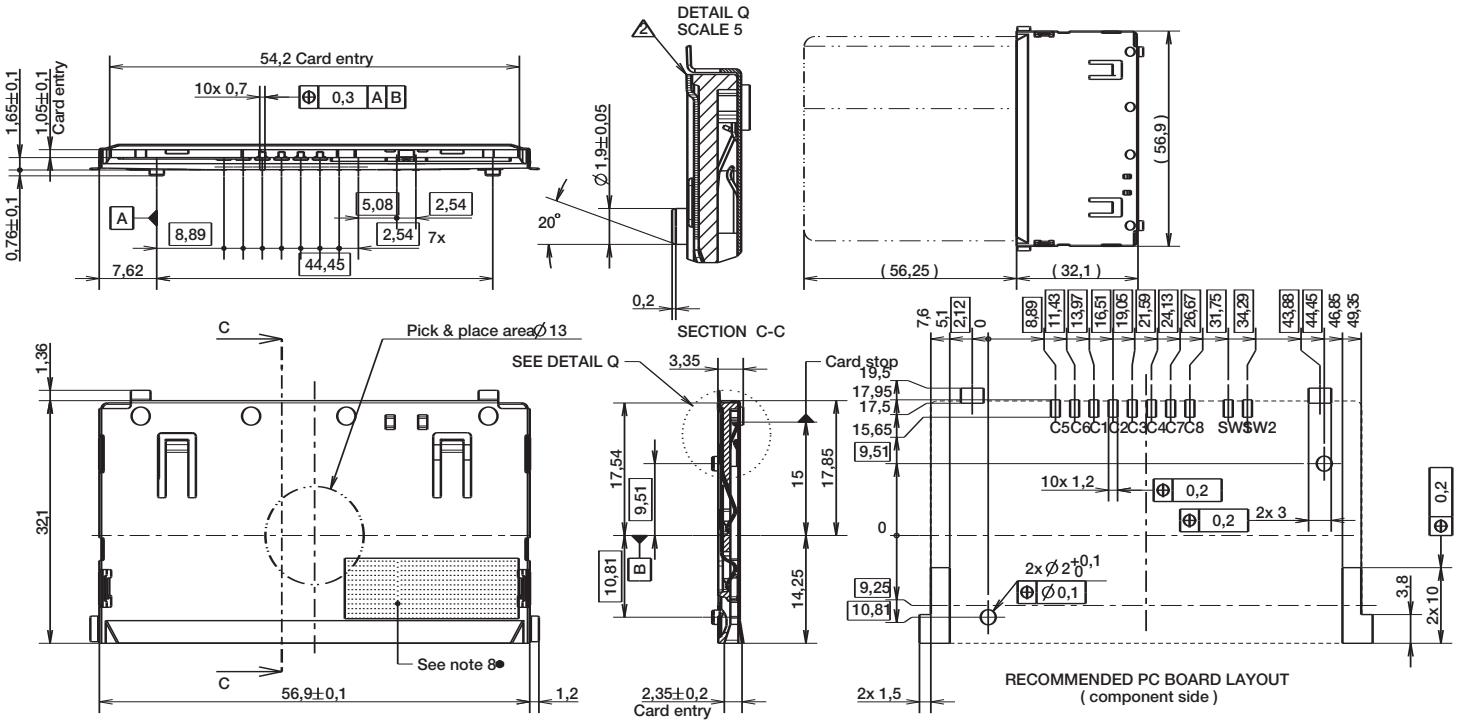

CCM01-2513 LFT T25

Plastic cover, long tails, full ESD protection

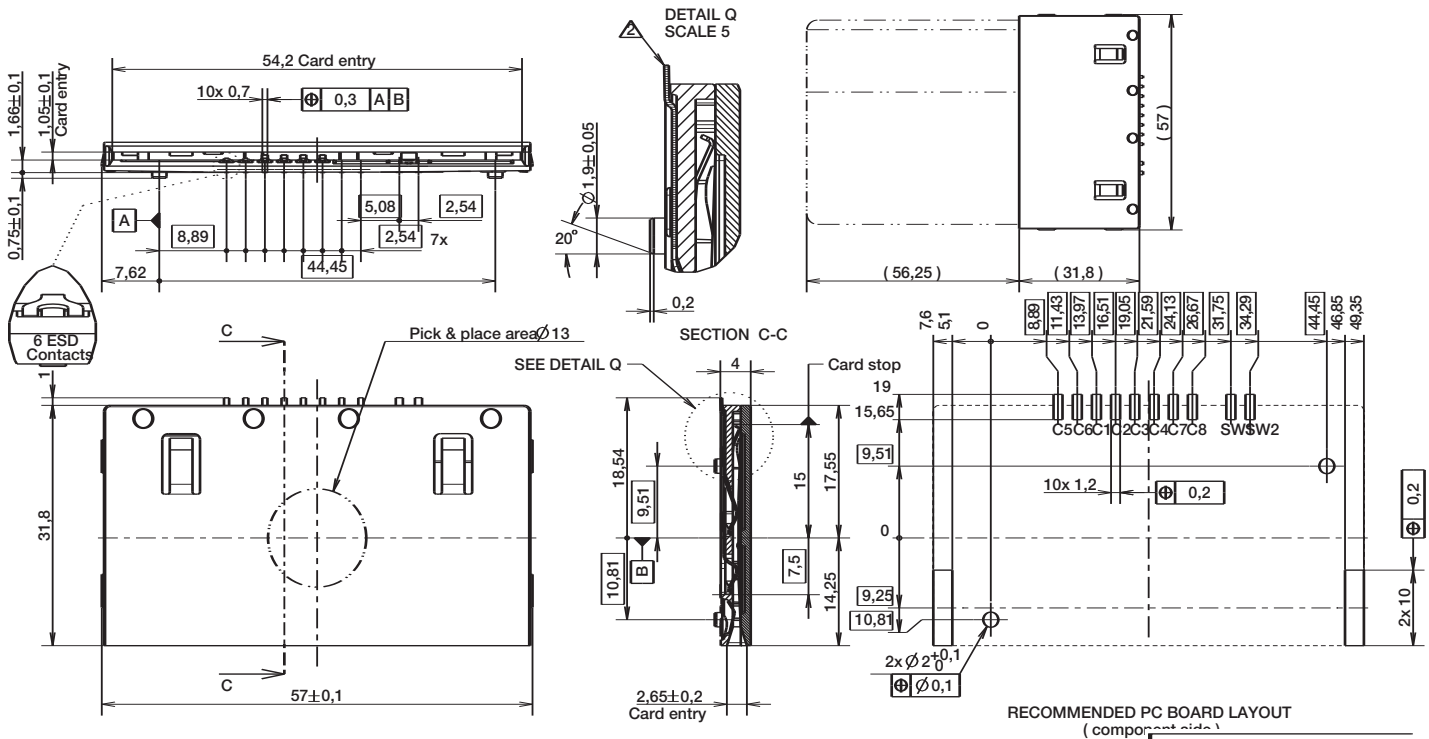

First Angle Projection

Dimensions are shown in mm
Specifications and dimensions subject to change

CCM01-2523 LFT T25

Plastic cover, long tails, metal pegs

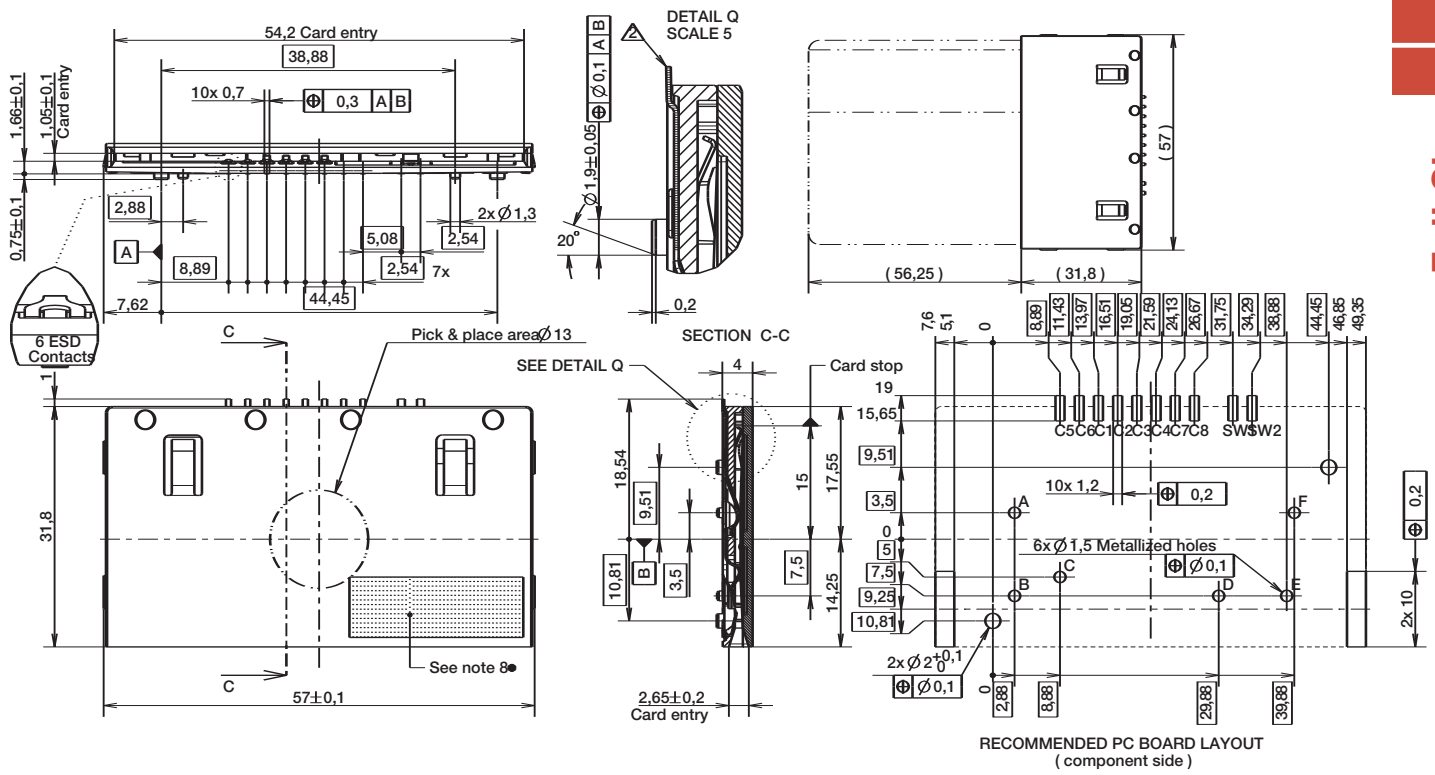

CCM01-2614 LFT T25

Metal cover, long tails, no ESD protection

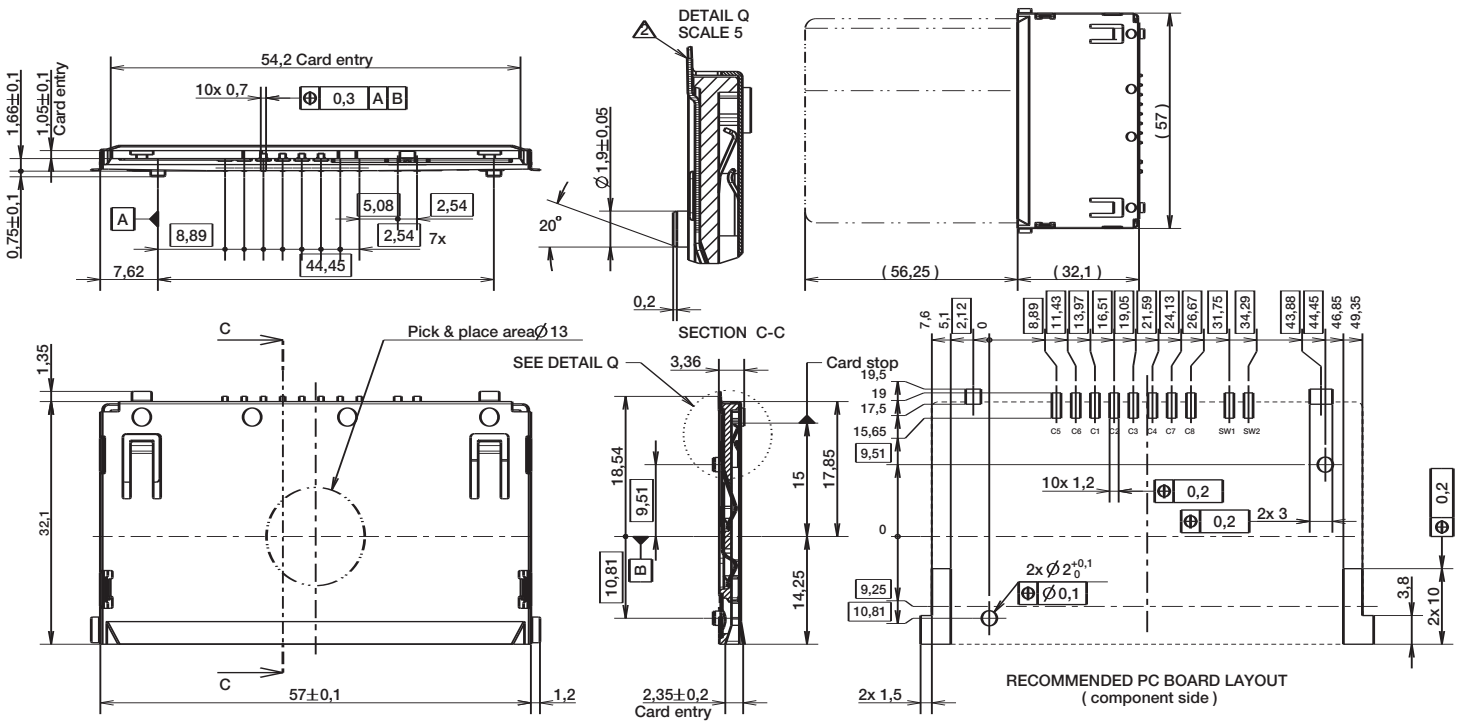

First Angle Projection

Dimensions are shown in mm
Specifications and dimensions subject to change

CCM02 MK2 Series

Full Size

Features

- *Operating life 500,000 cycles*
- *Insertion force 40N*
- *EMV*
- *PCI & PCI ready*
- *Card detection sealed switch*

Typical Applications

- *Transaction*
- *Identification*
- *POS*

Mechanical

Number of Contacts	8
Mechanical life	500,000 cycles min
Card insertion force	10N to 40N
Card extraction force	1N min / 10N max
Contact force	0,2N / 0,50N max
Card detection switch	0,8 N max for actuation (end travel switch actuation force actuates when card is 0,9mm from card stop) 1,8 N max for complete depression
Vibration Frequency	10 to 500 Hz. Acceleration 50m/s² Duration 6 hours - amplitude 0,35mm
Max elect. discontinuity	1µs
Shock	Peak value 500 m/s² – Duration 11 ms 3 shocks in each direction of each axis

Packaging

Tray 30 parts / Cartons 300 parts
Reel 120 parts

Soldering

Compatible with lead free reflow soldering process
For version with security cover, please contact Customer Service for soldering recommendations.

Contact Electrical Data

Insulation resistance	1,000 MΩ min
Resistance	100 mΩ max
Current rating	10 µA min / 1 A max
Dielectric strength	750 Vrms min

Switch Electrical Data

Card detection switch	Normally open
Contact resistance	100 mΩ max
Dielectric strength	250 Vrms min
Current rating	1 mA min / 10 mA max
Maximum power	0.2 VA

Environmental Data

Operating temperature	-40°C to +85°C
Damp heat	IEC 512 test number 11c (10 days)
Salt mist	IEC 512 test number 11f (96 hours)
Card detection switch	Sealed against dust
RoHS compliant	

			PCI Features				
Designation	**Termination**	**Contact Type**	**I/O Protect**	**Security Cover**	**Total Height (mm)**	**Dimension**	**PCB version**
CCM02-2503LFT	THT	landing			6,25	38,5 X 55,6	4 clips
CCM02-2504LFT	SMT	landing			6,25	38,5 X 55,6	4 clips
CCM02-F503LFT	THT	friction			6,25	38,5 X 55,6	4 clips
CCM02-F504LFT	SMT	friction			6,25	38,5 X 55,6	4 clips
CCM02-F844LFT	SMT	friction	Yes	Yes	6,6	40,5 X 58	4 metal pegs

PCI: I/O Protect

Definition

Special accessory in order to avoid and detect frontal access to data contact. It is electrically connected to the PCB through spring finger contacts.

Process

It must be in open position during the reflow soldering of the connector and has to be locked in closed position after soldering.

I/O Protect locking tool

C&K is proposing a manual tool to lock the I/O protect accessory after soldering.
Ordering code: C-CM02-E50

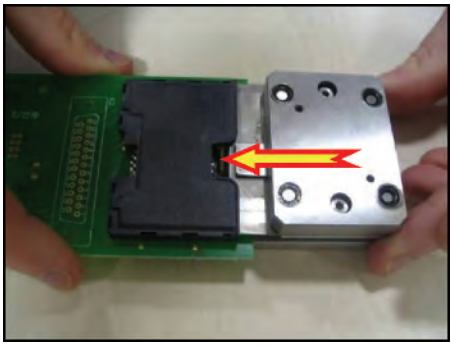

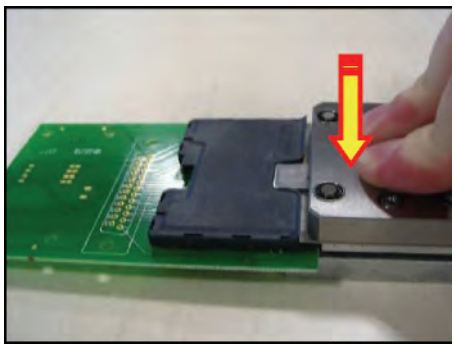

PCI: Security Cover

Definition

It is a multilayer cover placed over the connector to avoid and detect data contact access, especially from the top. It is connected to the PCB through 6 SMT terminals that are soldered at the same time as the other smart card terminals.

Process

Please contact your Sales Representative for advice and recommendations about soldering this version.

CCM02 MK2 Series

CCM02-2503 LFT / CCM02-F503 LFT

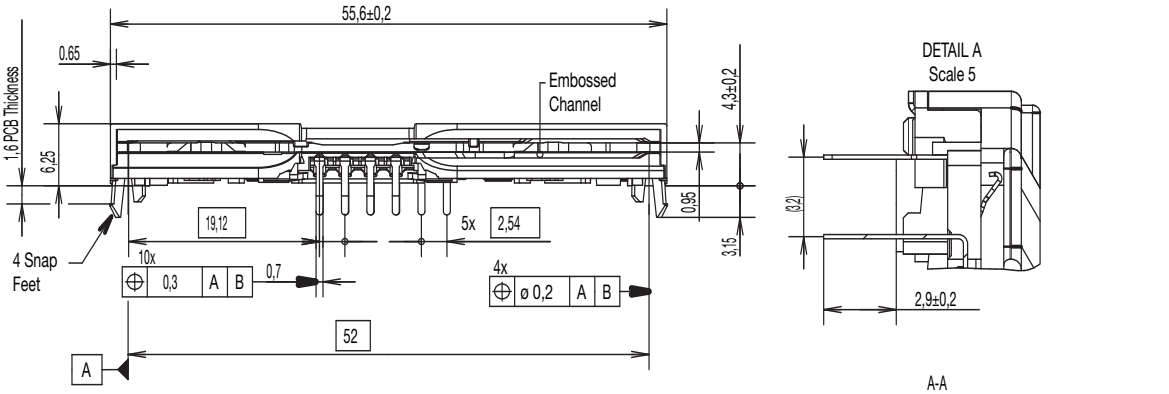

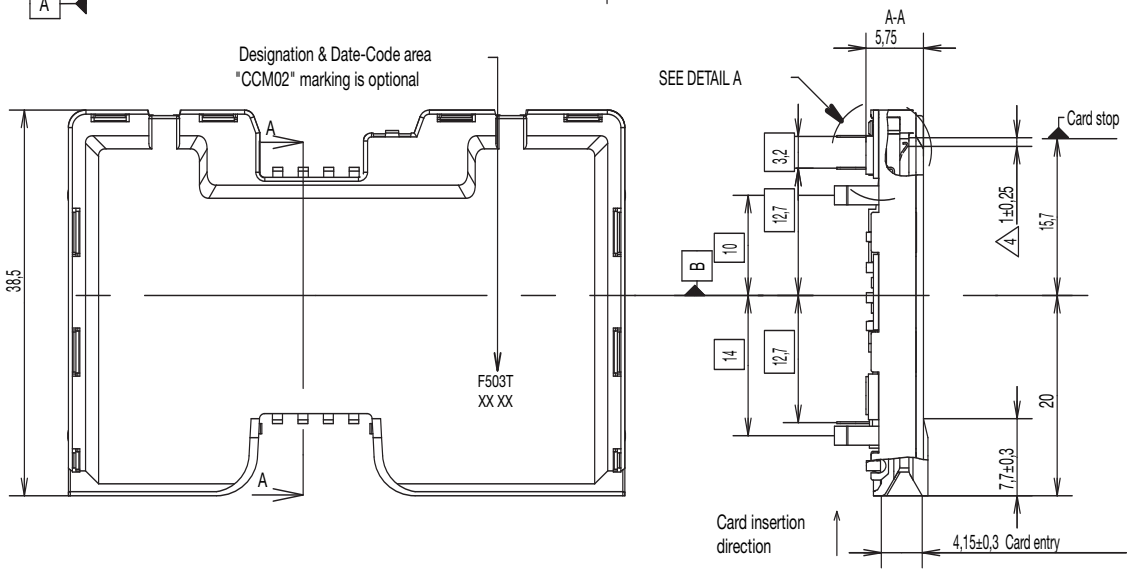

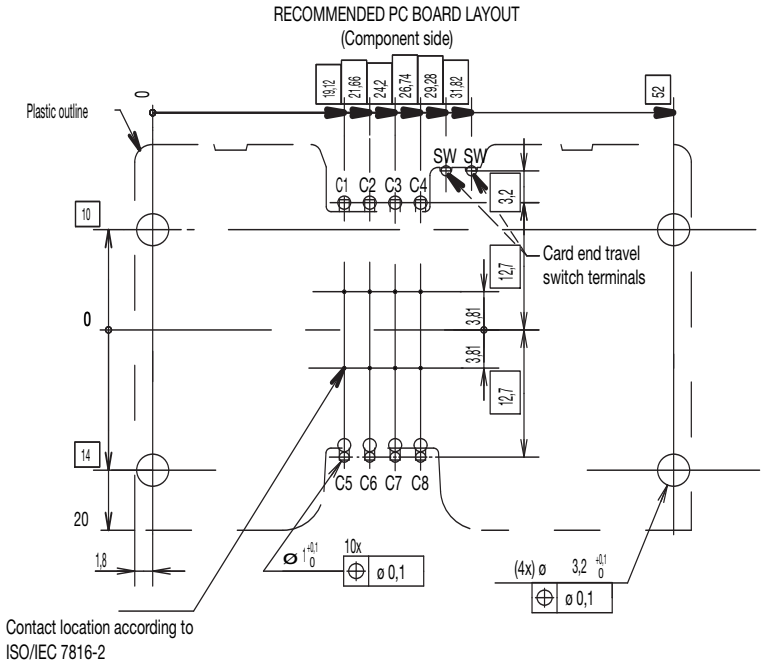

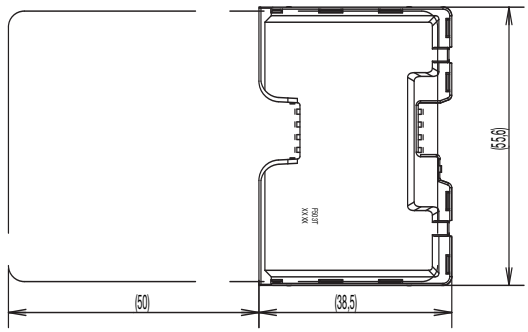

First Angle Projection

Dimensions are shown in mm
Specifications and dimensions subject to change

CCM02-2504 LFT / CCM02-F504 LFT

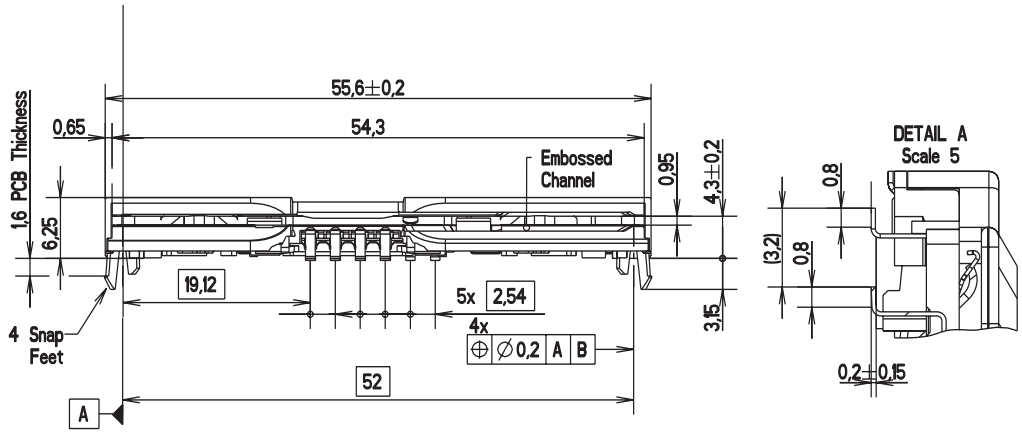

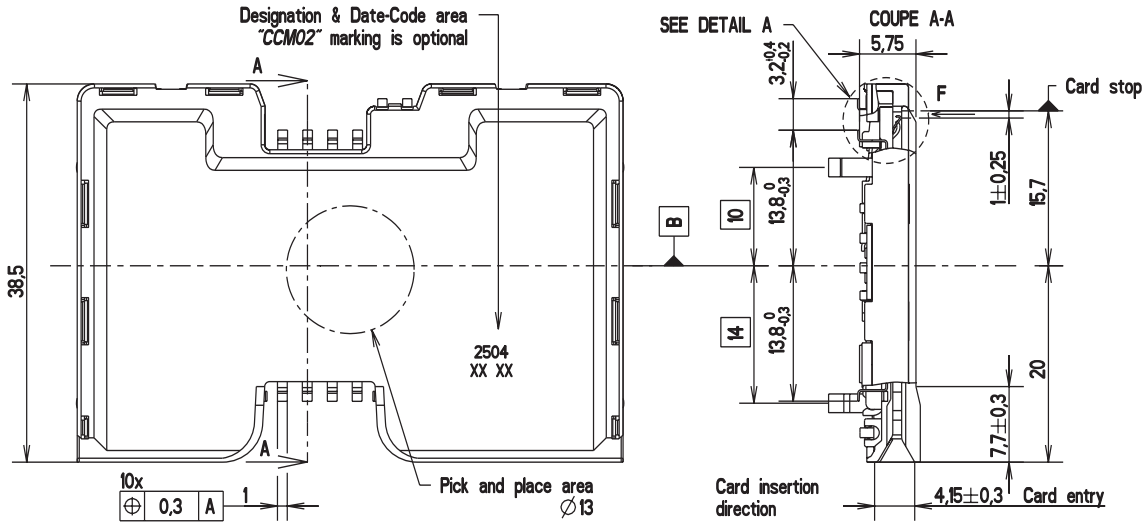

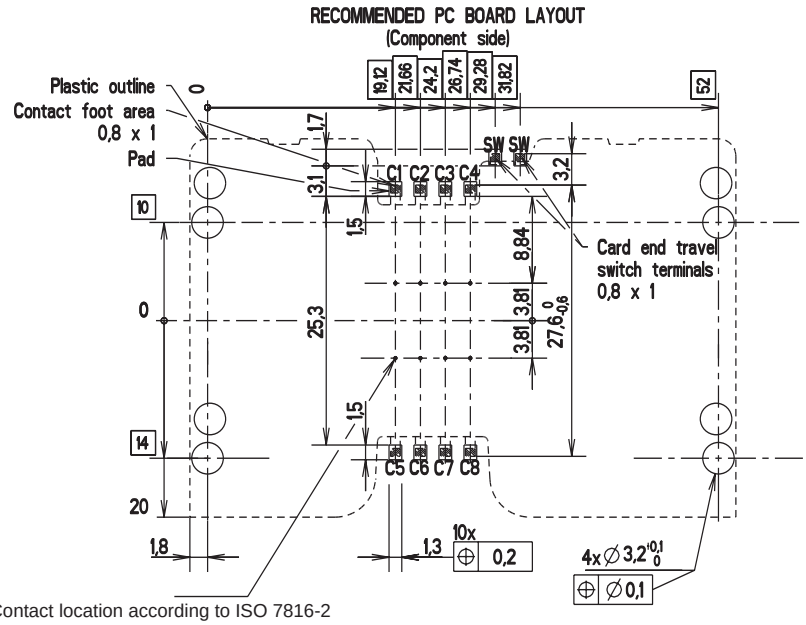

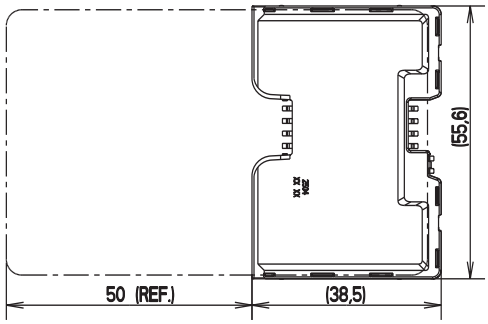

First Angle Projection

Dimensions are shown in mm
Specifications and dimensions subject to change

CCM02 MK2 Series

CCM02-F844A LFT / CCM02-F844B LFT

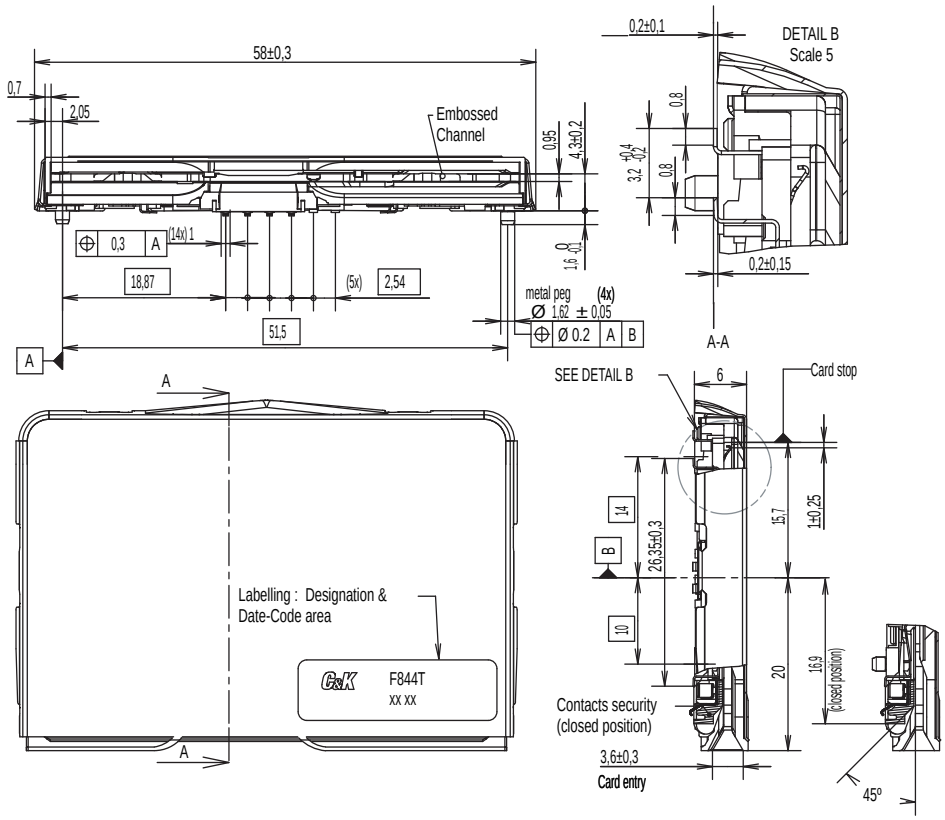

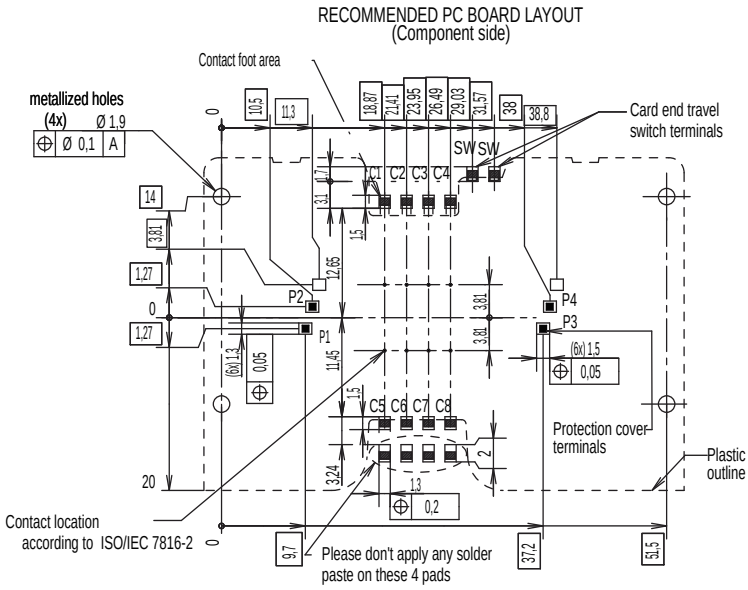

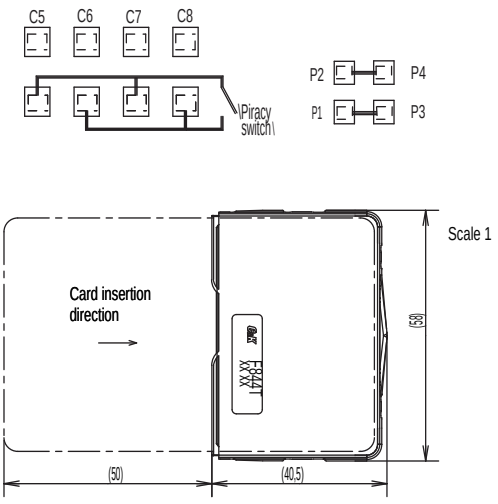

First Angle Projection

Dimensions are shown in mm
Specifications and dimensions subject to change

Features

- ***ID1 full size card acceptance***
- ***Card detection sealed switch***
- ***Compatible with pick and place and lead free soldering***

Typical Applications

- ***Transaction***
- ***POS***
- ***Identification***

Mechanical

Number of contacts	6 or 8
Mechanical life	50,000 cycles
Card insertion force	10N max
Card extraction force	1N min / 10N max
Contact force	0,4N to 0,7N
Card detection switch	0,8 N max for actuation (end travel switch actuation force actuates when card is 0,9mm from card stop) 1,8 N max for complete depression
Vibration Frequency	10 to 500 Hz. Acceleration 50m/s^2 Duration 6 hours - amplitude 0,35mm
Shock	Peak value 500 m/s^2 – Duration 11 ms 3 shocks in each direction of each axis
Max elect. discontinuity	1µs

Packaging

See table below

Soldering Process

Compatible with lead free SMT reflow soldering process

Contact Electrical Data

Insulation resistance	1000 MΩ min
Contact resistance max	100 mΩ max
Switching current	10 µA min / 1 A max
Dielectric strength	750 Vrms min

Switch Electrical Data

Card detection switch	Normally open
Rc card detection switch	100 mΩ max
Dielectric strength	250 Vrms min
Switch current rating	1 mA min / 10 mA max
Maximum switch power	0.2 VA

Environmental Data

Operating temperature	-40°C to +85°C
Salt mist	IEC 512 test number 11f (96 hours)
Damp heat	IEC 512 test number 11c (10 days)
Card detection switch	Sealed against dust
RoHS compliant	

Designation	Housing Type	# of Contacts	Contact Force	Total Height (mm)	Total Dim. (mm)	Packaging
CCM04-5427LFT	standard	8	0,4N to 0,7N	2,65	18,75 X 25	reels of 1,000 pcs
CCM04-5436LFT	standard	8	0,4N to 0,7N	0,90	18,75 X 26,9	reels of 1,000 pcs
CCM04-5468LFT	stand-off	8	0,4N to 0,7N	3,5	18,75 X 24	reels of 1,000 pcs
CCM04-5454LFT	standard	8	0,4N to 0,7N	0,90	18,75 X 26,9	reels of 1,000 pcs
CCM04-5455LFT	standard	8	0,4N to 0,7N	0,90	18,75 X 26,9	reels of 1,000 pcs

CCM04 MK4 Series

CCM04-5427 LFT

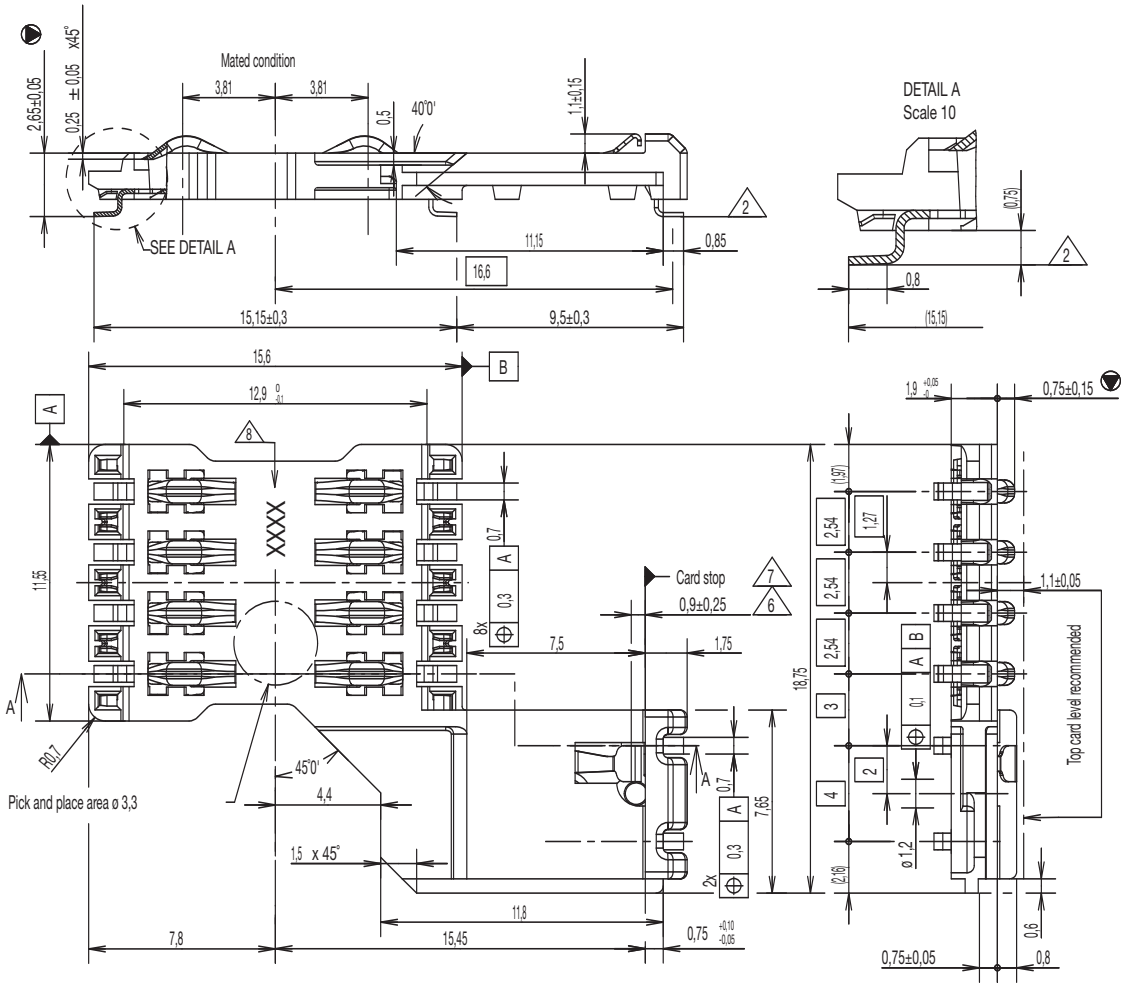

RECOMMENDED PC BOARD LAYOUT
(Component side)

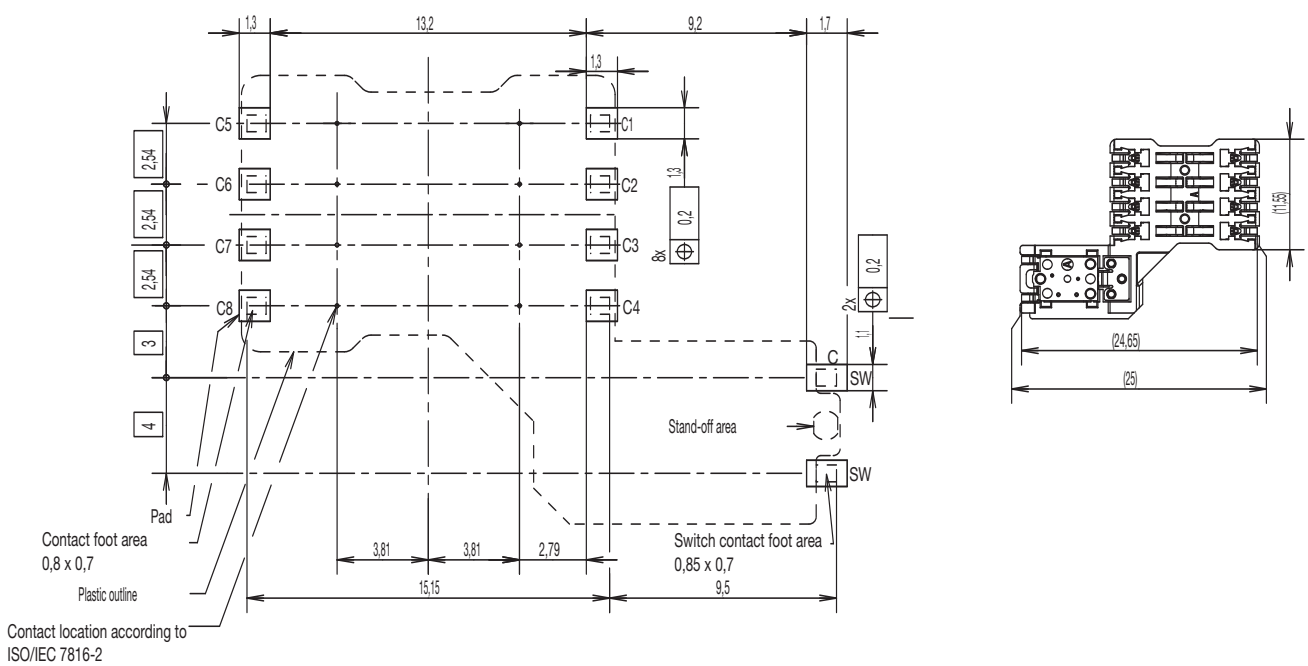

CCM04-5436 LFT

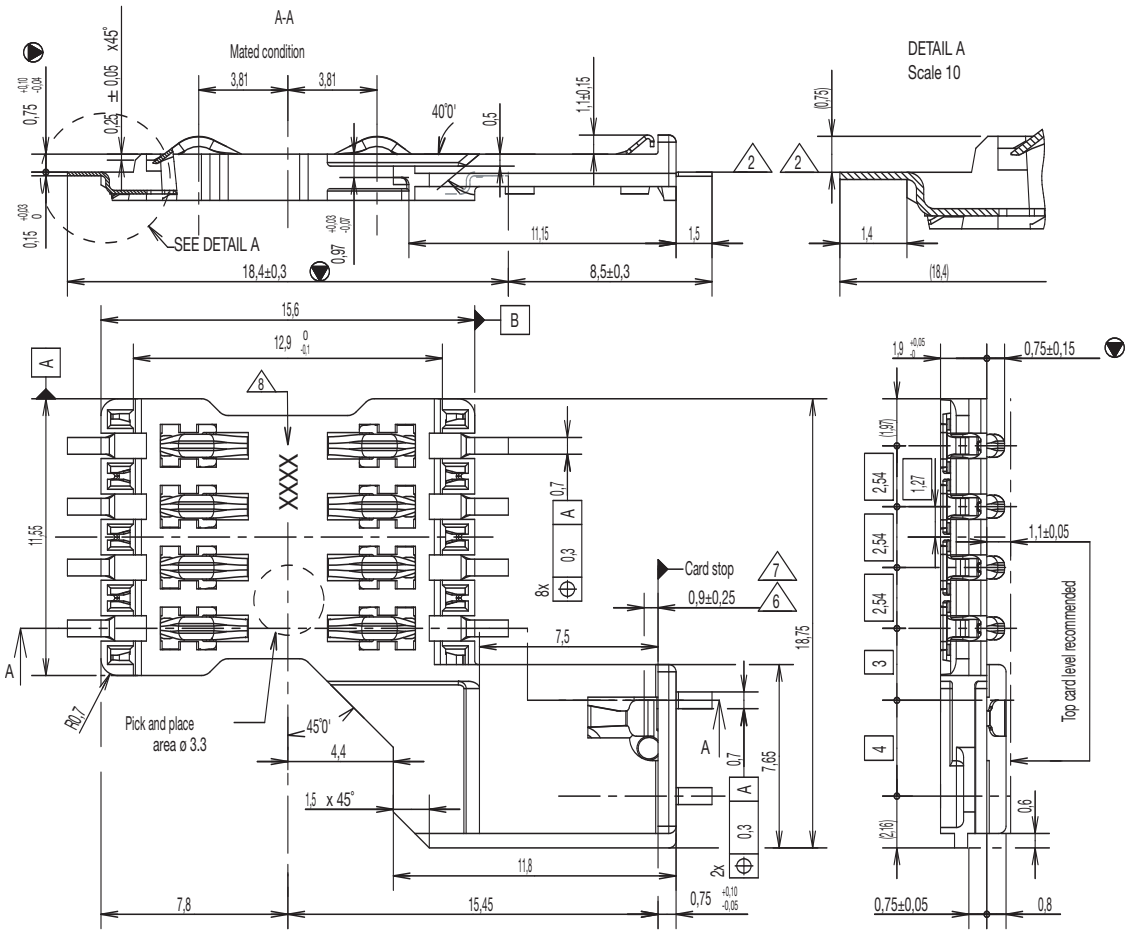

RECOMMENDED PC BOARD LAYOUT
(Component side)

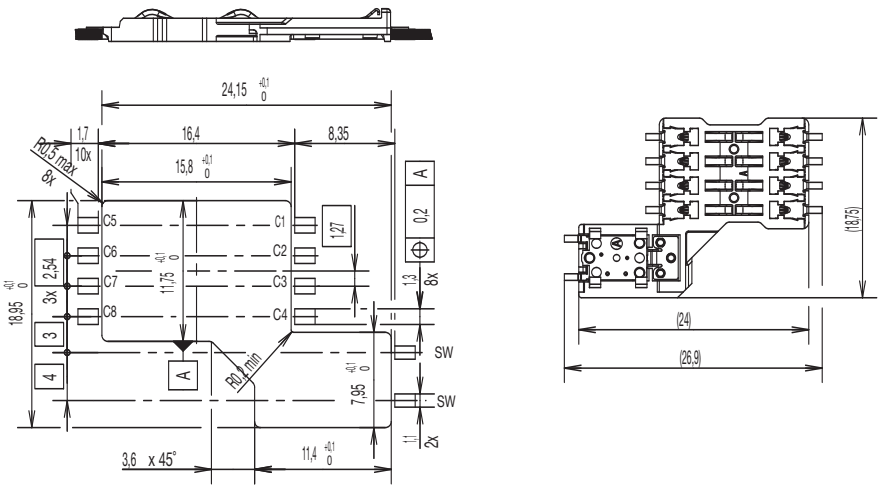

First Angle Projection

Dimensions are shown in mm
Specifications and dimensions subject to change

CCM04 MK4 Series

CCM04-5468 LFT

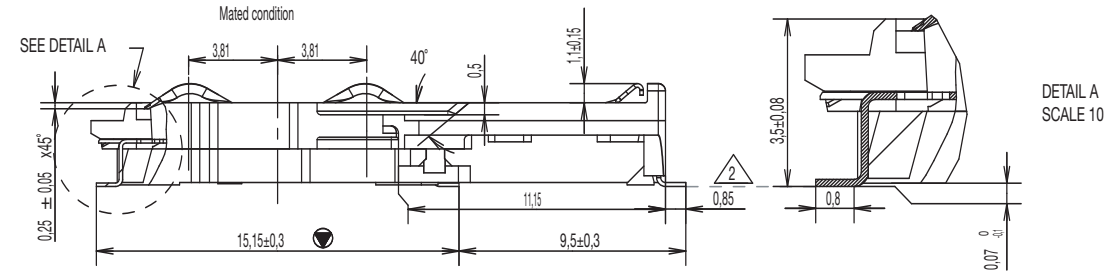

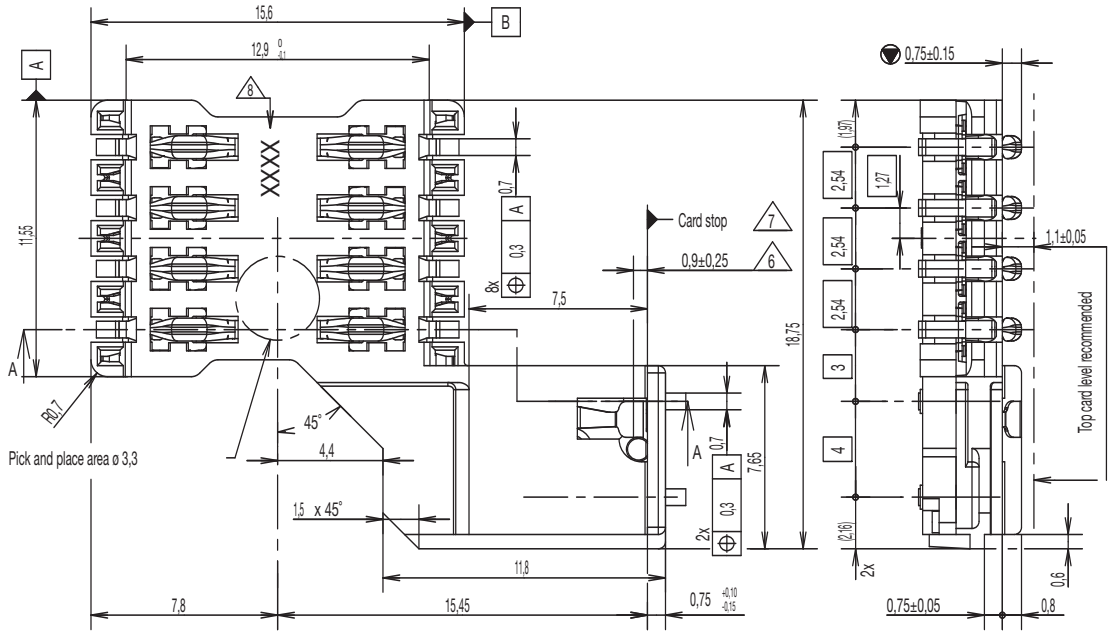

RECOMMENDED PC BOARD LAYOUT
(Component side)

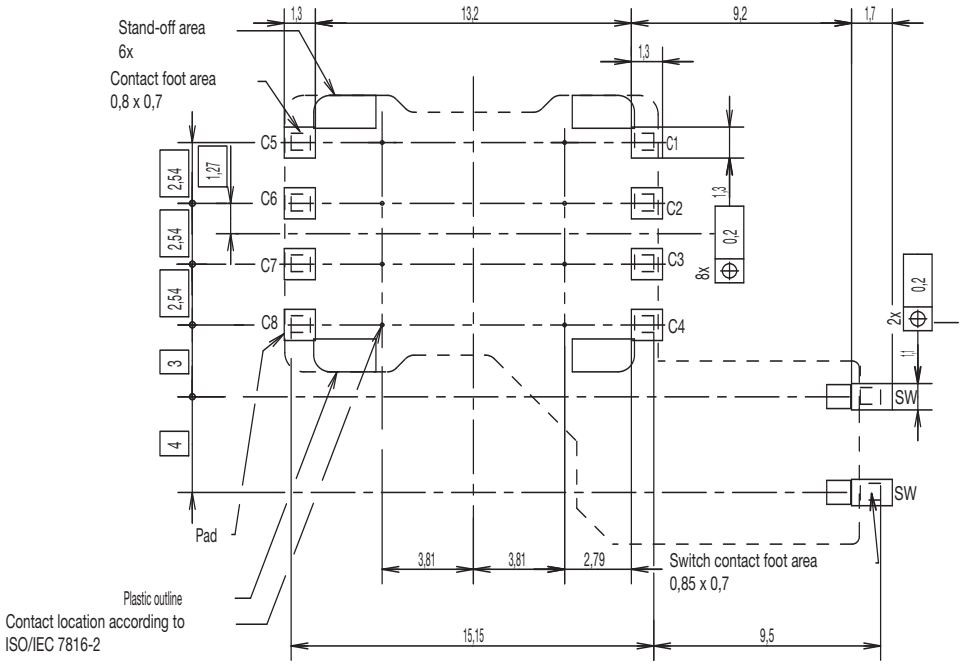

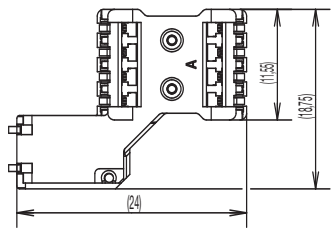

First Angle Projection

Dimensions are shown in mm
Specifications and dimensions subject to change

CCM04-5454 LFT

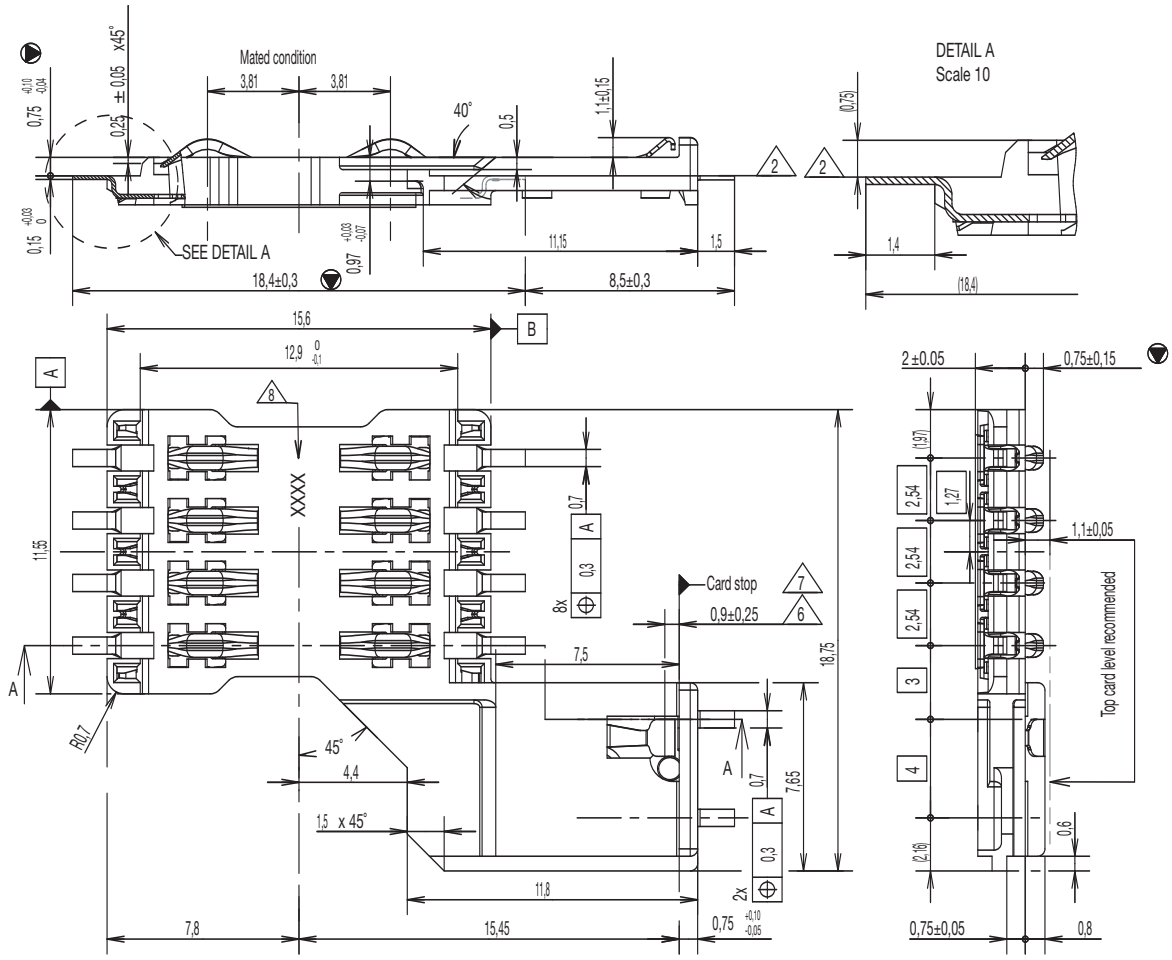

RECOMMENDED PC BOARD LAYOUT
(Component side)
Scale 2,5

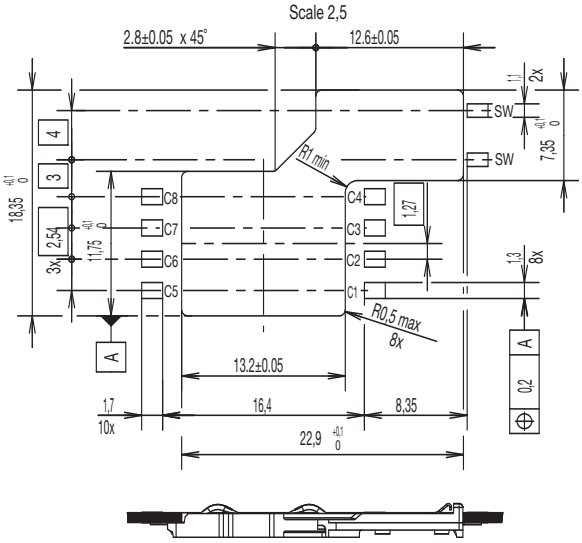

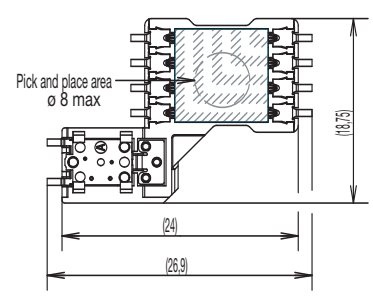

First Angle Projection

Dimensions are shown in mm
Specifications and dimensions subject to change

CCM04 MK4 Series

CCM04-5455 LFT

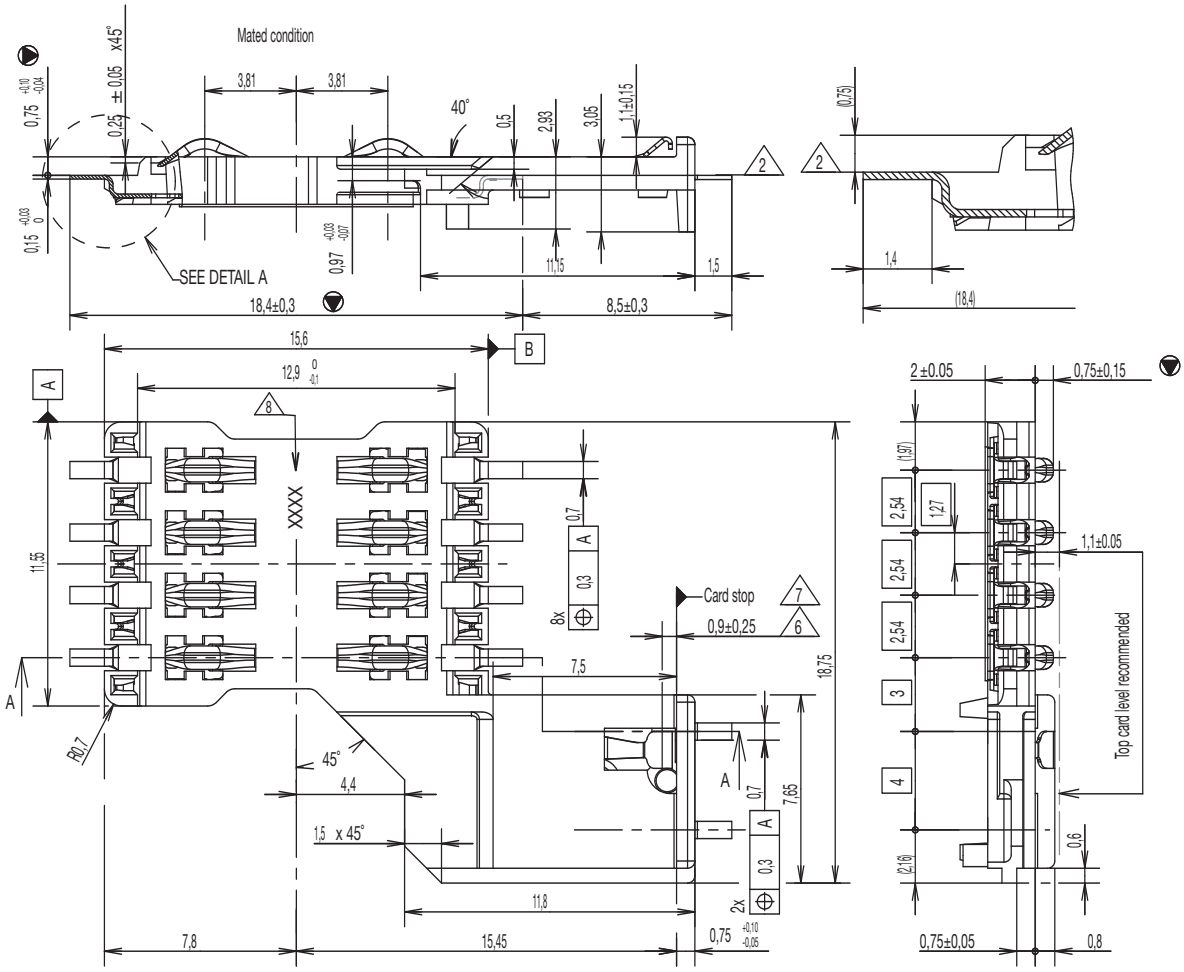

RECOMMENDED PC BOARD LAYOUT
(Component side)
Scale 2,5

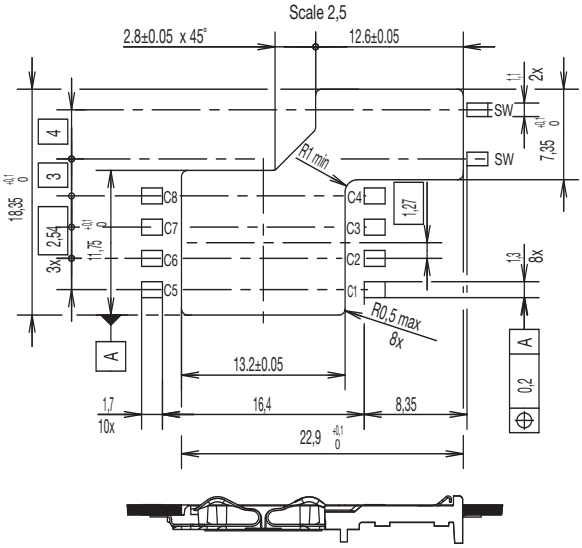

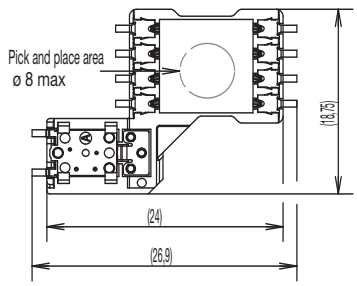

First Angle Projection

Dimensions are shown in mm
Specifications and dimensions subject to change

SIM / SAM Cards

CCM03 MK2 Series

Features

- ***SIM/SAM card acceptance***
- ***Hinged and fixed covers***
- ***Compatible with pick and place and lead free soldering***

Typical Applications

- ***Handheld products***
- ***Identification***
- ***POS***
- ***Automotive***

Mechanical

Number of Contacts	6 or 8
Mechanical life, hinged cover	10,000 cycles min
Mechanical life, fixed cover	50,000 cycles
Card insertion force	Hinged cover: 1N max Fixed cover: 3N max
Card extraction force	Hinged cover: 1N max Fixed cover: 0,80N min / 3N max
Contact force	0,25N min / 0,50N max
Slide locking force	2N min / 6N max 1,8N max. for complete depression
Vibration Frequency	10 to 500 Hz. Acceleration 50m/s^2 Duration 6 hours - amplitude 0,35 mm
Max electrical discontinuity	1µs
Shock	Peak value 500 m/s^2 – Duration 11 ms 3 shocks in each direction of each axis

Switch Electrical Data

Card detection switch	Normally open
Contact resistance	100 mΩ max
Dielectric strength	250 Vrms min
Current rating	1 mA min / 10m A max
Maximum power	0.2 VA

Environment Data

Operating temperature	-40°C to +85°C
Damp heat	IEC 512 test number 11c (10 days)
Salt mist	IEC 512 test number 11f (96 hours)
RoHS compliant	

Soldering Process

Compatible with lead free SMT soldering process

Contact Electrical Data

Insulation resistance	1,000 MΩ min
Resistance	100 mΩ max
Current rating	10 µA min / 1 A max
Dielectric strength	750 Vrms min

Designation	Contact Plating	Cover	# of Contacts	PCB Version	Card Presence Switch	Operating Life	Total Height (mm)	Dim. (mm)	Packaging
CCM03-3001LFT	inlay	hinged	6		without	10,000	2,55	17,2 x 29,65	reels of 1,000 pcs
CCM03-3002LFT	inlay	hinged	6	2 plastic pegs	without	10,000	2,55	17,2 x 29,65	reels of 1,000 pcs
CCM03-3003LFT	inlay	hinged	8		without	10,000	2,55	17,2 x 29,65	reels of 1,000 pcs
CCM03-3004LFT	inlay	hinged	8	2 plastic pegs	without	10,000	2,55	17,2 x 29,65	reels of 1,000 pcs
CCM03-3009LFT	gold	hinged	6		without	10,000	2,55	17,2 x 29,65	reels of 1,000 pcs
CCM03-3010LFT	gold	hinged	6	2 plastic pegs	without	10,000	2,55	17,2 x 29,65	reels of 1,000 pcs
CCM03-3011LFT	gold	hinged	8		without	10,000	2,55	17,2 x 29,65	reels of 1,000 pcs
CCM03-3012LFT	gold	hinged	8	2 plastic pegs	without	10,000	2,55	17,2 x 29,65	reels of 1,000 pcs
CCM03-3013LFT	gold	hinged	6		with	10,000	2,55	17,2 x 29,65	reels of 1,000 pcs
CCM03-3512LFT	gold	hinged	6	Large soldering pads*	without	10,000	2,55	17,2 x 29,65	reels of 1,000 pcs
CCM03-3504LFT	gold	fixed	8		without	50,000	2,85	17,2 x 25,5	reels of 1,000 pcs
CCM03-3505LFT	gold	fixed	6		without	50,000	2,85	17,2 x 25,5	reels of 1,000 pcs
CCM03-3754LFT	inlay	fixed	6		with	10,000	3,5	16,5 x 18,05	reels of 1,000 pcs
CCM03-3760LFT	inlay	fixed	6		without	10,000	3,45	16,5 x 15,85	reels of 1,000 pcs
CCM03-3764LFT	inlay	none	6		with	10,000	2,9	16,5 x 15,85	reels of 1,000 pcs

* Can go through reflow upside down

CCM03-3001 LFT / CCM03-3009 LFT

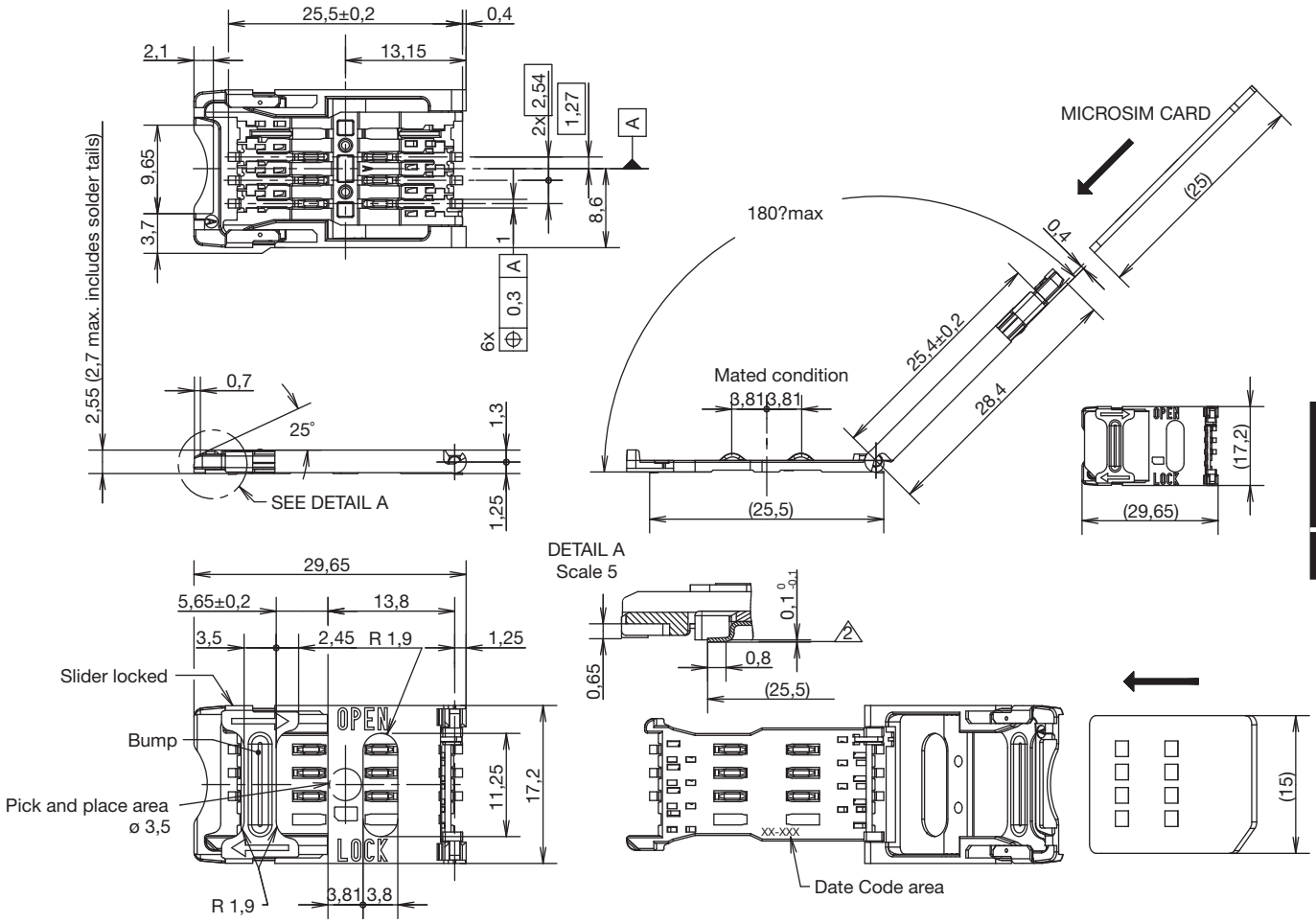

RECOMMENDED PC BOARD LAYOUT
(Component side)

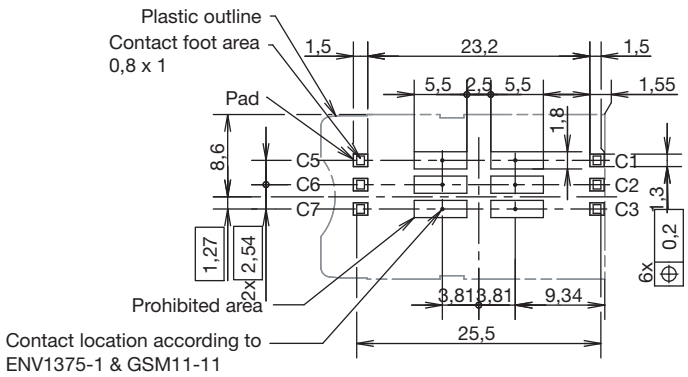

First Angle Projection

Dimensions are shown in mm
Specifications and dimensions subject to change

CCM03 MK2 Series

CCM03-3002 LFT / CCM03-3010 LFT

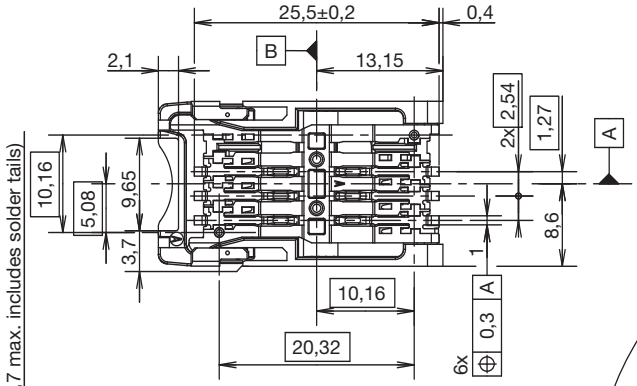

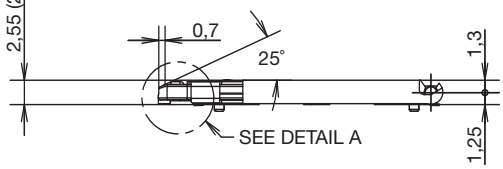

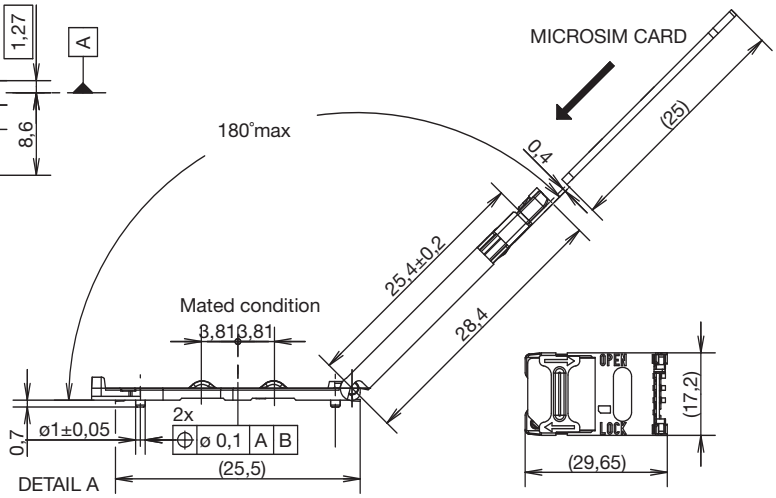

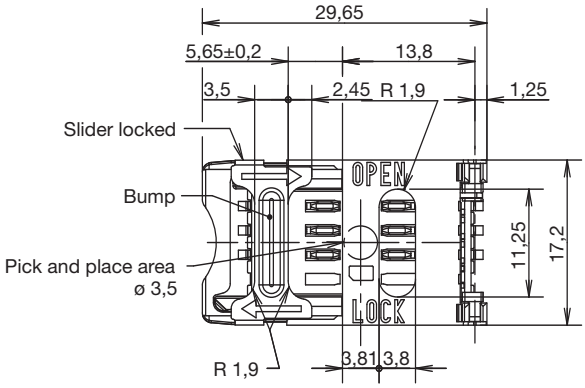

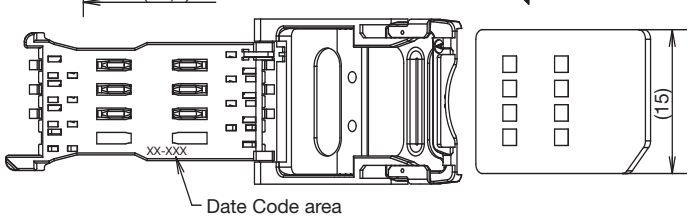

RECOMMENDED PC BOARD LAYOUT
(Component side)

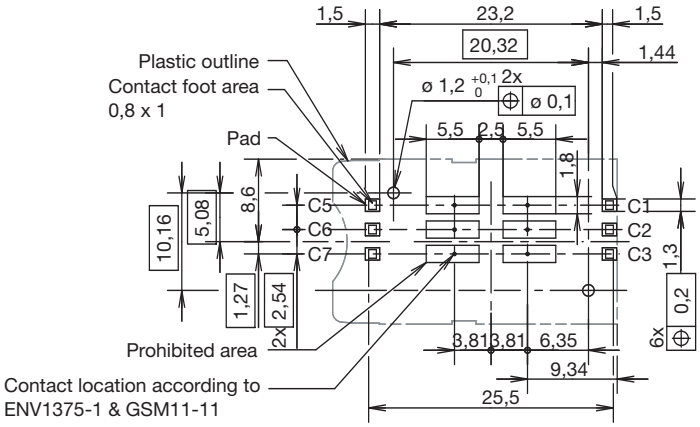

First Angle Projection

Dimensions are shown in mm
Specifications and dimensions subject to change

CCM03-3003 LFT

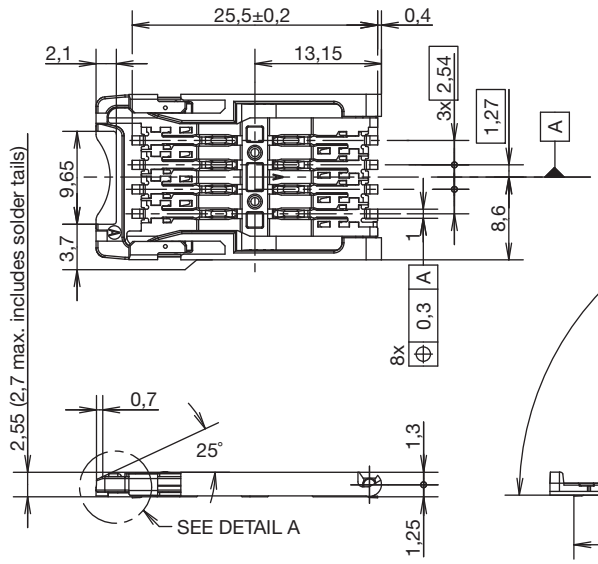

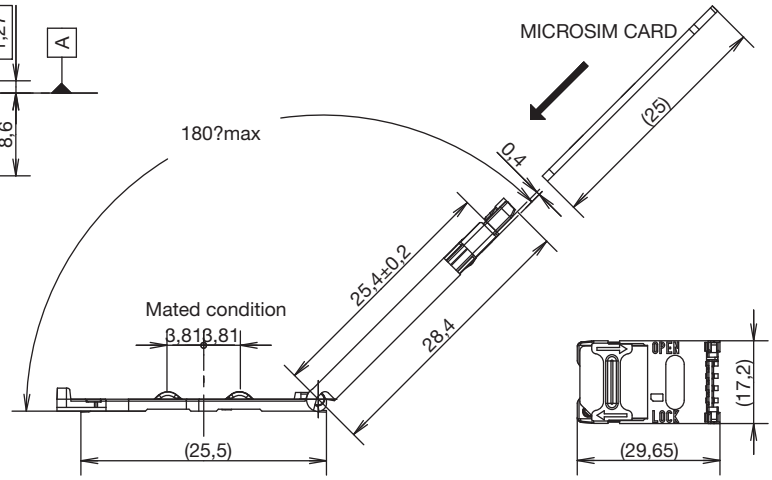

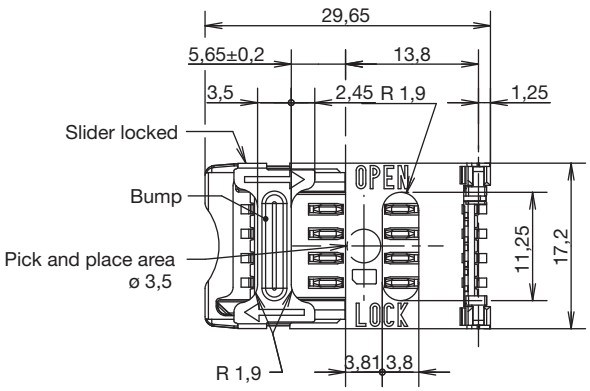

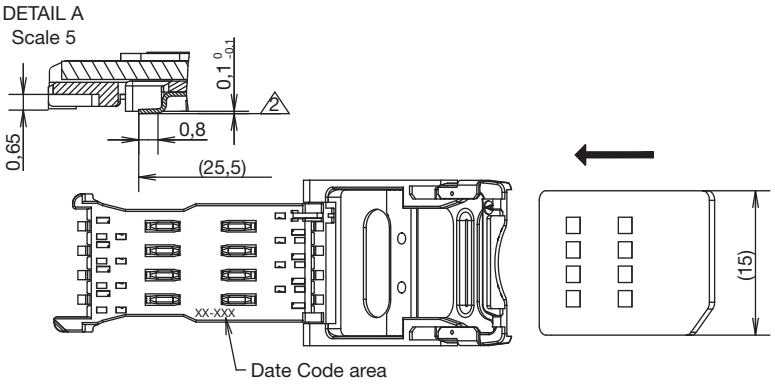

RECOMMENDED PC BOARD LAYOUT
(Component side)

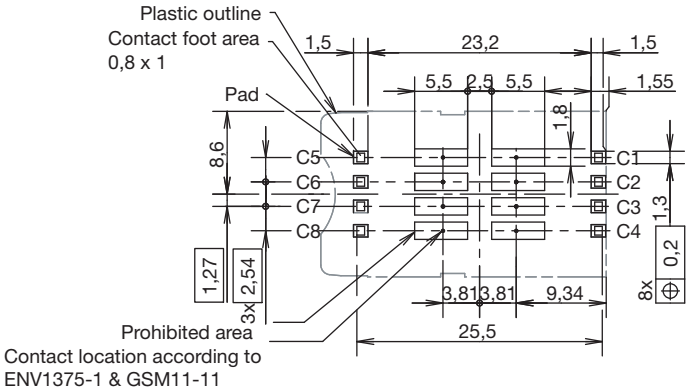

SIM/SAM

First Angle Projection

Dimensions are shown in mm
Specifications and dimensions subject to change

CCM03-3004 LFT

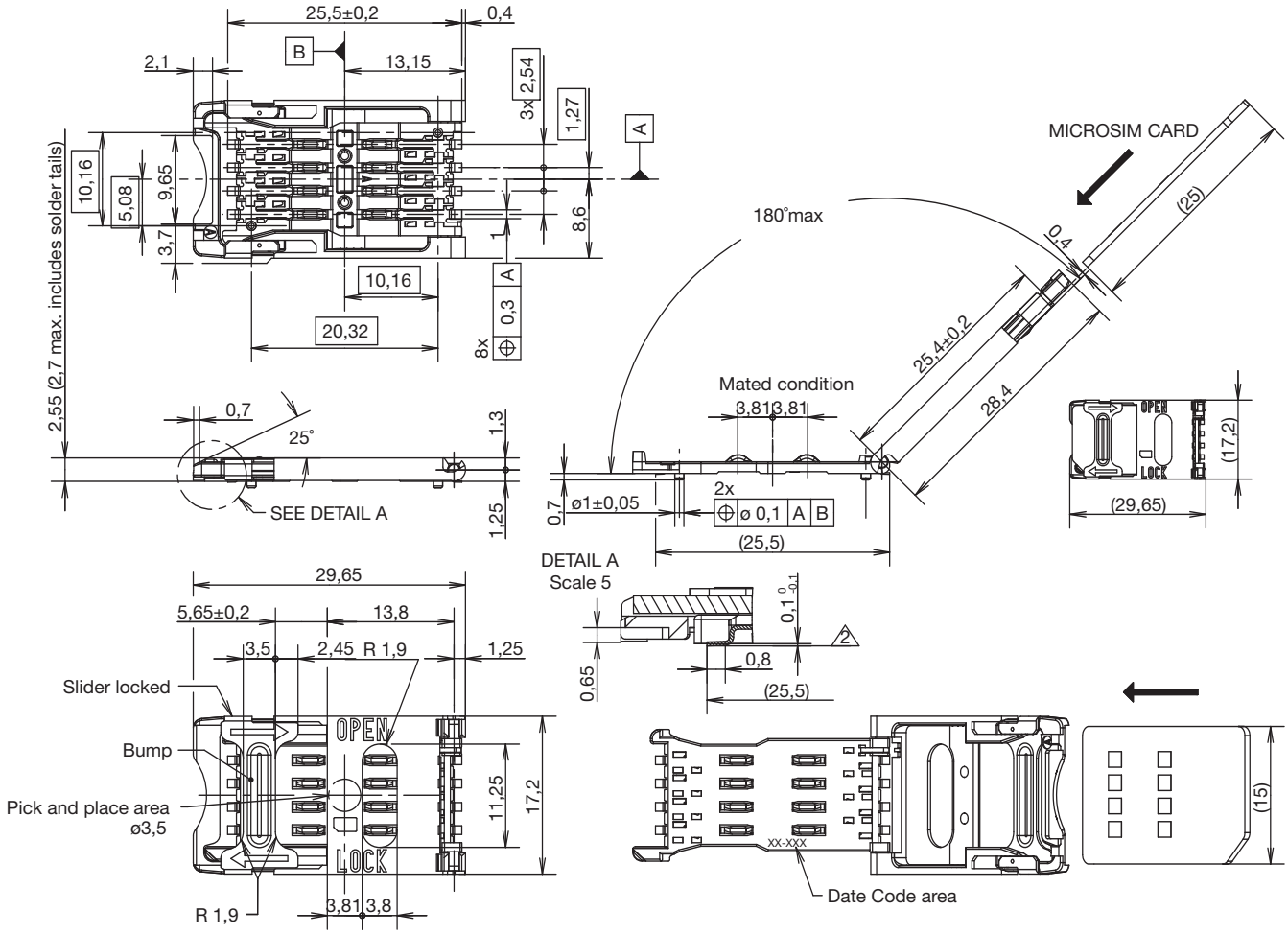

RECOMMENDED PC BOARD LAYOUT
(Component side)

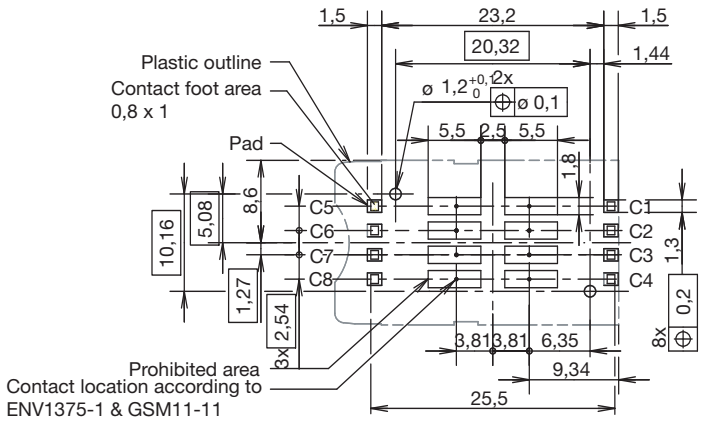

First Angle Projection

Dimensions are shown in mm
Specifications and dimensions subject to change

CCM03-3011 LFT

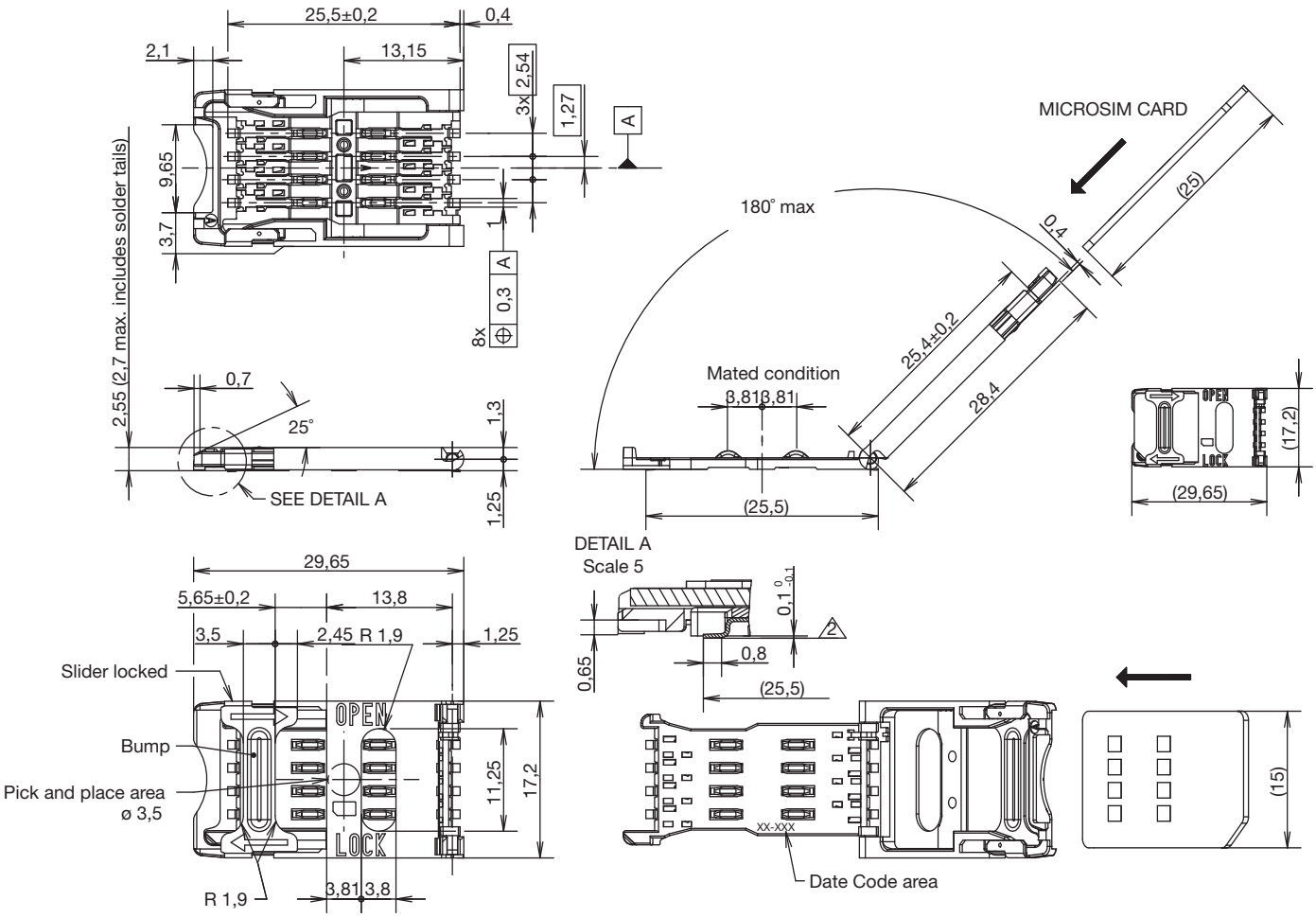

RECOMMENDED PC BOARD LAYOUT
(Component side)

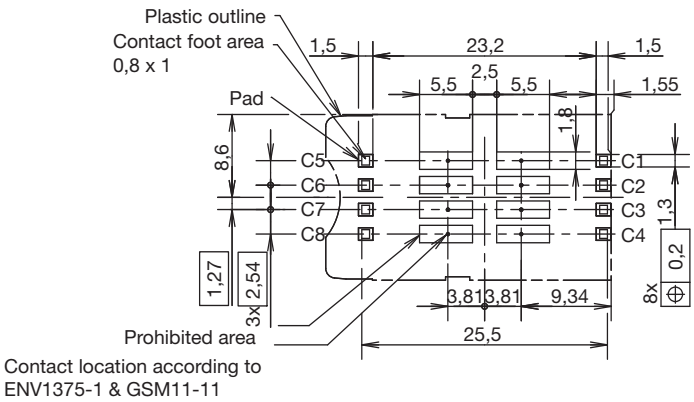

SIM/SAM

First Angle Projection

Dimensions are shown in mm
Specifications and dimensions subject to change

CCM03-3012 LFT

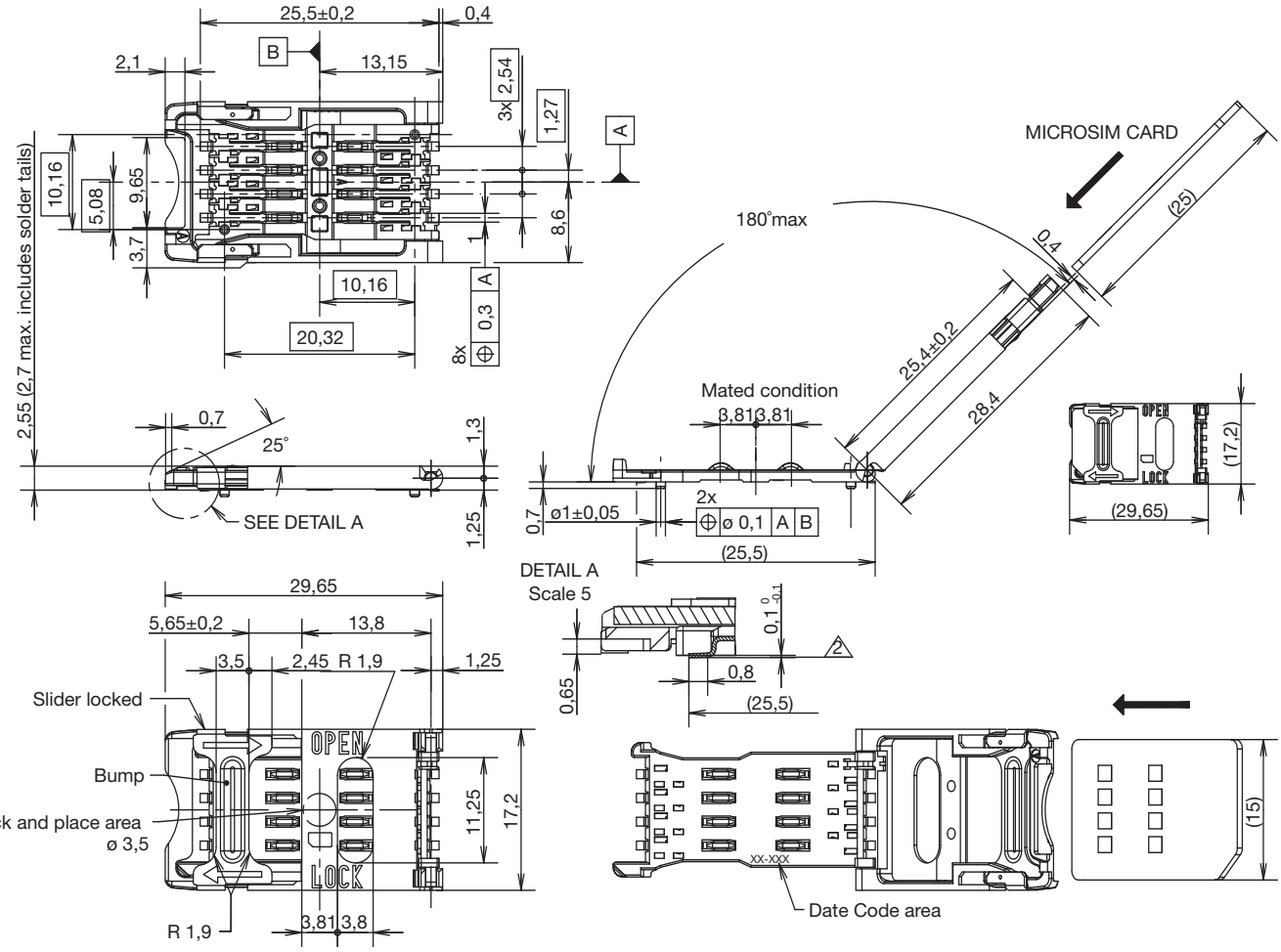

RECOMMENDED PC BOARD LAYOUT
(Component side)

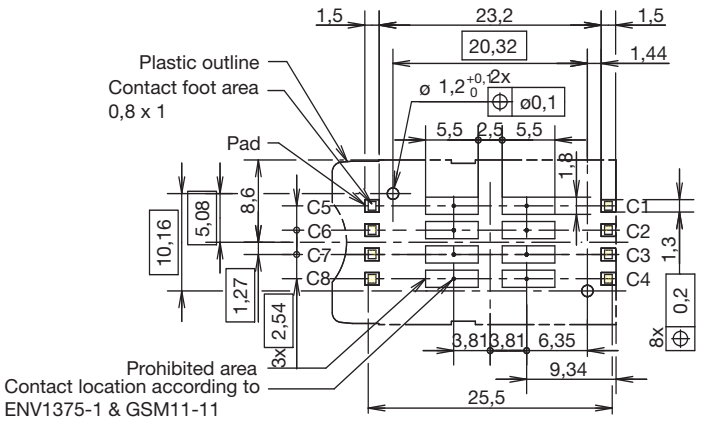

First Angle Projection

Dimensions are shown in mm
Specifications and dimensions subject to change

CCM03-3013 LFT

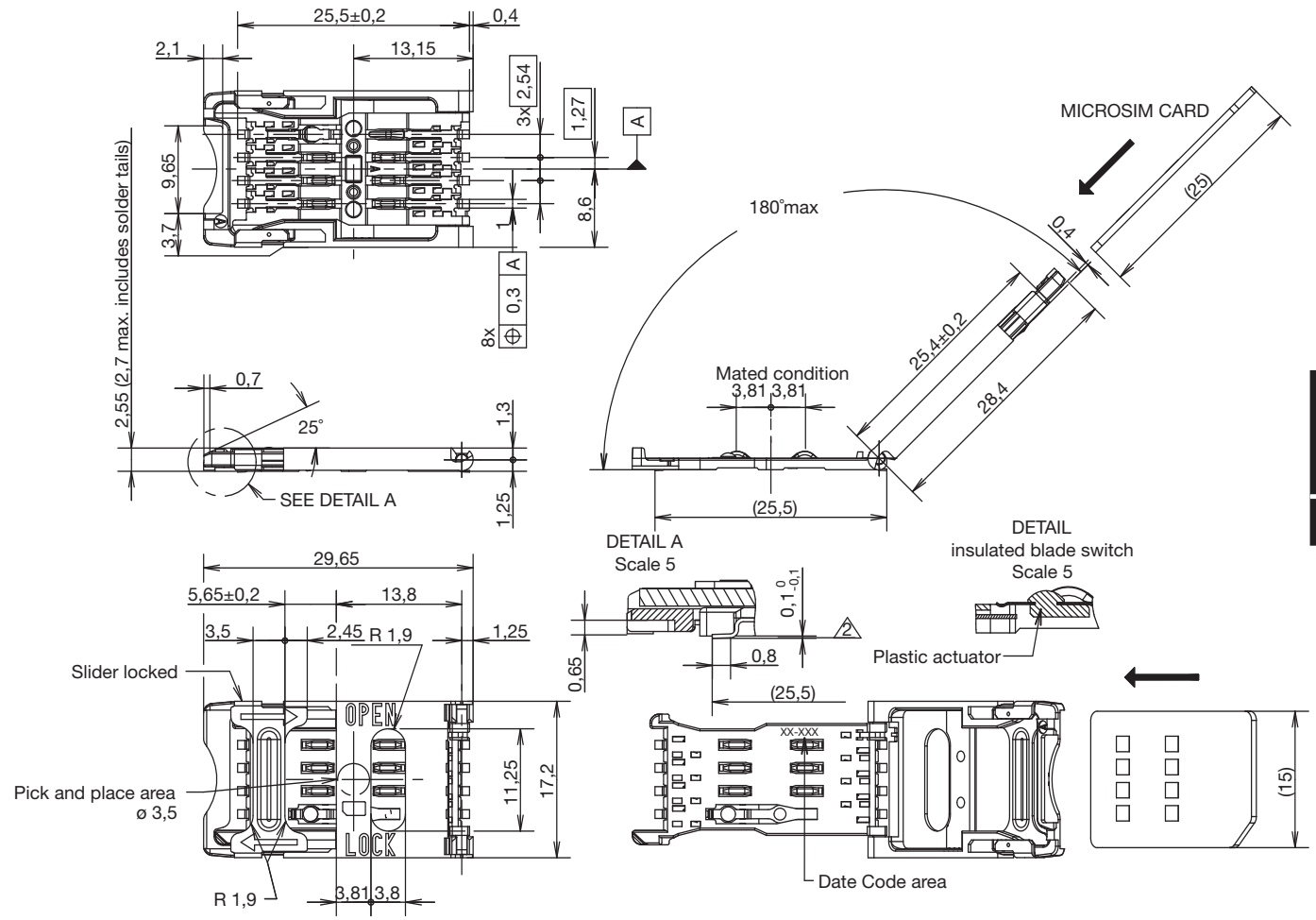

RECOMMENDED PC BOARD LAYOUT
(Component side)

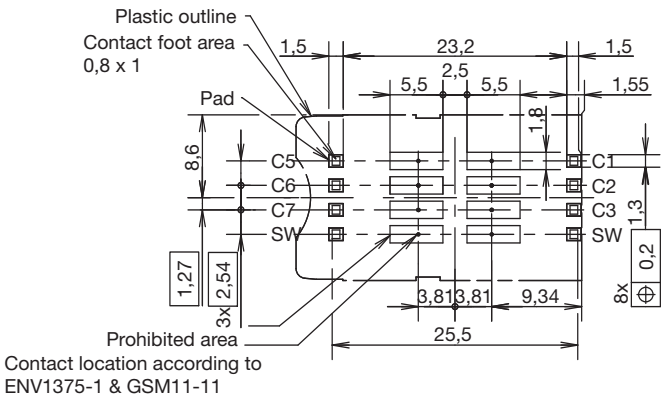

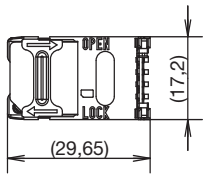

SIM/SAM

First Angle Projection

Dimensions are shown in mm
Specifications and dimensions subject to change

CCM03 MK2 Series

CCM03-3512 LFT

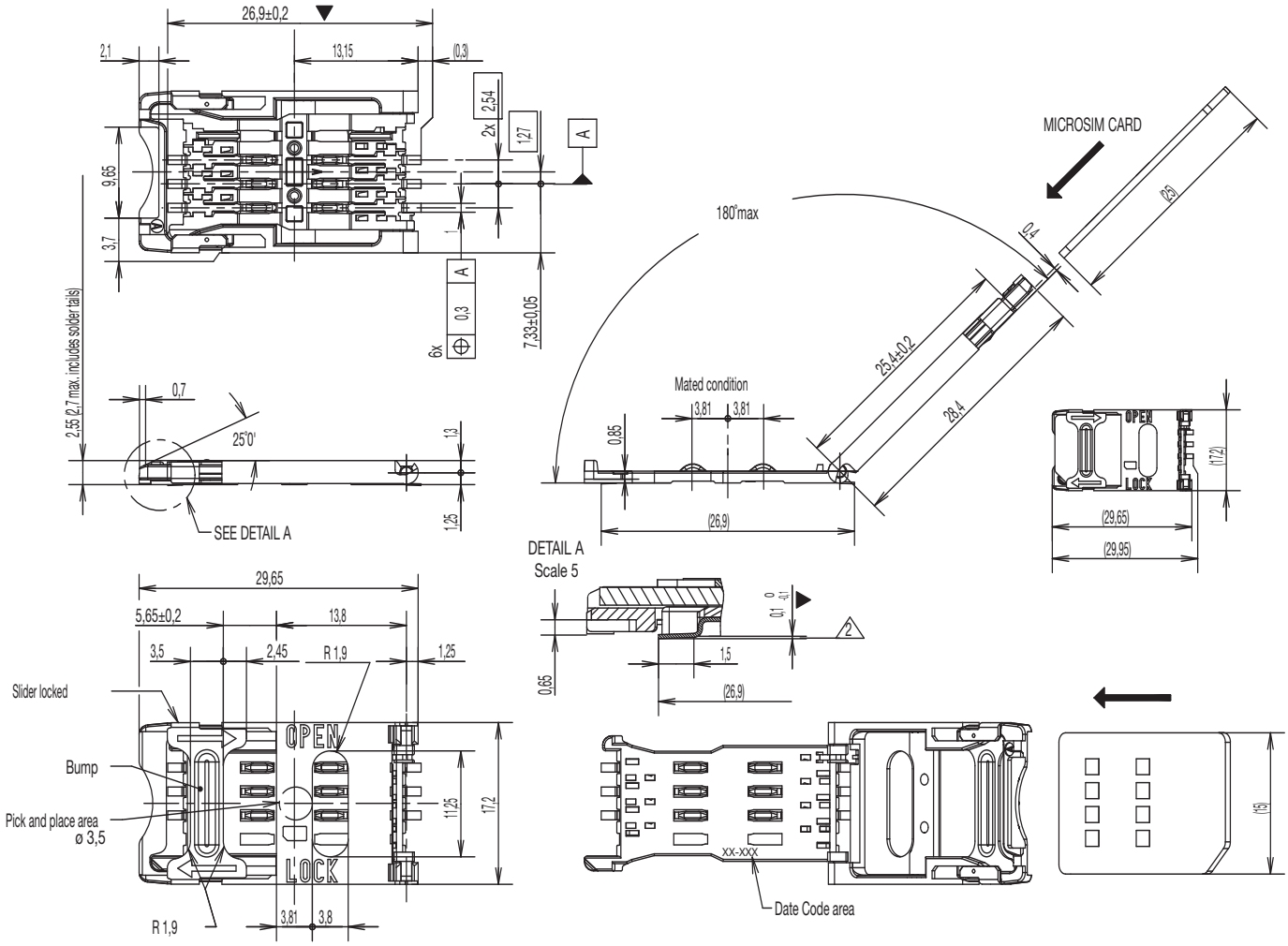

RECOMMENDED PC BOARD LAYOUT
(Component side)

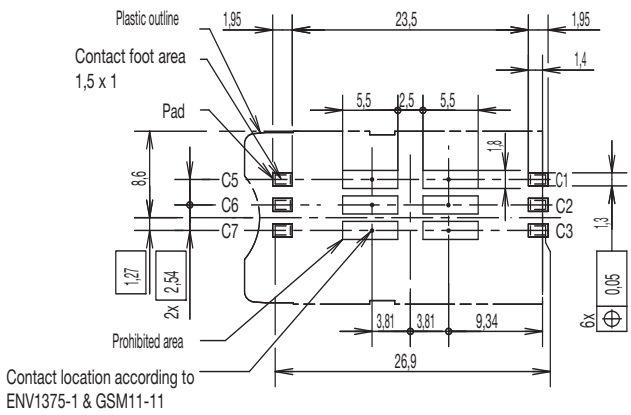

First Angle Projection

Dimensions are shown in mm
Specifications and dimensions subject to change

CCM03-3504 LFT / CCM03-3505 LFT

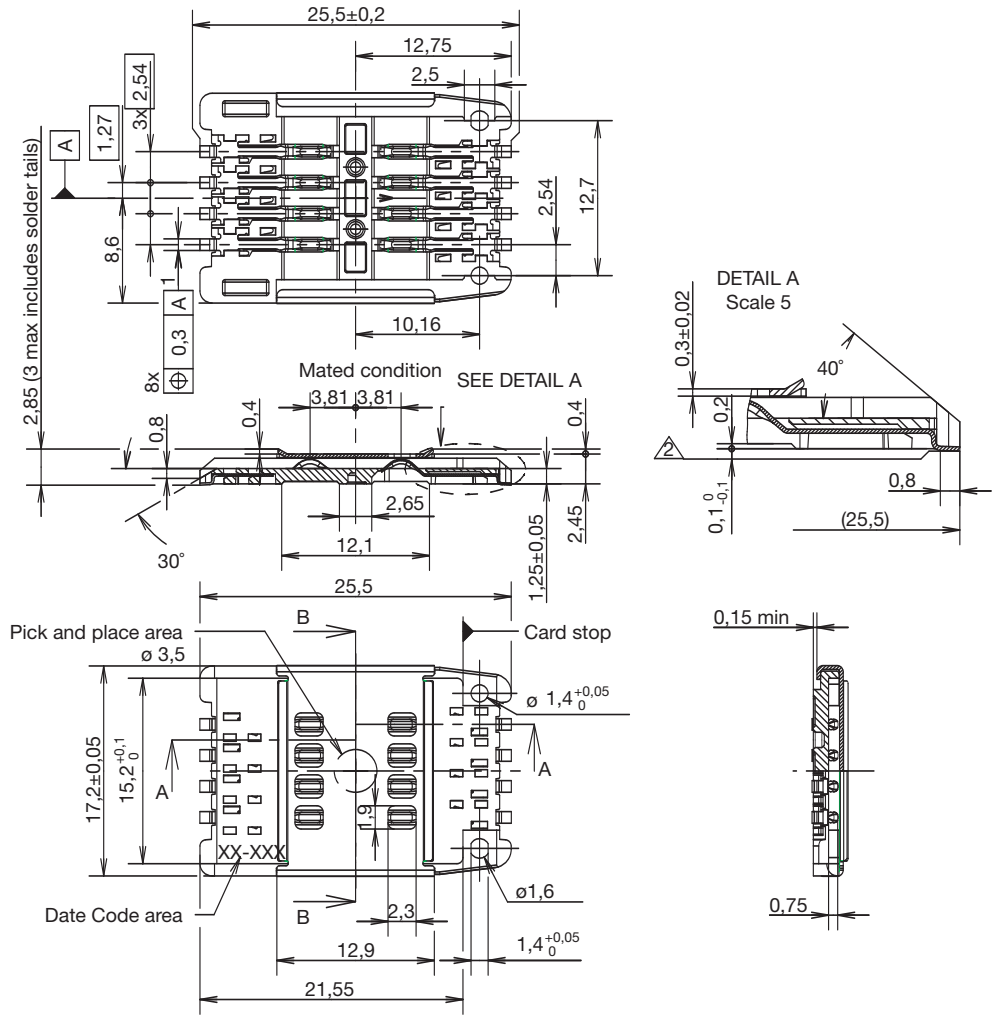

RECOMMENDED PC BOARD LAYOUT
(Component side)

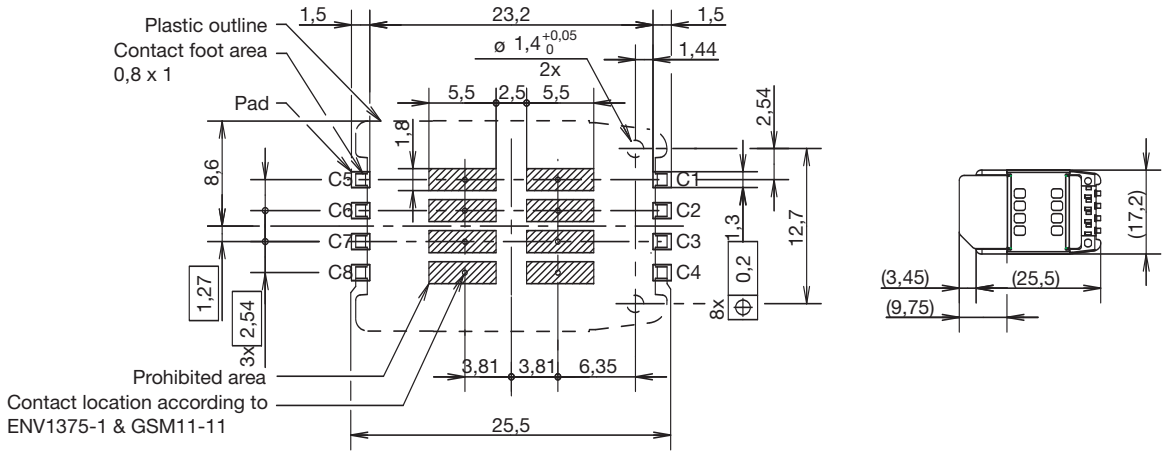

First Angle Projection

Dimensions are shown in mm
Specifications and dimensions subject to change

SIM/SAM

CCM03 MK2 Series

CCM03-3754 LFT

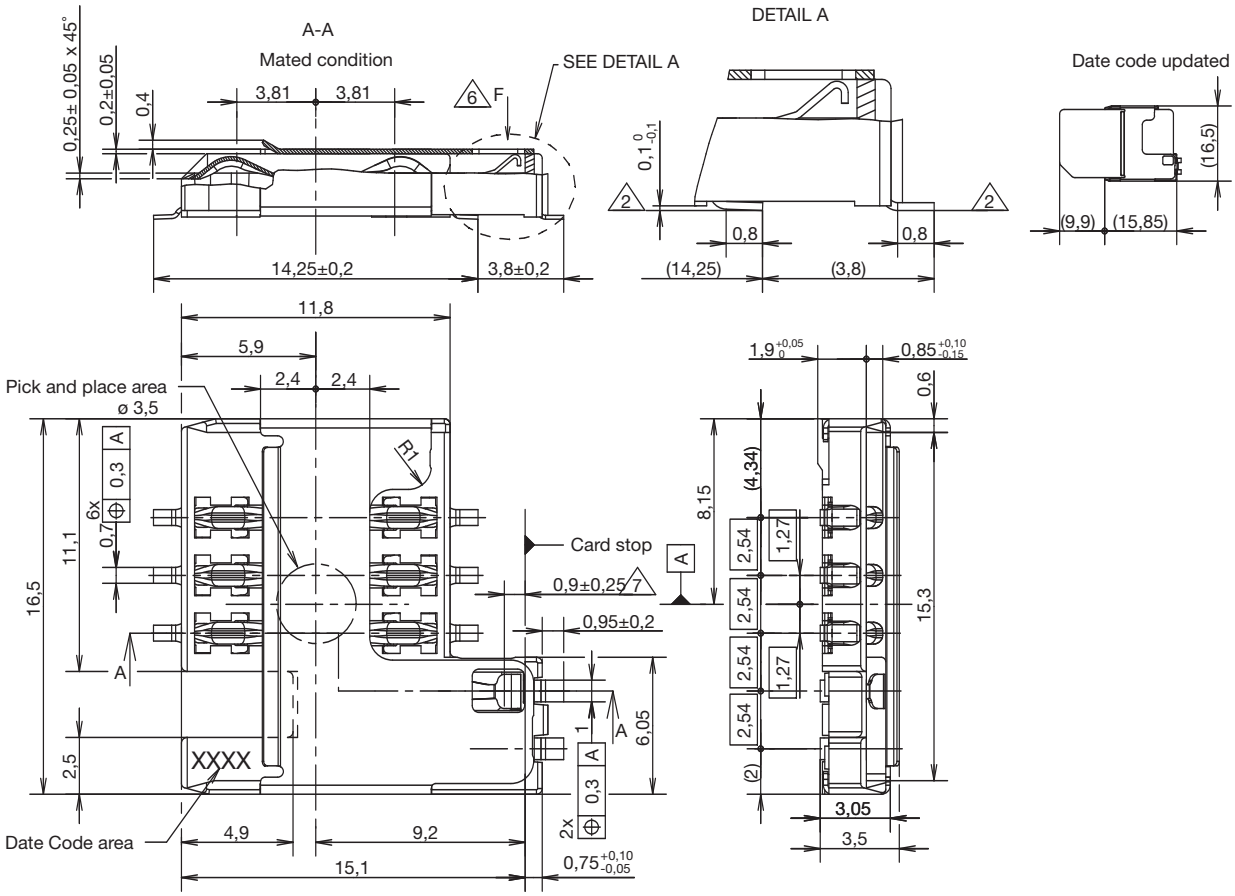

RECOMMENDED PC BOARD LAYOUT
(Component side)

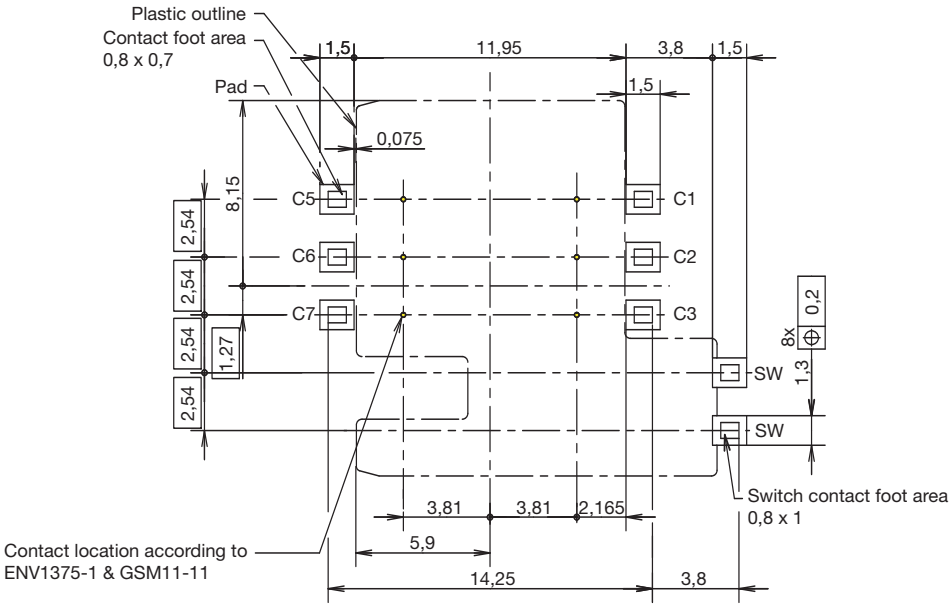

First Angle Projection

Dimensions are shown in mm
Specifications and dimensions subject to change

CCM03-3760 LFT

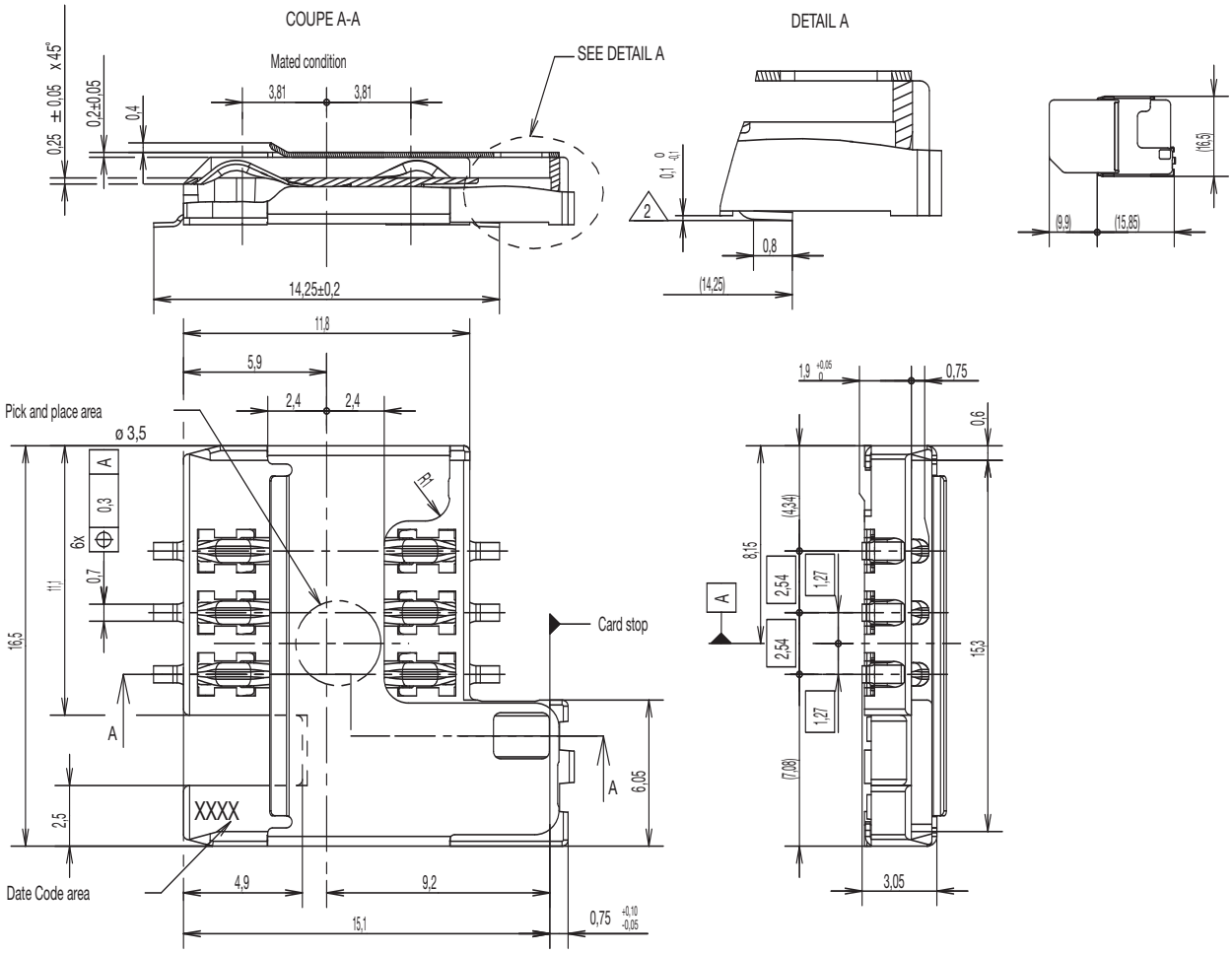

RECOMMENDED PC BOARD LAYOUT
(Component side)

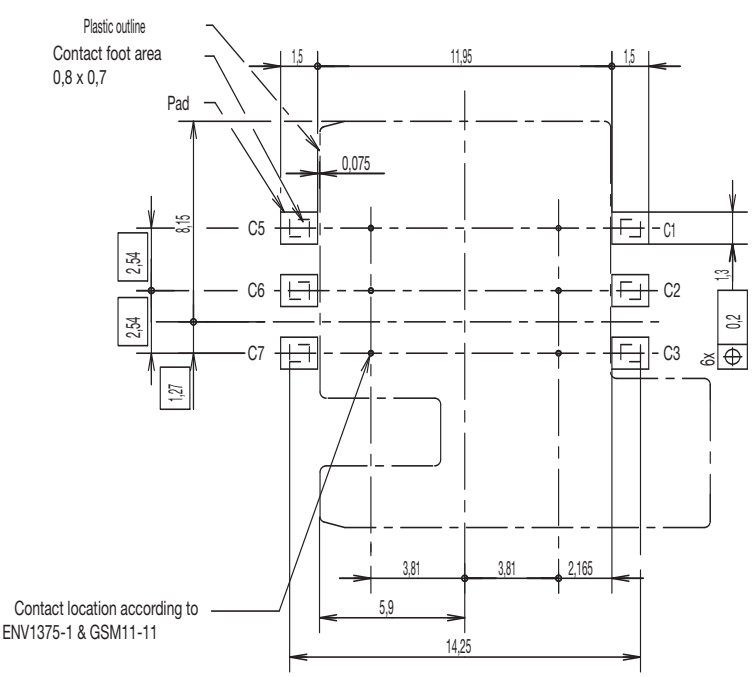

First Angle Projection

Dimensions are shown in mm
Specifications and dimensions subject to change

SIM/SAM

CCM03 MK2 Series

CCM03-3764 LFT

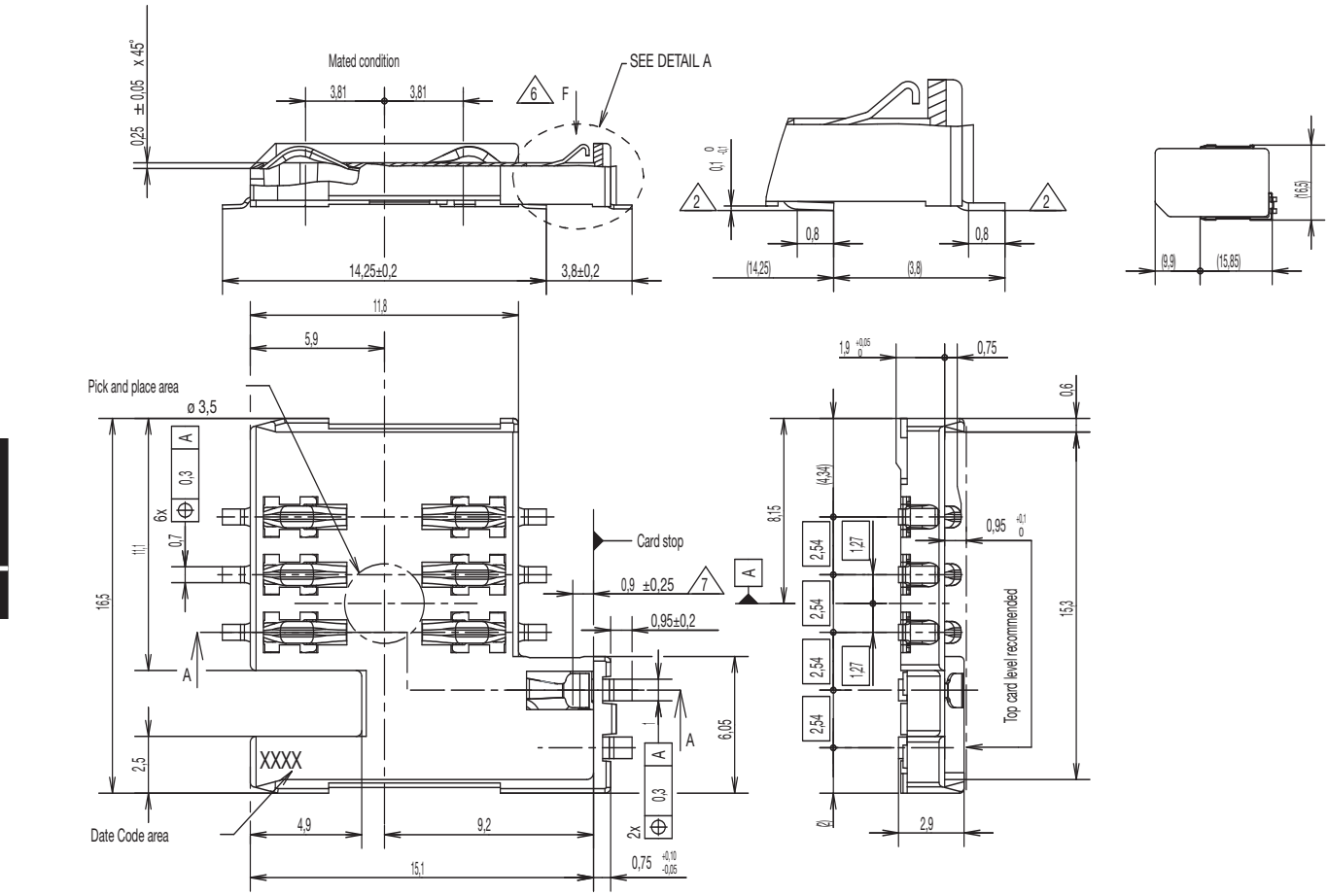

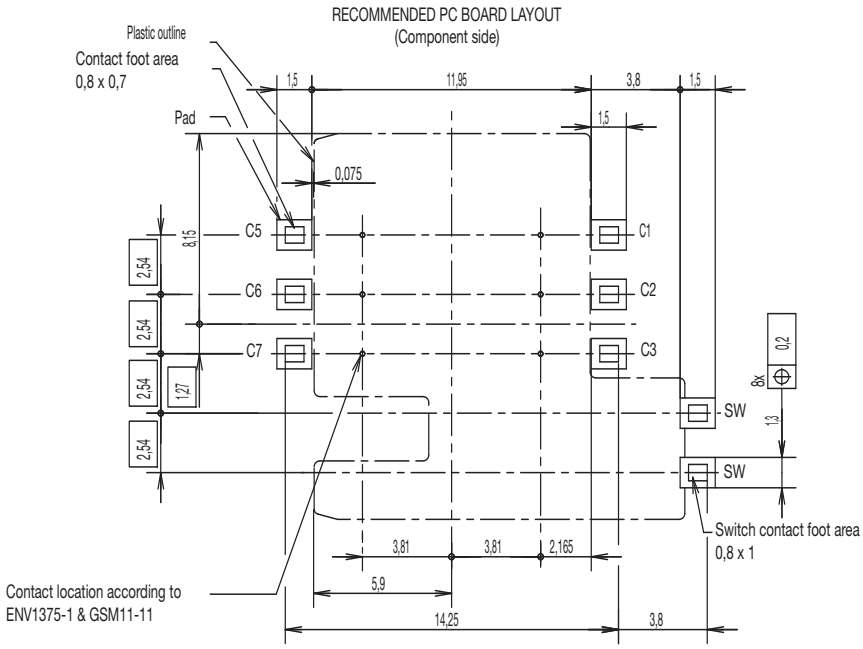

First Angle Projection

Dimensions are shown in mm

Specifications and dimensions subject to change

CCM04 MK3 Series

Features

- ***SIM and SAM card acceptance***
- ***Compatible with pick and place and lead free soldering***

Typical Applications

- ***Mobile***
- ***POS***
- ***Identification***
- ***GPS***

Mechanical

Number of contacts	6 or 8
Mechanical life	30,000 cycles
Card insertion force	10N max
Card extraction force	1N min / 10N max
Contact force	0,35N min to 0,65N
Vibration Frequency	10 to 500 Hz. Acceleration 50m/s^2 Duration 6 hours - amplitude 0,35mm
Shock	Peak value 500 m/s^2 – Duration 11 ms 3 shocks in each direction of each axis
Max elect. discontinuity	1µs

Contact Electrical Data

Insulation resistance	1000 MΩ min
Contact resistance max	100 mΩ max
Switching current	10 µA min / 1 A max
Dielectric strength	750 Vrms min

Environmental Data

Operating temperature	-40°C to +85°C
Salt mist	IEC 512 test number 11f (96 hours)
Damp heat	IEC 512 test number 11c (10 days)
RoHS compliant	

Packaging

See table below

Soldering Process

Compatible with lead free SMT soldering process

Designation	# of Contacts	Contact Plating	PCB Version	Height (mm)	Dim. (mm)	Packaging
CCM04-5137LFS	6	gold	SMT IN	1,9	8,15 X 10,45	reels of 1,900 pcs

CCM04-5137 LFS

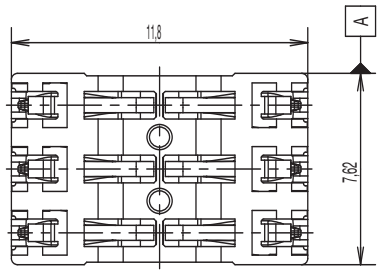

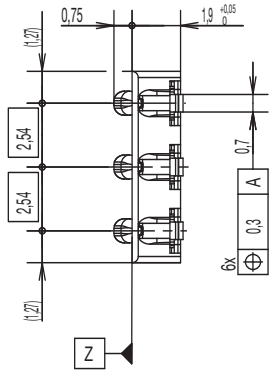

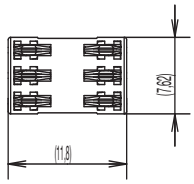

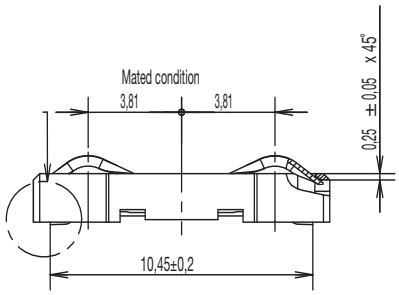

DETAIL A
Scale 10

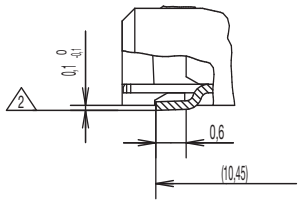

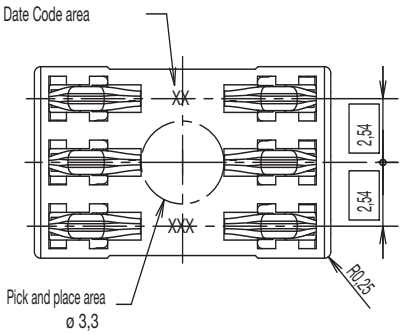

RECOMMENDED PC BOARD LAYOUT
(Component side)

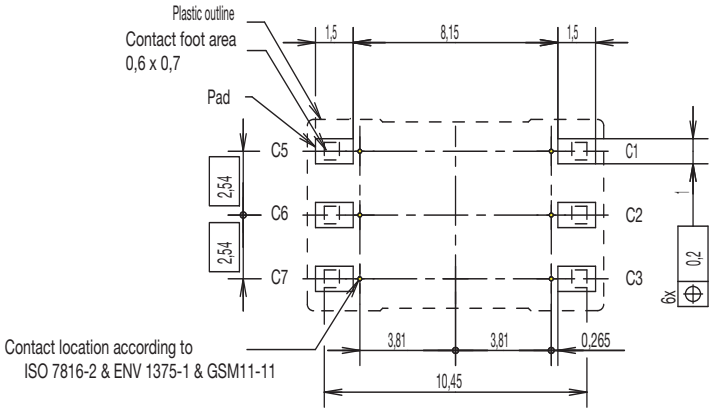

SIM/SAM

First Angle Projection

Dimensions are shown in mm
Specifications and dimensions subject to change