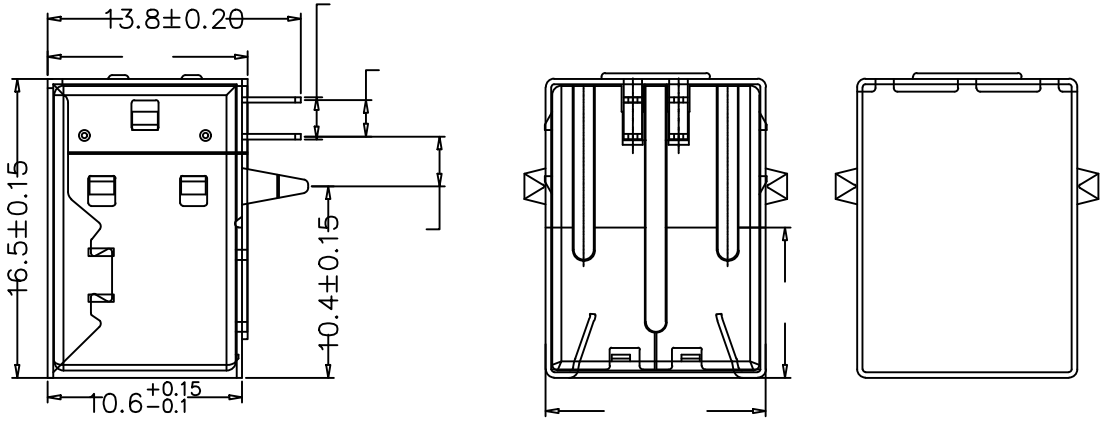

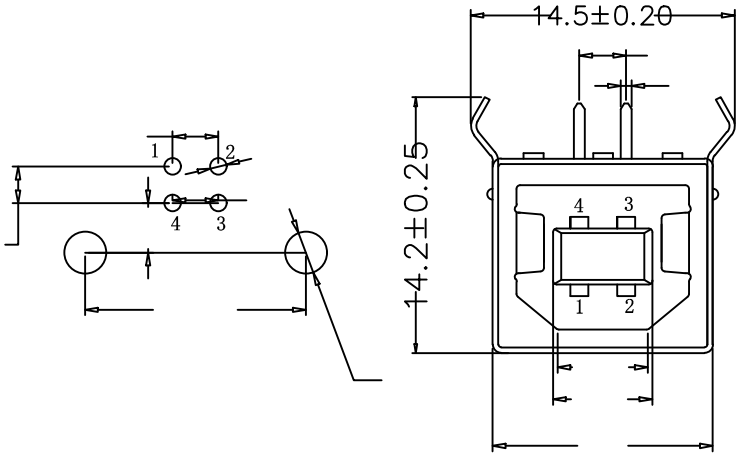

规格说明:Specifications:

电气特性:Electrical:

1.额定电流: Current Rating
1.5A/contact terminal

2.额定电压: Voltage Rating
30V DC

3.接触阻抗:Contact Resistance
30 milliohms MAX

4.耐电压:Dielectnic Withstanding Voitage:
500 V AC AT Sea Levol

5.绝缘阻抗:Lnsulation Resistance:
1000MEGA ohms MIN

物理性能:Mechanical:

1.插拔力: Cnnector Mate and Unmate Force
Mate force:3.57kgf(MAX)
Unmate force:1.02kgf(MIN)

2.端子保持力: Terminal Retenion
1.0kgf(MIN)

原材料:Matorial:

1.塑胶:Housing:
PBT/LCP

2.端子:Contact:Copper Alloy C2680

3.外壳:Shell: Copper Alloy SPCC/C2680

电镀:Finish:

1.端子:Contact: Piated Gold in Mating Area
Tin On Solder Talls

端子四周镀50U"(MIN)锡, 半金锡1U"

2.外壳:Shell:
外四周镀80U"(MIN) 镍
Nickel Plating

04XN-1XR851 -X

1:AU 1U"
6:AU 30U"

T:TIN
N:NICKEL

B:Black W:White BL:Blue

1:SPCC 5:BRASS

———		new		2015/5/3		A	瀚源
ECN BO.		DESCRIPTION.		DATE.		REV.	
DESIGNED	CHECKED	APPROVAL	DRAWING NUMBER			SCALT: 1/2	SCALE: 3:1
Mikey	Tom	Jerry	PART NAME	04XN-1XR851-X	UNLESS OTHERWISE SPECIFIED,TOLERANCE:		X. ±0.25 X.x ±0.20 X.xx ±0.15 ANGULAIR ±3
			MODEL NAME	04XN-1XR851-X			
			3RD ANGLE PROJ	HanElectricity Co.,LTD			FILE.NO.