C&K Switches Catalog

Pushbutton

Tactile

Navigation

Keyswitch

Detect

Toggle

Rocker

Dip

Slides

Snap

Rotary

Rotary (Encoder)

Switchlock

Thumbwheel

Smartcard Connector

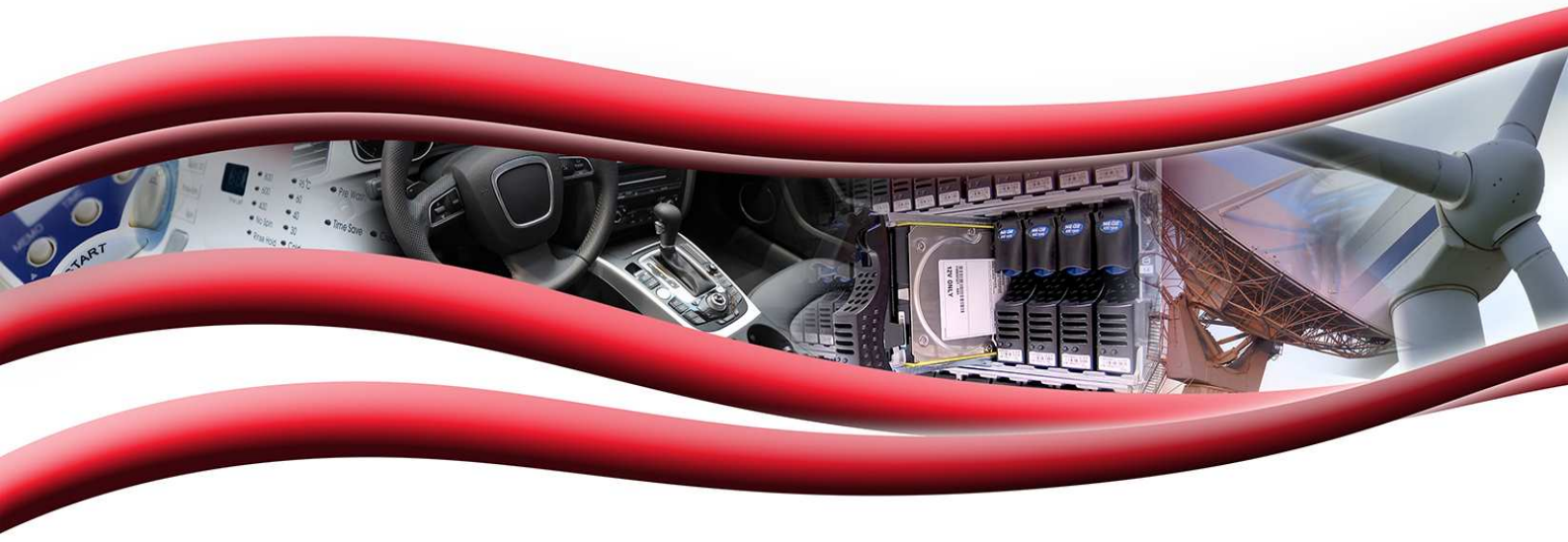

Pushbutton
Product Selection Guide

Pushbutton									
Series	**ELUM**	**EP**	**TP**	**E020**	**8020**	**E010**	**8060**	**8500**	**KM**
Switch Type	Mom./ Latching	Tiny	Tiny	Snap-acting Mom.	Snap-acting Mom.	Miniature	Alternate Action	Sub-miniature	Sub-miniature
Poles/Throws	SPDT	SPST, SPDT, DPST	SPST, SPDT, DPST	SPDT, DPDT	SPDT, DPDT, 3PDT, 4PDT	SPDT	SPDT, DPDT	SPST	SPST, SPDT
Max. Current	3.5 VA	1 Amp	1 Amp	1 Amp	1 Amp	4 Amps	6 Amps	3 Amps	1 Amp
Process Sealed		•		•		•			
Illuminated	•				•		•	•	
PCB Mount Options									
Thru-hole	•	•	•	•	•	•	•	•	•
Vertical		•	•	•	•	•	•	•	•
Right Angle	•	•	•	•	•	•	•	•	•
Surface Mount	•	•							
Panel Mount			•		•	•	•	•	•
Page No.	A-4	A-9	A-15	A-21	A-29	A-46	A-52	A-62	A-67

Pushbutton							
Series	**8600**	**8700**	**GP**	**PN**	**PHB**	**F**	**NE-18**
Switch Type	Micro-miniature	Over Travel	Ultra-miniature	Alternate & Mom. Action	Short Stroke	Alternate & Mom. Action	Mains / Power
Poles/Throws	SPST	SPST	SPST, SPDT	SPDT, DPDT, 4PDT	DPDT, 4PDT	DPDT, 4PDT, 6PDT, 8PDT, 10PDT	DPST, DPDT Varied
Max. Current	500 mA	1 Amp	0.4 VA	200 mA	100 mA	500 mA	6 A
Process Sealed			•				
PCB Mount Options							
Thru-hole	•	•	•	•	•	•	•
Vertical	•	•	•				
Right Angle			•	•	•	•	•
Surface Mount			•				
Panel Mount	•	•				•	•
Page No.	A-71	A-74	A-77	A-81	A-84	A-87	A-96

Pushbutton
Product Selection Guide

Pushbutton								
Series	**FP**	**AP**	**APB**	**HP**	**NP**	**PBA**	**PB**	**PS**
Switch Type	Ultra Miniature	Industrial	Industrial	Hall Effect	Sealed Power	Snap-acting Mom.	Miniature	Sub-miniature Microminiature
Poles/Throws	SPST	SPST	SPST	Linear Output	SPDT	DPST	DPDT 4PDT	SPDT DPDT
Max. Current	0.4 VA	400mA	400mA	10 mA	5 Amp	250mA	0.3A / 1A	0.1 / 1A 0.3 / 2A
Process Sealed	•	IP67	IP67	IP68	IP68			
PCB Mount Options								
Thru-hole	•	•	•		•	•	•	•
Vertical	•	•	•	•	•			•
Right Angle	•					•	•	•
Panel Mount		•	•	•	•			•
Wire Leads		•	•	•	•			
Solder Lug		•	•					
Surface Mount								
Quick Connect								
Page No.	A-105	A-108	A-114	A-118	A-120	A-127	A-131	A-139

ELUM™ Series
Right Angle Illuminated Latching Pushbutton

LEAD FREE COMPATIBLE OPTION

Features/Benefits

- *SPDT (N.O. & N.C.)*
- *Low height above PCB*
- *Reliable self-cleaning contact*
- *Surface-mount or thru-hole PCB*
- *Standard or custom actuator*
- *Central LED illumination*
- *Latching or Momentary*
- *Long travel. Smooth feel*
- *RoHS compliant and compatible*

Typical Applications

- *Telecom network equipment*
- *Automotive electronics*
- *Consumer electronics*
- *Computer, server, modem, data storage*
- *Professional instrumentation, medical*

Patent Numbers
6,974,924 B2 US
EP1583118B1 Europe

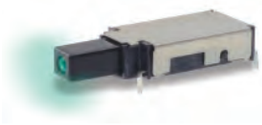

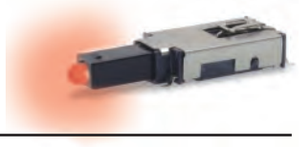

Materials

FIXED CONTACTS: Stainless steel, silver plated with gold flash
TERMINALS: Stainless steel, silver plated
MOVABLE CONTACTS: Copper alloy, silver plated with gold flash
BASE: Glass filled LCP (UL94V-0)
ACTUATOR: Glass filled nylon 4/6 (UL94V-0)
COVER: Stainless steel

Electrical

MAXIMUM POWER: 3.5 VA
MIN./MAX. VOLTAGE: 20 mV – 50 VDC
MIN./MAX. CURRENT: 0.01 mA – 250 mA
DIELECTRIC STRENGTH: ≥ 250 Vrms
CONTACT RESISTANCE: ≤ 50 mΩ
INSULATION RESISTANCE: ≥ 10^9 Ω
BOUNCE TIME: ≤1 ms
LED SPECIFICATIONS: See page A-5

Mechanical

OPERATING FORCE: 2.5 N at Full Travel
SWITCHING TRAVEL: .067" (1.7 mm)
LATCH TRAVEL: .131" (3.6 mm)
FULL TRAVEL: .200" (5.1 mm)

Operating Environment

OPERATING TEMPERATURE: -40˚C TO 80˚C.
STORAGE TEMPERATURE: -40˚C TO 80˚C.
RELATIVE HUMIDITY: 90% R.H. @ 80˚C.
OPERATING LIFE: 30,000 Cycles.
VIBRATION: Per EIA 186-E Method
MECHANICAL SHOCK: Per EIA 186-E Method 12.
OVERLOAD: Withstands 40 N for 1 minute without damage

Process Environment

SOLDERABILITY: According to Mil STD 202F Method 208D or EIA RS-186E Method 9.
LEAD FREE PROCESS COMPATIBLE: 260˚C peak, 10 seconds Max. above 250° C.
WASHING PROCESS: No clean process compatible (SMT)
Bottom wash compatible (Thru-hole)
SHEAR TEST (SWITCH/PCB): > 40 N

Packaging

"SA" Terminal Style SMT: Tape and reel per EIA 481-2 (450/reel)
"TH" Terminal Style PC: Tray (60/tray)

NOTE: Any models supplied with Q, contact material are RoHS compliant.

NOTE: Specifications and materials listed above are for switches with standard options. For information on specific and custom switches, please contact Customer Service.

Build-A-Switch

To order, simply select desired option from each category and place in the appropriate box.

E L U M — □ □ — □ □ — Q — □ — □ □ □

Designation
ELUM ELUM Series

Switch Function
OA Momentary
OC*** Momentary short travel
EE Latching (push-push)

Terminal Style
TH Right Angle, PC thru-hole
SA Right Angle, surface mount

Contact Material*
Q Silver with gold flash

Illumination
(NONE) Models without illumination
1 LED White
2 LED Bi-color – Red (Green)
3 LED Red
5 LED Amber
6 LED Green
7 LED Blue
8 LED Bi-Color – Amber (Green)

Actuator Style**
C02 Black without window
C12 Black with window
C22 Black with window and snap feature for custom actuators

* Other plating options available, please contact Customer Service.
** Custom actuators available, please contact Customer Service.
*** Short travel available in momentary only.

Third Angle Projection

Dimensions are shown: Inches (mm)
Specifications and dimensions subject to change

ELUM™ Series
Right Angle Illuminated Latching Pushbutton

STANDARD OPTIONS

ELUMEESAQ7C12

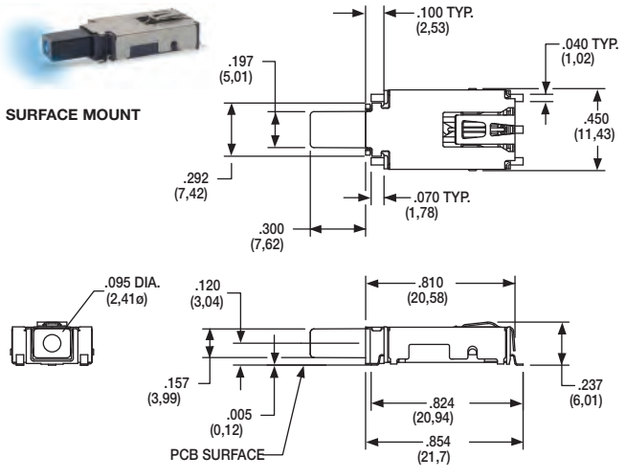

ACTUATOR SHOWN EXTENDED POSITION

ELUMOATHQ6C12

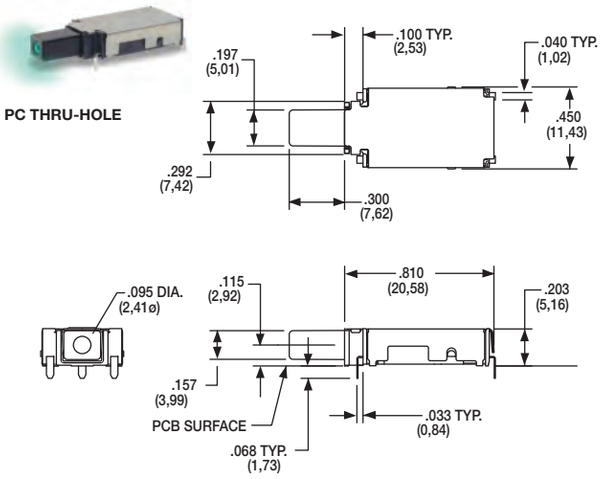

ACTUATOR SHOWN EXTENDED POSITION

ELUMEESAQ3C22

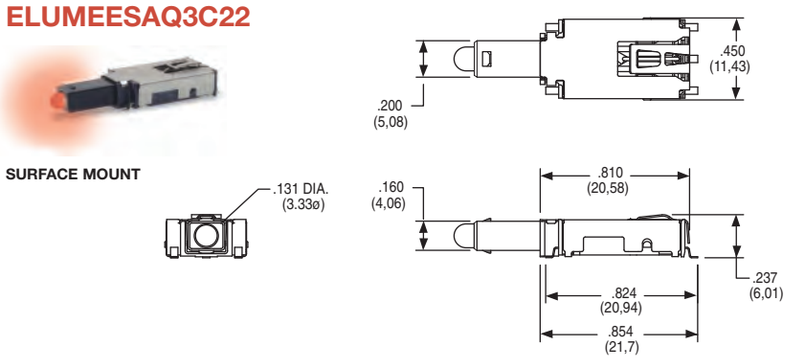

ACTUATOR SHOWN EXTENDED POSITION

DESIGNATION

E L U M

ELUM ELUM SERIES, Illuminated Latching Pushbutton

SWITCH FUNCTION

OPTION CODE	NO. OF POLES	POSITION 1 SWITCH FUNCTION	POSITION 1 CONNECTED TERMINALS	POSITION 2 SWITCH FUNCTION	POSITION 2 CONNECTED TERMINALS	SCHEMATIC
OA / OC	SP Momentary	ON	3 – 4	ON (Mom.)	3 – 2	SPDT: 3 C, 4 NC, NO 2; 5, 1; + Anode – Cathode
EE	SP Latching (Push-Push)	ON	3 – 4	ON	3 – 2	

For SPST N.O. function, only terminals 3 & 2 are used.
For SPST N.C. function, only terminals 3 & 4 are used.
Circuit: Make before break

LED pins 1 & 5 are independent of switch function.

NOTE:
For bi-color LED's the polarity must be reversed to alternate the color

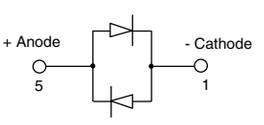

Third Angle Projection

Dimensions are shown: Inches (mm)
Specifications and dimensions subject to change

ELUM™ Series
Right Angle Illuminated Latching Pushbutton

TERMINAL STYLE

SA RIGHT ANGLE, SURFACE MOUNT

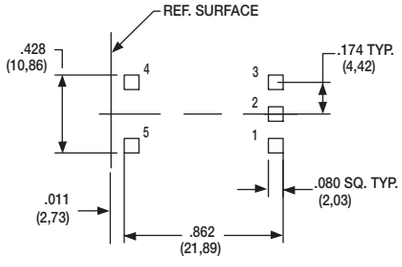

PCB MOUNTING

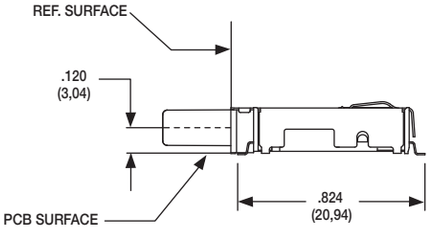

Terminal 5 = LED Anode

TH RIGHT ANGLE, PC THRU-HOLE

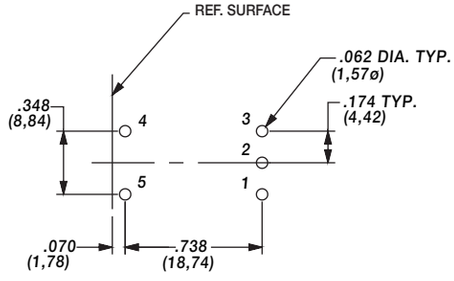

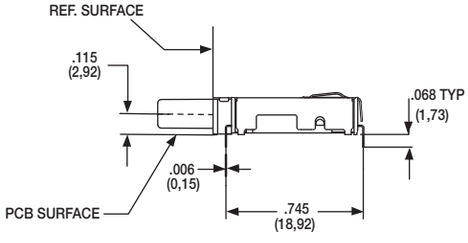

Terminal 5 = LED Anode

CONTACT MATERIAL

OPTION CODE	CONTACT MATERIAL	TERMINAL PLATING	RATINGS
Q	SILVER WITH GOLD FLASH	SILVER	250 mA

* Note: See Technical Data section of this catalog for RoHS compliant and compatible definitions and specifications.

FIXED CONTACTS AND TERMINALS: Stainless steel, silver plated with gold flash
MOVABLE CONTACTS: Copper alloy, silver plated with gold flash

NOTE: Any models supplied with Q, contact material are RoHS compliant.

ILLUMINATION

OPTION CODE	ILLUMINATION TYPE	TYPICAL INTENSITY* MIN	MAX	PEAK WAVELENGTH	Vf Forward Voltage
		(mcd)		(nm)	
0	Model without illumination	N/A		N/A	
1	LED Super White	4,000	5,000	N/A	3.5
2	LED Bi-Color – Red (Green)	10	20	635/565	2.0
3	LED Red	4	8	700	2.0
5	LED Amber	35	50	610	2.0
6	LED Green	35	50	565	2.0
7	LED Super Blue	800	1,500	470	3.8
8	LED Bi-Color – Amber (Green)	10	10	585/565	2.0

*LED FORWARD CURRENT: 20 mA
LED FORWARD VOLTAGE: see chart above
LED REVERSE VOLTAGE: 5.0 V MAX

* For information on specific and custom LED, please contact Customer Service.

Third Angle Projection

Dimensions are shown: Inches (mm)
Specifications and dimensions subject to change

ACTUATOR STYLE*

C02 BLACK WITHOUT WINDOW

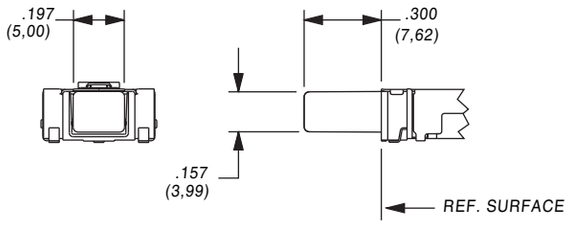

C12 BLACK WITH WINDOW

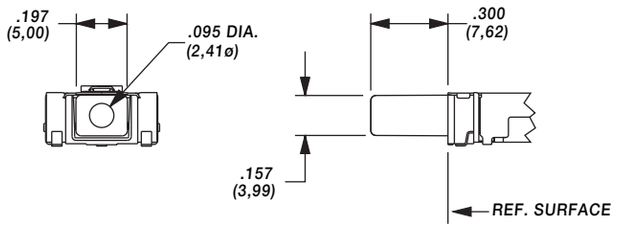

C22 BLACK WITH WINDOW AND SNAP FEATURE TO ACCEPT CUSTOM CAP

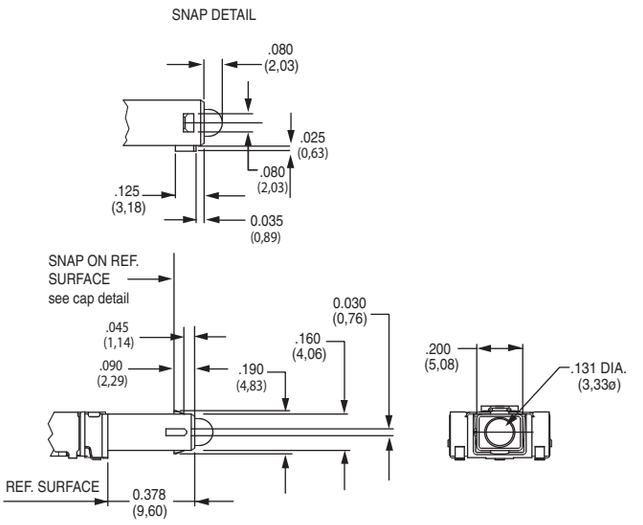

* Custom actuators available, please contact Customer Service.

FORCE TRAVEL DIAGRAM

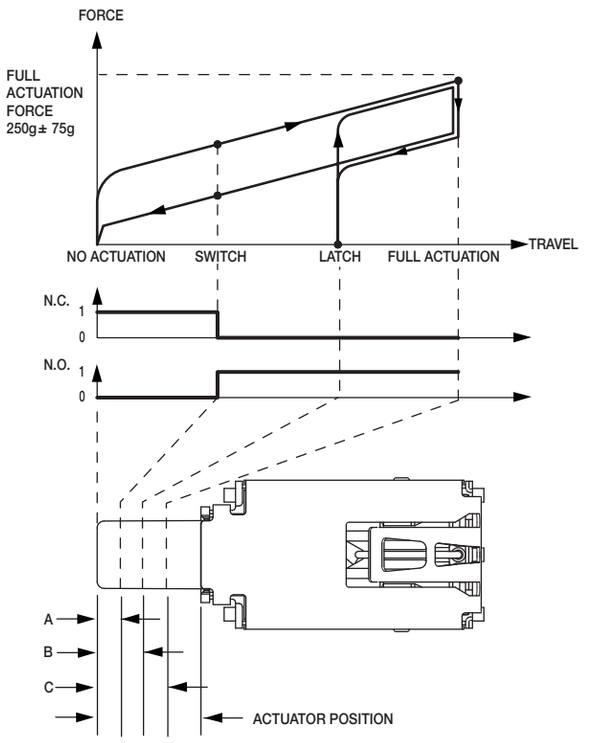

OA, EE ACTUATOR POSITION			
A	SWITCH POINT	.067 ±.020	1,7 ± 0.5mm
B	LATCH	.131 ±.020	3,3 ± 0.5mm
C	FULL ACTUATION	.200 ±.020	5,1 ± 0.5mm

OC ACTUATOR POSITION			
A	SWITCH POINT	.067 ±.020	1,7 ± 0.5mm
C	FULL ACTUATION	.098 ±.020	2,5 ± 0.5mm

TAPE & REEL

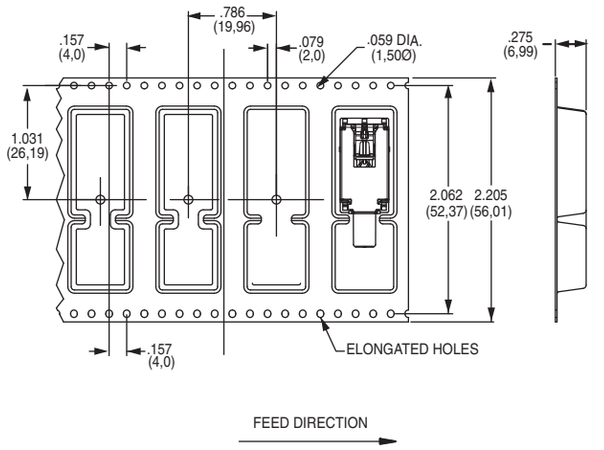

Third Angle Projection

Dimensions are shown: Inches (mm)
Specifications and dimensions subject to change

ELUM™ Series
Right Angle Illuminated Latching Pushbutton

AVAILABLE HARDWARE

Cap

PART NO.

957C00000 High temperature black cap with universal standby symbol

956C02000 High temperature black cap with no symbol

Material: 4/6 Nylon SMT compatible

Cap

PART NO.

181D01000 Paint and Laser Etched with black paint and universal standby symbol

Material: Clear polycarbonate

Cap

PART NO.

181D00000 Paint and laser etched with white paint underlay and black paint with universal standby symbol.

Material: Clear polycarbonate

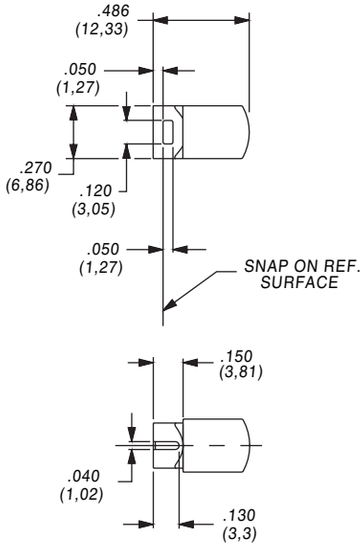

NOTE: Caps are for use with the C22 actuator style. Other colors and symbols available, consult Customer Service Center.

CAP INSTALLATION

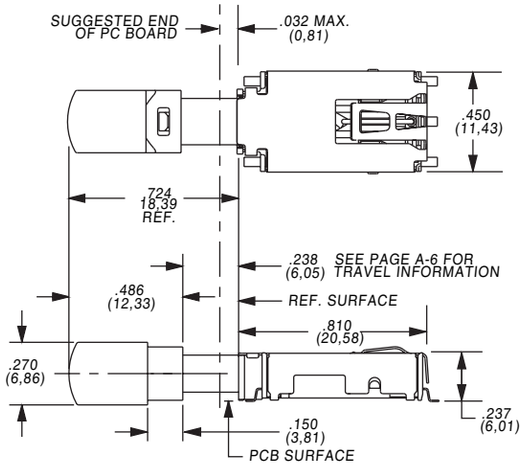

VIEW WITH 957C CAP INSTALLED

Third Angle Projection

Dimensions are shown: Inches (mm)
Specifications and dimensions subject to change

EP Series
Sealed Tiny Pushbutton Switches

Features/Benefits

- ***Sealed against solder & cleaning processes***
- ***Thru-hole and surface mount models***
- ***Snap-fitting actuator accepts standard caps***
- ***Tape & reel packaging available***
- ***RoHS compliant models available***

Models Available

Typical Applications

- ***Telecommunications and networking equipment***
- ***Computers and peripherals***
- ***Instrumentation and controls***

Specifications

CONTACT RATING: B contact material: 0.4 VA max. @ 20 V AC or DC max. See page A-13 for additional ratings.

ELECTRICAL LIFE: EP11, EP21 models: 60,000 make-and-break cycles at full load. EP12 models: 30,000 cycles.

CONTACT RESISTANCE: Below 20 mΩ typ. initial @ 2-4 V DC, 100 mA, for both silver and gold plated contacts.

INSULATION RESISTANCE: 10^9 Ω min.

DIELECTRIC STRENGTH: 1000 Vrms min. @ sea level.

OPERATING TEMPERATURE: –30°C to 85°C.

SOLDERABILITY: Per MIL-STD-202F method 208D, or EIA RS-186E method 9 (1 hour steam aging).

DEGREE OF PROTECTION: IP57; Protection against harmful dust deposit, full-scale voltage protection, temporary immersion.

PACKAGING: Surface mount switches standard in anti-static tape and reel packaging per EIA 481-3, see page A-14 for drawings and reel information. Tape and cover strip are conductive for use near statically sensitive components, consult Customer Service Center.

Materials

CASE & BUSHING: High temperature material, glass filled nylon 4/6, flame retardant, heat stabilized (UL 94V-0) on EP11 / EP12 models; glass filled nylon 6/6 on EP21.

PLUNGER: Thermoplastic polyester or glass filled nylon (UL 94V-0), with internal o-ring seal. SA surface mount: High temperature material, glass filled LCP (UL 94V-0).

SWITCH SUPPORT: Brass, matte-tin plated.

CONTACTS & TERMINALS: B contact material: Copper alloy, with gold plate over nickel plate. See page A-13 for additional contact materials.

TERMINAL SEAL: Epoxy.

NOTE: Any models supplied with Q, B, P, S, R or G contact material are RoHS compliant.

NOTE: Specifications and materials listed above are for switches with standard options. For information on specific and custom switches, consult Customer Service Center.

CAUTION: PC mounting layouts and pads as shown are designed to be compatible with the latest equipment and reflow techniques. Care should be taken in the design and location of PC lands to suit individual needs. Orientation relative to reflow direction may significantly impact solder joint integrity.

Build-A-Switch

To order, simply select desired option from each category and place in the appropriate box. Available options are shown and described on pages A-10 thru A-14. For additional options not shown in catalog, consult Customer Service Center. All models are process sealed to withstand machine soldering temperatures and pressure wash cleaning methods.

Switch Function
- **EP11** SPST Off-Mom.
- **EP12** SPDT On-Mom.
- **EP21** DPST Off-Mom.

Plunger
- **S** .215" high
- **S1** .110" high
- **S2** .465" high
- **FP** Flush
- **R** Snap-fitting, .215 high

Bushing
- **D1** Unthreaded

Terminations
- **A** Right angle, PC thru-hole
- **C** PC Thru-hole
- **AV** Vertical right angle, PC thru-hole
- **AV3** Vertical right angle, snap-in, PC thru-hole
- **SA** Right angle, surface mount
- **SA1** Right angle, surface mount rear facing
- **V3** Vertical mount, v-bracket
- **V31** Vertical mount, v-bracket, snap-in (EP11 & EP12 only)
- **W** Wire wrap

Contact Material
- **B** Gold
- **P** Gold, matte-tin
- **Q** Silver
- **S** Silver, matte-tin
- **G** Gold over silver
- **R** Gold over silver, matte tin

Seal
- **E** Epoxy

Dimensions are shown: Inches (mm)
Specifications and dimensions subject to change

EP Series
Sealed Tiny Pushbutton Switches

SWITCH FUNCTION

NO. POLES	MODEL NO.	SWITCH FUNCTION POS. 1 (C&K marking on opposite side)	SWITCH FUNCTION POS. 2 (C&K marking on opposite side)	CONNECTED TERMINALS POS. 1 (C&K marking on opposite side)	CONNECTED TERMINALS POS. 2 (C&K marking on opposite side)	SCHEMATIC
SP	EP11	OFF	MOM.	OPEN	1-3	SPST 1 3
	EP12	ON	MOM.	2-1	2-3	SPDT NC 1 2 (COMM) 3 NO

SPDT

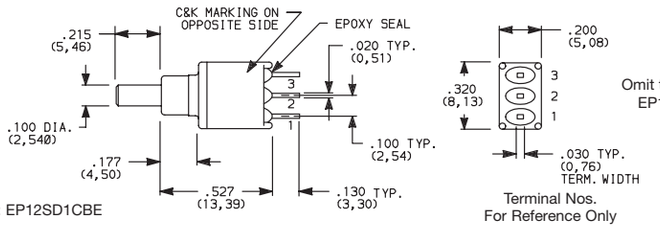

Omit terminal 2 for EP11 models.

Part number shown: EP12SD1CBE

DP	EP21	OFF	MOM.	OPEN	1-3,4-6	DPST 1 3 4 6

DPST

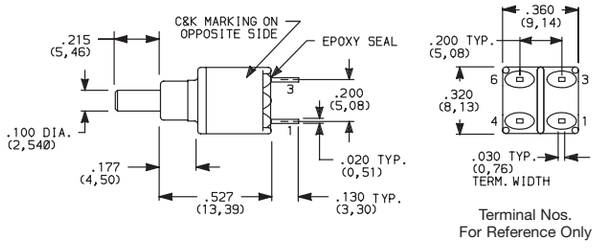

Part number shown: EP21SD1CBE

MOM. = Momentary

All models cULus with all options when ordered with G, Q, R or S contact material.

PLUNGER

S .215" HIGH

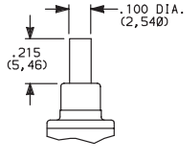

S1 .110" HIGH

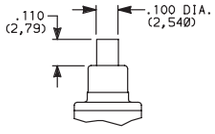

S2 .465" HIGH

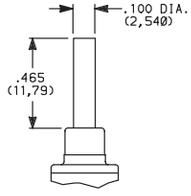

FP FLUSH PLUNGER

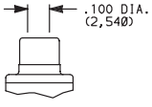

R SNAP-FITTING

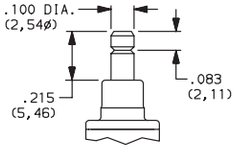

S1& S2 actuators are not available with EP12 & EP21 models.

FP & R actuators are not available with EP21 model.

NOTE: Caps available for plunger options, see page A-14.

BUSHING

D1 UNTHREADED

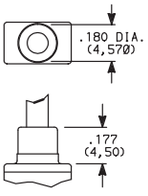

NOTE: Internal actuator o-ring standard.

Third Angle Projection

Dimensions are shown: Inches (mm)
Specifications and dimensions subject to change

TERMINATIONS

C PC THRU-HOLE

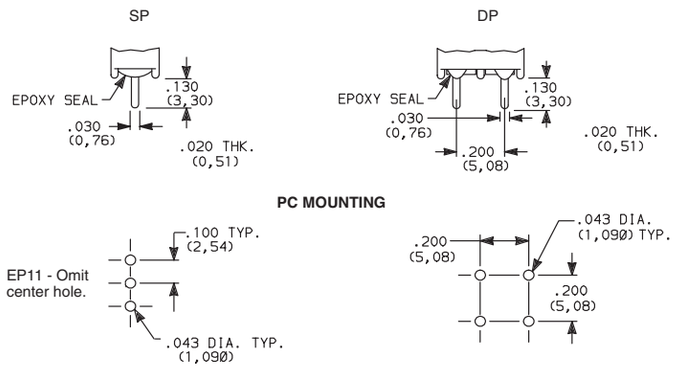

SP and DP

W WIRE WRAP

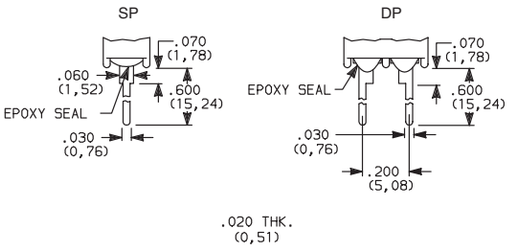

SP and DP

A RIGHT ANGLE, PC THRU-HOLE

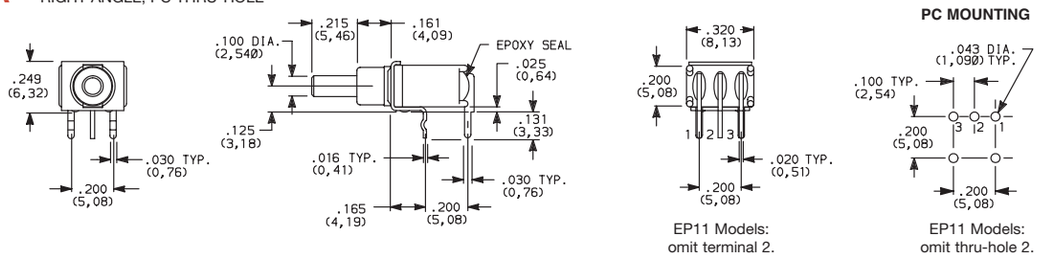

EP11 Models: omit terminal 2.

EP11 Models: omit thru-hole 2.

EP12SD1ABE
SPDT

A RIGHT ANGLE, PC THRU-HOLE

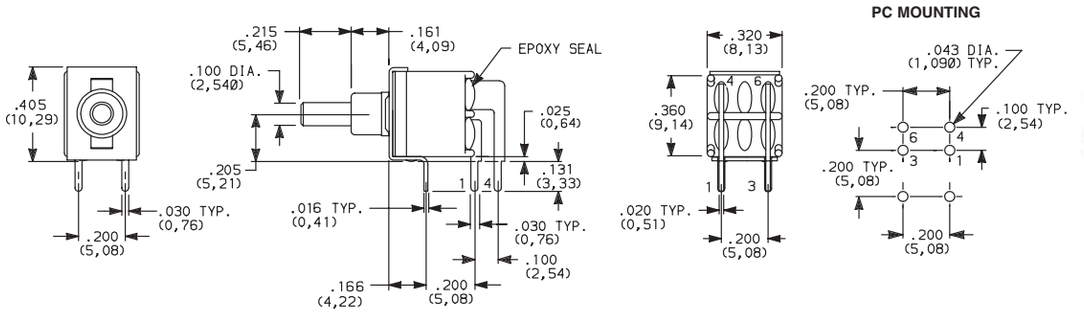

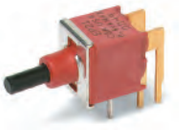

EP21SD1ABE
DPST

AV VERTICAL RIGHT ANGLE, PC THRU-HOLE

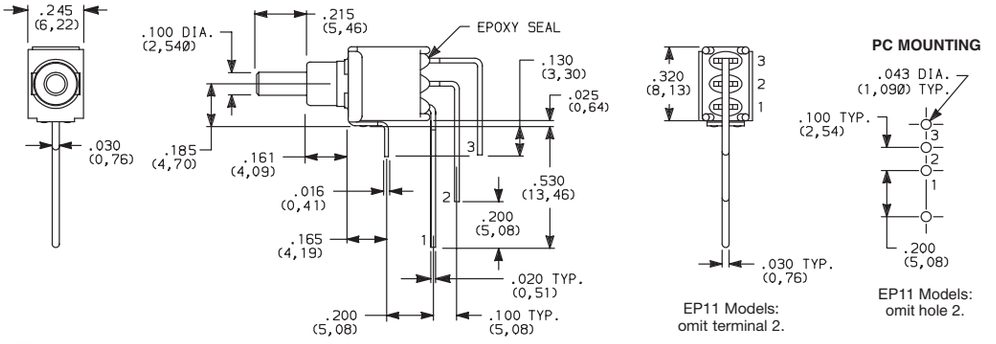

EP11 Models: omit terminal 2.

EP11 Models: omit hole 2.

EP12SD1AVBE
SPDT

NOTE: Terminal bend radii and lead-in manufacturing option.

Third Angle Projection

Dimensions are shown: Inches (mm)
Specifications and dimensions subject to change

EP Series
Sealed Tiny Pushbutton Switches

TERMINATIONS

AV VERTICAL RIGHT ANGLE, THRU-HOLE

EP21SD1AVBE
DPST

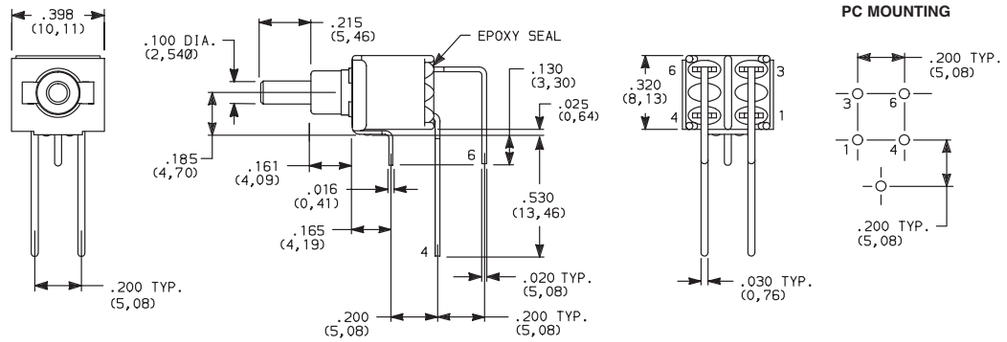

NOTE: Terminal bend radii and lead-in manufacturing option.

AV3 VERTICAL RIGHT ANGLE, SNAP-IN, PC THRU-HOLE

EP12SD1AV3BE
SPST

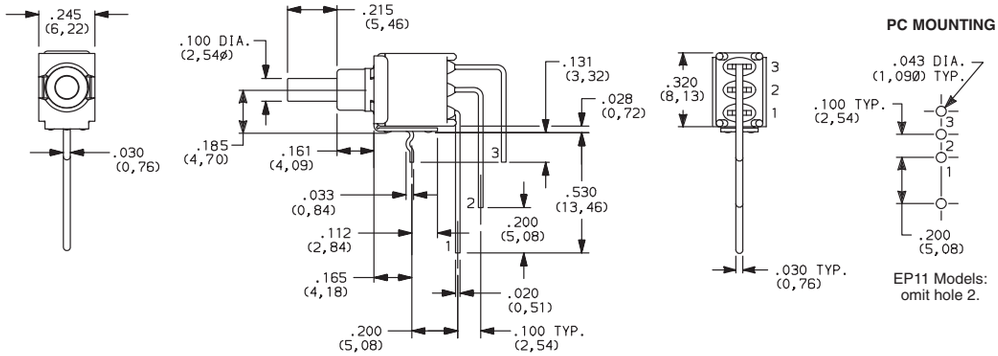

SA RIGHT ANGLE, SURFACE MOUNT

EP12SD1SAPE
SPDT

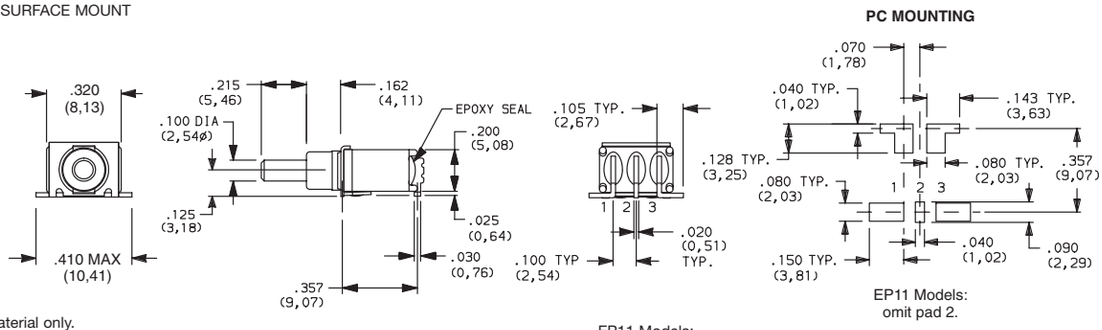

Available with P contact material only.
Not Available on DPST models.

SA1 RIGHT ANGLE, SURFACE MOUNT

EP12SD1SA1BE
SPDT

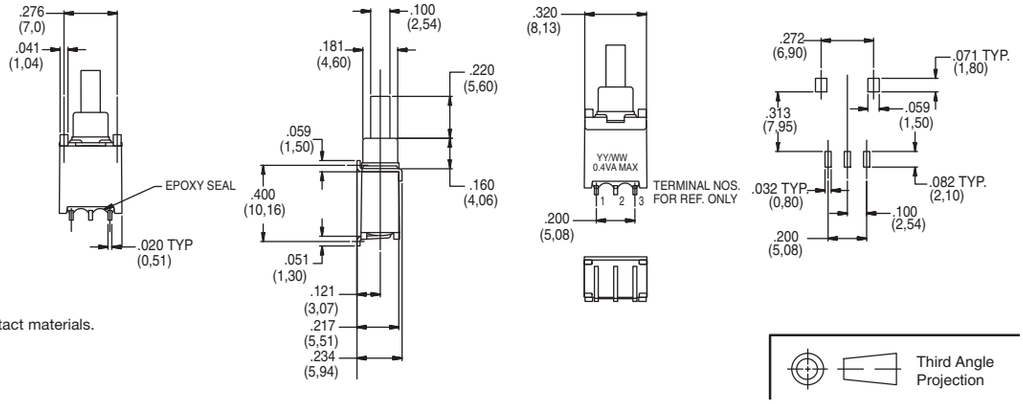

SA1 is only available with B and P contact materials.
Not Available on DPST models.

Third Angle Projection

Dimensions are shown: Inches (mm)
Specifications and dimensions subject to change

TERMINATIONS

V3 VERTICAL MOUNT, V-BRACKET

V31 VERTICAL MOUNT, V-BRACKET, SNAP-IN

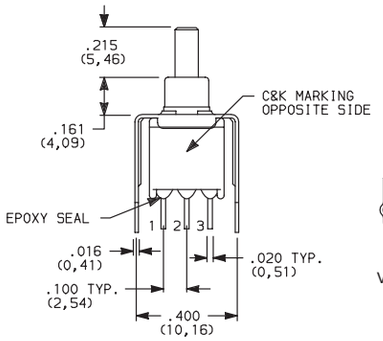

EP11 Models:
omit terminal 2.

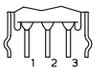

V31 SNAP-IN

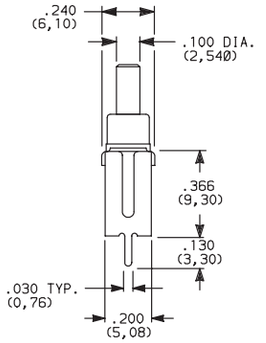

PC MOUNTING

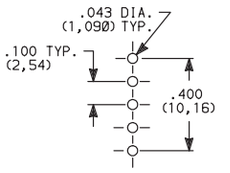

EP11 Models:
omit centerhole.

EP12SD1V3BE
SPDT

V3 VERTICAL MOUNT, V-BRACKET

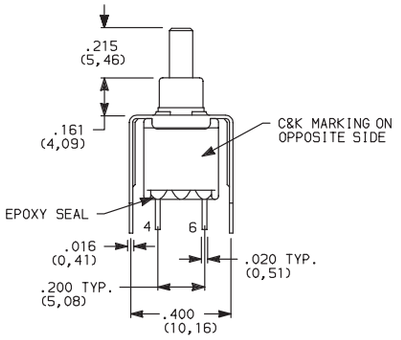

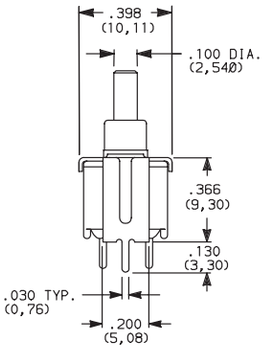

PC MOUNTING

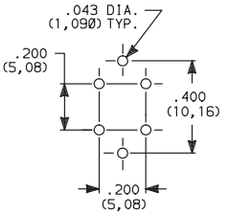

EP21SD1V3BE
DPST

CONTACT MATERIAL

OPTION CODE	CONTACT MATERIAL	TERMINAL PLATING	RATINGS	
B	GOLD [1]	GOLD [1]	LOW LEVEL/DRY CIRCUIT	0.4 VA MAX. @ 20 V AC OR DC MAX.
P		MATTE-TIN [6]		
Q	SILVER [4,5]	SILVER [5]	POWER	1 AMP @ 120 V AC OR 28 V DC.
S		MATTE-TIN [6]		
G	GOLD OVER SILVER [2,3]	GOLD [3]	LOW LEVEL/DRY CIRCUIT OR POWER	0.4 VA MAX @ 20 V AC OR DC MAX. OR 1 AMP @ 120 V AC OR 28 V DC.
R		MATTE-TIN [6]		

* Note: See Technical Data section of this catalog for RoHS compliant and compatible definitions and specifications.

[1] CONTACTS & TERMINALS: Copper alloy, with gold plate over nickel plate.
[2] END CONTACTS: Coin silver, with gold plate over nickel plate.
[3] CENTER CONTACTS & ALL TERMINALS: Copper alloy, with gold plate over nickel plate.
[4] END CONTACTS: Coin silver, silver plated.
[5] CENTER CONTACT & ALL TERMINALS: Copper alloy, silver plated.
[6] TERMINALS: Copper alloy, with matte tin over nickel plate.

NOTE: Any models supplied with Q, B P, S ,R or G contact material are RoHS compliant.

All models c UL us with all options when ordered with G, S, R or Q contact material.

SEAL

E EPOXY SEAL

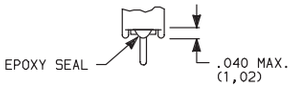

Third Angle Projection

Dimensions are shown: Inches (mm)
Specifications and dimensions subject to change

EP Series
Sealed Tiny Pushbutton Switches

AVAILABLE HARDWARE

Cap

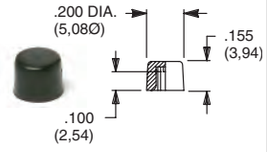

PART NO.

508101000 WHITE
508102000 BLACK
508103000 RED

Material: Nylon
Finish: Gloss

Not for use on S1 plunger

Cap

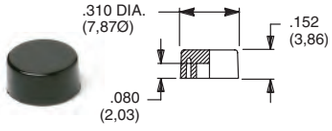

PART NO.

465801000 WHITE
465802000 BLACK
465803000 RED

Material: Nylon
Finish: Gloss

Not for use on S1 plunger

Cap
Compatible with snap-fitting plungers EP11 & EP12 Models. R option only.

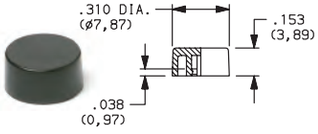

PART NO.

585A01000 WHITE
585A02000 BLACK
585A03000 RED

Material: Nylon
Finish: Gloss

Cap
Compatible with snap-fitting plungers EP11 & EP12 Models. R option only.

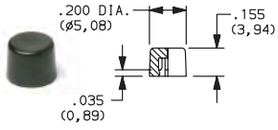

PART NO.

785A01000 WHITE
785A02000 BLACK
785A03000 RED

Material: Nylon
Finish: Gloss

NOTE: Other colors available, consult Customer Service Center.

TAPE & REEL

For part number EPXX-SA/SA1

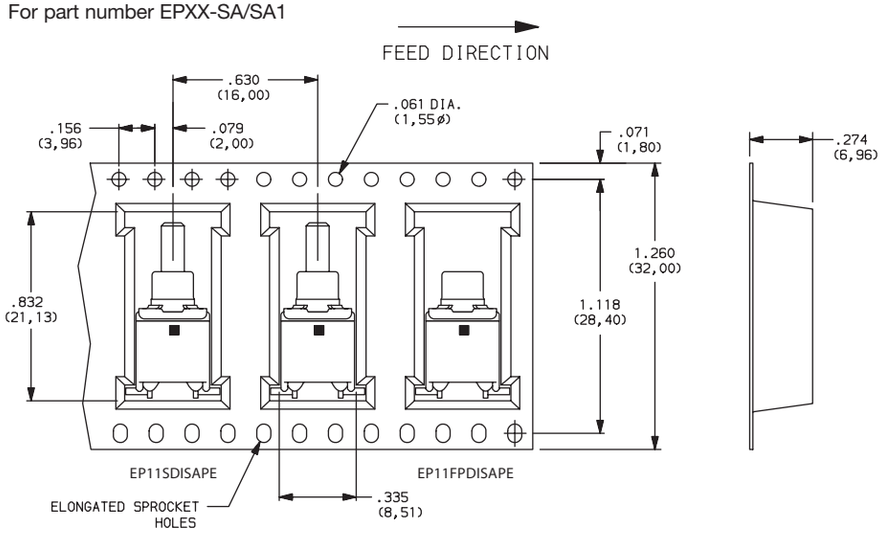

REEL INFORMATION	
OUTSIDE DIAMETER	13.00 (330,0)
PILOT HOLE	.512 (13,0)
QUANTITY PER REEL	600

Third Angle Projection

Dimensions are shown: Inches (mm)
Specifications and dimensions subject to change

TP Series
Tiny Pushbutton Switches

Features/Benefits

- ***Subminiature size—capable of switching 1 AMP***
- ***Vertical & right angle terminations***
- ***PC & panel mount models***
- ***Snap-in front panel mounting available***
- ***Epoxy terminal seal-compatible with bottom wash cleaning***
- ***RoHS compliant models available***

Models Available

Typical Applications

- ***Telecommunications and networking equipment***
- ***Computers and peripherals***
- ***Instrumentation and controls***

Specifications

CONTACT RATING: B contact material: 0.4 VA max. @ 20 V AC or DC max. Q contact material: 1 AMP @ 120 V AC or 28 V DC. See page A-19 for additional ratings.

ELECTRICAL LIFE: TP11, TP21 MODELS: 60,000 make-and-break cycles at full load. TP12 MODELS: 30,000 cycles.

CONTACT RESISTANCE: Below 20 mΩ typ. initial @ 2-4 V DC, 100 mA, for both silver and gold plated contacts.

INSULATION RESISTANCE: $10^9\Omega$ min.

DIELECTRIC STRENGTH: 1000 Vrms min. @ sea level.

OPERATING TEMPERATURE: –30°C to 85°C.

SOLDERABILITY: Per MIL-STD-202F method 208D, or EIA RS-186E method 9 (1 hour steam aging).

NOTE: Any models supplied with Q, B, P, R or G contact material are RoHS compliant.

NOTE: Specifications and materials listed above are for switches with standard options. For information on specific and custom switches, consult Customer Service Center.

Materials

CASE: Glass filled nylon 4/6 or 6/6, flame retardant, heat stabilized or diallyl phthalate (DAP), (UL 94V-0).

PLUNGER: Thermoplastic polyester (UL 94V-0).

CAP & FRAME: Nylon, black standard.

BUSHING: Brass, nickel plated.

HOUSING: Stainless steel.

SWITCH SUPPORT: Brass, matte-tin plated.

END CONTACTS: B contact material: Copper alloy, with gold plate over nickel plate. Q contact material: Coin silver, silver plated. See page A-19 for additional contact materials.

CENTER CONTACT & ALL TERMINALS: B contact material: Copper alloy, with gold plate over nickel plate. Q contact material: Copper alloy, silver plated. See page A-19 for additional contact materials.

TERMINAL SEAL: Epoxy. Refer to soldering and cleaning in Technical Data Chapter

HARDWARE: Nut & Locking Ring: Brass nickel plated. Lockwasher: Steel, nickel plated.

Build-A-Switch

To order, simply select desired option from each category and place in the appropriate box. Available options are shown and described on pages A-16 thru A-20. For additional options not shown in catalog, consult Customer Service Center. All models have epoxy terminal seal and are compatible with all “bottom-wash” PCB cleaning methods.

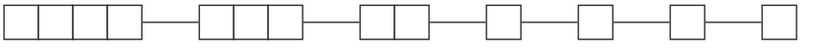

Switch Function
- **TP11** SPST Off-Mom.
- **TP12** SPDT On-Mom.
- **TP21** DPST Off-Mom.

Actuator or Bushing
- **SH** .155" high plunger, threaded, .220" high bushing, flat
- **SH8** .155" high plunger, unthreaded, .220" high bushing, round
- **SH9** .155" high plunger, unthreaded, .220" high bushing, flat
- **J81** Snap-in with frame
- **LT** .215" high plunger, threaded, .310" high bushing, flat
- **LT9** .215" high plunger, unthreaded, .310" high bushing, flat
- **MS9** .130" high plunger, .020" high bushing, round

Terminations
- **A** Right angle, PC thru-hole
- **C** PC Thru-hole
- **Z** Solder lug
- **AV** Vertical right angle, PC thru-hole
- **V3** Vertical mount, v-bracket
- **W** Wire wrap

Contact Material
- **B** Gold
- **P** Gold, matte-tin
- **Q** Silver
- **G** Gold over silver
- **R** Gold over silver, matte-tin

Seal
- **E** Epoxy

Cap Color
- **2** Black
- **NONE** Models with no cap
- **1** White

Frame Color
- **2** Black
- **NONE** Models with no frame

Dimensions are shown: Inches (mm)
Specifications and dimensions subject to change

TP Series
Tiny Pushbutton Switches

SWITCH FUNCTION

NO. POLES	MODEL NO.	SWITCH FUNCTION POS. 1	SWITCH FUNCTION POS. 2	CONNECTED TERMINALS POS. 1	CONNECTED TERMINALS POS. 2	SCHEMATIC
		C&K marking on opposite side		C&K marking on opposite side		
SP	TP11	OFF	MOM.	OPEN	1-3	SPST 1 3
	TP12	ON	MOM.	2-1	2-3	SPDT NC 1 2 (COMMON) 3 NO

SPDT

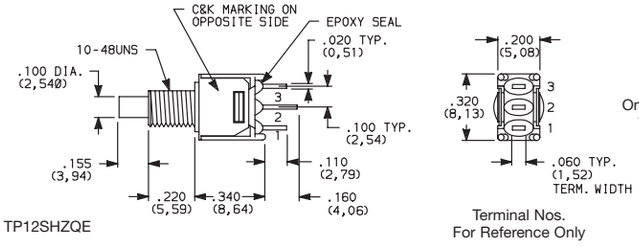

Omit terminal 2 for TP11 models.

Part number shown: TP12SHZQE

DP	TP21	OFF	MOM.	OPEN	1-3,4-6	DPST 1 3 4 6

DPST

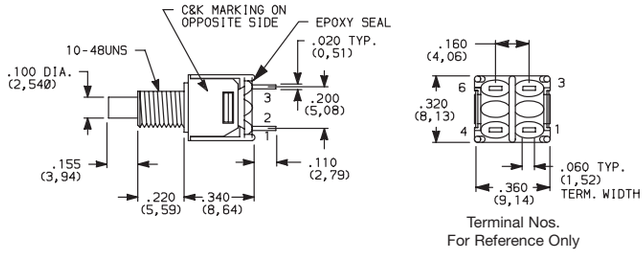

Part number shown: TP21SHZQE

MOM. = Momentary

All models ® with all options when ordered with G, Q or R contact material.

ACTUATOR—SNAP-IN FRONT MOUNT

CAP COLOR
ACTUATOR OR BUSHING
FRAME COLOR

J81 SNAP-IN WITH FRAME

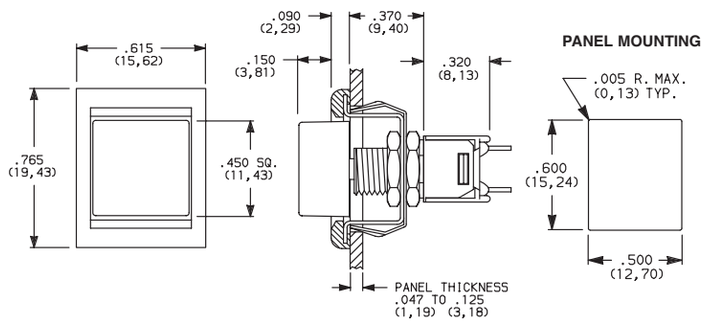

OPTION CODE	CAP COLOR
2	BLACK
1	WHITE

OPTION CODE	FRAME COLOR
2	BLACK
NONE	No Frame Color (J80 option)

Cap and Frame Finish: matte. Other colors available, consult Customer Service Center.

NOTE: Available with Z, C, or W terminations.

NOTE: Caps & frames available separately, see page A-20.

Third Angle Projection

Dimensions are shown: Inches (mm)
Specifications and dimensions subject to change

SH .155" HIGH PLUNGER, .220" HIGH BUSHING, THREADED, FLAT

SH8 .155" HIGH PLUNGER, .220" HIGH BUSHING, UNTHREADED

SH9 .155" HIGH PLUNGER, .220" HIGH BUSHING, UNTHREADED, FLAT

LT .215" HIGH PLUNGER, .310" HIGH BUSHING, THREADED

LT9 .215" HIGH PLUNGER, .310" HIGH BUSHING, UNTHREADED

MS9 .130" HIGH PLUNGER

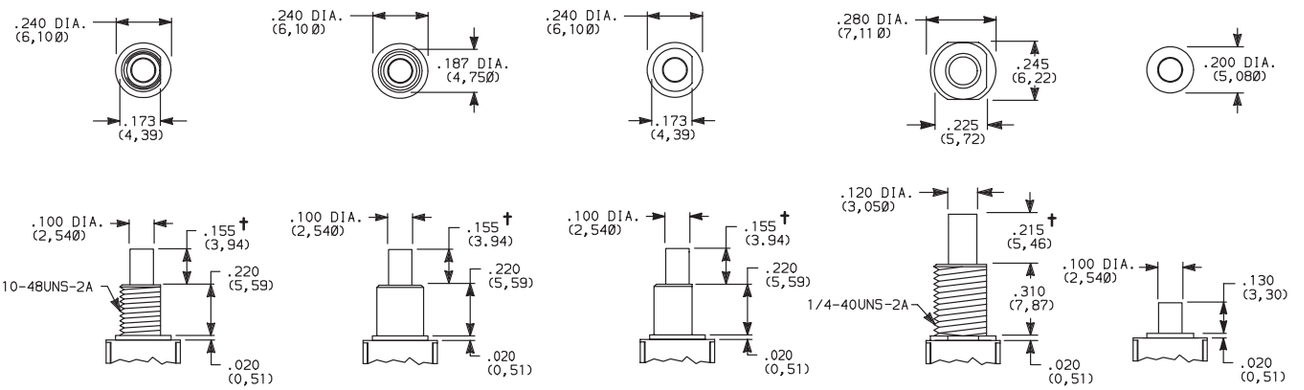

Standard with Z, C, W terminations.

Standard with A, AV, V3 terminations.

Not available with Z terminations.

† Subtract .016 (0,41) for models with A, AV or V3 terminations.

NOTE: Caps available for plunger options, see page A-20.

PANEL MOUNTING

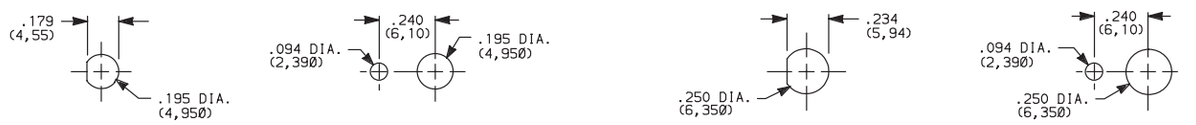

Without locking ring | With standard locking ring | Without locking ring | With standard locking rin

NOTE: One mounting nut, locking ring and lockwasher supplied standard with 10-48 threaded bushings (two nuts with 1/4-40 bushings). Optional mounting nut and locking ring styles and finishes available separately, see section "Technical Data and Additional Hardware".

TERMINATIONS

C PC THRU-HOLE

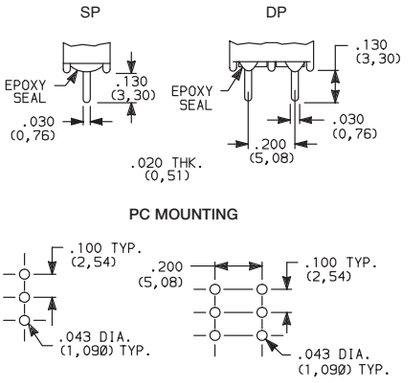

Omit center holes for TP11 models

Z SOLDER LUG

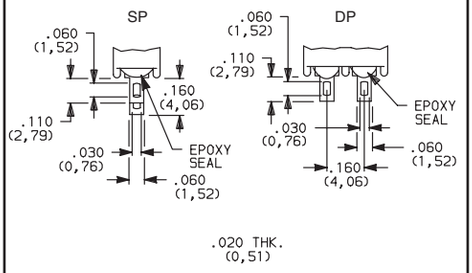

Not available with MS9 bushing or P or R contact material.

W WIRE WRAP

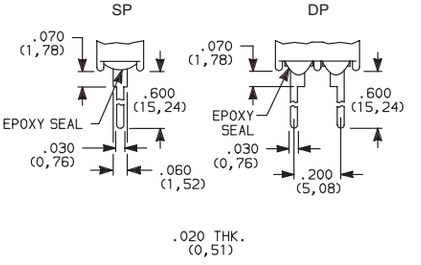

Third Angle Projection

Dimensions are shown: Inches (mm)
Specifications and dimensions subject to change

TP Series
Tiny Pushbutton Switches

TERMINATIONS

A RIGHT ANGLE, PC THRU-HOLE

TP12SH9ABE
SPDT

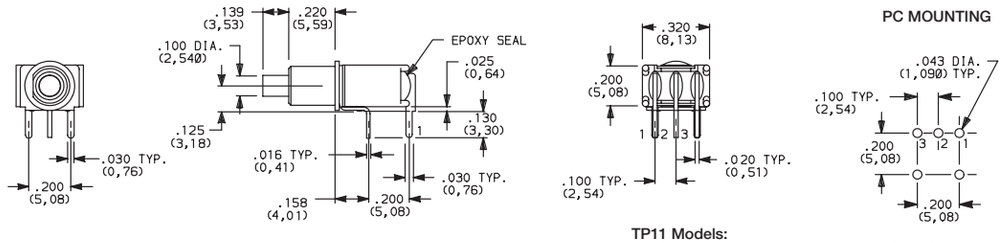

TP11 Models: omit terminal 2.

TP11 Models: omit hole 2.

A RIGHT ANGLE, PC THRU-HOLE

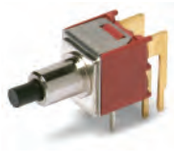

TP21SH9ABE
DPST

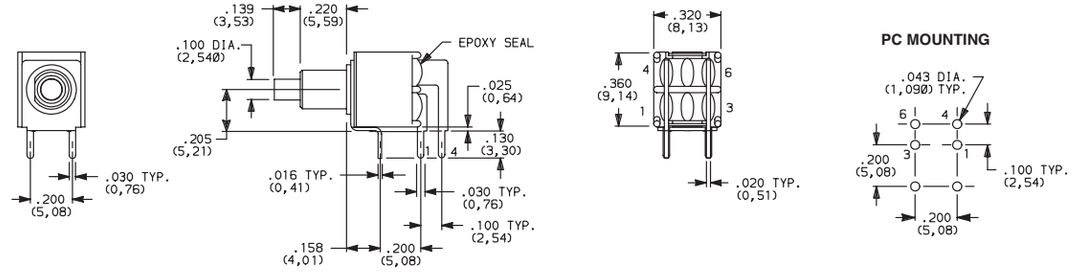

AV VERTICAL RIGHT ANGLE, PC THRU-HOLE

TP12SH9AVBE
SPDT

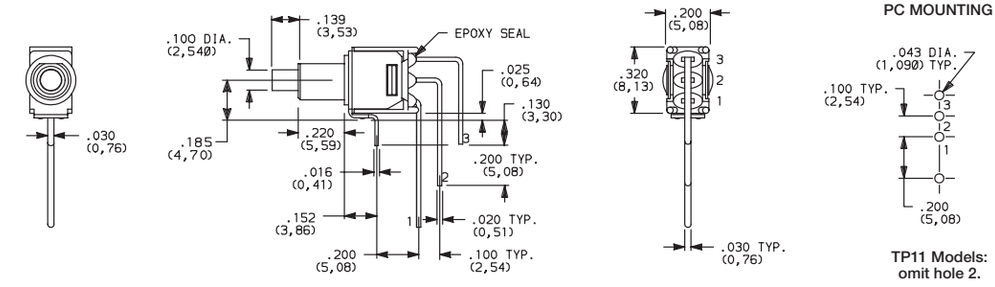

TP11 Models: omit terminal 2.

TP11 Models: omit hole 2.

NOTE: Terminal bend radii and lead-in manufacturing option.

AV VERTICAL RIGHT ANGLE, PC THRU-HOLE

TP21SH9AVBE
DPST

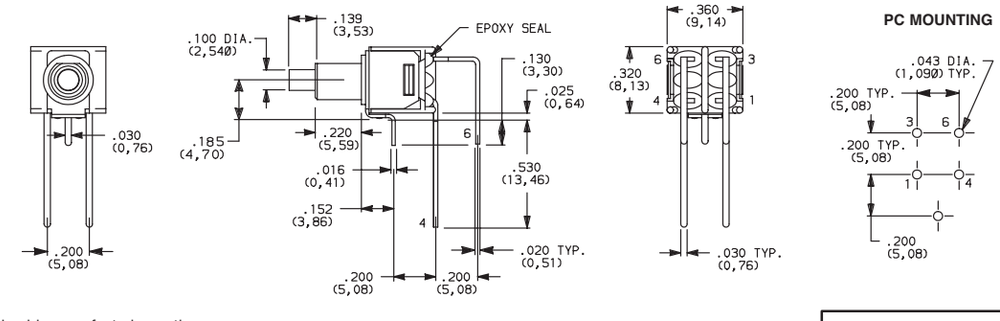

NOTE: Terminal bend radii and lead-in manufacturing option.

Third Angle Projection

Dimensions are shown: Inches (mm)
Specifications and dimensions subject to change

TERMINATIONS

V3 VERTICAL MOUNT, V-BRACKET

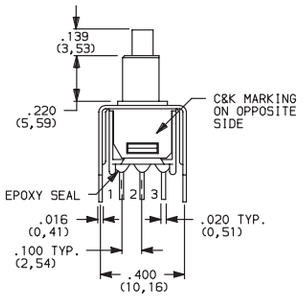

TP11 Models: omit terminal 2.

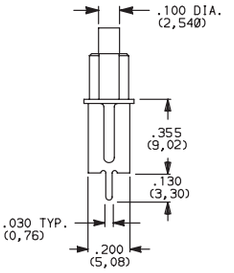

PC MOUNTING

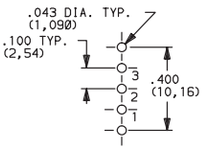

TP11 Models: omit hole 2.

TP12SH9V3BE
SPDT

V3 VERTICAL MOUNT, V-BRACKET

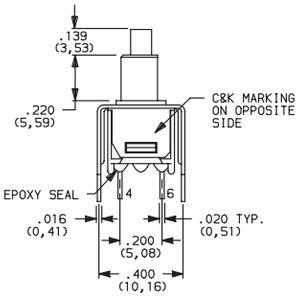

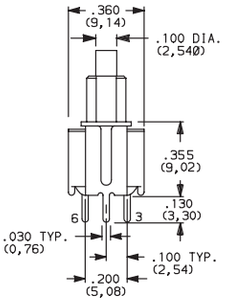

PC MOUNTING

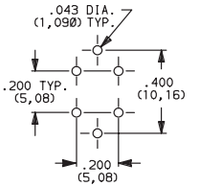

TP21SH9V3BE
DPST

CONTACT MATERIAL

OPTION CODE	CONTACT MATERIAL	TERMINAL PLATING	RATINGS	
B	GOLD [1]	GOLD [1]	LOW LEVEL/DRY CIRCUIT	0.4 VA MAX. @ 20 V AC OR DC MAX.
P		MATTE-TIN [6]		
Q	SILVER [4,5]	SILVER [5]	POWER	1 AMP @ 120 V AC OR 28 V DC.
G	GOLD OVER SILVER [2,3]	GOLD [3]	LOW LEVEL/DRY CIRCUIT OR POWER	0.4 VA MAX @ 20 V AC OR DC MAX. OR 1 AMP @ 120 V AC OR 28 V DC.
R		MATTE-TIN [6]		

* Note: See Technical Data section of this catalog for RoHS compliant and compatible definitions and specifications.

[1] CONTACTS & TERMINALS: Copper alloy, with gold plate over nickel plate.
[2] END CONTACTS: Coin silver, with gold plate over nickel plate.
[3] CENTER CONTACTS & ALL TERMINALS: Copper alloy, with gold plate over nickel plate.
[4] END CONTACTS: Coin silver, silver plated.
[5] CENTER CONTACT & ALL TERMINALS: Copper alloy, silver plated.
[6] TERMINALS: Copper alloy, with matte-tin over nickel plate.

NOTE: Any models supplied with P, R, Q, B or G contact material are RoHS compliant.

All models with all options when ordered with R, G, or Q contact material.
B contact material standard with A, AV, V3 & W terminations.
Q contact material standard with C & Z terminations
P, R contact materials not available with Z terminations.

SEAL

E EPOXY SEAL

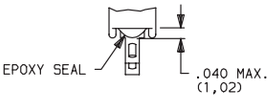

Third Angle Projection

Dimensions are shown: Inches (mm)
Specifications and dimensions subject to change

TP Series
Tiny Pushbutton Switches

AVAILABLE HARDWARE

Cap, .100" DIA. Plungers

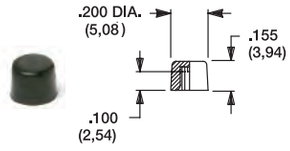

PART NO.

508101000 WHITE
508102000 BLACK

Material: Nylon
Finish: Gloss

Cap, .100" DIA. Plungers
(Recommended for S9 plunger)

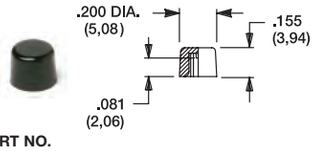

PART NO.

538701000 WHITE
538702000 BLACK

Material: Nylon
Finish: Gloss

Cap, .100" DIA. Plungers

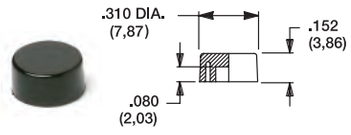

PART NO.

465801000 WHITE
465802000 BLACK

Material: Nylon
Finish: Gloss

Cap, .120" DIA. Plungers

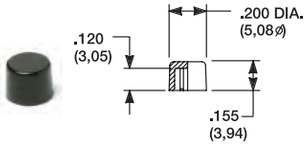

PART NO.

708901000 WHITE
708902000 BLACK

Material: Nylon
Finish: Gloss

Cap, .120" DIA. Plungers

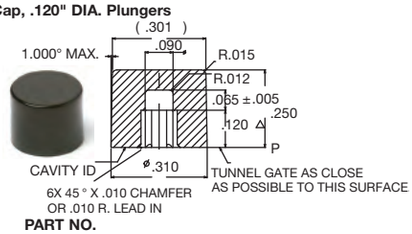

PART NO.

891D01000 WHITE
891D02000 BLACK

Material: Nylon
Finish: Gloss

Cap, J81 option only

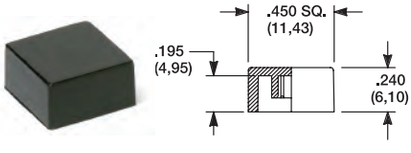

PART NO.

484601000 WHITE
484602000 BLACK

Material: Nylon
Finish: Gloss

PART NO.

798201000 WHITE
798202263 BLACK

Material: Nylon
Finish: Matte

NOTE: Additional nuts, locking rings and lockwashers available separately, see section "Technical Data and Additional Hardware".
Other cap colors available, consult Customer Service Center.

Frames snap into panel opening and are independent from switch mounting. Accurate positioning of the PC mounted switch relative to the panel opening is necessary to provide proper clearance between actuator and frame. Available in two basic styles and four panel thicknesses .047-.125 in. Material: Nylon. Finish: Matte.

TYPICAL APPLICATION

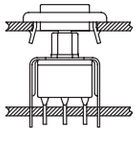

.047" (1,19) PANEL THK.	.062" (1,57) PANEL THK.	.090" (2,29) PANEL THK.	.125" (3,18) PANEL THK.
PART NO.	**PART NO.**	**PART NO.**	**PART NO.**
432502263	**432602263**	**432702263**	**432802263** BLACK

PANEL MOUNTING

For part numbers
432502263, 432602263

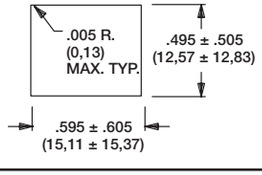

For part numbers
432702263, 432802263

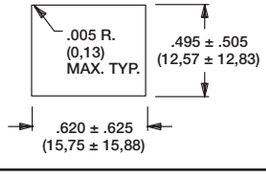

Panel Inserts

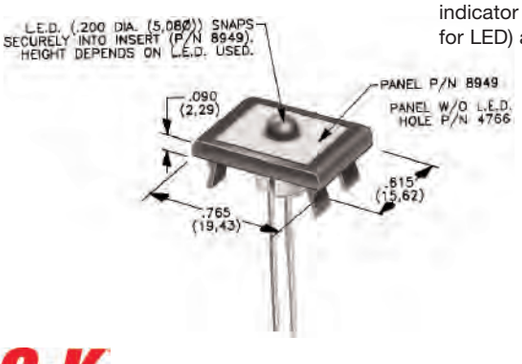

Above frames (part nos. 432XXXXXX) are also available with insert which accepts LED for indicator light assembly. Order insert separately from frame. Blank insert panel (without hole for LED) also available. **LED not included.**

PANEL INSERT WITH HOLE FOR LED	BLANK PANEL INSERT WITHOUT HOLE FOR LED
PART NO.	**PART NO.**
894902000	**476602000** BLACK

Third Angle Projection

Dimensions are shown: Inches (mm)
Specifications and dimensions subject to change

E020 Series
Sealed Snap-acting Momentary Pushbutton Switches

Features/Benefits

- ***Process sealed with disposable splashproof boot***
- ***Long life contact design***
- ***Snap-fitting plunger available***
- ***RoHS compliant models available***

Typical Applications

- ***Instrumentation***
- ***Telecommunications and networking equipment***
- ***Computers and peripherals***

Models Available

Specifications

CONTACT RATING: B contact material (EX25 Models): 0.4 VA max. @ 20 V AC or DC max. G contact material (EX21 Models): 1 AMP @120 V AC or 28 V DC or 0.4 VA max. @ 20 V AC or DC max. Note: Break-before-make contacts. Multi-pole contacts do not make and break simultaneously. See page A-26 for additional ratings.

ELECTRICAL LIFE: 60,000 make-and-break cycles at full load.

CONTACT RESISTANCE: Below 50 mΩ typ. initial @ 2–4 V DC, 100 mA, for both silver and gold plated contacts.

INSULATION RESISTANCE: 10^9Ω min.

DIELECTRIC STRENGTH: 1000 Vrms min. @ sea level.

OPERATING TEMPERATURE: –30°C to 75°C.

CAP INSTALLATION FORCE: 10 lbs. max. permissible.

SOLDERABILITY: Per MIL-STD-202F method 208D, or EIA RS-186E method 9 (1 hour steam aging).

NOTE: Any models supplied with P, R, B or G contact material are RoHS compliant.

NOTE: Specifications and materials listed above are for switches with standard options. For information on specific and custom switches, consult Customer Service Center.

Materials

CASE & BUSHING: Glass filled nylon 6/6, flame retardant (UL 94V-0).

PLUNGER: Glass filled nylon or glass filled polyester (PBT) (UL 94V-0).

SWITCH SUPPORT: Brass or steel, matte-tin.

SWITCH SUPPORT RETAINER: Stainless steel.

N.O. & N.C. CONTACTS: EX25 MODELS: B contact material: Copper alloy, with gold plate over nickel plate. EX21 MODELS: G contact material: Coin silver, with gold plate over nickel plate. See page A-26 for additional contact materials.

COMMON CONTACTS & ALL TERMINALS: Copper alloy, with gold plate over nickel plate. See page A-26 for additional contact materials.

TERMINAL SEAL: Epoxy.

DISPOSABLE BOOT: Vinyl splashproof boot supplied standard. Remove and discard only after soldering and cleaning processes are complete.

Build-A-Switch

To order, simply select desired option from each category and place in the appropriate box. Available options are shown and described on pages A-22 thru A-28. For additional options not shown in catalog, consult our Customer Service Center. All models are process sealed to withstand machine soldering temperatures and pressure wash cleaning methods.

Switch Function
- **E121** SPDT On-Mom. 1 Amp
- **E221** DPDT On-Mom. 1 Amp
- **E125** SPDT On-Mom. 0.4VA
- **E225** DPDT On-Mom. 0.4VA

Plunger
- **S** .282" high
- **M** .331" high, snap-fitting
- **S1** .332" high

Bushing
- **D1** Unthreaded
- **D3** .180" high, unthreaded

Terminations
- **A** Right angle, PC thru-hole
- **AV2** Vertical right angle, PC thru-hole
- **C** PC Thru-hole
- **A3** Right angle, snap-in, PC thru-hole
- **AV3** Vertical right angle, snap-in, PC thru-hole
- **V3** .460" high, V-bracket
- **V4** .630" high, V-bracket
- **V6** .460" high, V-bracket
- **V8** .953" high, V-bracket
- **V31** .460" high, snap-in V-bracket
- **V41** .630" high, snap-in V-bracket
- **V61** .460" high, snap-in V-bracket

Contact Material
- **B** Gold
- **G** Gold over silver
- **P** Gold, matte-tin
- **R** Gold over silver, matte-tin

Seal
- **E** Epoxy and disposable splashproof boot

Dimensions are shown: Inches (mm)
Specifications and dimensions subject to change

E020 Series
Sealed Snap-acting Momentary Pushbutton Switches

SWITCH FUNCTION

NO. POLES	MODEL NO.	SWITCH FUNCTION POS. 1 (C&K marking this side)	SWITCH FUNCTION POS. 2 (C&K marking this side)	CONNECTED TERMINALS POS. 1 (C&K marking this side)	CONNECTED TERMINALS POS. 2 (C&K marking this side)	SCHEMATIC
SP	E121	ON	MOM.	1-3	1-2	SPDT
	E125	ON	MOM.			
DP	E221	ON	MOM.	1-3,4-6	1-2,4-5	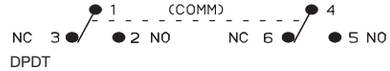 DPDT
	E225	ON	MOM.			

SPDT

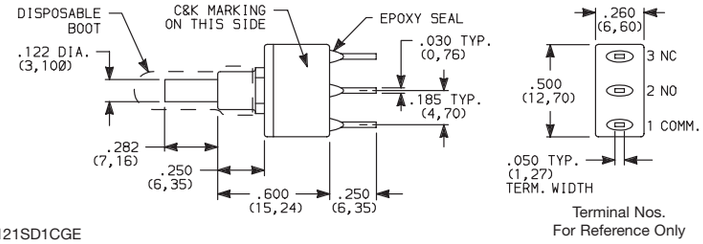

Part number shown: E121SD1CGE

DPDT

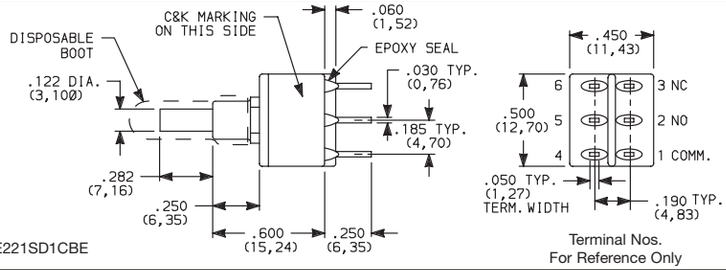

Part number shown: E221SD1CBE

MOM. = Momentary

E121, E221 models with all options when ordered with G or R contact material.

EX25 models must be ordered with B or P contact material.
EX21 models must be ordered with G or R contact material.

PLUNGER

S .282" HIGH

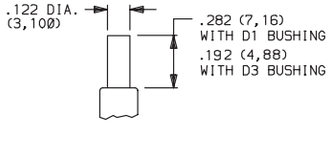

S1 .332" HIGH

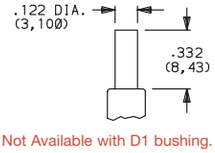

Not Available with D1 bushing.

M .332" HIGH SNAP-FITTING

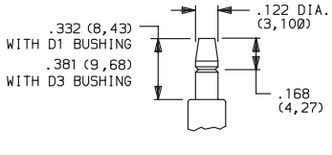

NOTE: Caps available for all plunger options, see page A-27.

BUSHING

D1 UNTHREADED

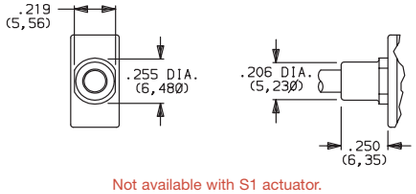

Not available with S1 actuator.

D3 .180" HIGH UNTHREADED

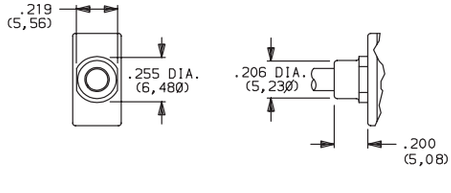

NOTE: Disposable splashproof vinyl over actuator and bushing supplied std., see page A-26.

Third Angle Projection

Dimensions are shown: Inches (mm)
Specifications and dimensions subject to change

TERMINATIONS

C PC THRU-HOLE

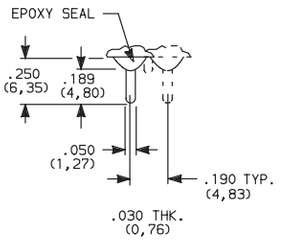

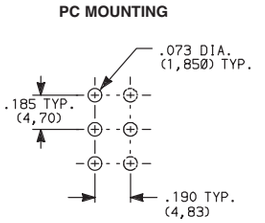

SPDT and DPDT

A RIGHT ANGLE, PC THRU-HOLE

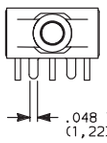

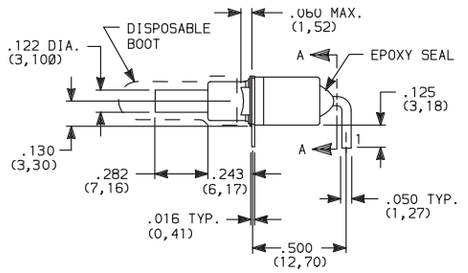

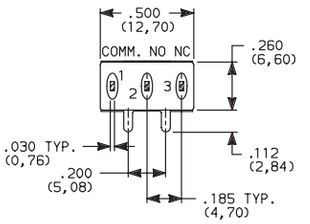

SECTION A-A

E121SD1AGE
SPDT

A3 RIGHT ANGLE, SNAP-IN, PC THRU-HOLE

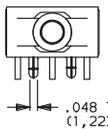

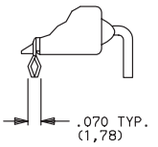

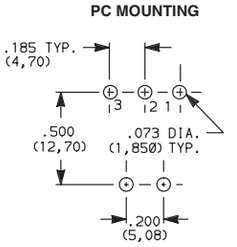

NOTE: Terminal bend radii and lead-in manufacturing option.

A RIGHT ANGLE, PC THRU-HOLE

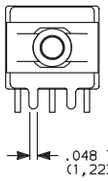

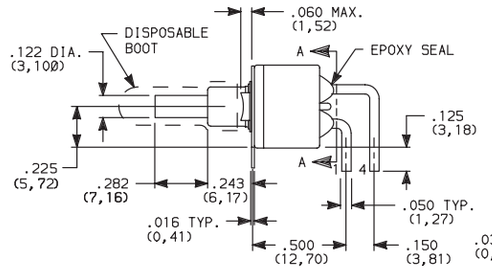

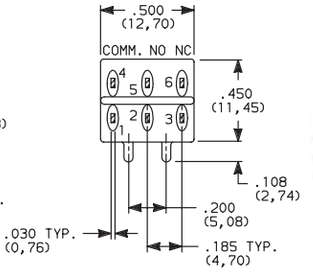

SECTION A-A

E221SD1AGE
DPDT

A3 RIGHT ANGLE, SNAP-IN, PC THRU-HOLE

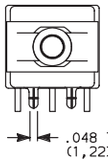

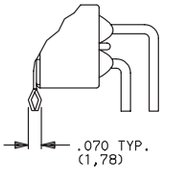

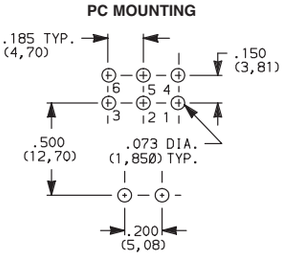

NOTE: Terminal bend radii and lead-in manufacturing option.

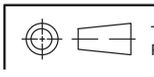

Third Angle Projection

Dimensions are shown: Inches (mm)
Specifications and dimensions subject to change

E020 Series
Sealed Snap-acting Momentary Pushbutton Switches

TERMINATIONS

AV2
VERTICAL RIGHT ANGLE, PC THRU-HOLE,
.150" PITCH

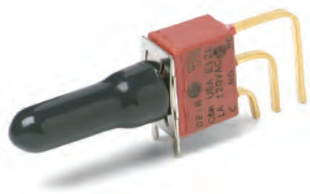

E121SD1AV2GE
SPDT

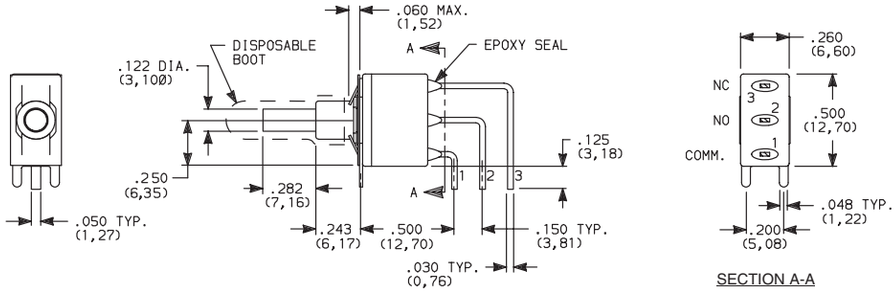

AV3
VERTICAL RIGHT ANGLE, SNAP-IN, PC THRU-HOLE,
.150" PITCH

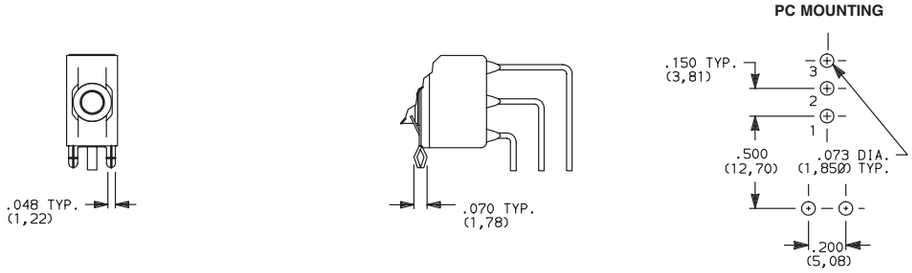

NOTE: Terminal bend radii and lead-in manufacturing option.

AV2
VERTICAL RIGHT ANGLE, PC THRU-HOLE,
.150" PITCH

E221SD1AV2GE
DPDT

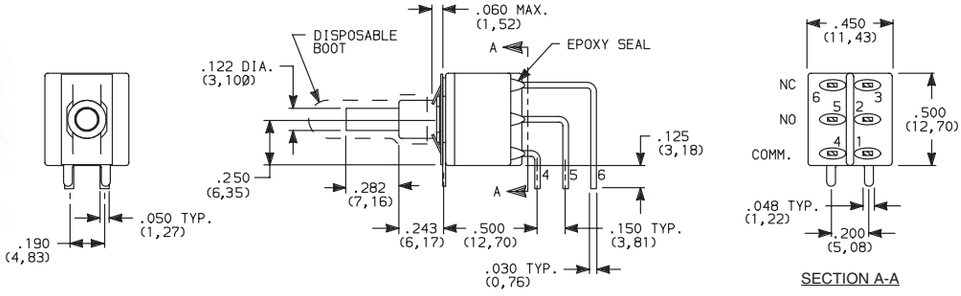

AV3
VERTICAL RIGHT ANGLE, SNAP-IN, PC THRU-HOLE,
.150" PITCH

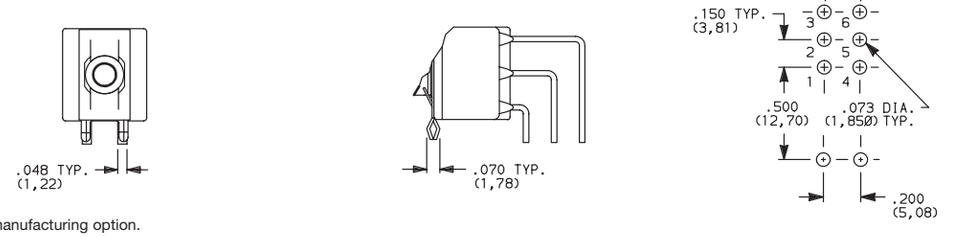

NOTE: Terminal bend radii and lead-in manufacturing option.

Third Angle Projection

Dimensions are shown: Inches (mm)
Specifications and dimensions subject to change

TERMINATIONS

V3, V4 VERTICAL MOUNT, V-BRACKET

V31, V41 VERTICAL MOUNT, V-BRACKET, SNAP-IN

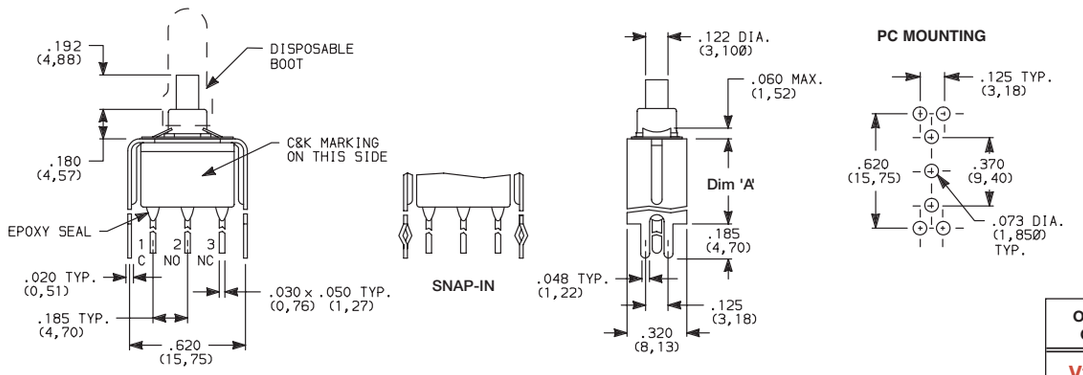

E121SD3__GE
SPDT

OPTION CODE	DIM 'A'
V3, V31	.460 (11,68)
V4, V41	.630 (16,00)

V3, V4 VERTICAL MOUNT, V-BRACKET

V31, V41 VERTICAL MOUNT, V-BRACKET, SNAP-IN

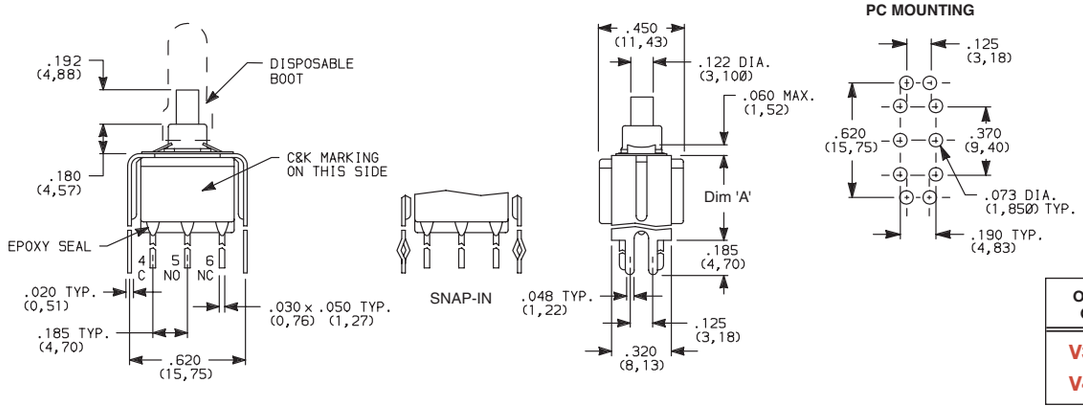

E221SD3__GE
DPDT

OPTION CODE	DIM 'A'
V3, V31	.460 (11,68)
V4, V41	.630 (16,00)

V6, V8 VERTICAL MOUNT, V-BRACKET

V61, V81 VERTICAL MOUNT, V-BRACKET, SNAP-IN

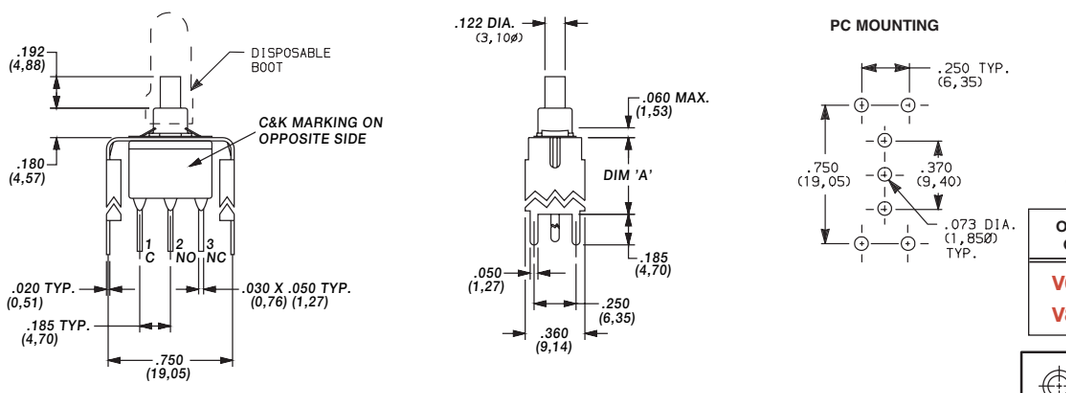

E121SD3__GE
SPDT

OPTION CODE	DIM 'A'
V6, V61	.460 (11,68)
V8, V81	.953 (24,21)

Third Angle Projection

Dimensions are shown: Inches (mm)
Specifications and dimensions subject to change

E020 Series
Sealed Snap-acting Momentary Pushbutton Switches

TERMINATIONS

V6, V8 VERTICAL MOUNT, V-BRACKET

V61, V81 VERTICAL MOUNT, V-BRACKET, SNAP-IN

E221SD3V6GE
DPDT

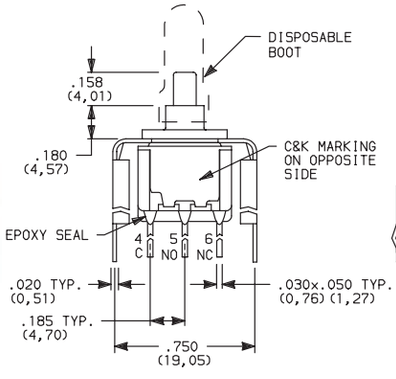

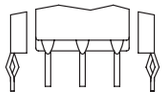

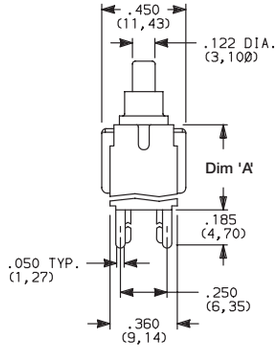

PC MOUNTING

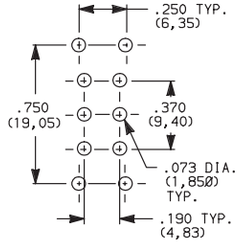

OPTION CODE	DIM 'A'
V6, V61	.460 (11,68)
V8, V81	.953 (24,21)

CONTACT MATERIAL

OPTION CODE	CONTACT MATERIAL	TERMINAL PLATING	RATINGS	
B	GOLD [1]	GOLD [1]	LOW LEVEL/DRY CIRCUIT	EX25 MODELS ONLY: 0.4 VA MAX. @ 20 V AC OR DC MAX.
P		MATTE-TIN [4]		
G	GOLD OVER SILVER [2,3]	GOLD [3]	LOW LEVEL/DRY CIRCUIT OR POWER	EX21 MODELS ONLY: 0.4 VA MAX @ 20 V AC OR DC MAX. OR 1 AMP @ 120 V AC OR 28 V DC.
R		MATTE-TIN [4]		

* Note: See Technical Data section of this catalog for RoHS compliant and compatible definitions and specifications.

[1] CONTACTS & TERMINALS: Copper alloy, with gold plate over nickel plate.
[2] N.O. AND N.C. CONTACTS: Coin silver, with gold plate over nickel plate.
[3] COMMON CONTACTS & ALL TERMINALS: Copper alloy, with gold plate over nickel plate.
[4] TERMINALS: Copper alloy, with matte-tin alloy over nickel plate.

NOTE: Any models supplied with P, R, B or G contact material are RoHS compliant.

E121, E221 models c UL us with all options when ordered with mandatory G, or R contact material.

P or B contact material must be ordered with EX25 models.

R or G contact material must be ordered with EX21 models.

SEAL

E EPOXY SEAL AND DISPOSABLE SPLASHPROOF BOOT

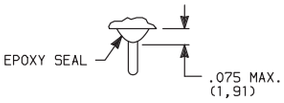

Disposable splashproof boot supplied standard. Remove and discard boot *only after* soldering and cleaning processes are complete.

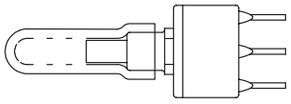

Third Angle Projection

Dimensions are shown: Inches (mm)
Specifications and dimensions subject to change

AVAILABLE HARDWARE

Cap

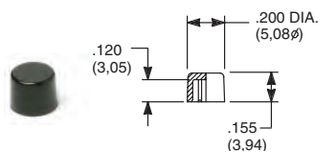

PART NO.

708901000	WHITE
708902000	BLACK
708903000	RED

Material: Nylon
Finish: Gloss

Cap

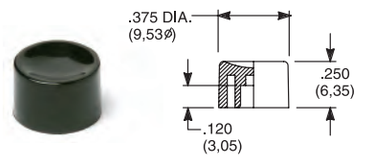

PART NO.

752701000	WHITE
752702000	BLACK
752703000	RED

Material: Nylon
Finish: Gloss

Cap

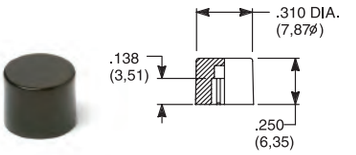

PART NO.

801801000	WHITE
801802000	BLACK
801803000	RED

Material: Nylon
Finish: Gloss

Cap, Snap-fitting plunger

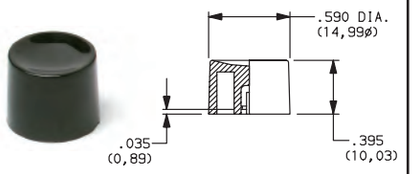

PART NO.

452D01000	WHITE
452D02000	BLACK
452D03000	RED

Material: Nylon
Finish: Gloss

Cap, Snap-fitting plunger

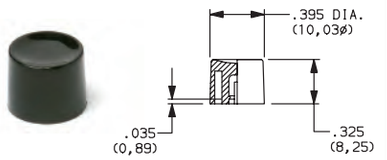

PART NO.

894101000	WHITE
894102000	BLACK
894103000	RED

Material: Nylon
Finish: Gloss

Cap

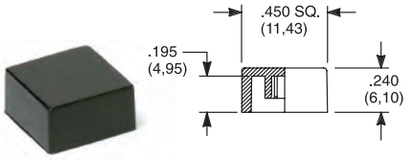

PART NO.

484601000	WHITE
484602000	BLACK
484603000	RED

Material: Nylon
Finish: Gloss

PART NO.

798201000	WHITE
798202263	BLACK
798203000	RED

Material: Nylon
Finish: Matte

NOTE: Other cap colors available, consult Customer Service Center.

Frames snap into panel opening and are independent from switch mounting. Accurate positioning of the PC mounted switch relative to the panel opening is necessary to provide proper clearance between actuator and frame. Available in two basic styles and four panel thicknesses .047-.125 in. Material: Nylon. Finish: Matte.

TYPICAL APPLICATION

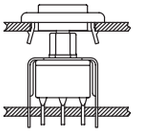

.047" (1,19) PANEL THK.	.062" (1,57) PANEL THK.	.090" (2,29) PANEL THK.	.125" (3,18) PANEL THK.
PART NO.	**PART NO.**	**PART NO.**	**PART NO.**
432502263	432602263	432702263	432802263 BLACK

PANEL MOUNTING

For part numbers
4325xxxxx, 4326xxxxx

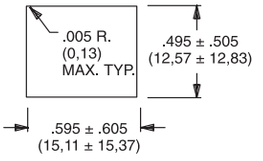

For part numbers
4327xxxxx, 4328xxxxx

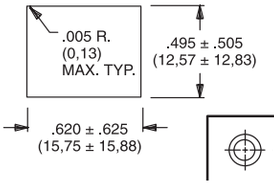

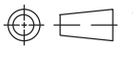

Third Angle Projection

Dimensions are shown: Inches (mm)
Specifications and dimensions subject to change

E020 Series
Sealed Snap-acting Momentary Pushbutton Switches

AVAILABLE HARDWARE

PANEL INSERTS

Above frames (part nos. 432XXXXXX) are also available with insert which accepts LED for indicator light assembly. Order insert separately from frame. Blank insert panel (without hole for LED) also available. **LED not included.**

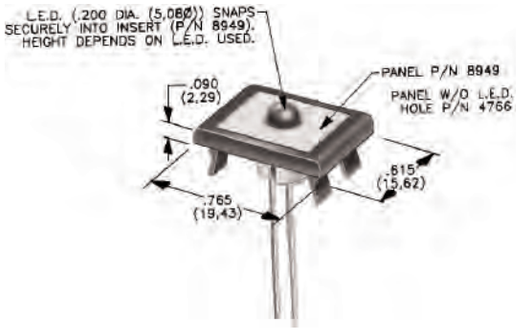

PANEL INSERT WITH HOLE FOR LED	BLANK PANEL INSERT WITHOUT HOLE FOR LED	
PART NO.	**PART NO.**	
894902000	476602000	BLACK

Special colors, custom markings available, consult Customer Service Center.

Third Angle Projection

Dimensions are shown: Inches (mm)
Specifications and dimensions subject to change

8020 Series
Snap-acting Momentary Pushbutton Switches

Features/Benefits

- ***Positive tactile feel***
- ***Multi-positions available***
- ***Wide variety of termination options***
- ***Epoxy terminal seal compatible with bottom wash cleaning***
- ***RoHS compliant models available***

Models Available

Typical Applications

- ***Instrumentation***
- ***Computer peripherals***
- ***Telecommunications equipment***

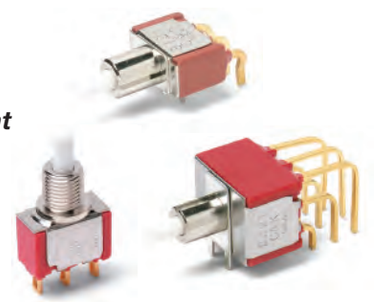

Specifications

CONTACT RATING: B contact material (8X25 Models): 0.4 VA max. @ 20 V AC or DC maximum. G contact material (8X21, U8X1 Models): 1 AMP @ 120 V AC or 28 V DC or 0.4 VA max. @ 20 V AC or DC max. Note: Break-before-makecontacts. Multi-pole contacts do not make and break simultaneously. See page A-43 for additional ratings.

ELECTRICAL LIFE: 60,000 make-and-break cycles at full load.

CONTACT RESISTANCE: Below 50 mΩ typ. initial @ 2-4 V DC, 100 mA, for both silver and gold plated contacts.

INSULATION RESISTANCE: 10^9Ω min.

DIELECTRIC STRENGTH: 1,000 Vrms min. @ sea level.

OPERATING TEMPERATURE: 8X2X MODELS: –30°C to 75°C. U8X1 MODELS: –30°C to 65°C.

CAP INSTALLATION FORCE: 10 lbs. max. permissible.

SOLDERABILITY: Per MIL-STD-202F method 208D, or EIA RS-186E method 9 (1 hour steam aging).

NOTE: Any models supplied with B, P, R, or G contact material are RoHS compliant.

NOTE: Specifications and materials listed above are for switches with standard options. For information on specific and custom switches, consult Customer Service Center.

Materials

CASE: Glass filled nylon 6/6 or diallyl phthalate (DAP), flame retardant (UL 94V-0).

PLUNGER: Glass filled nylon or glass filled polyester (PBT) (UL 94V-0).

CAP & FRAME: Nylon, black, standard.

BUSHING: Brass or zinc, nickel plated.

HOUSING: Stainless steel.

SWITCH SUPPORT: Brass or steel, matte-tin plated.

N.O. & N.C. CONTACTS: 8X21, U8X1 MODELS: G contact material: Coin silver, with gold plate over nickel plate. See page A-43 for additional contact materials.
8X25 MODELS: B contact material: Copper alloy, with gold plate over nickel plate. See page A-43 for additional contact materials.

COMMON CONTACT & ALL TERMINALS: Copper alloy, with gold plate over nickel plate.

TERMINAL SEAL: Epoxy. Refer to soldering and cleaning Technical Data Chapter.

HARDWARE: Nut & Locking Ring: Brass, nickel plated; Lockwasher: Steel, nickel plated.

Build-A-Switch

To order, simply select desired option from each category and place in the appropriate box. Available options are shown and described on pages A-30 thru A-45. For additional options not shown in catalog, consult Customer Service Center. All models have epoxy terminal seal and are compatible with all "bottom-wash" PCB cleaning methods.

Switch Function
- **8121** SPDT On-Mom. 1 Amp
- **8125** SPDT On-Mom. 0.4VA
- **8221** DPDT On-Mom. 1 Amp
- **8225** DPDT On-Mom. 0.4VA
- **8321** 3PDT On-Mom. 1 Amp
- **8325** 3PDT On-Mom. 0.4VA
- **8421** 4PDT On-Mom. 1 Amp
- **8425** 4PDT On-Mom. 0.4VA

Note: UL models available, see page A-30 and A-31.

Actuator or Plunger
- **S** Plunger
- **NONE** Snap-in
- **J80** Snap-in
- **J81** Snap-in w/frame
- **J82** Snap-in w/frame for LED
- **J83** Snap-in w/frame & flush cap
- **J84** Snap-in w/frame for LED, flush cap
- **J85** Snap-in w/frame & LED
- **J95** PC w/V-bracket & LED
- **L** Plunger
- **M** Snap-fitting plunger

Bushing
- **D9** .280" high, keyway
- **H** .250" high, flat
- **NONE** No bushing choice required
- **D** .280" high, keyway
- **D2** .288" high, flat
- **D3** .180" high
- **D8** .288" high, flat
- **H9** .250" high, flat, hi torque
- **Y** .350" high, keyway
- **Y3** 6.35mm high, keyway, hi torque
- **Y4** .378" high, flat, hi torque
- **Y9** .350" high, keyway

Contact Material
- **B** Gold
- **P** Gold, matte-tin
- **G** Gold over silver
- **R** Gold over silver, matte-tin

Seal
- **E** Epoxy
- **I** Epoxy potted base

Cap Color
- **2** Black
- **NONE** Models without caps
- **1** White
- **3** Red
- **4** Orange
- **5** Yellow
- **6** Green
- **7** Blue
- **9** Gray

Frame Color
- **2** Black
- **NONE** Models without frame
- **1** White
- **3** Red
- **5** Yellow
- **6** Green
- **9** Gray

LED Color
- **3** Red
- **NONE** Models without LED
- **5** Yellow
- **6** Green

Terminations
- **A** Right angle, PC thru-hole
- **AV2** Vertical right angle, PC thru-hole
- **C** PC Thru-hole
- **Z** Solder lug
- **A2** Right angle, PC thru-hole
- **A3** Right angle, snap-in, PC thru-hole
- **A4** Right angle, PC thru-hole, reversed terminals
- **A6** Right angle, PC thru-hole
- **AV1** Vertical right angle, PC thru-hole
- **AV3** Vertical right angle, snap-in, PC thru-hole
- **R** Right angle with PCB
- **R2** Right angle with PCB, reversed terminals
- **V2** .555" high, V-bracket
- **V3** .460" high, V-bracket
- **V4** .630" high, V-bracket
- **V6** .460" high, V-bracket
- **V7** .630" high, V-bracket
- **V8** .953" high, V-bracket
- **V9** 1.150" high, V-bracket
- **V31** .460" high, snap-in V-bracket
- **V61** .460" high, snap-in V-bracket
- **W** .750" long, wire wrap
- **W1** .964" long, wire wrap
- **W3** .425" long, wire wrap
- **W4** 1.062" long, wire wrap
- **Z3** Quick connect

Dimensions are shown: Inches (mm)
Specifications and dimensions subject to change

8020 Series
Snap-acting Momentary Pushbutton Switches

SWITCH FUNCTION

NO. POLES	MODEL NO.	UL/CSA* MODEL NO.	SWITCH FUNCTION POS. 1 (C&K marking on opposite side)	SWITCH FUNCTION POS. 2	CONNECTED TERMINALS POS. 1 (C&K marking on opposite side)	CONNECTED TERMINALS POS. 2	SCHEMATIC
SP	8121	U811	ON	MOM.	1-3	1-2	SPDT
	8125		ON	MOM.			

SPDT

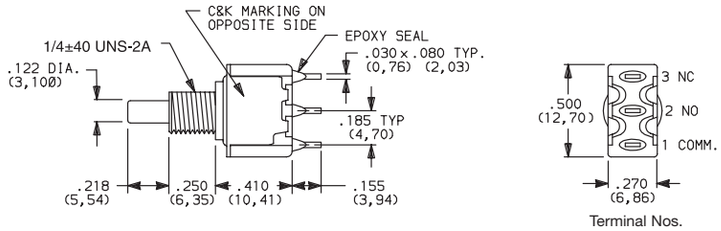

Part number shown: 8121SHZGE

Terminal Nos. For Reference Only

DP	8221	U821	ON	MOM.	1-3,4-6	1-2,4-5	DPDT
	8225		ON	MOM.			

DPDT

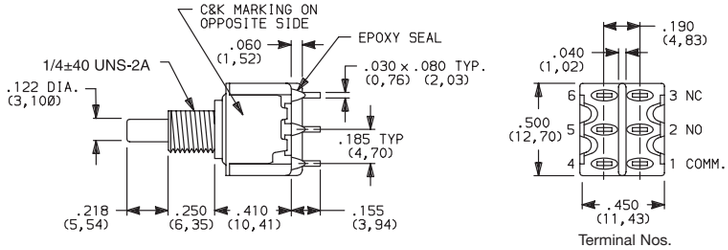

Part number shown: 8221SHZGE

Terminal Nos. For Reference Only

3P	8321	U831	ON	MOM.	1-3,4-6,7-9	1-2,4-5,7-8	3PDT
	8325		ON	MOM.			

3PDT

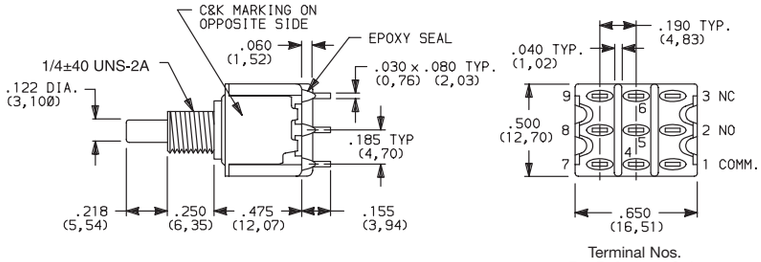

Part number shown: 8321SHZGE

Terminal Nos. For Reference Only

MOM. = Momentary

*U811 thru U841 model numbers c UL us with all options (except R, R2 terminations) when ordered with G or R contact material.

8X25 models must be ordered with B or P contact material.

8X21 and U8X1 models must be ordered with G or R contact material.

Third Angle Projection

Dimensions are shown: Inches (mm)
Specifications and dimensions subject to change

8020 Series
Snap-acting Momentary Pushbutton Switches

SWITCH FUNCTION

NO. POLES	MODEL NO.	UL/CSA* MODEL NO.	SWITCH FUNCTION POS. 1	SWITCH FUNCTION POS. 2	CONNECTED TERMINALS POS. 1	CONNECTED TERMINALS POS. 2	SCHEMATIC
			C&K marking on opposite side		C&K marking on opposite side		
4P	8421	U841	ON	MOM.	1-3,4-6,7-9,10-12	1-2,4-5,7-8,10-11	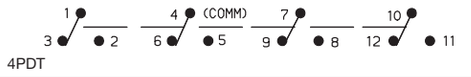
	8425		ON	MOM.			

4PDT

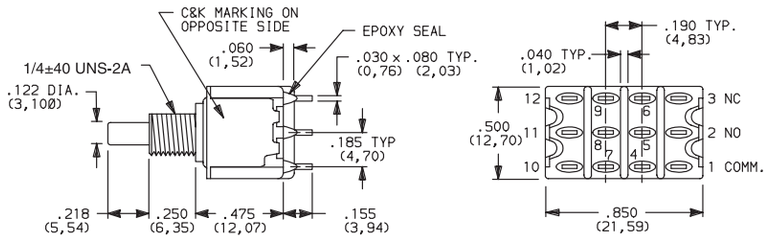

Part number shown: 8421SHZGE

Terminal Nos.
For Reference Only

MOM. = Momentary

* U811 thru U841 model numbers c UL us with all options (except R, R2 terminations) when ordered with G or R contact material.

8X25 models must be ordered with B or P contact material.

8X21 and U8X1 models must be ordered with G or R contact material.

ACTUATOR—SNAP-IN FRONT MOUNT

CAP COLOR
ACTUATOR OR PLUNGER
FRAME COLOR

OPTION CODE	CAP AND FRAME COLOR
2	BLACK
NONE	No Frame Color (J80 option)
1	WHITE
3	RED
4	ORANGE
5	YELLOW
6	GREEN
7	BLUE
9	GRAY

Other colors available, consult Customer Service Center. Cap and Frame Finish: matte.

NOTE: Caps and frames available separately, see pages A-44 and A-45.

J80 SNAP-IN

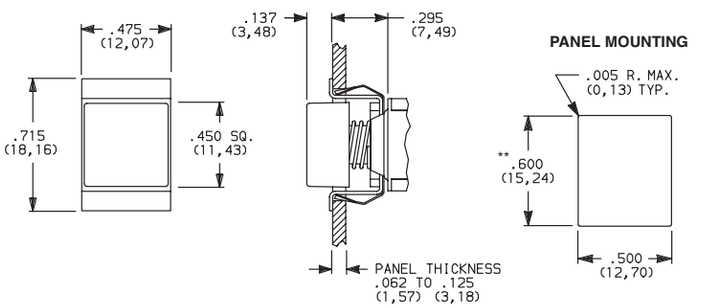

NOTE: No frame color choice required.

** Increase this dim. to .620/.625 (15,75/15,88) for .091/.125 (2,31/3,18) thk. panels.

J81 SNAP-IN WITH FRAME

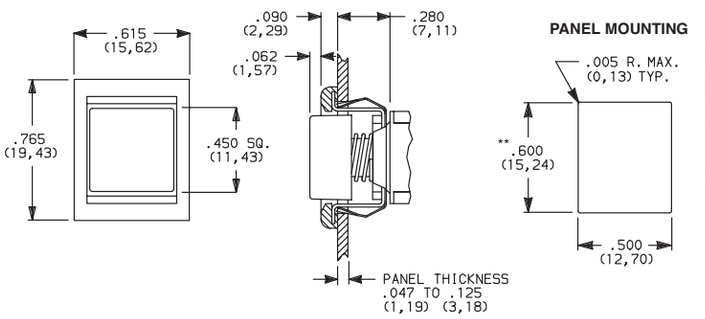

NOTE: Available with C, W-W4, Z or Z3 terminations and SPDT and DPDT models only.

** Increase this dim. to .620/.625 (15,75/15,88) for .091/.125 (2,31/3,18) thk. panels.

Third Angle Projection

Dimensions are shown: Inches (mm)
Specifications and dimensions subject to change

8020 Series
Snap-acting Momentary Pushbutton Switches

ACTUATOR—SNAP-IN FRONT MOUNT

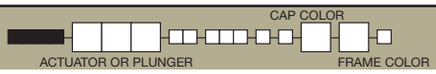

J83 SNAP-IN WITH FRAME AND FLUSH CAP

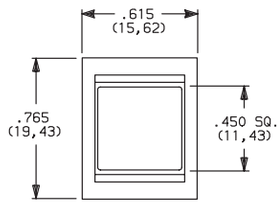

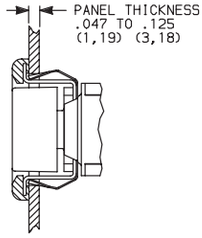

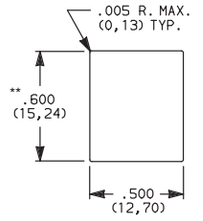

J82 SNAP-IN WITH FRAME FOR LED

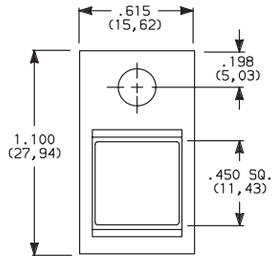

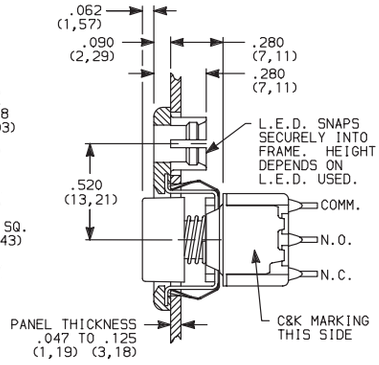

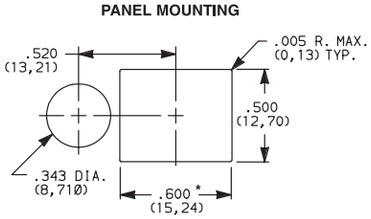

* Increase this dim. to .620/.625 (15,75/15,88) for .091/.125 (2,31/3,18) thk. panels.

LED not included.
For LED information, see page A-45.

J84 SNAP-IN WITH FRAME FOR LED, FLUSH CAP

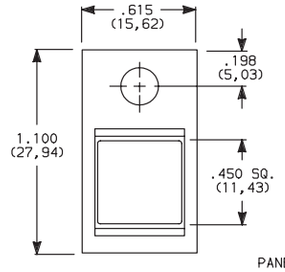

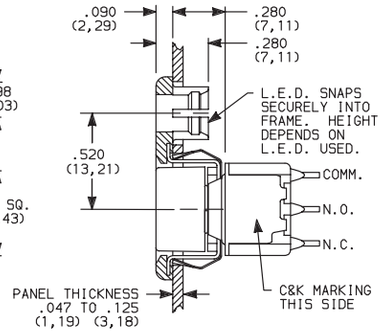

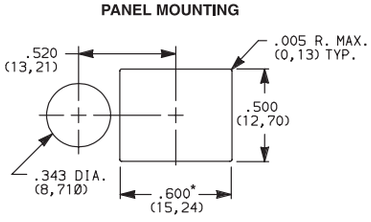

* Increase this dim. to .620/.625 (15,75/15,88) for .091/.125 (2,31/3,18) thk. panels.

LED not included.
For LED information, see page A-45.

OPTION CODE	CAP AND FRAME COLOR
2	BLACK
1	WHITE
3	RED
4	ORANGE
5	YELLOW
6	GREEN
7	BLUE
9	GRAY

Other colors available, consult Customer Service Center.
Cap and Frame Finish: matte.

Available with C, W-W4, Z or Z3 terminations and SPDT and DPDT models only.

NOTE: Caps and frames available separately, see pages A-44 and A-45.

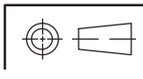
Third Angle Projection

Dimensions are shown: Inches (mm)
Specifications and dimensions subject to change

ACTUATOR—SNAP-IN FRONT MOUNT

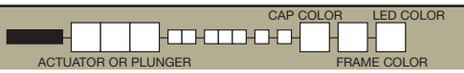

J85 SNAP-IN WITH FRAME AND LED

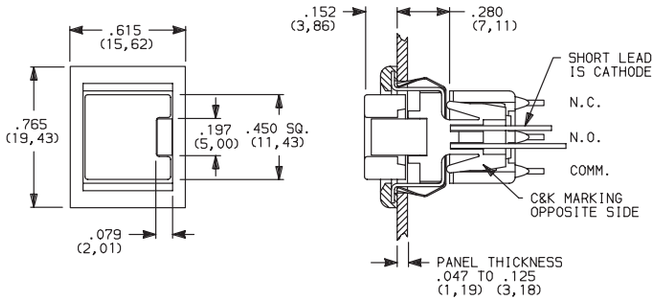

PANEL MOUNTING

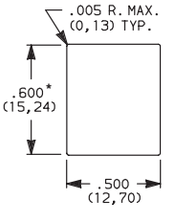

* Increase this dim. to .620/.625 (15,75/15,88) for .091/.125 (2,31/3,18) thk. panels.

8121J85ZGE223
SPST

Available with C, W-W4, Z or Z3 terminations and SPDT models only. For LED information see page A-45.

NOTE: Caps & frames available separately, see pages A-44 and A-45.

OPTION CODE	CAP AND FRAME COLOR
2	BLACK
1	WHITE
3	RED
4	ORANGE
5	YELLOW
6	GREEN
7	BLUE
9	GRAY

OPTION CODE	LED COLOR
3	RED
5	YELLOW
6	GREEN

For LED information see page A-45.

ACTUATOR—PC MOUNT

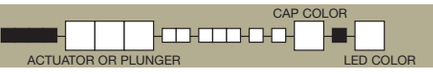

J95 PC WITH V-BRACKET AND LED

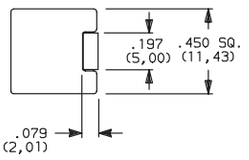

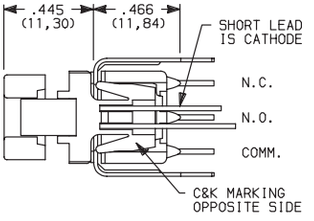

PC MOUNTING

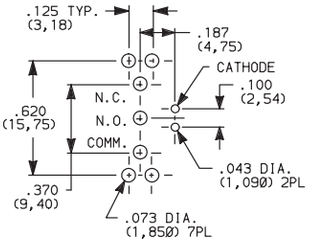

8121J95V3GE23
SPST

OPTION CODE	CAP AND FRAME COLOR
2	BLACK
1	WHITE
3	RED
4	ORANGE
5	YELLOW
6	GREEN
7	BLUE
9	GRAY

OPTION CODE	LED COLOR
3	RED
5	YELLOW
6	GREEN

For LED information see page A-45.

NOTE: Caps available separately, see page A-44.
Available with V3 terminations and SPDT models only.

Third Angle Projection

Dimensions are shown: Inches (mm)
Specifications and dimensions subject to change

8020 Series
Snap-acting Momentary Pushbutton Switches

PLUNGER

ACTUATOR OR PLUNGER

S PLUNGER

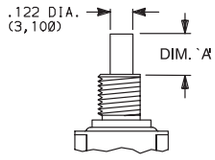

AVAILABLE BUSHINGS	DIM. 'A' FOR C, W-W4, Z & Z3 TERMINATIONS	DIM. 'A' FOR A, A2, A3, A4, A6, AV-A3, R & R2 TERMINATIONS	DIM. 'A' FOR V3-V61 TERMINATIONS
D, D9	.244 (6,20)	.228 (5,79)	.224 (5,69)
H, H9	.218 (5,54)	.202 (5,13)	.198 (5,03)
Y, Y9	.203 (5,16)	.187 (4,75)	.183 (4,65)
Y3	(5,54)	(5,13)	(5,03)
Y4	.185 (4,70)	.169 (4,29)	.165 (4,19)
D2, D8	N/A	.232 (5,89)	.228 (5,79)
D3	N/A	.162 (4,11)	.158 (4,01)

NONE NO PLUNGER CHOICE REQUIRED (JXX ACTUATORS)

L PLUNGER

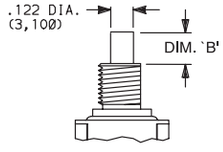

AVAILABLE BUSHINGS	DIM. 'B' FOR C, W-W4, Z & Z3 TERMINATIONS	DIM. 'B' FOR A, A2, A3, A4, A6, AV-A3, R & R2 TERMINATIONS	DIM. 'B' FOR V3-V61 TERMINATIONS
Y, Y9	.178 (4,52)	.162 (4,11)	.158 (4,01)
Y4	.090 (2,29)	.074 (1,88)	.070 (1,78)

M SNAP-FITTING PLUNGER

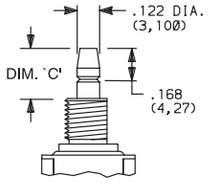

AVAILABLE BUSHINGS	DIM. 'C' FOR C, W-W4, Z & Z3 TERMINATIONS	DIM. 'C' FOR A, A2, A3, A4, A6, AV-A3, R & R2 TERMINATIONS	DIM. 'C' FOR V3-V61 TERMINATIONS
D, D9	.297 (7,54)	.281 (7,14)	.277 (7,04)
H, H9	.267 (6,78)	.251 (6,38)	.247 (6,27)
Y, Y9	.259 (6,58)	.243 (6,17)	.239 (6,07)
Y3	(6,78)	(6,37)	(6,27)
Y4	.259 (6,58)	.243 (6,17)	.239 (6,07)
D2, D8	N/A	.273 (6,93)	.269 (6,83)
D3	N/A	.361 (9,17)	.357 (9,07)

N/A = NOT AVAILABLE

NOTE: When selecting plunger option, bushing selection must also be made, see next page. No plunger option is required when any JXX actuator option is selected. Additional plunger lengths are available on SPDT and DPDT models, consult Customer Service Center. Not all plunger lengths sufficient for use with caps, see page A-44.

BUSHING

NONE NO BUSHING CHOICE REQUIRED (JXX ACTUATORS)

D .280" HIGH THREADED, KEYWAY

D9 .280" HIGH UNTHREADED, KEYWAY

H .250" HIGH THREADED, FLAT

H9 .250" HIGH UNTHREADED, FLAT

Y .350" HIGH THREADED, KEYWAY

Y9 .350" HIGH UNTHREADED, KEYWAY

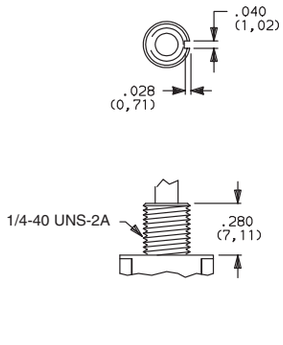

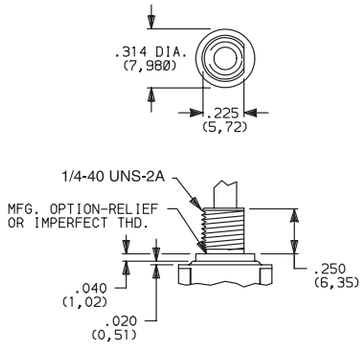

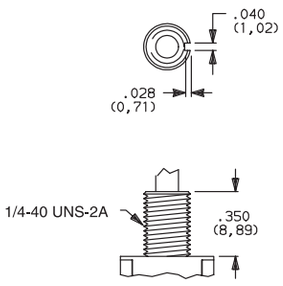

D9 bushing standard with A-A6, R, R2 AV-AV3 terminations.

H bushing standard with C, W-W4, Z or Z3 terminations. H, H9 bushings not available on single pole models with A3-A6, R, R2 terminations.

Will withstand 12 in./lbs. of torque with no distortion.

Third Angle Projection

Dimensions are shown: Inches (mm)
Specifications and dimensions subject to change

BUSHING

Y3 6.35mm THREADED, KEYWAY

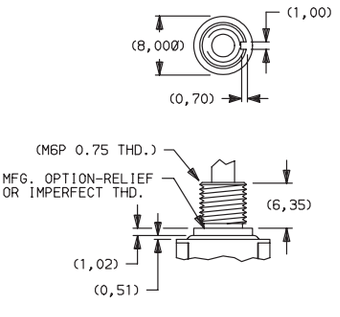

Y4 .378" HIGH THREADED, FLAT

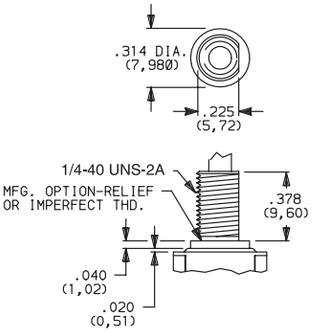

Y3 & Y4 bushings not available on single pole models with A3-A6, R, R2 terminations. Will withstand 12 in./lbs. of torque with no distortion.

D2 .288" HIGH THREADED, FLAT
D8 .288" HIGH UNTHREADED, FLAT

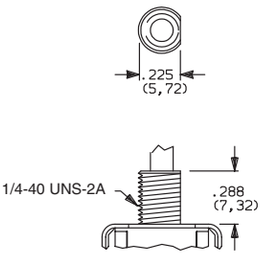

D2, D8 bushings not available with C, W-W4, Z, Z3 terminations.

D3 .180" HIGH UNTHREADED

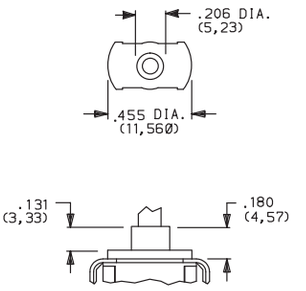

D3 bushing available with A, A2, A3, AV, AV2, AV3 and V2-V61 terminations only.

NOTE: No bushing option choice required when JXX actuator option is selected. When selecting bushing option, plunger selection must also be made, see previous page. Plunger lengths vary with bushing and termination options selected.

PANEL MOUNTING

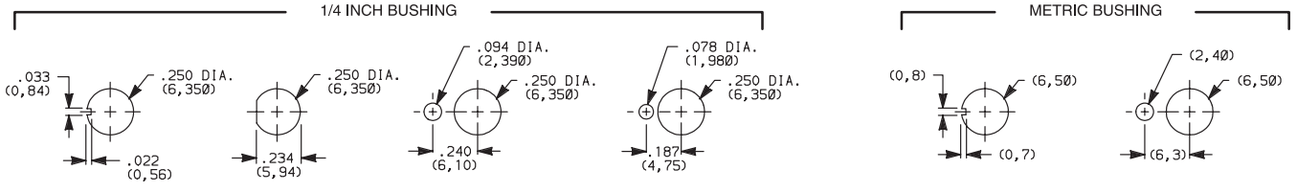

Without locking ring | With standard locking ring | With small locking ring | Without locking ring | With locking ring

NOTE: Two mounting nuts, locking ring and lockwasher supplied standard with threaded bushings.
Optional mounting nut and locking ring styles available, see section "Technical Data and Additional Hardware".

TERMINATIONS

Z SOLDER LUG

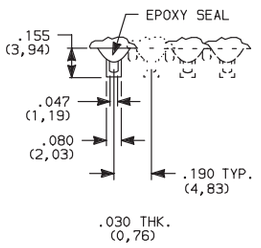

SPDT thru 4PDT

Not available with J95 actuator, P or R contact material.

C PC THRU-HOLE

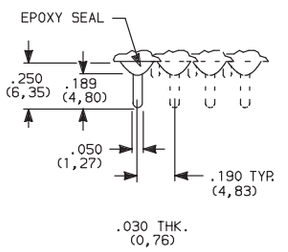

PC MOUNTING

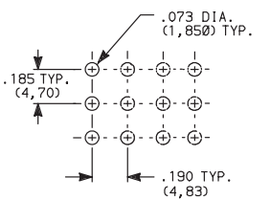

SPDT thru 4PDT

Not available with J95 actuator option.

Z3 QUICK CONNECT

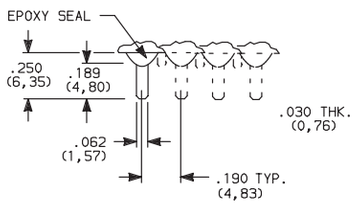

SPDT thru 4PDT

Not available with J95 actuator, P or R contact material. Mating quick connector available, order part number 530100000, page A-44.

W W1, W3, W4 WIRE WRAP

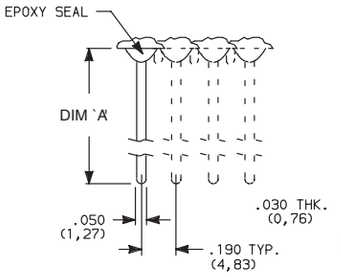

OPTION CODE	DIM 'A'
W	.750 (19,05)
W1	.964 (24,49)
W3	.425 (10,80)
W4	1.062 (26,97)

Not available with J95 actuator option.

SPDT thru 4PDT

Third Angle Projection

Dimensions are shown: Inches (mm)
Specifications and dimensions subject to change

8020 Series
Snap-acting Momentary Pushbutton Switches

TERMINATIONS

A RIGHT ANGLE, PC THRU-HOLE

8121SD9AGE
SPDT

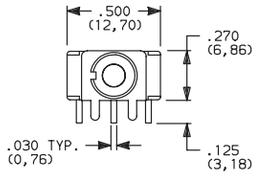

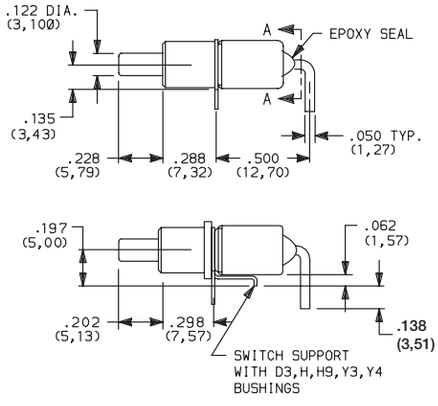

Part Number 8121SH9AGE

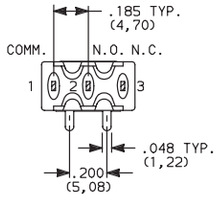

SECTION A-A

Terminal Nos.
For Reference Only.

A3 RIGHT ANGLE, SNAP-IN, PC THRU-HOLE

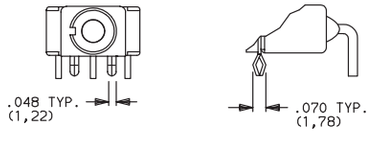

PC MOUNTING

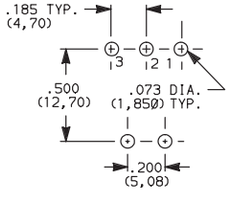

Not available with JXX actuators and I seal.
Terminal bend radii and lead-in manufacturing option.

A RIGHT ANGLE, PC THRU-HOLE

8221SD9AGE
DPDT

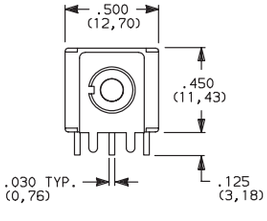

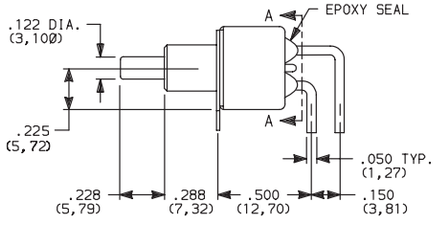

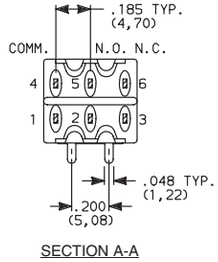

SECTION A-A

A3 RIGHT ANGLE, SNAP-IN, PC THRU-HOLE

PC MOUNTING

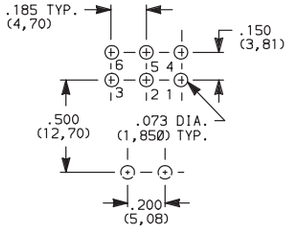

Not available with JXX actuators and I seal option.
Terminal bend radii and lead-in manufacturing option.

Third Angle Projection

Dimensions are shown: Inches (mm)
Specifications and dimensions subject to change

TERMINATIONS

A RIGHT ANGLE, PC THRU-HOLE

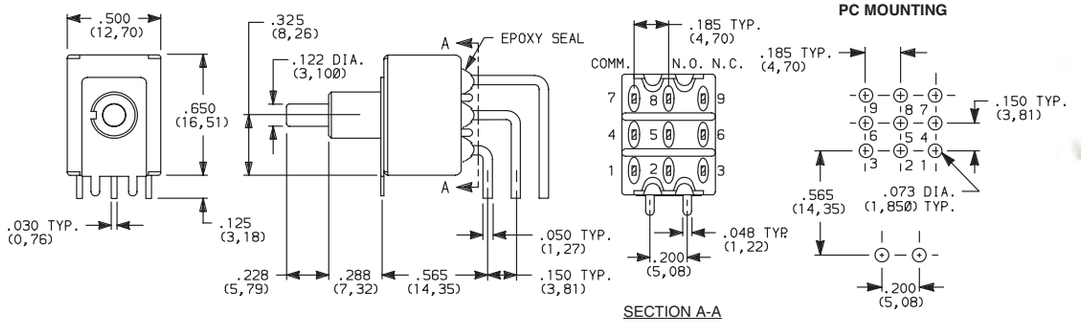

8321SD9AGE
3PDT

Not available with JXX actuators and I seal option.
Terminal bend radii and lead-in manufacturing option.

A2 RIGHT ANGLE, PC THRU-HOLE

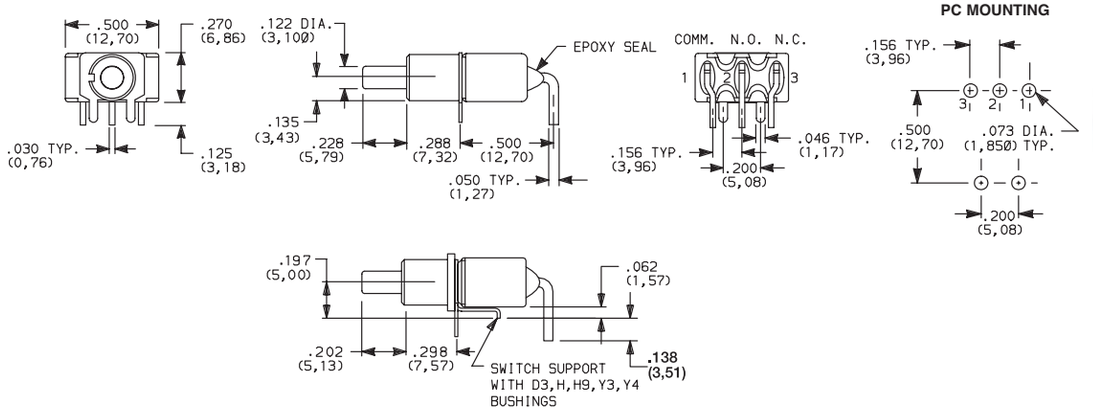

Part Number 8121SH9A2GE

8121SD9A2GE
SPDT

Not available with JXX actuators, I seal option.
Terminal bend radii and lead-in manufacturing option.

A4 RIGHT ANGLE, PC THRU-HOLE, REVERSED TERMINALS

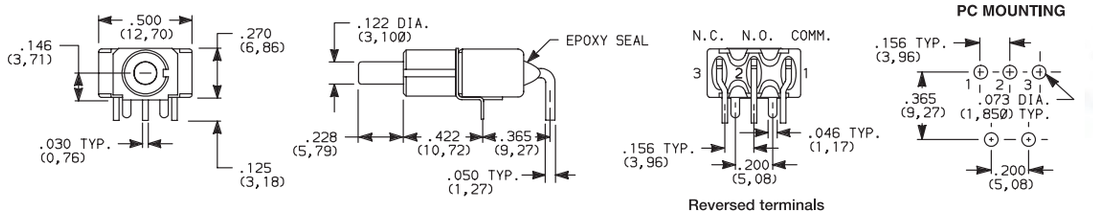

8121SD9A4GE
SPDT

Not available with JXX actuators, D3, H, H9, Y3, Y4 bushings and I seal.
Terminal bend radii and lead-in manufacturing option.

The A4 and R2 termination options are functionally identical and fit the same PC mounting pattern. The switches, however, are shifted relative to the mounting holes. The PC pattern must clear the switch support legs. Unlike the R2, the A4 option is available with UL/CSA.

Third Angle Projection

Dimensions are shown: Inches (mm)
Specifications and dimensions subject to change

8020 Series
Snap-acting Momentary Pushbutton Switches

TERMINATIONS

A6 RIGHT ANGLE, PC THRU-HOLE

8121SD9A6GE
SPDT

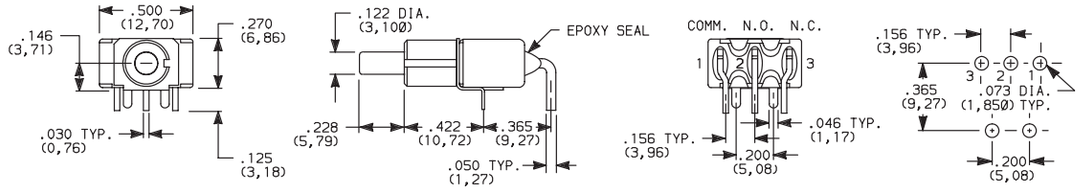

The A6 and R termination options are functionally identical and fit the same PC mounting pattern, The switches, however, are shifted relative to the mounting holes. The PC pattern must clear the switch support legs. Unlike the R, the A6 option is available with UL/CSA.

Not available with JXX actuators, D3, H, H9, Y3, Y4 bushings and I seal.
Terminal bend radii and lead-in manufacturing option.

R RIGHT ANGLE WITH PCB

8121SD9RGE
SPDT

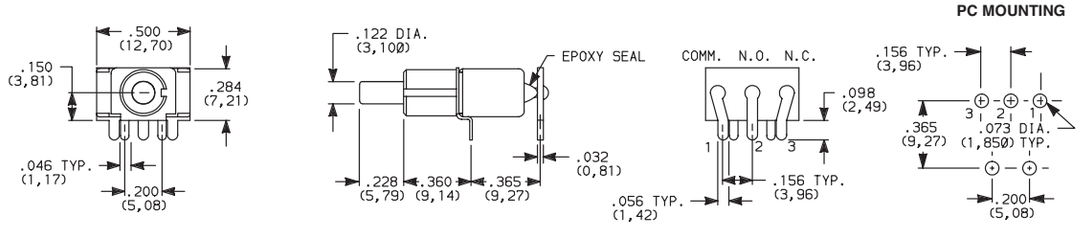

Not available with JXX actuators, D3, H, H9, Y3, Y4 bushings, I seal option.
R termination not UL/CSA approved.

R2 RIGHT ANGLE WITH PCB, REVERSED TERMINALS

8121SD9R2GE
SPDT

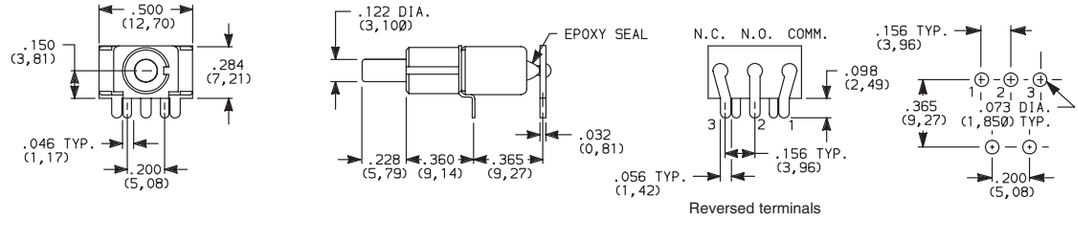

Not available with JXX actuators, D3, H, H9, Y3, Y4 bushings, I seal option.
R2 termination not UL/CSA approved.

Third Angle Projection

Dimensions are shown: Inches (mm)
Specifications and dimensions subject to change

TERMINATIONS

AV2 VERTICAL RIGHT ANGLE, PC THRU-HOLE, .150" PITCH

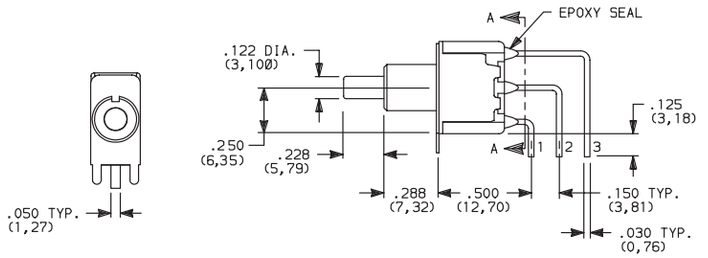

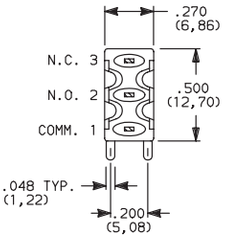

SECTION A-A

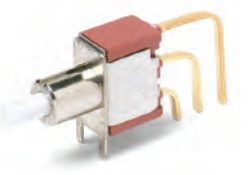

8121SD9AV2GE
SPDT

AV3 VERTICAL RIGHT ANGLE, SNAP-IN,, PC THRU-HOLE, .150" PITCH

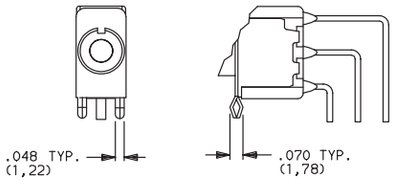

AV1 VERTICAL RIGHT ANGLE, EXTENDED, PC THRU-HOLE, .150" PITCH

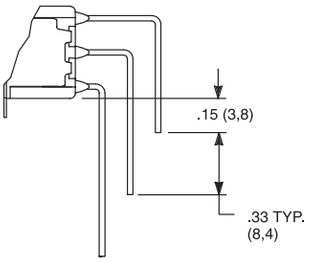

PC MOUNTING

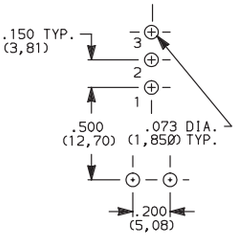

Not available with JXX actuators and I seal.
Terminal bend radii and lead-in manufacturing option.

AV2 VERTICAL RIGHT ANGLE, PC THRU-HOLE, .150" PITCH

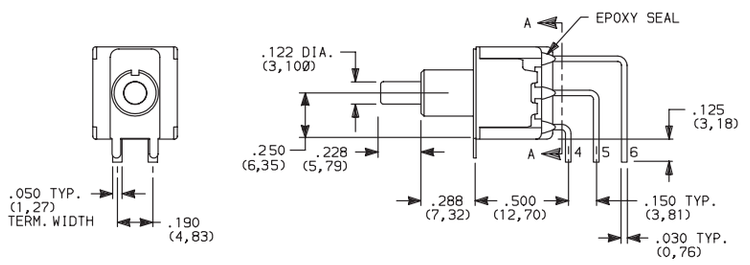

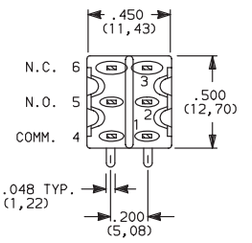

SECTION A-A

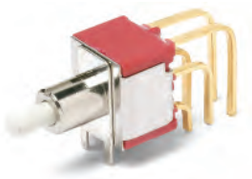

8221SD9AV2GE
DPDT

AV3 VERTICAL RIGHT ANGLE, SNAP-IN, PC THRU-HOLE, .150" PITCH

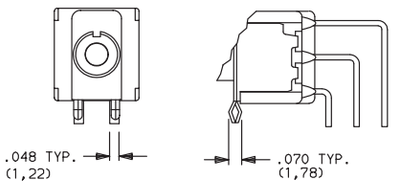

AV1 VERTICAL RIGHT ANGLE, EXTENDED, PC THRU-HOLE, .150" PITCH

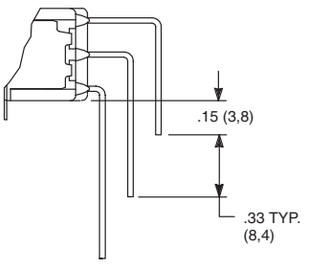

PC MOUNTING

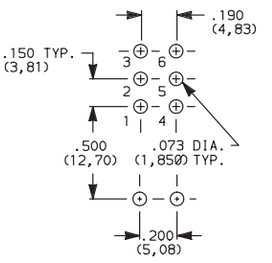

Not available with JXX actuators and I seal.
Terminal bend radii and lead-in manufacturing option.

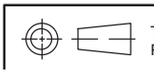

Third Angle Projection

Dimensions are shown: Inches (mm)
Specifications and dimensions subject to change

8020 Series
Snap-acting Momentary Pushbutton Switches

TERMINATIONS

AV2 VERTICAL RIGHT ANGLE, PC THRU-HOLE, 150" PITCH

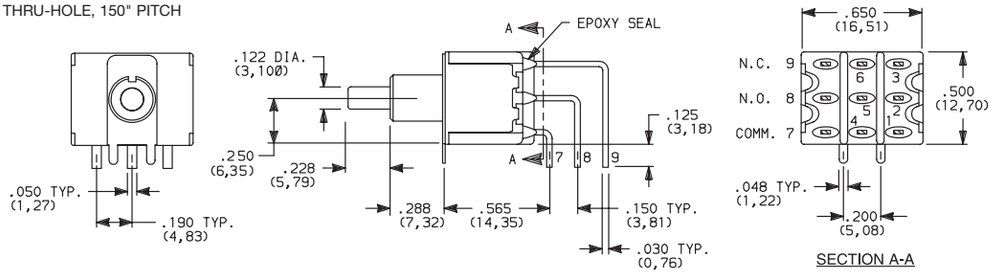

8321SD9AV2GE
3PDT

AV1 VERTICAL RIGHT ANGLE, EXTENDED, PC THRU-HOLE, .150" PITCH

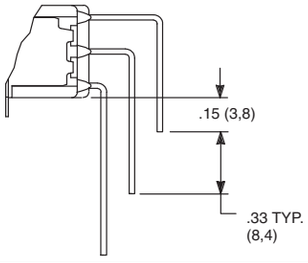

AV3 VERTICAL RIGHT ANGLE, SNAP-IN, PC THRU-HOLE, .150" PITCH

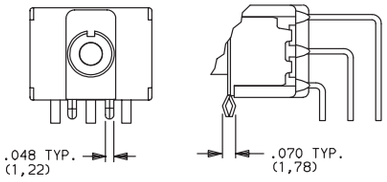

Not available with JXX actuators and I seal.
Terminal bend radii and lead-in manufacturing option.

PC MOUNTING

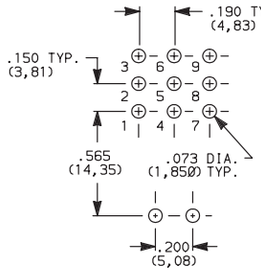

AV2 VERTICAL RIGHT ANGLE, PC THRU-HOLE, 150" PITCH

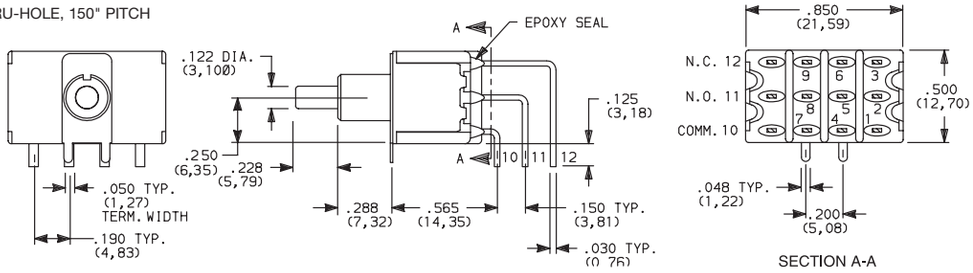

8421SD9AV2GE
4PDT

AV1 VERTICAL RIGHT ANGLE, EXTENDED, PC THRU-HOLE, .150" PITCH

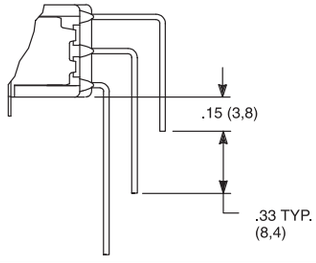

AV3 VERTICAL RIGHT ANGLE, SNAP-IN, PC THRU-HOLE, .150" PITCH

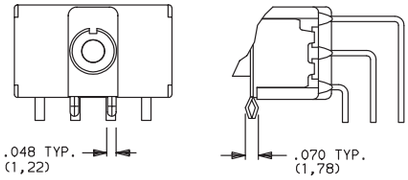

Not available with JXX actuators and I seal.
Terminal bend radii and lead-in manufacturing option.

PC MOUNTING

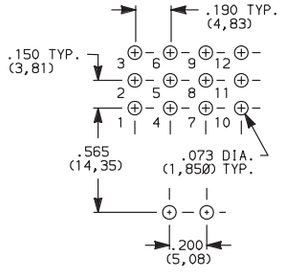

V2, V6, V7, V8 VERTICAL MOUNT, V-BRACKET

V61 VERTICAL MOUNT, V-BRACKET, SNAP-IN

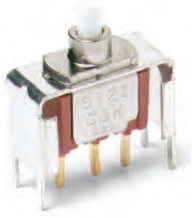

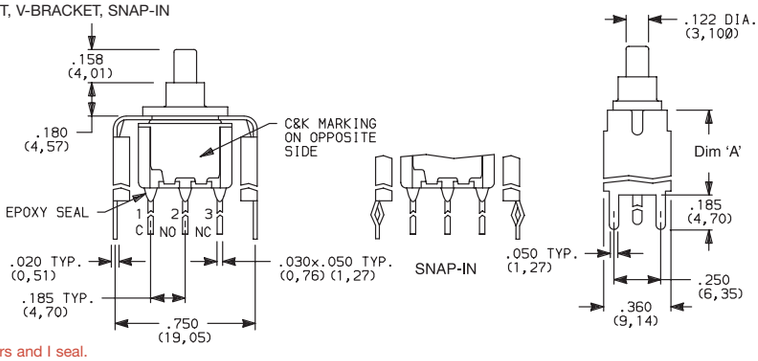

8121SD3__GE
SPDT

Not available with JXX actuators and I seal.

PC MOUNTING

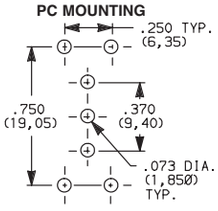

OPTION CODE	DIM 'A'
V2	.555 (14,10)
V6, V61	.460 (11,68)
V7	.630 (16,00)
V8	.953 (24,21)

Third Angle Projection

Dimensions are shown: Inches (mm)
Specifications and dimensions subject to change

TERMINATIONS

V2, V6, V7, V8 VERTICAL MOUNT, V-BRACKET
V61 VERTICAL MOUNT, V-BRACKET, SNAP-IN

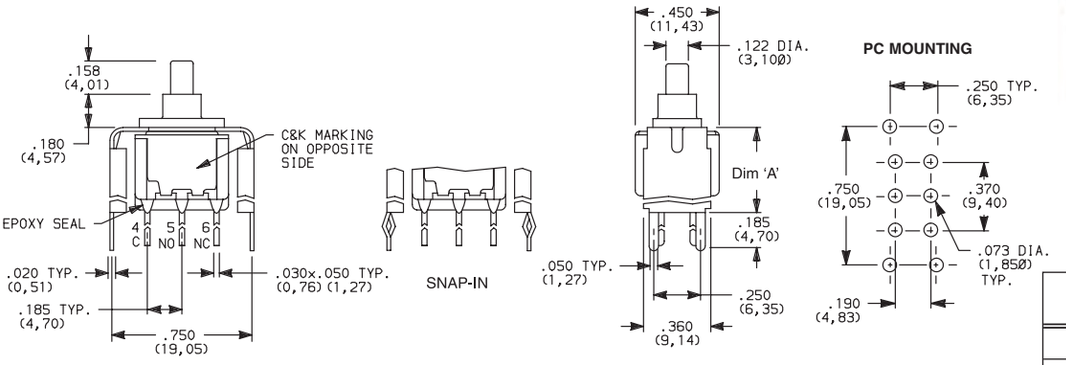

8221SD3__GE
DPDT

OPTION CODE	DIM 'A'
V2	.555 (14,10)
V6, V61	.460 (11,68)
V7	.630 (16,00)
V8	.953 (24,21)

Not available with JXX actuators and I seal.

V2, V7, V8 VERTICAL MOUNT, V-BRACKET

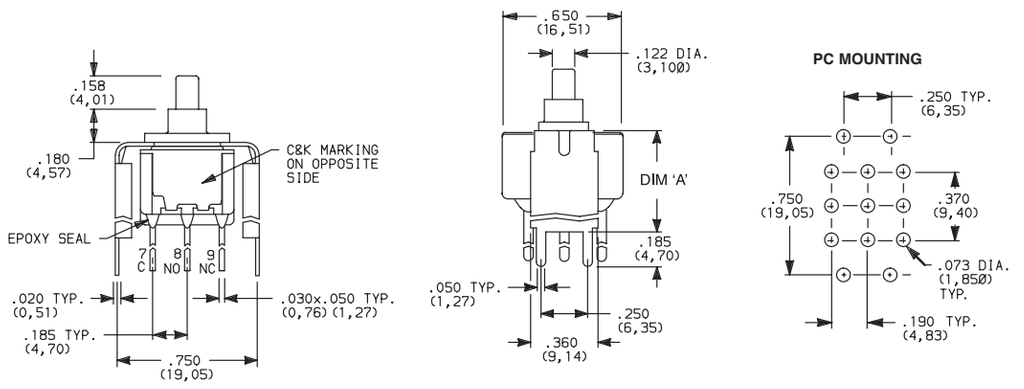

8321SD3__GE
3PDT

OPTION CODE	DIM 'A'
V2	.555 (14,10)
V7	.630 (16,00)
V8	.953 (24,21)

Not available with JXX actuators and I seal.

V2, V7, V8 VERTICAL MOUNT, V-BRACKET

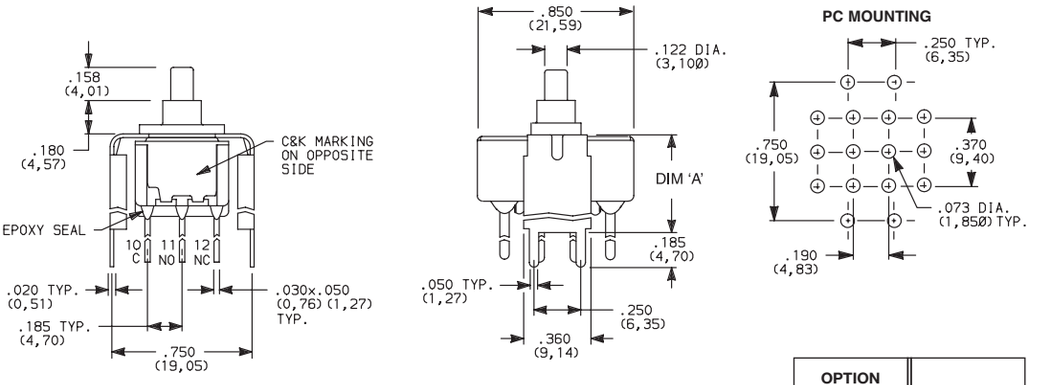

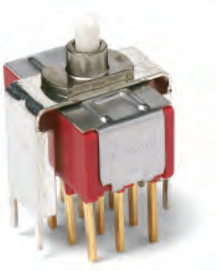

8421SD3__GE
4PDT

OPTION CODE	DIM 'A'
V2	.555 (14,10)
V7	.630 (16,00)
V8	.953 (24,21)

Not available with JXX actuators and I seal.

Third Angle Projection

Dimensions are shown: Inches (mm)
Specifications and dimensions subject to change

8020 Series
Snap-acting Momentary Pushbutton Switches

TERMINATIONS

V3, V4, V9 VERTICAL MOUNT, V-BRACKET

V31 VERTICAL MOUNT, V-BRACKET, SNAP-IN

8121SD3__GE
SPDT

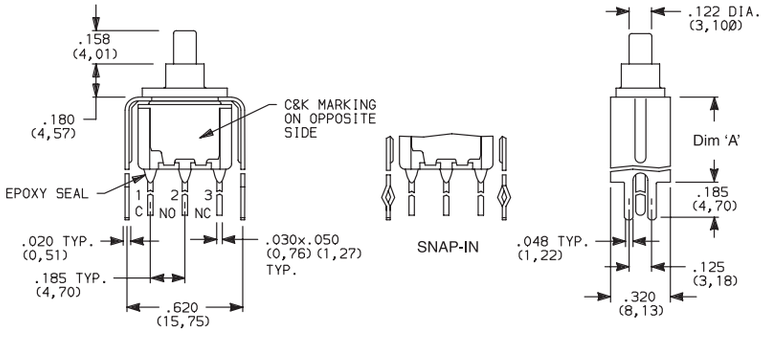

PC MOUNTING

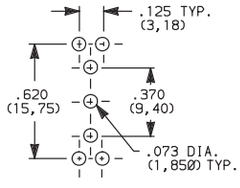

OPTION CODE	DIM 'A'
V3, V31	.460 (11,68)
V4	.630 (16,00)
V9	1.150 (29,21)

Not available with J8X actuators and I seal.

V3, V4, V9 VERTICAL MOUNT, V-BRACKET

V31 VERTICAL MOUNT, V-BRACKET, SNAP-IN

8221SD3__GE
DPDT

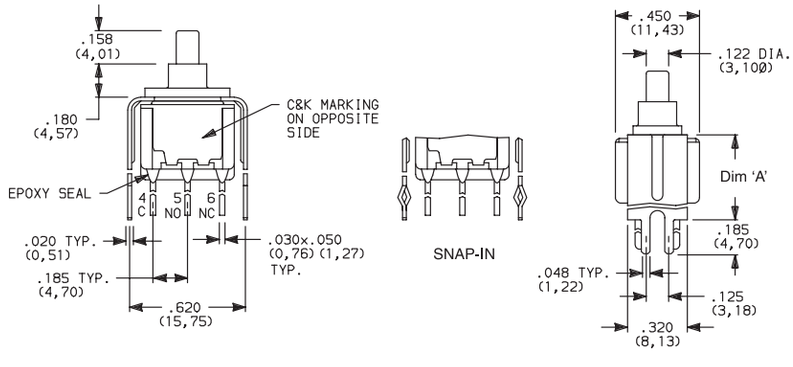

PC MOUNTING

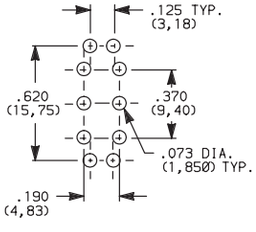

OPTION CODE	DIM 'A'
V3, V31	.460 (11,68)
V4	.630 (16,00)
V9	1.150 (29,21)

Not available with J8X actuators and I seal.

V4, V9 VERTICAL MOUNT, V-BRACKET

8321SD3V4GE
3PDT

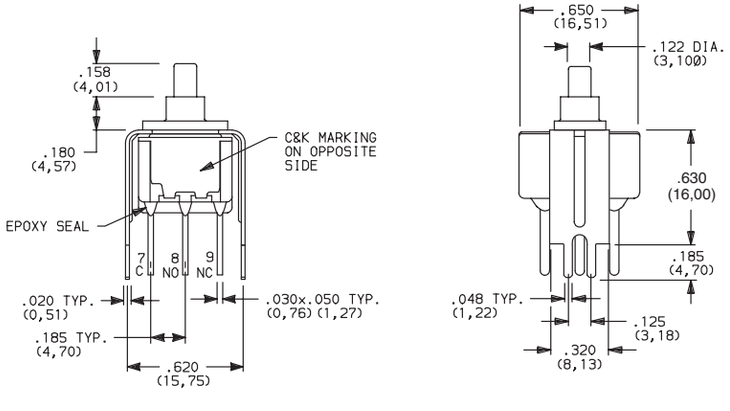

PC MOUNTING

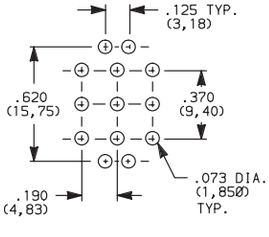

OPTION CODE	DIM 'A'
V4	.630 (16,00)
V9	1.150 (29,21)

Not available with JXX actuators and I seal.

Third Angle Projection

Dimensions are shown: Inches (mm)
Specifications and dimensions subject to change

TERMINATIONS

V4, V9 VERTICAL MOUNT, V-BRACKET

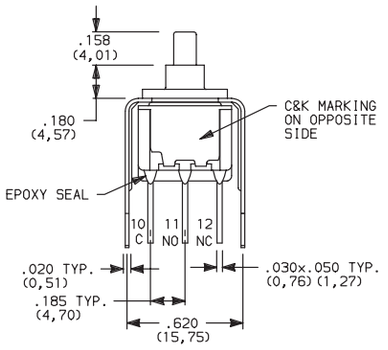

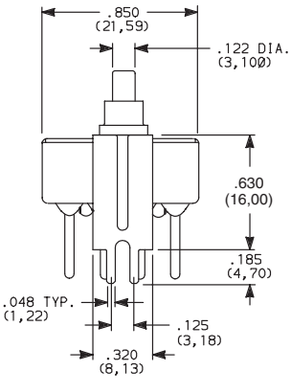

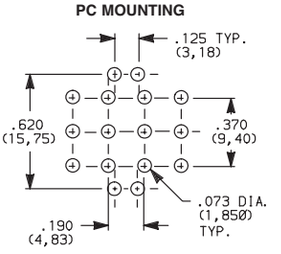

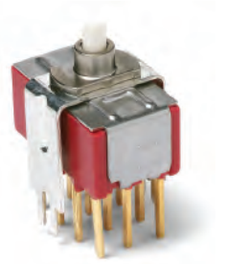

8421SD3V4GE
4PDT

OPTION CODE	DIM 'A'
V4	.630 (16,00)
V9	1.150 (29,21)

Not available with JXX actuators and I seal.

CONTACT MATERIAL

OPTION CODE	CONTACT MATERIAL	TERMINAL PLATING	RATINGS	
B	GOLD [1]	GOLD [1]	LOW LEVEL/DRY CIRCUIT	8x25 MODELS ONLY: 0.4 MAX. @ 20 V AC OR DC MAX.
P		MATTE-TIN [4]		
G	GOLD OVER SILVER [2,3]	GOLD [3]	LOW LEVEL/DRY CIRCUIT OR POWER	8X21, U8X1 MODELS ONLY: 0.4 VA MAX @ 20 V AC OR DC MAX. OR 1 AMP @ 120 V AC OR 28 V DC.
R		MATTE-TIN [4]		

* Note: See Technical Data section of this catalog for RoHS compliant and compatible definitions and specifications.

[1] ALL CONTACTS & TERMINALS: Copper alloy, with gold plate over nickel plate.
[2] N.O. AND N.C. CONTACTS: Coin silver, with gold plate over nickel plate.
[3] COMMON CONTACTS & ALL TERMINALS: Copper alloy, with gold plate over nickel plate.
[4] TERMINALS: Copper alloy, with matte-tin over nickel plate.

NOTE: Any models supplied with B, P, R or G contact material are RoHS compliant.

U811-U841 models with all options (except R, R2 terminations) when ordered with mandatory G or R contact material.

B or P contact material must be ordered with 8X25 models.

G or R contact material must be ordered with 8X21, U8X1 models.

P or R contact material not available with Z, Z3 terminations.

SEAL

E EPOXY SEAL

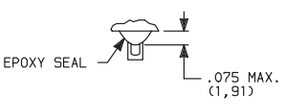

I EPOXY POTTED BASE

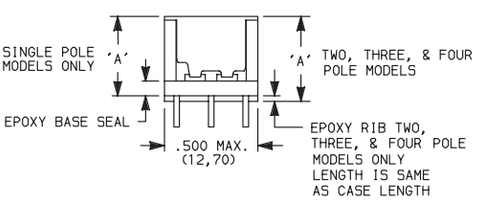

NO. POLES	DIM 'A'
SP	.410 (10,41)
DP	.440 (11,18)
3P	.505 (12,83)
4P	.505 (12,83)

NOTE: Available with C, W-W4, Z, Z3 terminations only.

Third Angle Projection

Dimensions are shown: Inches (mm)
Specifications and dimensions subject to change

8020 Series
Snap-acting Momentary Pushbutton Switches

AVAILABLE HARDWARE

Cap

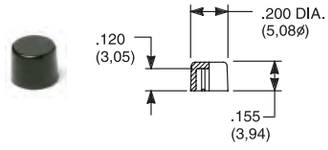

PART NO.

708901000	WHITE
708902000	BLACK
708903000	RED
708904000	ORANGE
708905000	YELLOW
708906000	GREEN
708907000	BLUE
708909000	GRAY

Material: Nylon
Finish: Gloss

Cap

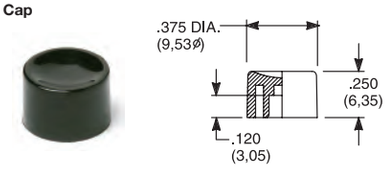

PART NO.

752701000	WHITE
752702000	BLACK
752703000	RED
752704000	ORANGE
752705000	YELLOW
752706000	GREEN
752707000	BLUE
752709000	GRAY

Material: Nylon
Finish: Gloss

Cap

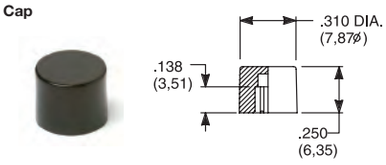

PART NO.

801801000	WHITE
801802000	BLACK
801803000	RED
801804000	ORANGE
801805000	YELLOW
801806000	GREEN
801807000	BLUE
801809000	GRAY

Material: Nylon
Finish: Gloss

Cap, Snap-fitting plunger

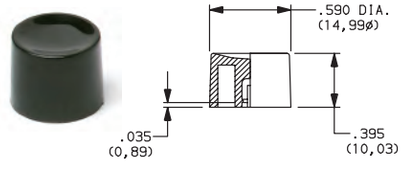

PART NO.

452D01000	WHITE
452D02000	BLACK
452D03000	RED
452D04000	ORANGE
452D05000	YELLOW
452D06000	GREEN
452D07000	BLUE
452D09000	GRAY

Material: Nylon
Finish: Gloss

Cap, Snap-fitting plunger

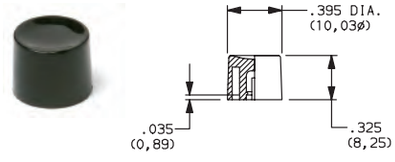

PART NO.

894101000	WHITE
894102000	BLACK
894103000	RED
894104000	ORANGE
894105000	YELLOW
894106000	GREEN
894107000	BLUE
894109000	GRAY

Material: Nylon
Finish: Gloss

Cap, J80, J81, J82, J83 & J84 options only

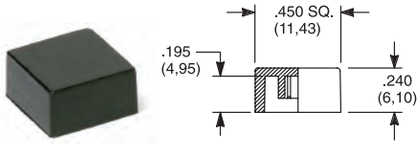

PART NO.

484601000	WHITE
484602000	BLACK
484603000	RED
484604000	ORANGE
484605000	YELLOW
484606000	GREEN
484607000	BLUE
484609000	GRAY

Material: Nylon
Finish: Gloss

PART NO.

798201000	WHITE
798202263	BLACK
798203000	RED
798204000	ORANGE
798205000	YELLOW
798206000	GREEN
798207000	BLUE
798209000	GRAY

Material: Nylon
Finish: Matte

Frame

PART NO.

615602263 BLACK

Material: Nylon
Finish: Matte

Frame

PART NO.

613302263 BLACK

Material: Nylon
Finish: Matte

Cap, J85 & J95 options only

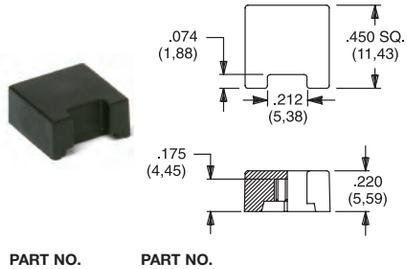

PART NO.

459701000	WHITE
459702000	BLACK
459703000	RED
459704000	ORANGE
459705000	YELLOW
459706000	GREEN
459707000	BLUE
459709000	GRAY

Material: Nylon
Finish: Gloss

PART NO.

476801000	WHITE
476802000	BLACK
476803000	RED
476804000	ORANGE
476805000	YELLOW
476806000	GREEN
476807000	BLUE
476809000	GRAY

Material: Nylon
Finish: Matte

Fits Z3 Termination female connector

PART NO.

530100000

Available in loose pieces.

NOTE: Additional nuts, locking rings and lockwashers available separately, see section "Technical Data and Additional Hardware".
Other cap & frame colors available, consult Customer Service Center.

Third Angle Projection

Dimensions are shown: Inches (mm)
Specifications and dimensions subject to change

AVAILABLE HARDWARE

Frames snap into panel opening and are independent from switch mounting. Accurate positioning of the PC mounted switch relative to the panel opening is necessary to provide proper clearance between actuator and frame. Available in two basic styles and four panel thicknesses .047-.125 in. Material: Nylon. Finish: Matte.

TYPICAL APPLICATION

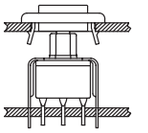

.047" (1,19) PANEL THK.	.062" (1,57) PANEL THK.	.090" (2,29) PANEL THK.	.125" (3,18) PANEL THK.
PART NO.	**PART NO.**	**PART NO.**	**PART NO.**
432502263	432602263	432702263	432802263 BLACK

PANEL MOUNTING

For part numbers
4325xxxxx, 4326xxxxx

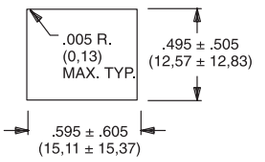

For part numbers
4327xxxxx, 4328xxxxx

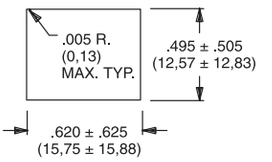

Panel Inserts

Above frames (part nos. 432XXXXXX) are also available with insert which accepts LED for indicator light assembly. Order insert separately from frame. Blank insert panel (without hole for LED) also available. **LED not included.**

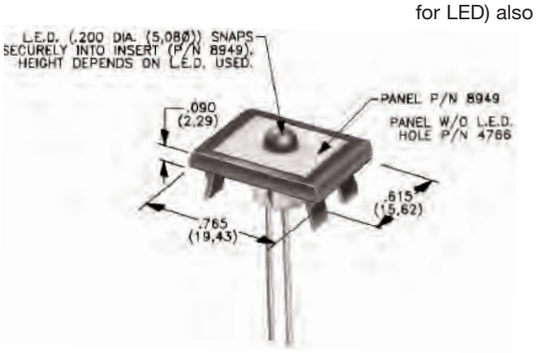

PANEL INSERT WITH HOLE FOR LED	BLANK PANEL INSERT WITHOUT HOLE FOR LED
PART NO.	**PART NO.**
894902000	476602000 BLACK

Special colors, custom markings available, consult Customer Service Center.

LED INFORMATION

SWITCHES WITH LED SUPPLIED: J85, J95 OPTIONS:
Rectangular LEDs are supplied on 8020 Series pushbutton switches with J85 and J95 options. These LEDs are factory installed and are not replaceable. The following specifications apply:

OPTION CODE	COLOR	TYP. INTENSITY	TYP. FORWARD VOLTAGE	TYP. FORWARD CURRENT	MAX RATINGS AT 25ºC AMBIENT TEMPERATURE		
					FORWARD VOLTAGE	CONTINUOUS FORWARD CURRENT	POWER DISSIPATION
6	Green	1.0 mcd	2.1 V	20 mA	2.5 V	50 mA	125 mW
3	Red*	0.5 mcd		10 mA		30 mA	75 mW
5	Yellow	4.0 mcd		20 mA		50 mA	125 mW

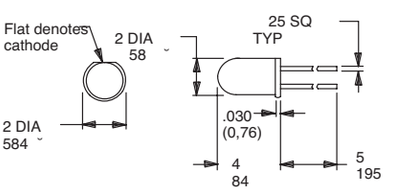

Suggested LED for J82 & J84 options
Dimensions for reference only

Process Information: Soldering to LED leads must be completed within 5 seconds at 500ºF (260ºC) maximum.
Caution: Circuit elements must limit forward current of LED to 50mA max. continuous.
* Extra-bright red LED available (typ. intensity 4.5 mcd), consult Customer Service Center.
LEDs are not supplied with J82, J84 options. LED snaps into switch frame surrounding actuator and is wired externally.

Third Angle Projection

Dimensions are shown: Inches (mm)
Specifications and dimensions subject to change

E010 Series
Sealed Momentary Pushbutton Switches

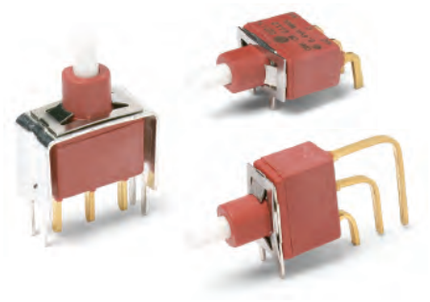

Features/Benefits

- *Process sealed, withstands soldering and cleaning*
- *Long life contact design*
- *Snap-fitting plunger available, accepts a variety of caps*
- *RoHS compliant models available*

Typical Applications

- *Instrumentation*
- *Telecommunications and networking equipment*
- *Computers and peripherals*

Models Available

Specifications

CONTACT RATING: Q contact material: 4 AMPS @ 125 V AC or 28 V DC. See page A-50 for additional ratings.

ELECTRICAL LIFE: 40,000 make-and-break cycles at full load.

CONTACT RESISTANCE: Below 20 mΩ typ. initial @ 2–4 V DC, 100 mA, for both silver and gold plated contacts.

INSULATION RESISTANCE: 10^9Ω min.

DIELECTRIC STRENGTH: 1000 Vrms min. @ sea level.

OPERATING TEMPERATURE: -30°C to 75°C.

CAP INSTALLATION FORCE: 10 lbs. max. permissible.

SOLDERABILITY: Per MIL-STD-202F method 208D, or EIA RS-186E method 9 (1 hour steam aging).

NOTE: Any models supplied with P, Q, B or G contact material are RoHS compliant.

NOTE: Specifications and materials listed above are for switches with standard options. For information on specific and custom switches, consult Customer Service Center.

Materials

CASE & BUSHING: Glass filled nylon 6/6, flame retardant (UL 94V-0).

PLUNGER: Glass filled nylon or glass filled polyester (PBT) (UL 94V-0), with internal o-ring seal standard.

SWITCH SUPPORT: Brass or steel, matte-tin plated.

SWITCH SUPPORT RETAINER: Stainless steel.

END CONTACTS: Q contact material: Coin silver, silver plated. See A-50 for additional ratings.

CENTER CONTACTS & ALL TERMINALS: Q contact material: Copper alloy, silver plated. See page A-50 for additional ratings.

TERMINAL SEAL: Epoxy.

HARDWARE: Nut & locking ring-Brass, nickel plated. Lockwasher-Steel, nickel plated.

Build-A-Switch

To order, simply select desired option from each category and place in the appropriate box. Available options are shown and described on pages A-47 thru A-51. For additional options not shown in catalog, consult Customer Service Center. All models are process sealed to withstand machine soldering temperatures and pressure wash cleaning methods.

Switch Function
E112 SPDT On-Mom.

Plunger
S .222" high
L .338" high
M .331" high, snap-fitting

Bushing
D1 Unthreaded
Y Threaded, keyway

Terminations
A Right angle, PC thru-hole
AV2 Vertical right angle, PC thru-hole
C PC Thru-hole
A3 Right angle, snap-in, PC thru-hole
AV3 Vertical right angle, snap-in, PC thru-hole
R2 Right angle with PCB
V3 .460" high, V-bracket
V4 .630" high, V-bracket
V6 .460" high, V-bracket
V8 .953" high, V-bracket
V31 .460" high, snap-in V-bracket
V81 .953" high, snap-in V-bracket
V91 1.150" high, snap-in V-bracket
W .750" long, wire wrap
Z Solder lug

Contact Material
B Gold
P Gold, matte-tin
Q Silver
G Gold over silver

Seal
E Epoxy

Dimensions are shown: Inches (mm)
Specifications and dimensions subject to change

E010 Series
Sealed Momentary Pushbutton Switches

SWITCH FUNCTION

NO. POLES	MODEL NO.	SWITCH FUNCTION POS. 1 (C&K marking this side)	SWITCH FUNCTION POS. 2 (C&K marking this side)	CONNECTED TERMINALS POS. 1 (C&K marking this side)	CONNECTED TERMINALS POS. 2 (C&K marking this side)	SCHEMATIC
SP	E112	ON	MOM.	2-1	2-3	SPDT: NC 1, 2 (COMM), 3 NO

SPDT

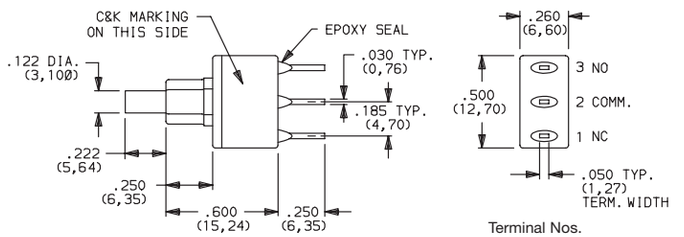

Part number shown: E112SD1CQE

MOM. = Momentary

All models c UL us with all options when ordered with G or Q contact material.

PLUNGER

S .218" HIGH

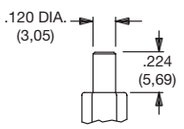

Standard with D1 bushing (as shown).

† Subtract .100 (2,54) from plunger length when ordered with Y bushing.

L .338" HIGH

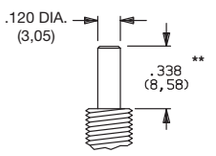

Standard with Y bushing (as shown).

** Add .100 (2,54) from plunger length when ordered with D1 bushing.

M .331" HIGH, SNAP-FITTING

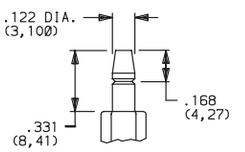

NOTE: Caps available for all plunger options, see pages A-50 and A-51.

BUSHING

D1 UNTHREADED

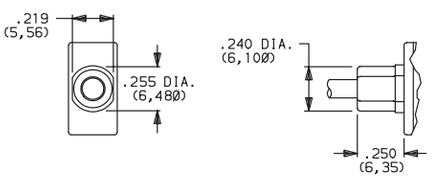

S plunger standard with D1 bushing.

Y THREADED, KEYWAY

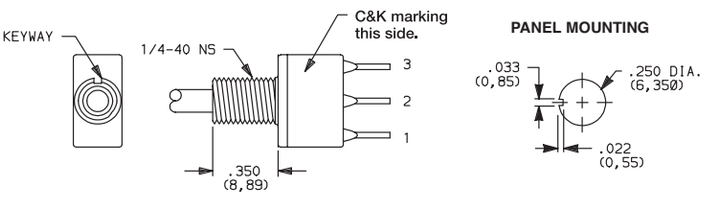

L plunger standard with Y bushing. Available only with C, Z terminations.
Hardware: One dress nut part number 299D01201, one hex nut and lockwasher supplied standard.

Withstands 4 in./lbs. without distortion.

NOTE: Internal o-ring actuator seal standard for all bushing options.

Third Angle Projection

Dimensions are shown: Inches (mm)
Specifications and dimensions subject to change

E010 Series
Sealed Momentary Pushbutton Switches

TERMINATIONS

C PC THRU-HOLE

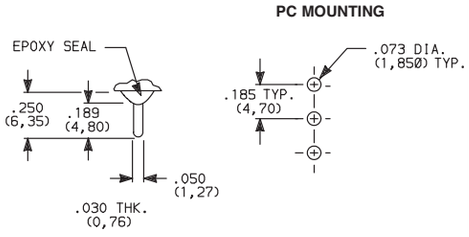

SPDT

Z SOLDER LUG

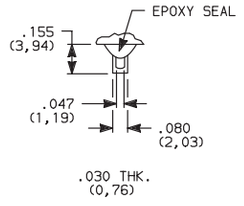

SPDT Not available with P contact materials.

W WIRE WRAP

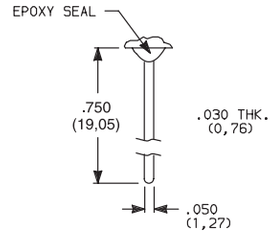

SPDT

A RIGHT ANGLE, PC THRU-HOLE

E112SD1ABE
SPDT

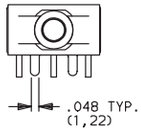

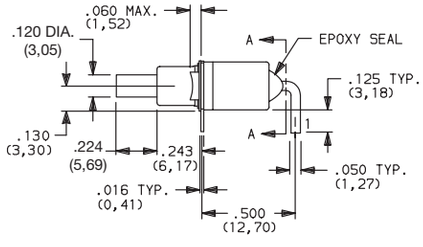

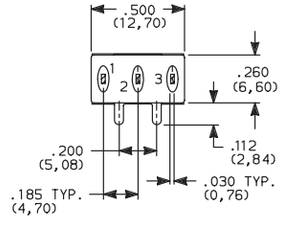

SECTION A-A

A3 RIGHT ANGLE, SNAP-IN, PC THRU-HOLE

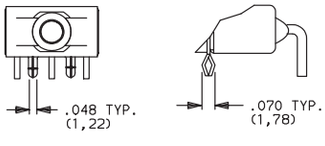

AW RIGHT ANGLE, EXTENDED, PC THRU-HOLE

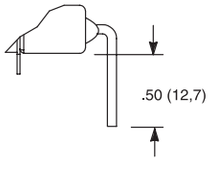

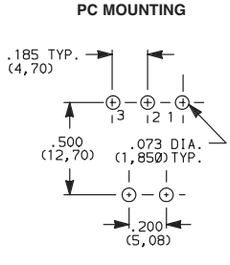

NOTE: Terminal bend radii and lead-in manufacturing option.
Available with D1 bushing only.

AV2 VERTICAL RIGHT ANGLE, PC THRU-HOLE, .150" PITCH

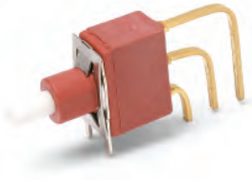

E112SD1AV2BE
SPDT

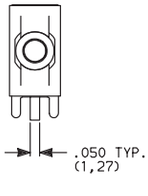

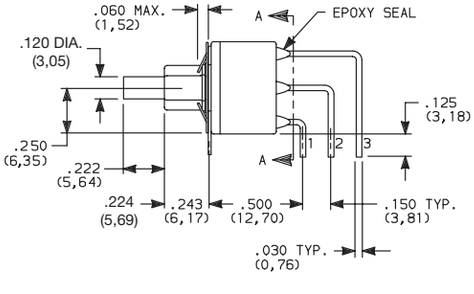

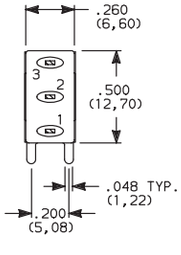

SECTION A-A

AV3 VERTICAL RIGHT ANGLE, SNAP-IN, PC THRU-HOLE, .150" PITCH

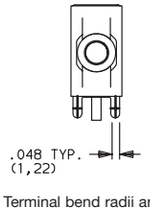

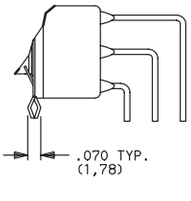

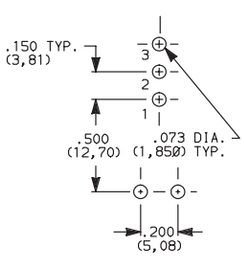

NOTE: Terminal bend radii and lead-in manufacturing option.
Available with D1 bushing only.

Third Angle Projection

Dimensions are shown: Inches (mm)
Specifications and dimensions subject to change

TERMINATIONS

R2 RIGHT ANGLE WITH PCB

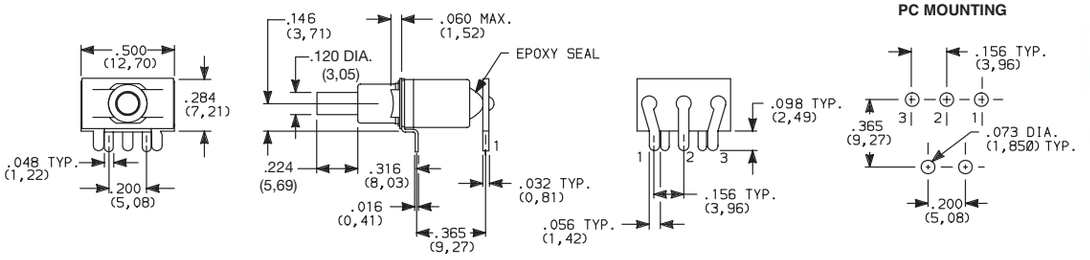

E112SD1R2BE
SPDT

NOTE: Available with D1 bushing and B contact material only.

V3, V4 VERTICAL MOUNT, V-BRACKET
V31, V91 VERTICAL MOUNT, V-BRACKET, SNAP-IN

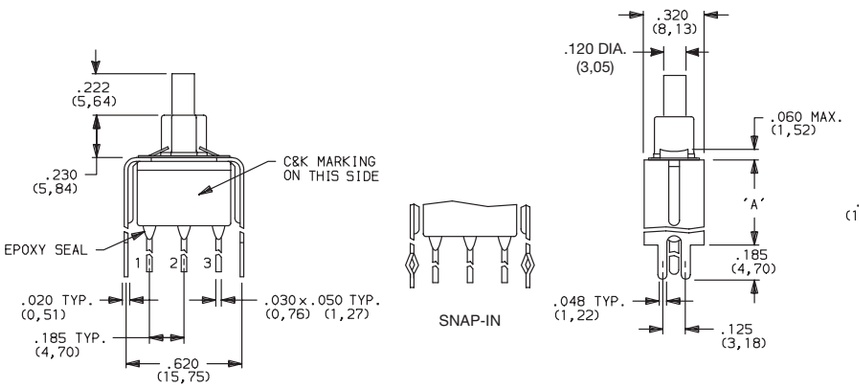

E112SD1__BE
SPDT

OPTION CODE	DIM 'A'
V3, V31	.460 (11,68)
V4	.630 (16,00)
V91	1.150 (29,21)

NOTE: Available with D1 bushing only.

V6, V8 VERTICAL MOUNT, V-BRACKET
V81 VERTICAL MOUNT, V-BRACKET, SNAP-IN

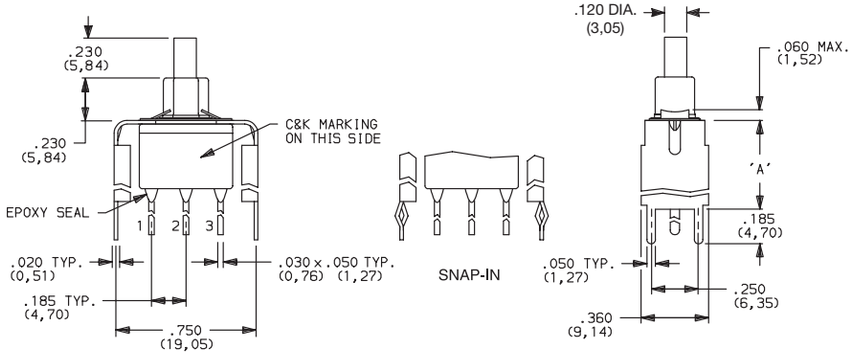

E112SD1__BE
SPDT

OPTION CODE	DIM 'A'
V6	.460 (11,68)
V8, V81	.953 (24,21)

NOTE: Available with D1 bushing only.

Third Angle Projection

Dimensions are shown: Inches (mm)
Specifications and dimensions subject to change

E010 Series
Sealed Momentary Pushbutton Switches

CONTACT MATERIAL

OPTION CODE	CONTACT MATERIAL	TERMINAL PLATING	RATINGS	
B	GOLD [1]	GOLD [1]	LOW LEVEL/DRY CIRCUIT	0.4 VA MAX. @ 20 V AC OR DC MAX.
P		MATTE-TIN [6]		
Q	SILVER [4,5]	SILVER [5]	POWER	4 AMPS @ 125 V AC 0R 28 V DC.
G	GOLD OVER SILVER [2,3]	GOLD [3]	LOW LEVEL/DRY CIRCUIT OR POWER	0.4 VA MAX. @ 20 V AC OR DC MAX. OR 4 AMPS @ 125 V AC 0R 28 V DC.

* Note: See Technical Data section of this catalog for RoHS compliant and compatible definitions and specifications.

[1] CONTACTS & TERMINALS: Copper alloy, with gold plate over nickel plate.
[2] END CONTACTS: Coin silver, with gold plate over nickel plate.
[3] CENTER CONTACTS & ALL TERMINALS: Coin silver, with gold plate over nickel plate.
[4] END CONTACTS: Coin silver, silver plated.
[5] CENTER CONTACTS & ALL TERMINALS: Copper alloy, silver plated.
[6] TERMINALS: Copper alloy, with matte-tin over nickel plate.

NOTE: Any models supplied with P, Q, B or G contact material are RoHS compliant.

All models c UL us with all options when ordered with G or Q contact material.
B contact material standard with all terminations except C, Z.
B contact material must be ordered with R2 terminations.
Q contact material standard with C, Z terminations.
P contact materials not available with Z terminations.

SEAL

E EPOXY SEAL

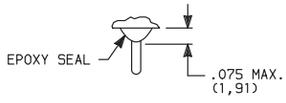

AVAILABLE HARDWARE

Cap

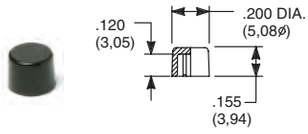

PART NO.
708901000 WHITE
708902000 BLACK
708903000 RED

Material: Nylon
Finish: Gloss

Cap

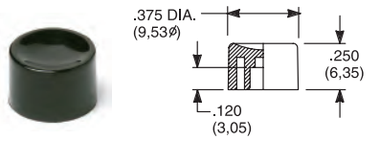

PART NO.
752701000 WHITE
752702000 BLACK
752703000 RED

Material: Nylon
Finish: Gloss

Cap

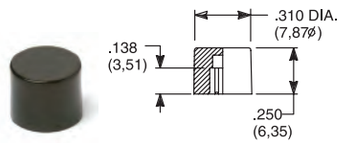

PART NO.
801801000 WHITE
801802000 BLACK
801803000 RED

Material: Nylon
Finish: Gloss

NOTE: Additional nuts, locking rings and lockwashers available separately, see section "Technical Data and Additional Hardware".
Other cap colors available, consult Customer Service Center.

Third Angle Projection

Dimensions are shown: Inches (mm)
Specifications and dimensions subject to change

AVAILABLE HARDWARE

Cap, Snap-fitting plunger

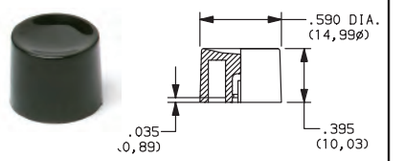

PART NO.

452D01000	WHITE
452D02000	BLACK
452D03000	RED

Material: Nylon
Finish: Gloss

Cap, Snap-fitting plunger

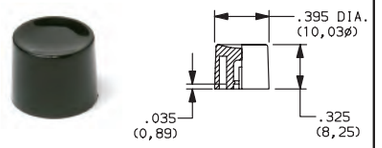

PART NO.

894101000	WHITE
894102000	BLACK
894103000	RED

Material: Nylon
Finish: Gloss

Cap

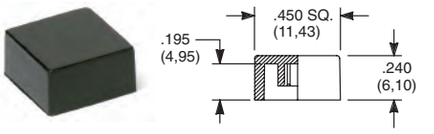

PART NO.

484601000	WHITE
484602000	BLACK
484603000	RED

Material: Nylon
Finish: Gloss

PART NO.

798201000	WHITE
798202263	BLACK
798203000	RED

Material: Nylon
Finish: Matte

NOTE: Additional nuts, locking rings and lockwashers available separately, see section "Technical Data and Additional Hardware".
Other cap colors available, consult Customer Service Center.

Frames snap into panel opening and are independent from switch mounting. Accurate positioning of the PC mounted switch relative to the panel opening is necessary to provide proper clearance between actuator and frame. Available in two basic styles and four panel thicknesses .047-.125 in. Material: Nylon. Finish: Matte.

TYPICAL APPLICATION

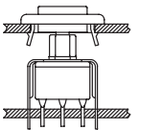

.047" (1,19) PANEL THK.	.062" (1,57) PANEL THK.	.090" (2,29) PANEL THK.	.125" (3,18) PANEL THK.
PART NO.	**PART NO.**	**PART NO.**	**PART NO.**
432502263	432602263	432702263	432802263 BLACK

PANEL MOUNTING

For part numbers
4325xxxxx, 4326xxxxx

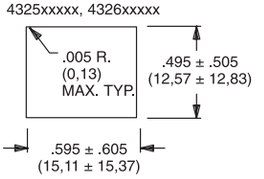

For part numbers
4327xxxxx, 4328xxxxx

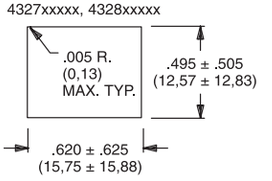

Panel Inserts

Above frames (part nos. 432XXXXXX) are also available with insert which accepts LED for indicator light assembly. Order insert separately from frame. Blank insert panel (without hole for LED) also available. **LED not included.**

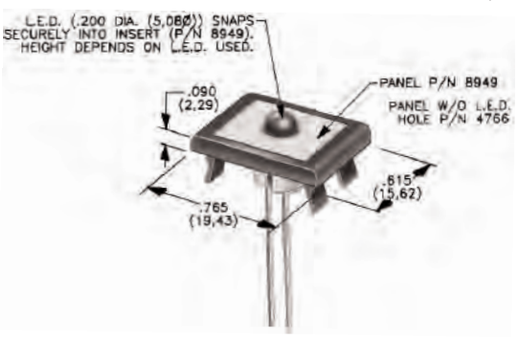

PANEL INSERT WITH HOLE FOR LED	BLANK PANEL INSERT WITHOUT HOLE FOR LED
PART NO.	**PART NO.**
894902000	476602000 BLACK

Special colors, custom markings available, consult Customer Service Center.

Third Angle Projection

Dimensions are shown: Inches (mm)
Specifications and dimensions subject to change

8060 Series
Alternate Action and Momentary Pushbutton Switches

Features/Benefits

- *Long travel*
- *Available with LED*
- *Long life contact design*
- *Epoxy terminal seal compatabile with bottom wash cleaning*
- *RoHS compliant models available*

Typical Applications

- *Instrumentation*
- *Computers and peripherals*
- *Telecommunications and networking equipment*

Models Available

Specifications

CONTACT RATING: Q contact material: 6 AMPS @ 120 V AC or 28 V DC; 3 AMPS @ 250 V AC. See page A-59 for additional ratings.

ELECTRICAL LIFE: 50,000 make-and-break cycles at full load.

CONTACT RESISTANCE: Below 20 mΩ typ. initial @ 2-4 V DC, 100 mA, for both silver and gold plated contacts.

INSULATION RESISTANCE: $10^9\Omega$ min.

DIELECTRIC STRENGTH: 1,000 Vrms min. @ sea level.

OPERATING TEMPERATURE: –30°C to 65°C

SOLDERABILITY: Per MIL-STD-202F method 208D, or EIA RS-186E method 9 (1 hour steam aging).

CAP INSTALLATION FORCE: 10 lbs. maximum permissible.

NOTE: Any models supplied with P, R, S, Q, B or G contact material are RoHS compliant.

NOTE: Specifications and materials listed above are for switches with standard options. For information on specific and custom switches, consult Customer Service Center.

Materials

CASE: Glass filled nylon 6/6 or diallyl phthalate (DAP), flame retardant (UL 94V-0).

PLUNGER: S, S1, S2 Options: Glass filled nylon or glass filled polyester (PBT) (UL 94V-0). L, L1 Options: Brass, nickel plated.

CAP & FRAME: Nylon, black standard.

BUSHING: Brass or zinc, nickel plated.

HOUSING: Stainless steel.

SWITCH SUPPORT: Brass or steel, matte-tin plated.

END CONTACTS: Q contact material: Coin silver, silver plated. See page A-59 for additional contact materials.

CENTER CONTACT & ALL TERMINALS: Q contact material: Copper alloy, silver plated. See page A-59 for additional contact materials.

TERMINAL SEAL: Epoxy. Refer to soldering and cleaning in Technical Data Chapter.

HARDWARE: Nut & Locking Ring: Brass, nickel plated; Lockwasher: Steel, nickel plated.

Build-A-Switch

To order, simply select desired option from each category and place in the appropriate box. Available options are shown and described on pages A-53 thru A-61. For additional options not shown in catalog, consult Customer Service Center. All models have epoxy terminal seal and are compatible with all "bottom-wash" PCB cleaning methods.

Switch Function
- **8161** SPDT On-On
- **8168** SPDT On-Mom.
- **8261** DPDT On-On

Actuator or Plunger
- **S** .710" high plunger with .375" dia. cap
- **J80** Snap-in
- **J81** Snap-in with frame
- **J82** Snap-in with frame for LED
- **J86** Snap-in with frame & LED
- **L** .740" high plunger with .395" dia. cap
- **L1** .740" high plunger with .590" dia. cap
- **S1** .615" high plunger with .200" dia. cap
- **S2** .710" high plunger with .310" dia. cap

Bushing
- **H** .300" high, flat, hi torque
- **H9** .300" high, flat, hi torque
- **NONE** No bushing choice required
- **Y3** 7.6mm, keyway

Terminations
- **A** Right angle, PC thru-hole
- **AV2** Vertical right angle, PC thru-hole
- **C** PC Thru-hole
- **Z** Solder lug
- **A3** Right angle, snap-in, PC thru-hole
- **AV3** Vertical right angle, snap-in, PC thru-hole
- **V3** .460" high, V-bracket
- **V4** .630" high, V-bracket
- **V6** .460" high, V-bracket
- **V21** .555" high, snap-in V-bracket
- **V31** .460" high, snap-in V-bracket
- **W** .750" long, wire wrap
- **Z3** Quick connect

Contact Material
- **B** Gold
- **P** Gold, matte-tin
- **Q** Silver
- **S** Silver, matte-tin
- **G** Gold over silver
- **R** Gold over silver, matte-tin

Seal
- **E** Epoxy
- **I** Epoxy potted base

Cap Color
- **2** Black
- **1** White
- **3** Red
- **4** Orange
- **5** Yellow
- **9** Gray

Frame Color
- **2** Black

LED Color
- **3** Red
- **NONE** Models without LED

8060 Series
Alternate Action and Momentary Pushbutton Switches

SWITCH FUNCTION

NO. POLES	MODEL NO.	SWITCH FUNCTION POS. 1	SWITCH FUNCTION POS. 2	CONNECTED TERMINALS POS. 1	CONNECTED TERMINALS POS. 2	SCHEMATIC
		C&K marking this side		C&K marking this side		
SP	8161	ON	ON	2-3	2-1	SPDT
	8168	ON	MOM.	2-3	2-1	
DP	8261	ON	ON	2-3,5-6	2-1,5-4	DPDT

SPDT

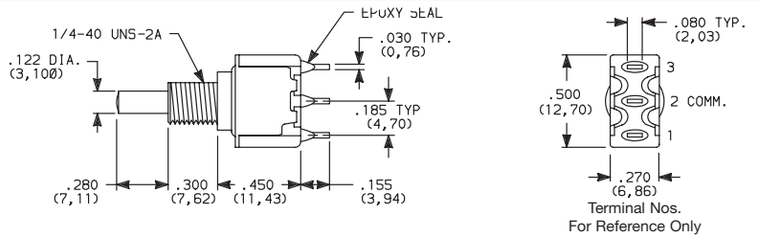

Part number shown: 8161SHZQE

DPDT

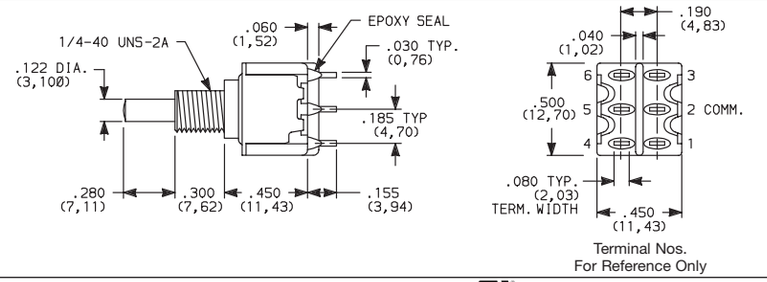

Part number shown: 8261SHZQE

MOM. = Momentary

All models c UL us with all options when ordered with G or Q contact material.

ACTUATOR—SNAP-IN FRONT MOUNT

CAP COLOR

ACTUATOR OR PLUNGER

OPTION CODE	CAP COLOR
2	BLACK
1	WHITE
3	RED
4	ORANGE
5	YELLOW
9	GRAY

Cap Finish: matte.
Other colors available, consult Customer Service Center.

Available with C, W, Z or Z3 terminations.

NOTE: Caps & frames available separately, see pages A-60 and A-61.

J80 SNAP-IN

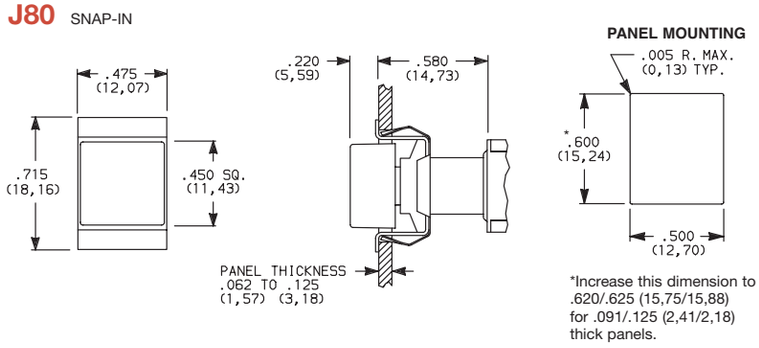

J81 SNAP-IN WITH BLACK FRAME

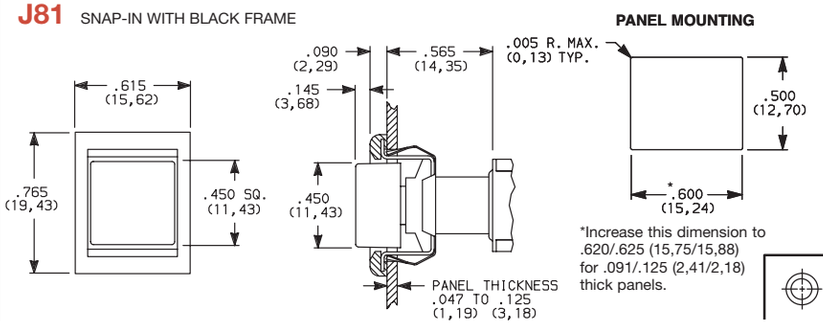

Third Angle Projection

Dimensions are shown: Inches (mm)
Specifications and dimensions subject to change

8060 Series
Alternate Action and Momentary Pushbutton Switches

ACTUATOR—SNAP-IN FRONT MOUNT

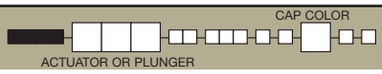

J82 SNAP-IN WITH BLACK FRAME FOR LED

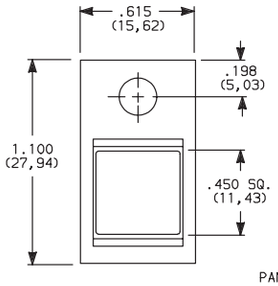

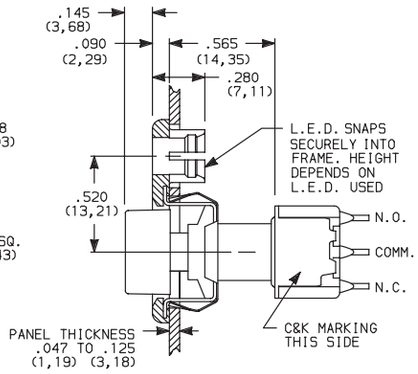

PANEL MOUNTING

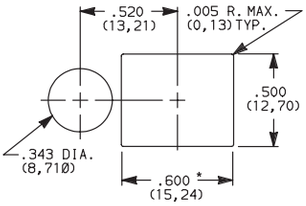

* Increase this dimension to .620/.625 (15,75/15,88) for .091/.125 (2,31/3,18) thick panels.

Available with C, W, Z or Z3 terminations.

LED not included.
For LED information, see page A-61.

NOTE: Caps & frames available separately, see pages A-60 and A-61.

Other colors available, consult Customer Service Center.

OPTION CODE	CAP COLOR
2	BLACK
1	WHITE
3	RED
4	ORANGE
5	YELLOW
9	GRAY

ACTUATOR—SNAP-IN FRONT MOUNT

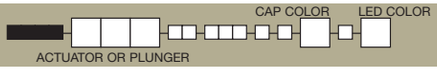

J86 SNAP-IN WITH BLACK FRAME AND LED

8161J86ZQE223
SPDT

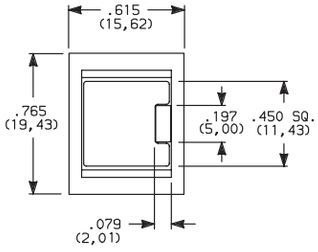

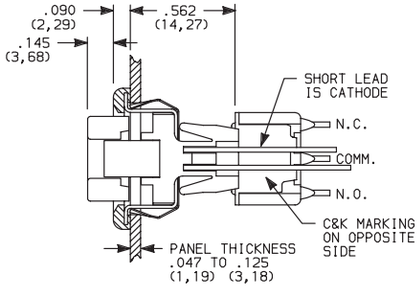

PANEL MOUNTING

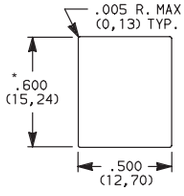

* Increase this dimension to .620/.625 (15,75/15,88) for .091/.125 (2,31/3,18) thick panels.

Available with C, W, Z or Z3 terminations and SPDT models only.

NOTE: Caps & frames available separately, see pages A-60 and A-61.

Other colors available, consult Customer Service Center.

OPTION CODE	CAP COLOR
2	BLACK
1	WHITE
3	RED
4	ORANGE
5	YELLOW
9	GRAY

OPTION CODE	LED COLOR
3	RED

For LED information, see page A-61.

Third Angle Projection

Dimensions are shown: Inches (mm)
Specifications and dimensions subject to change

PLUNGER

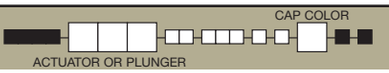

S PLUNGER WITH CAP P/N 7527

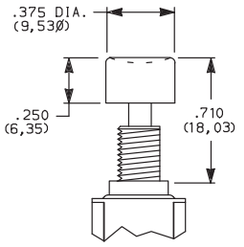

S1 PLUNGER WITH CAP P/N 7089

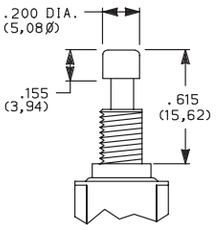

S2 PLUNGER WITH CAP P/N 8018

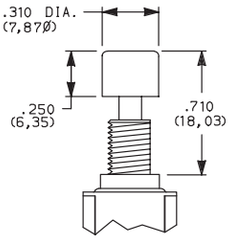

S, S1, S2 plunger dimensions.

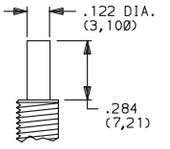

Plunger material: Glass filled nylon or glass filled polyester (UL 94V-0).

L PLUNGER WITH CAP P/N 8941

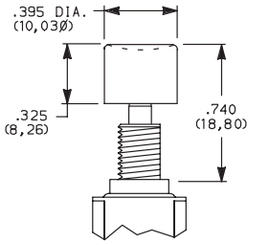

L1 PLUNGER WITH CAP P/N 8940

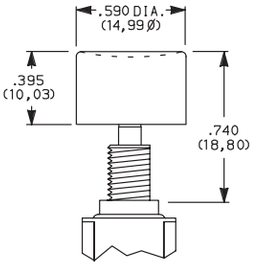

L, L1 plunger dimensions.

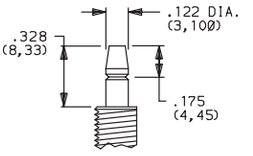

Plunger Material: Brass, chrome plated.

OPTION CODE	CAP COLOR
2	BLACK
1	WHITE
3	RED
4	ORANGE
5	YELLOW
9	GRAY

Cap Finish: gloss. Cap supplied not installed. Other colors available, consult Customer Service Center.

NOTE: When selecting plunger and cap option, bushing selection must also be made, see below.

BUSHING

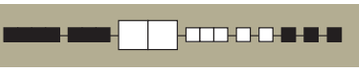

H .300" HIGH THREADED, FLAT

H9 .300" HIGH UNTHREADED, FLAT

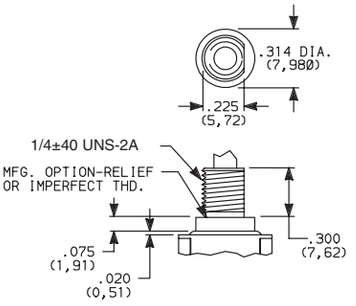

H bushing standard with C, W, Z or Z3 terminations.
H9 bushing standard with A, A3, AV2, AV3, or V3-V31 terminations.

Withstands 12 in./lbs. of torque with no distortion.

NONE NO BUSHING CHOICE REQUIRED (JXX ACTUATORS)

Y3 7.6mm THREADED, KEYWAY

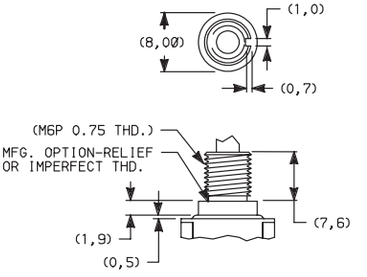

Withstands 12 in./lbs. of torque with no distortion.

NOTE: When selecting bushing option, plunger selection must also be made, see above. No bushing option choice required when any JXX actuator option is selected.

PANEL MOUNTING

1/4 IN. BUSHING

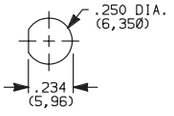

Without Locking Ring

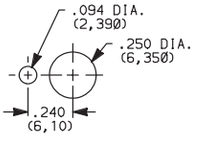

With Standard Locking Ring

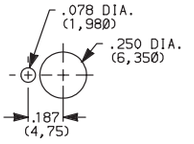

With Small Locking Ring

METRIC BUSHING

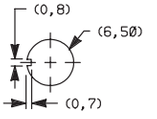

Without Locking Ring

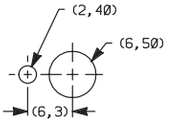

With Locking Ring

NOTE. Two mounting nuts, locking ring and lockwasher supplied standard with threaded bushings. Optional mounting nut and locking ring styles and finishes available, see section "Technical Data and Additional Hardware".

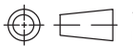

Third Angle Projection

Dimensions are shown: Inches (mm)
Specifications and dimensions subject to change

8060 Series
Alternate Action and Momentary Pushbutton Switches

TERMINATIONS

C PC THRU-HOLE

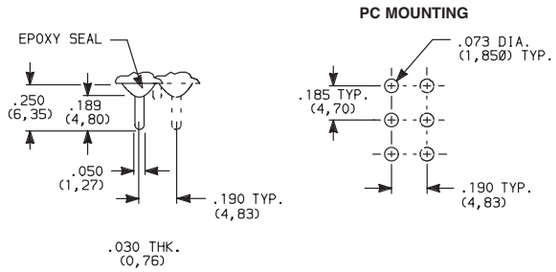

SPDT and DPDT

Z SOLDER LUG

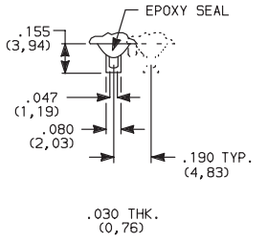

SPDT and DPDT

Not available with P, S or R contact material.

Z3 QUICK CONNECT

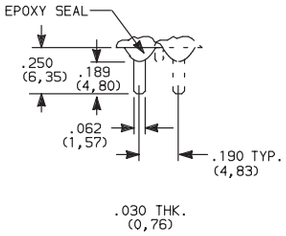

SPDT and DPDT

Not available with P, S or R contact material.
Mating quick connector available;
order part number 530100000, page A-61.

W WIRE WRAP

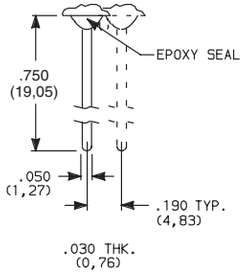

SPDT and DPDT

A RIGHT ANGLE, PC THRU-HOLE

8161SH9ABE2
SPDT

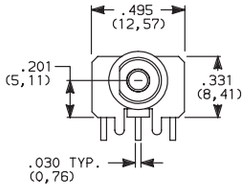

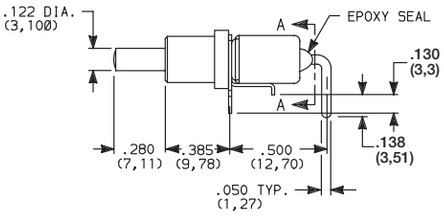

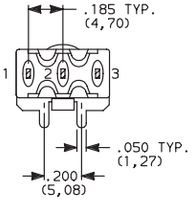

SECTION A-A

A3 RIGHT ANGLE, SNAP-IN, PC THRU-HOLE

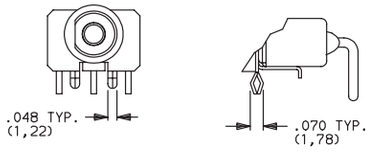

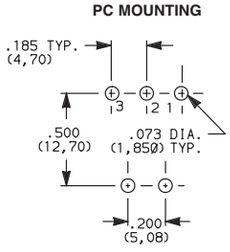

NOTE: PC pattern must clear switch support leg.

Not available with I seal.
Terminal bend radii and lead-in manufacturing option.

Third Angle Projection

Dimensions are shown: Inches (mm)
Specifications and dimensions subject to change

TERMINATIONS

A RIGHT ANGLE, PC THRU-HOLE

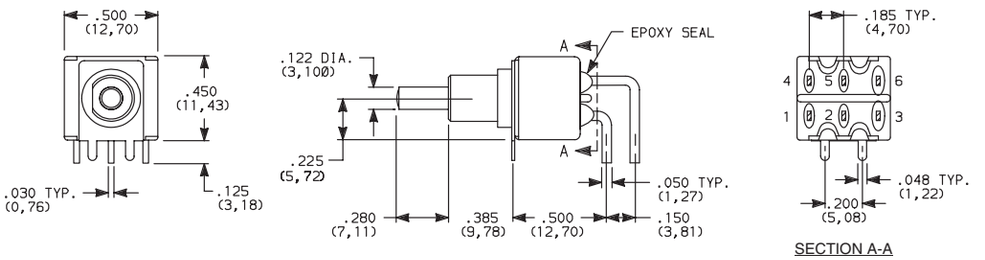

8261SH9ABE2
DPDT

A3 RIGHT ANGLE, SNAP-IN, PC THRU-HOLE

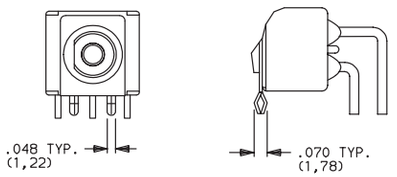

PC MOUNTING

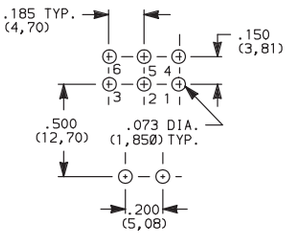

Not available with I seal.
Terminal bend radii and lead-in manufacturing option.

AV2 VERTICAL RIGHT ANGLE, PC THRU-HOLE, .150" PITCH

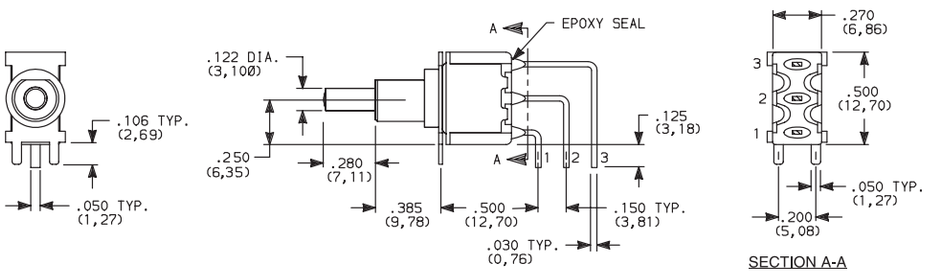

8161SH9AV2BE2
SPDT

AV3 VERTICAL RIGHT ANGLE, SNAP-IN, PC THRU-HOLE, .150" PITCH

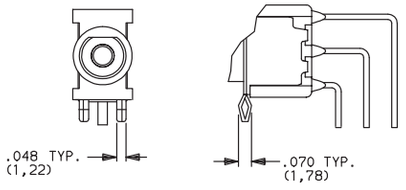

PC MOUNTING

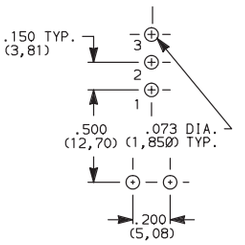

Not available with I seal.
Terminal bend radii and lead-in manufacturing option.

Third Angle Projection

Dimensions are shown: Inches (mm)
Specifications and dimensions subject to change

8060 Series
Alternate Action and Momentary Pushbutton Switches

TERMINATIONS

AV2 VERTICAL RIGHT ANGLE, PC THRU-HOLE, .150" PITCH

8261SH9AV2BE2
DPDT

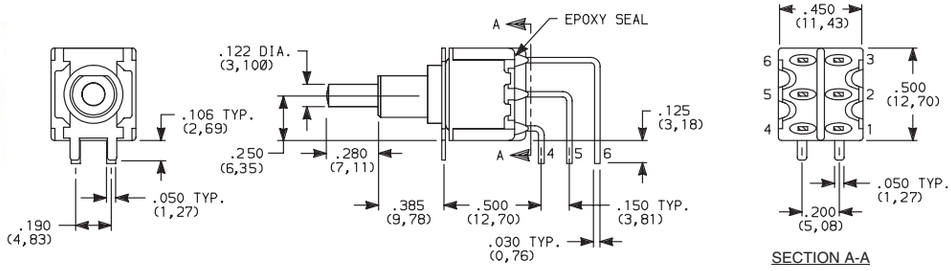

AV3 VERTICAL RIGHT ANGLE, SNAP-IN, PC THRU-HOLE, .150" PITCH

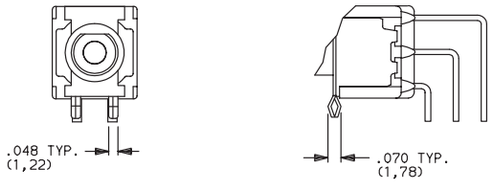

PC MOUNTING

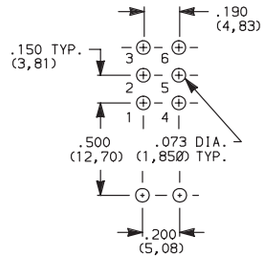

Not available with I seal.
Terminal bend radii and lead-in manufacturing option.

V6 VERTICAL MOUNT, V-BRACKET
V21 VERTICAL MOUNT, V-BRACKET, SNAP-IN

8161SH9__BE2
SPDT

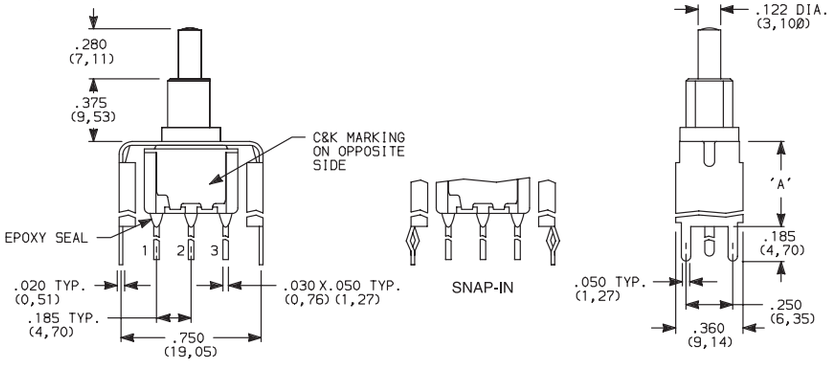

PC MOUNTING

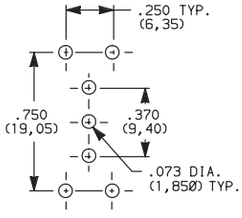

OPTION CODE	DIM 'A'
V21	.555 (14,10)
V6	.460 (11,68)

Not available with I seal.

V6 VERTICAL MOUNT, V-BRACKET
V21 VERTICAL MOUNT, V-BRACKET, SNAP-IN

8261SH9__BE2
DPDT

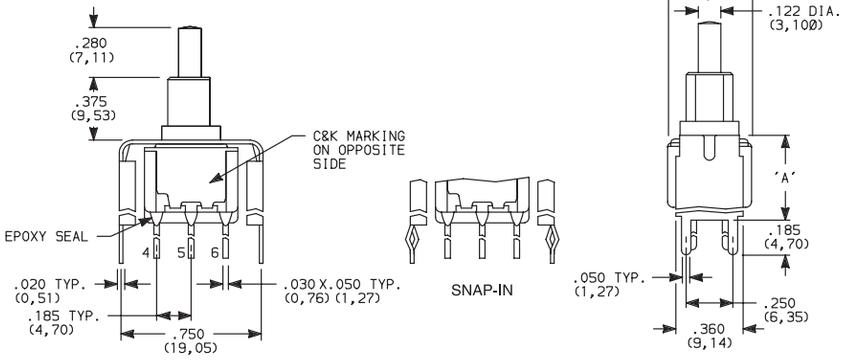

PC MOUNTING

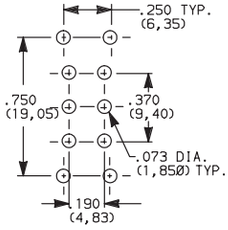

OPTION CODE	DIM 'A'
V21	.555 (14,10)
V6	.460 (11,68)

Not available with I seal.

Third Angle Projection

Dimensions are shown: Inches (mm)
Specifications and dimensions subject to change

TERMINATIONS

V3, V4 VERTICAL MOUNT, V-BRACKET

V31 VERTICAL MOUNT, V-BRACKET, SNAP-IN

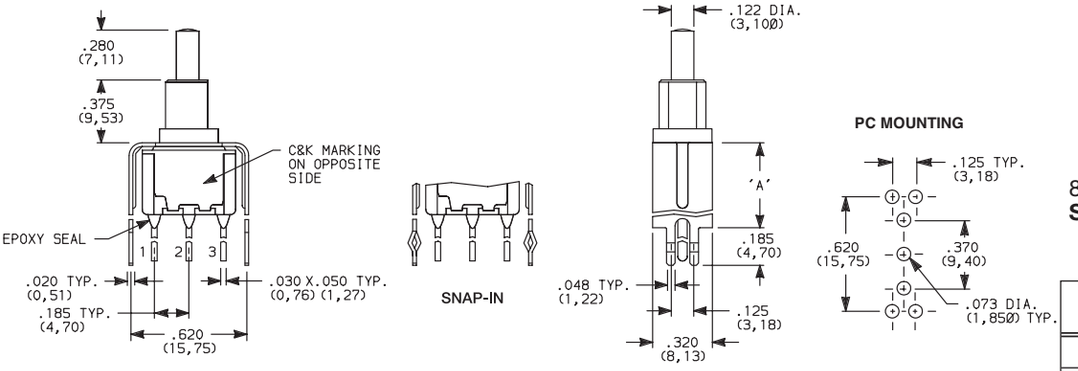

8161SH9__BE2
SPDT

OPTION CODE	DIM 'A'
V3, V31	.460 (11,68)
V4	.630 (16,00)

Not available with I seal.

V3, V4 VERTICAL MOUNT, V-BRACKET

V31 VERTICAL MOUNT, V-BRACKET, SNAP-IN

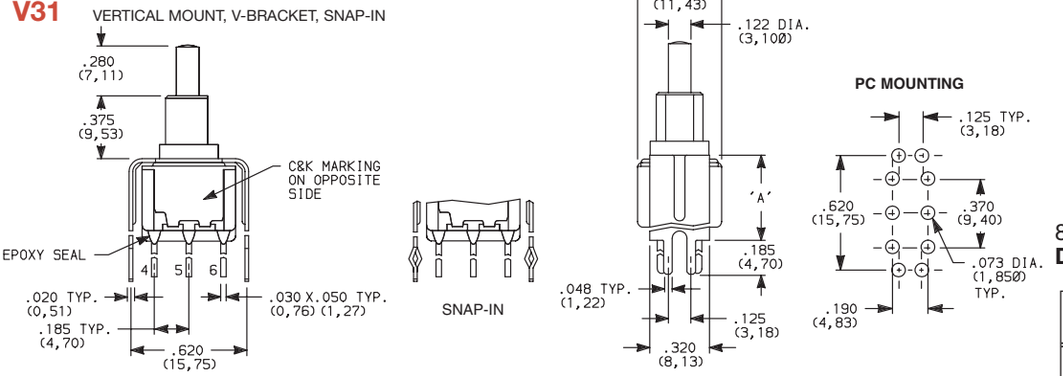

8261SH9__BE2
DPDT

OPTION CODE	DIM 'A'
V3, V31	.460 (11,68)
V4	.630 (16,00)

Not available with I seal.

CONTACT MATERIAL

OPTION CODE	CONTACT MATERIAL	TERMINAL PLATING	RATINGS	
B	GOLD [1]	GOLD [1]	LOW LEVEL/DRY CIRCUIT	0.4 VA MAX. @ 20 V AC OR DC MAX.
P		MATTE-TIN [6]		
Q	SILVER [4,5]	SILVER [5]	POWER	6 AMPS @ 120 V AC OR 28 V DC; 3 AMPS @ 250 V AC.
S		MATTE-TIN [6]		
G	GOLD OVER SILVER [2,3]	GOLD [3]	LOW LEVEL/DRY CIRCUIT OR POWER	0.4 VA MAX @ 20 V AC OR DC MAX. OR 6 AMPS @ 120 V AC OR 28 V DC; 3 AMPS @ 250 V AC.
R		MATTE-TIN [6]		

* Note: See Technical Data section of this catalog for RoHS compliant and compatible definitions and specifications.

[1] CONTACTS & TERMINALS: Copper alloy, with gold plate over nickel plate.

[2] END CONTACTS: Coin silver, with gold plate over nickel plate.

[3] CENTER CONTACTS & ALL TERMINALS: Copper alloy, with gold plate over nickel plate.

[4] END CONTACTS: Coin silver, silver plated.

[5] CENTER CONTACT & ALL TERMINALS: Copper alloy, silver plated.

[6] TERMINALS: Copper alloy, with matte-tin over nickel plate.

NOTE: Any models supplied with P, S, R,Q, B or G contact material are RoHS compliant.

All models c UL us with all options when ordered with S, R, G, or Q contact material.

B contact material standard with all terminations except C, Z & Z3.

Q contact material standard with C, Z & Z3 terminations.

P, S & R contact materials not available with Z & Z3 terminations.

Third Angle Projection

Dimensions are shown: Inches (mm)
Specifications and dimensions subject to change

8060 Series
Alternate Action and Momentary Pushbutton Switches

SEAL

E EPOXY SEAL

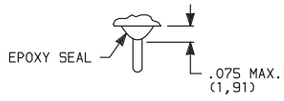

I EPOXY POTTED BASE

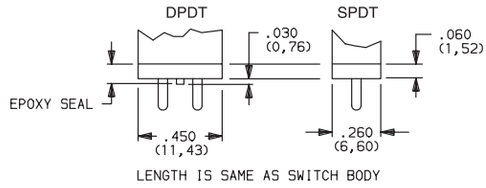

NOTE: Available with C, W, Z, Z3 terminations only.

AVAILABLE HARDWARE

Cap

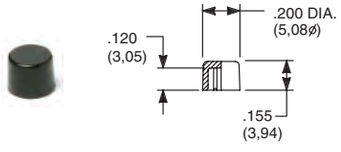

PART NO.

708901000	WHITE
708902000	BLACK
708903000	RED
708904000	ORANGE
708905000	YELLOW
708909000	GRAY

Material: Nylon
Finish: Gloss

Cap

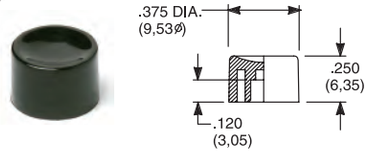

PART NO.

752701000	WHITE
752702000	BLACK
752703000	RED
752704000	ORANGE
752705000	YELLOW
752709000	GRAY

Material: Nylon
Finish: Gloss

Cap

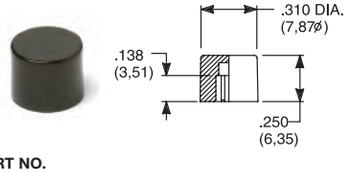

PART NO.

801801000	WHITE
801802000	BLACK
801803000	RED
801804000	ORANGE
801805000	YELLOW
801809000	GRAY

Material: Nylon
Finish: Gloss

Cap, Snap-fitting plunger

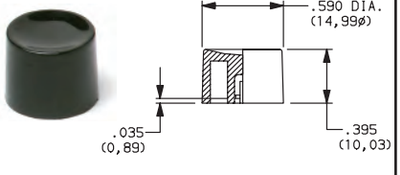

PART NO.

452D01000	WHITE
452D02000	BLACK
452D03000	RED
452D04000	ORANGE
452D05000	YELLOW
452D09000	GRAY

Material: Nylon
Finish: Gloss

Cap, Snap-fitting plunger

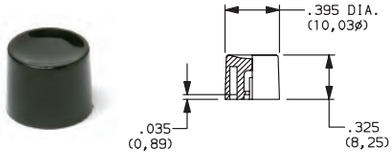

PART NO.

894101000	WHITE
894102000	BLACK
894103000	RED
894104000	ORANGE
894105000	YELLOW
894109000	GRAY

Material: Nylon
Finish: Gloss

Cap, J80, J81 & J82 options only

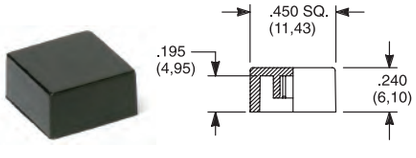

PART NO.

484601000	WHITE
484602000	BLACK
484603000	RED
484604000	ORANGE
484605000	YELLOW
484609000	GRAY

Material: Nylon
Finish: Gloss

PART NO.

798201000	WHITE
798202263	BLACK
798203000	RED
798204000	ORANGE
798205000	YELLOW
798209000	GRAY

Material: Nylon
Finish: Matte

Cap, J86 & J96 options only

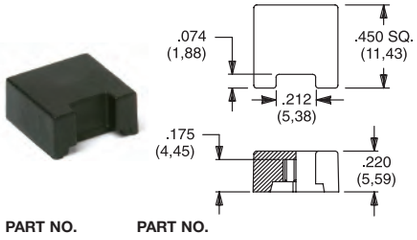

PART NO.

459701000	WHITE
459702000	BLACK
459703000	RED
459704000	ORANGE
459705000	YELLOW
459709000	GRAY

Material: Nylon
Finish: Gloss

PART NO.

476801000	WHITE
476802000	BLACK
476803000	RED
476804000	ORANGE
476805000	YELLOW
476809000	GRAY

Material: Nylon
Finish: Matte

Frame

PART NO.

615602263 BLACK

Material: Nylon
Finish: Matte

Frame

PART NO.

613302263 BLACK

Material: Nylon
Finish: Matte

NOTE: Additional nuts, locking rings and lockwashers available separately, see section "Technical Data and Additional Hardware".
Other cap & frame colors available, consult Customer Service Center.

Third Angle Projection

Dimensions are shown: Inches (mm)
Specifications and dimensions subject to change

AVAILABLE HARDWARE

Fits Z3 Termination female connector

PART NO.
530100000
Available in loose pieces.

Frames snap into panel opening and are independent from switch mounting. Accurate positioning of the PC mounted switch relative to the panel opening is necessary to provide proper clearance between actuator and frame. Available in two basic styles and four panel thicknesses .047-.125 in. Material: Nylon. Finish: Matte.

TYPICAL APPLICATION

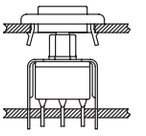

.047" (1,19) PANEL THK.	.062" (1,57) PANEL THK.	.090" (2,29) PANEL THK.	.125" (3,18) PANEL THK.
PART NO.	**PART NO.**	**PART NO.**	**PART NO.**
432502263	**432602263**	**432702263**	**432802263** BLACK

PANEL MOUNTING

For part numbers 4325xxxxx, 4326xxxxx

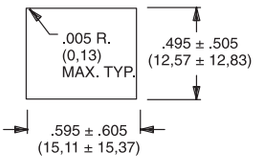

For part numbers 4327xxxxx, 4328xxxxx

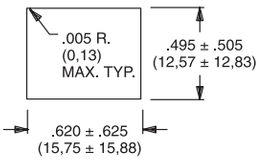

Panel Inserts

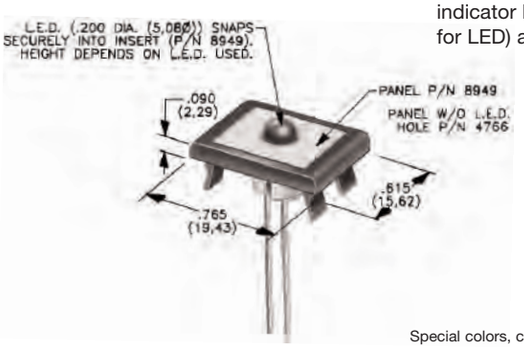

Above frames (part nos. 432XXXXXX) are also available with insert which accepts LED for indicator light assembly. Order insert separately from frame. Blank insert panel (without hole for LED) also available. **LED not included.**

PANEL INSERT WITH HOLE FOR LED	BLANK PANEL INSERT WITHOUT HOLE FOR LED
PART NO.	**PART NO.**
894902000	**476602000** BLACK

Special colors, custom markings available, consult Customer Service Center.

LED INFORMATION

SWITCHES WITH LED SUPPLIED: J86 OPTION:
Rectangular LEDs are supplied on 8060 Series pushbutton switches with J86 option. These LEDs are factory installed and are not replaceable. The following specifications apply:

OPTION CODE	COLOR	TYP. INTENSITY	TYP. FORWARD VOLTAGE	TYP. FORWARD CURRENT	MAX RATINGS AT 25°C AMBIENT TEMPERATURE		
					FORWARD VOLTAGE	CONTINUOUS FORWARD CURRENT	POWER DISSIPATION
6	Green	1.0 mcd	2.1 V	20 mA	2.5 V	50 mA	125 mW
3	Red*	0.5 mcd		10 mA		30 mA	75 mW
5	Yellow	4.0 mcd		20 mA		50 mA	125 mW

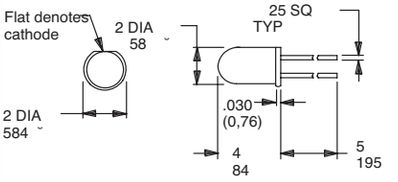

Suggested LED for J82 & J84 options
Dimensions for reference only

Process Information: Soldering to LED leads must be completed within 5 seconds at 500°F (260°C) maximum.
Caution: Circuit elements must limit forward current of LED to 50mA max. continuous.
* Extra-bright red LED available (typ. intensity 4.5 mcd), consult Customer Service Center.
LEDs are not supplied with J82 & J84 options. LED snaps into switch frame surrounding actuator and is wired externally.

Third Angle Projection

Dimensions are shown: Inches (mm)
Specifications and dimensions subject to change

8500 Series
Subminiature Pushbutton Switches

Features/Benefits

- *Pre-travel or over-travel models available*
- *Ratings up to 3 AMPS*
- *Reliable contact design*
- *RoHS compliant*

Typical Applications

- *Detection*
- *Telecommunications and networking equipment*
- *Computers and peripherals*

Models Available

Specifications

CONTACT RATING: Q contact material (853X Models): 1 AMP @ 120 V AC or 28 V DC; (855X Models): 3 AMPS @ 120 V AC or 28 V DC. See page A-65 for additional ratings.

ELECTRICAL LIFE:
853X MODELS: 250,000 actuations at full load.
855X MODELS: 10,000 actuations at full load.

CONTACT RESISTANCE: Below 30 mΩ typ. initial @ 2-4 V DC, 100 mA, for both silver and gold plated contacts.

INSULATION RESISTANCE: $10^9\Omega$ min.

DIELECTRIC STRENGTH: 1,000 Vrms min. @ sea level.

OPERATING TEMPERATURE: –30°C to 65°C.

TORQUE SPECS: T, T1 15/32" bushings - 50 in. lbs max. All other 1/4 -40 bushing types 12 in. lbs max.

Materials

CASE: Glass filled phenolic or diallyl phthalate (DAP) (UL 94V-0).

PLUNGER: Phenolic or glass filled polyester, black standard(UL94V-0).

CAP & FRAME: Nylon, black, standard.

BUSHING: Brass, nickel plated.

CONTACTS: Q contact material: Coin silver, silver plated. See page A-65 for additional contact materials.

TERMINALS: Q contact material: Copper alloy, silver plated. See page A-65 for additional contact materials.

TERMINAL SEAL: Epoxy.

HARDWARE: Nut: Brass, nickel plated; Lockwasher: Steel, bright nickel plated.

NOTE: Any models supplied with Q, B or G contact material are RoHS compliant.

NOTE: Specifications and materials listed above are for switches with standard options. For information on specific and custom switches, consult Customer Service Center.

Build-A-Switch

To order, simply select desired option from each category and place in the appropriate box. Available options are shown and described on pages A-63 thru A-66. For additional options not shown in catalog, consult Customer Service Center. All models have epoxy terminal seal and are compatible with all "bottom-wash" PCB cleaning methods.

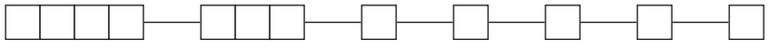

Switch Function
- **8531** SPST Off-Mom. 1 Amp
- **8532** SPST Off-Mom. 1 Amp
- **8533** SPST On-Mom. 1 Amp
- **8534** SPST On-Mom. 1 Amp
- **8551** SPST Off-Mom. 3 Amps
- **8552** SPST Off-Mom. 3 Amps

Actuator or Plunger
- **M** .150" high
- **J81** Snap-in with frame
- **J82** Snap-in with frame for LED
- **S** .210" high
- **T** 15/32 bushing
- **T1** 15/32 bushing with frame (8532 and 8534 only)

Terminations
- **Z** Solder lug
- **AV*** Right angle, PC thru-hole
- **C** PC Thru-hole

Contact Material
- **Q** Silver
- **B** Gold
- **G** Gold over silver

Seal
- **E** Epoxy
- **D** No epoxy seal

Cap or Plunger Color
- **2** Black
- **1** White
- **3** Red
- **9** Gray

Frame Color
- **2** Black
- **NONE** Models without frame

* Available with M or S plunger models, and B contact material only.

Dimensions are shown: Inches (mm)
Specifications and dimensions subject to change

SWITCH FUNCTION

NO. POLES	MODEL NO.	RATING	SWITCH FUNCTION POS. 1	SWITCH FUNCTION POS. 2	TOTAL TRAVEL	ACTUATION FORCE	SCHEMATIC
SP	8531	1 AMP	OFF	MOM.	.095 (2,41) TYP. with overtravel .042 (1,07) TYP.	7.7 oz (220g) TYP.	N.O. with overtravel
	8551	3 AMPS					

SPST

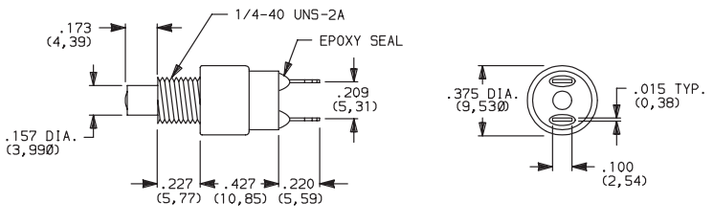

Part number shown: 8531MZQE2

NO. POLES	MODEL NO.	RATING	SWITCH FUNCTION POS. 1	SWITCH FUNCTION POS. 2	TOTAL TRAVEL	ACTUATION FORCE	SCHEMATIC
SP	8532	1 AMP	OFF	MOM.	.050 (1,27) TYP.	6 oz (170g) TYP.	N.O.
	8552	3 AMPS					

SPST

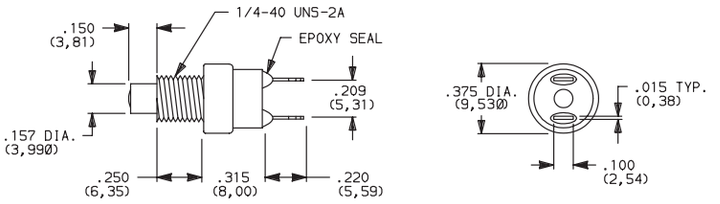

Part number shown: 8532MZQE2

NO. POLES	MODEL NO.	RATING	SWITCH FUNCTION POS. 1	SWITCH FUNCTION POS. 2	TOTAL TRAVEL	ACTUATION FORCE	SCHEMATIC
SP	8533	1 AMP	ON	MOM.	.080 (2,03) TYP. with pretravel .057 (1,45) TYP.	11.5 oz (456 g) TYP.	N.C. with pretravel
	8534	1 AMP	ON	MOM.	.032 (0,81) TYP. with overtravel .028 (0,71) TYP.	10.3 oz (282g) TYP.	N.C. with overtravel

SPST

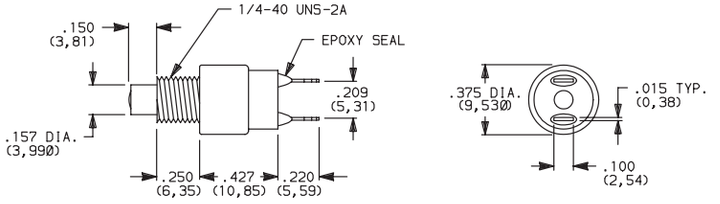

Part number shown: 8533MZQE2

MOM. = Momentary

All models with all options when ordered with G or Q contact material.

Third Angle Projection

Dimensions are shown: Inches (mm)
Specifications and dimensions subject to change

8500 Series
Subminiature Pushbutton Switches

PLUNGER

M .150" HIGH PLUNGER

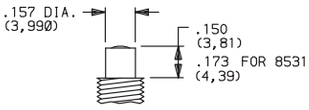

S .210" HIGH PLUNGER

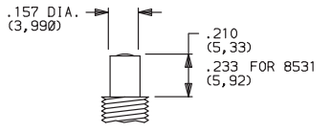

PANEL MOUNTING

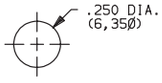

OPTION CODE	PLUNGER COLOR
2	BLACK
3	RED

NOTE: One mounting nut and lockwasher supplied with all actuators (except T actuator: two nuts supplied).

ACTUATOR

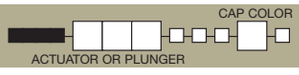

T 15/32 BUSHING

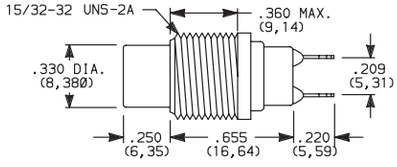

NOTE: No frame color choice required.

T1 15/32 BUSHING WITH FRAME

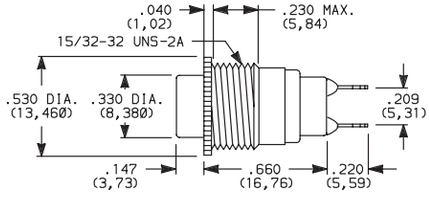

NOTE: No frame color choice required.
Available with 8532 and 8534 models only.

PANEL MOUNTING

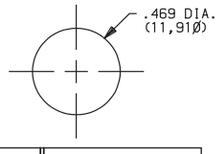

OPTION CODE	CAP COLOR
2	BLACK
1	WHITE
3	RED
9	GRAY

Cap Finish: gloss. Other colors available, consult Customer Service Center.

One mounting nut and lockwasher supplied with all actuators (except T actuator: two nuts supplied).

NOTE: Caps available for plunger options, see page A-65.

ACTUATOR—SNAP-IN FRONT MOUNT

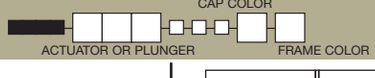

J81 SNAP-IN WITH FRAME

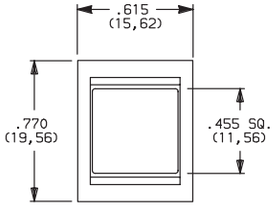

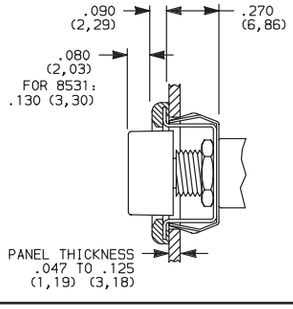

OPTION CODE	CAP AND FRAME COLOR
2	BLACK

Cap and Frame Finish: matte.
Other colors available,
consult Customer Service Center.

One mounting nut and lockwasher supplied with all actuators.

NOTE: Caps & frames available separately, see pages A-65 and A-66.

PANEL MOUNTING

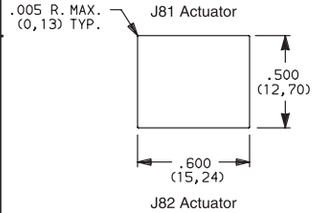

J82 SNAP-IN WITH FRAME FOR LED

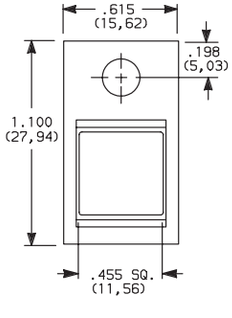

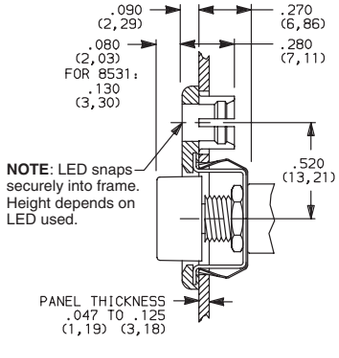

NOTE: LED snaps securely into frame. Height depends on LED used.

LED not included.
For LED information, see page A-66.

J82 Actuator

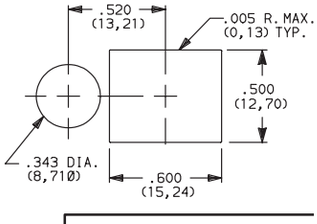

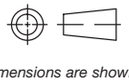
Third Angle Projection

Dimensions are shown: Inches (mm)
Specifications and dimensions subject to change

TERMINATIONS

Z SOLDER LUG

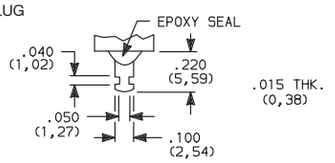

C PC THRU-HOLE

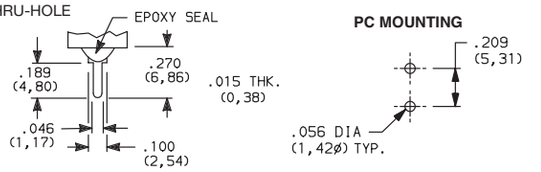

AV RIGHT ANGLE, PC THRU-HOLE

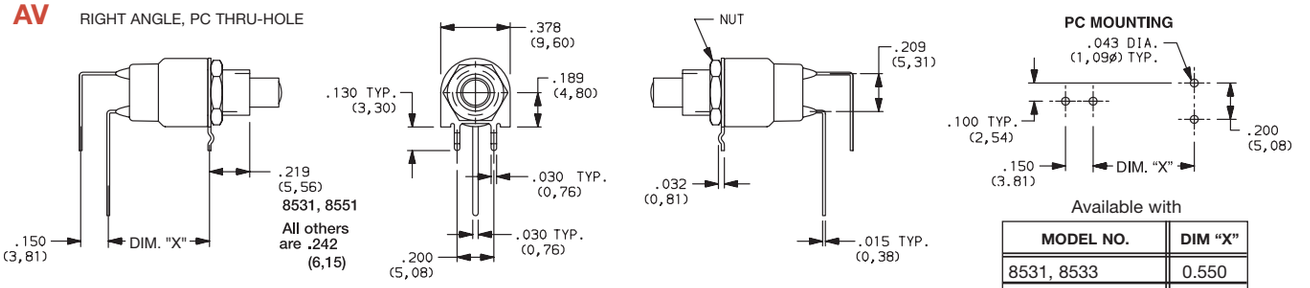

NOTE: Available with M or S plunger models, and B contact material only.

Available with

MODEL NO.	DIM "X"
8531, 8533	0.550
8532, 8534	0.438

CONTACT MATERIAL

OPTION CODE	RoHS COMPLIANT *	RoHS COMPATIBLE *	TERMINAL PLATING	CONTACT MATERIAL	RATINGS	
B	YES	YES	GOLD [1]	GOLD	LOW LEVEL/DRY CIRCUIT	0.4 VA MAX. @ 20 V AC OR DC MAX.
Q	YES	YES	SILVER [4]	SILVER [5]	POWER	853X MODELS: 1 AMP @ 120 V AC OR 28 V DC. 855X MODELS: 3 AMPS @ 120 V AC OR 28 V DC.
G	YES	YES	GOLD OVER SILVER [2]	GOLD [3]	LOW LEVEL/DRY CIRCUIT OR POWER	0.4 V MAX @20 V AC OR DC MAX. OR 853X MODELS: 1 AMP @ 120 V AC OR 28 V DC. 855X MODELS: 3 AMPS @120 V AC OR 28 V DC.

* Note: See Technical Data section of this catalog for RoHS compliant and compatible definitions and specifications.

[1] CONTACTS & TERMINALS: Copper alloy, with gold plate over nickel plate.
[2] CONTACTS: Coin silver, with gold plate over nickel plate.
[3] TERMINALS: Copper alloy, with gold plate over nickel plate.
[4] CONTACTS: Coin silver, silver plated.
[5] TERMINALS: Copper alloy, silver plated.

NOTE: Any models supplied with Q, B or G contact material are RoHS compliant.

All models ®ᴿᵁ with all options when ordered with G or Q contact material.

Q contact material standard with C, Z terminations.

8551 & 8552 available with Q contact material only.

SEAL

E EPOXY SEAL

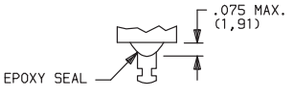

REPLACEMENT HARDWARE

Cap for 0.157" dia. plungers

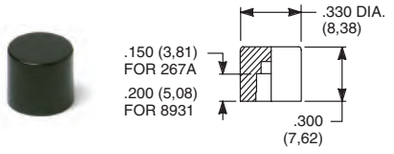

PART NO.		PART NO.	
267A01000	WHITE	893101000	WHITE
267A02000	BLACK	893102000	BLACK
267A03000	RED	893103000	RED
267A09000	GRAY	893109000	GRAY
85X2T, 8534T models only		85X1T, 8532T1, 8533T, 8534T1 models only	
Material: Nylon Finish: Gloss		Material: Nylon Finish: Gloss	

Cap, J80, J81 & J 82 options only

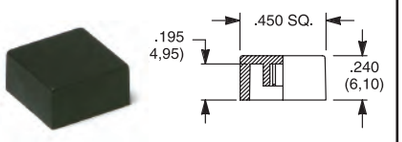

PART NO.

448901000 WHITE
448902000 BLACK
448903000 RED
448909000 GRAY

Material: Nylon
Finish: Gloss or matte

Frame

PART NO.

613302263 BLACK

Material: Nylon
Finish: Matte

Other colors available, consult Customer Service Center.

Third Angle Projection

Dimensions are shown: Inches (mm)
Specifications and dimensions subject to change

8500 Series
Subminiature Pushbutton Switches

AVAILABLE HARDWARE

Frame

PART NO.
615602263 BLACK

Material: Nylon
Finish: Matte

NOTE: Additional nuts, locking rings and lockwashers available separately, see section "Technical Data and Additional Hardware".
Other colors available, consult Customer Service Center.

Frames snap into panel opening and are independent from switch mounting. Accurate positioning of the PC mounted switch relative to the panel opening is necessary to provide proper clearance between actuator and frame. Available in two basic styles and four panel thicknesses .047-.125 in. Material: Nylon. Finish: Matte.

TYPICAL APPLICATION

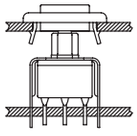

.047" (1,19) PANEL THK.	.062" (1,57) PANEL THK.	.090" (2,29) PANEL THK.	.125" (3,18) PANEL THK.
PART NO.	**PART NO.**	**PART NO.**	**PART NO.**
432502263	432602263	432702263	432802263 BLACK

PANEL MOUNTING

For part numbers
4325xxxxx, 4326xxxxx

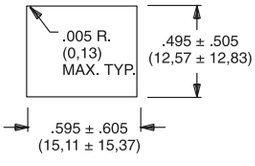

For part numbers
4327xxxxx, 4328xxxxx

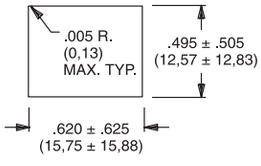

Panel Inserts

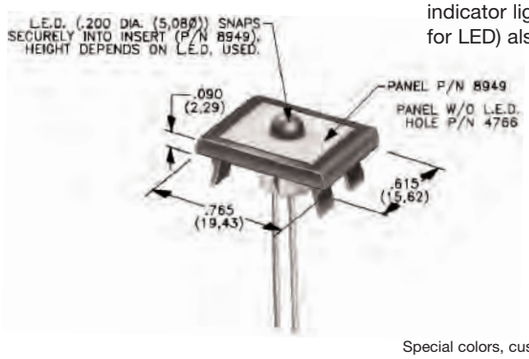

Above frames (part nos. 432XXXXXX) are also available with insert which accepts LED for indicator light assembly. Order insert separately from frame. Blank insert panel (without hole for LED) also available. **LED not included.**

PANEL INSERT WITH HOLE FOR LED	BLANK PANEL INSERT WITHOUT HOLE FOR LED
PART NO.	**PART NO.**
894902000	476602000 BLACK

Special colors, custom markings available, consult Customer Service Center.

LED INFORMATION

Process Information: Soldering to LED leads must be completed within 5 seconds at 500°F (260°C) maximum.
LEDs are not supplied with J82 option. LED snaps into switch frame surrounding actuator and is wired externally.

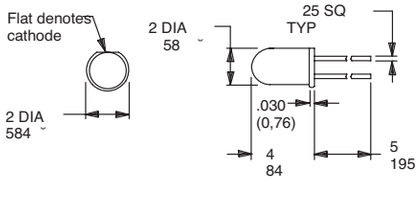

Suggested LED for J82 option
Dimensions for reference only

Third Angle Projection

Dimensions are shown: Inches (mm)
Specifications and dimensions subject to change

KM Series
Subminiature Pushbutton Switches

Features/Benefits

- ***Reliable contact design***
- ***Available with pretravel and overtravel***
- ***RoHS compliant***

Typical Applications

- ***Alarm systems***
- ***Computers***
- ***Detector switch application***

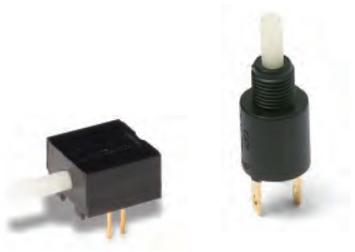

Models Available

Specifications

CONTACT RATING: Q contact material (KM11, KM12 Models): 0.25 AMPS @ 125 V AC or DC (UL); (KM33 Model): 1 AMP @ 125 V AC or 28 V DC. See page A-69 for additional ratings.

ELECTRICAL LIFE: 10,000 actuations min. at full load.

CONTACT RESISTANCE: Below 30 mΩ typ. initial @ 2-4 V DC, 100 mA, for both silver and gold plated contacts.

INSULATION RESISTANCE: $10^9\Omega$ min.

DIELECTRIC STRENGTH: 1,000 Vrms min. @ sea level.

OPERATING TEMPERATURE: –30°C to 85°C.

CAP INSTALLATION FORCE: 10 lbs. max. permissible.

NOTE: Any models supplied with Q or B contact material are RoHS compliant.

NOTE: Specifications and materials listed above are for switches with standard options. For information on specific and custom switches, consult Customer Service Center.

Materials

HOUSING & BUSHING: 6/6 nylon (UL94V-2), black.

ACTUATOR: 6/6 nylon (UL 94V-2), natural. Internal o-ring seal, available on KM11 & KM33 models.

MOVABLE CONTACT: B contact material: Bronze or copper, with gold plate over nickel plate. See page A-69 for additional contact materials.

STATIONARY CONTACTS & TERMINALS: B contact material: Copper, with gold plate over nickel plate. See page A-69 for additional contact materials.

RETURN SPRING: Music wire, phosphor coated.

MOUNTING NUT: Brass, nickel plated.

TERMINAL SEAL: Epoxy.

Build-A-Switch

To order, simply select desired option from each category and place in the appropriate box. Available options are shown and described on pages A-68 and A-70. For additional options not shown in catalog, consult Customer Service Center.

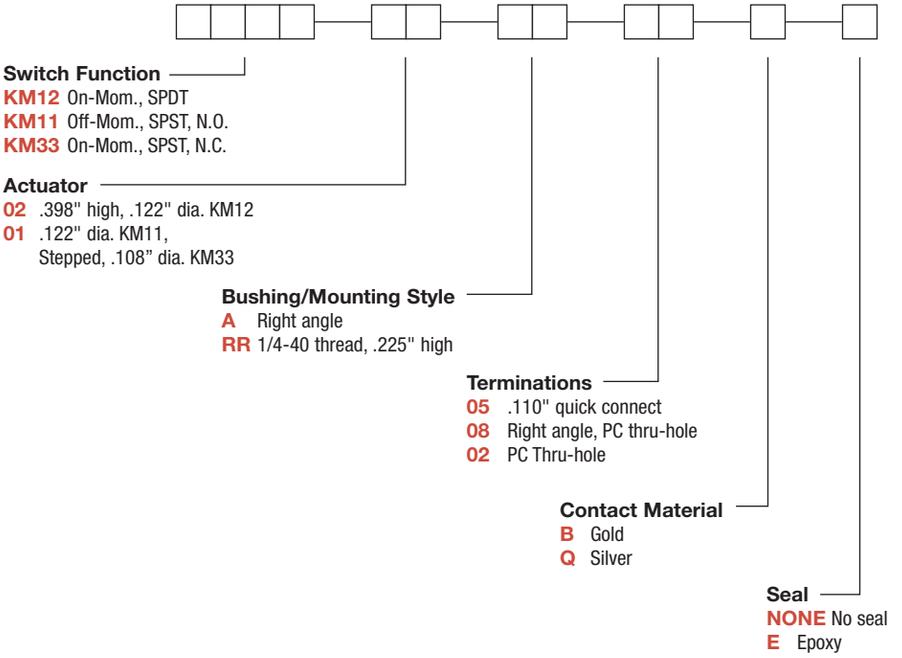

KM Series
Subminiature Pushbutton Switches

SWITCH FUNCTION

NO. POLES	MODEL NO.	SWITCH FUNCTION POS. 1	SWITCH FUNCTION POS. 2	CONNECTED TERMINALS POS. 1	CONNECTED TERMINALS POS. 2	SCHEMATIC
SP	KM11	OFF	MOM.	OPEN	2-1	SPST N.O.
	KM33	ON	MOM.	2-1	OPEN	SPST N.C.

SPST

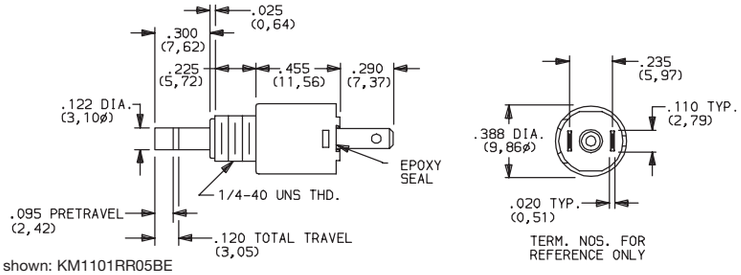

Part number shown: KM1101RR05BE

SP	KM12	ON	MOM.	2-1	4-3	SPDT

SPDT

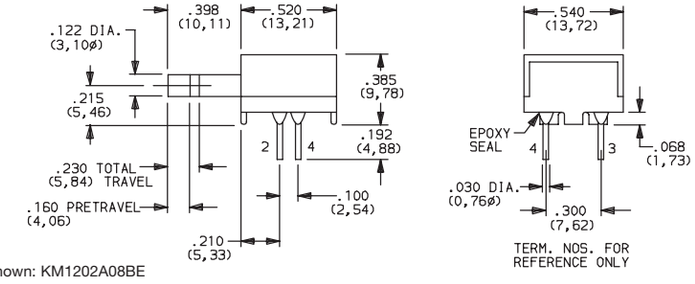

Part number shown: KM1202A08BE

ACTUATOR

02 .398" HIGH, .122" DIA.

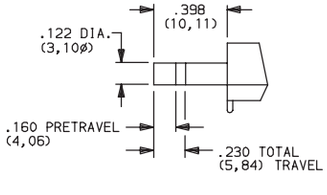

KM12 models only.

01 .122" DIA.

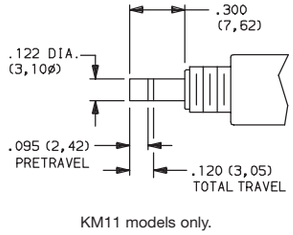

KM11 models only.

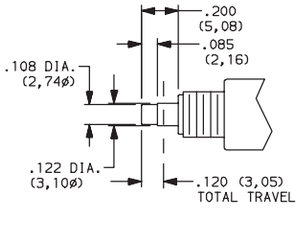

KM33 models only.

NOTE: Caps available for plunger options, see page A-70.

Third Angle Projection

Dimensions are shown: Inches (mm)
Specifications and dimensions subject to change

BUSHING/ MOUNTING STYLE

A RIGHT ANGLE

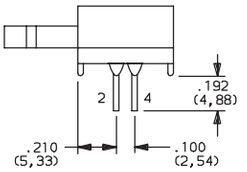

KM12 models only.

RR 1/4-40 THREAD, .225" HIGH

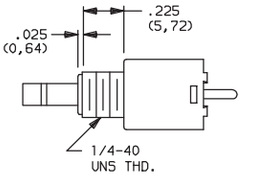

KM11 & KM33 models only.

PANEL MOUNTING

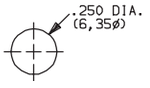

KM11 & KM33 models.

PC MOUNTING

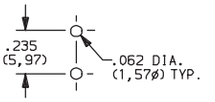

KM11 models only.

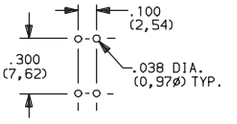

KM12 models only.

TERMINATIONS

05 .110" QUICK CONNECT

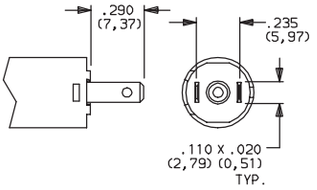

08 RIGHT ANGLE, PC THRU-HOLE

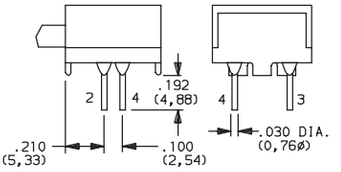

KM12 models only.

02 PC THRU-HOLE

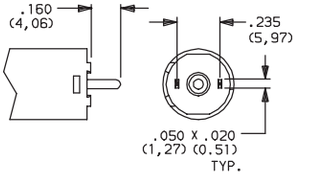

KM11 models only.

CONTACT MATERIAL

OPTION CODE	RoHS COMPLIANT *	RoHS COMPATIBLE *	CONTACT AND TERMINAL MATERIAL	RATINGS	
B	YES	YES	GOLD [1]	LOW LEVEL/DRY CIRCUIT	0.4 VA MAX. @ 20 V AC OR DC MAX.
Q	YES	YES	SILVER [2]	POWER	0.25 AMPS @ 125 V AC OR DC (KM11, KM12) (UL) 1 AMP @ 125 V AC OR 28 V DC (KM33).

* Note: See Technical Data section of this catalog for RoHS compliant and compatible definitions and specifications.

[1] STATIONARY CONTACTS & TERMINALS: Copper, with gold plate over nickel plate.
MOVABLE CONTACT: Phosphor bronze or beryllium copper, with gold plate over nickel plate.

[2] STATIONARY CONTACTS & TERMINALS: Copper, silver plated (standard with all termination options).
MOVABLE CONTACT: Phosphor bronze or beryllium copper, silver plated.

[3] STATIONARY CONTACTS & TERMINALS: Copper, with gold plate over nickel plate over silver plate.
MOVABLE CONTACT: Phosphor bronze or beryllium copper, with gold plate over nickel plate over silver plate.

NOTE: Any models supplied with Q or B contact material are RoHS compliant.

KM11, KM12 models ® when ordered with 'Q' contact material.

SEAL

NONE NO SEAL

E EPOXY SEAL

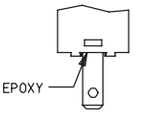

Third Angle Projection

Dimensions are shown: Inches (mm)
Specifications and dimensions subject to change

KM Series
Subminiature Pushbutton Switches

AVAILABLE HARDWARE

Cap, KM33 models

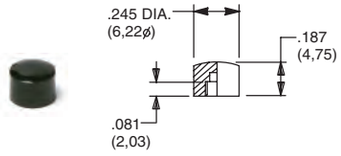

PART NO.

785101000 WHITE
785102000 BLACK
785103000 RED

Material: Nylon
Finish: Gloss

Cap, KM11 and KM12 models

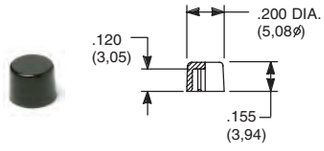

PART NO.

708901000 WHITE
708902000 BLACK
708903000 RED

Material: Nylon
Finish: Gloss

Cap, KM11 and KM12 models

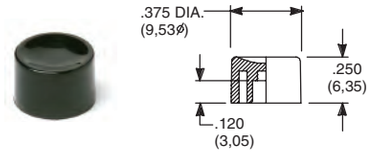

PART NO.

752701000 WHITE
752702000 BLACK
752703000 RED

Material: Nylon
Finish: Gloss

Cap, KM11 and KM12 models

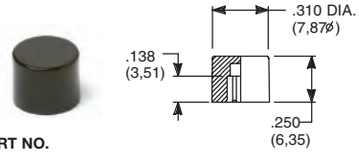

PART NO.

801801000 WHITE
801802000 BLACK
801803000 RED

Material: Nylon
Finish: Gloss

Cap, KM11 models

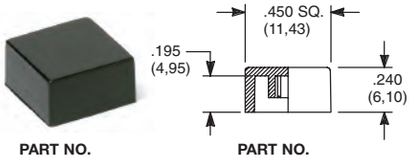

PART NO.

484601000 WHITE
484602000 BLACK
484603000 RED

Material: Nylon
Finish: Gloss

PART NO.

798201000 WHITE
798202263 BLACK
798203000 RED

Material: Nylon
Finish: Matte

NOTE: Other cap colors available, consult Customer Service Center.

Third Angle Projection

Dimensions are shown: Inches (mm)
Specifications and dimensions subject to change

8600 Series
Microminiature Pushbutton Switches

Features/Benefits

- ***Available with overtravel***
- ***Normally closed models available***
- ***Microminiature size ideal for applications where space is limited***
- ***RoHS compliant***

Typical Applications

- ***Detection***
- ***Telecommunications and networking equipment***
- ***Computers and peripherals***

Models Available

Specifications

CONTACT RATING: Q contact material (8631, 8632 Models): 500 mA @ 120 V AC or 28 V DC; 250 mA @ 250 V AC; (8633 Model): 250 mA @ 120 V AC or 28 V DC; 125 mA @ 250 V AC. See page A-73 for additional ratings.

ELECTRICAL LIFE:
8631 and 8633 MODELS: 250,000 actuations at full load.
8632 MODEL: 100,000 actuations at full load.

CONTACT RESISTANCE: Below 30 mΩ typ. initial @ 2-4 V DC, 100 mA, for both silver and gold plated contacts.

INSULATION RESISTANCE: 109 Ω min.

DIELECTRIC STRENGTH: 500 Vrms min. @ sea level.

OPERATING TEMPERATURE: –30°C to 65°C.

SOLDERABILITY: Per MIL-STD-202F method 208D, or EIA RS-186E method 9.

Materials

CASE: Glass filled phenolic or diallyl phthalate (DAP), (UL94V-0).

PLUNGER: Glass filled nylon (UL94V-0), black standard.

BUSHING: Brass, nickel plated.

CONTACTS: Q contact material: Coin silver, silver plated. See page A-73 for additional contact materials.

TERMINALS:
8631, 8632 MODELS: Copper alloy, silver plated.
8633 MODEL: Q contact material: Coin silver.
See page A-73 for additional contact materials.

TERMINAL SEAL:
8633 MODEL: Epoxy.
8631, 8632 MODELS: Terminals insert molded.

HARDWARE: Nut: Brass, nickel plated.

NOTE: Any models supplied with Q, B or G contact material are RoHS compliant.

NOTE: Specifications and materials listed above are for switches with standard options. For information on specific and custom switches, consult Customer Service Center.

Build-A-Switch

To order, simply select desired option from each category and place in the appropriate box. Available options are shown and described on pages A-72 and A-73. For additional options not shown in catalog, consult Customer Service Center.

Switch Function
8631 SPST Off-Mom.
8632 SPST Off-Mom.
8633 SPST On-Mom.

Termination
Z Solder lug
C PC Thru-hole

Contact Material
B Gold
Q Silver
G Gold over silver

Seal
D No epoxy
E Epoxy

Plunger Color
2 Black
3 Red

8600 Series
Microminiature Pushbutton Switches

SWITCH FUNCTION

NO. POLES	MODEL NO.	SWITCH FUNCTION POS. 1	SWITCH FUNCTION POS. 2	TOTAL TRAVEL	ACTUATION FORCE	SCHEMATIC
SP	8631	OFF	MOM.	.040 (1,02) TYP.	5 oz (140g) TYP.	N.O.

SPST

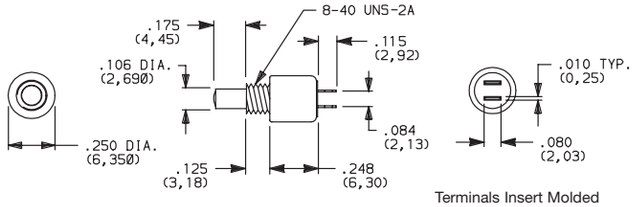

PANEL MOUNTING

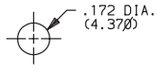

Part number shown: 8631ZQD2

Terminals Insert Molded

NO. POLES	MODEL NO.	SWITCH FUNCTION POS. 1	SWITCH FUNCTION POS. 2	TOTAL TRAVEL	ACTUATION FORCE	SCHEMATIC
SP	8632	OFF	MOM.	.106 (2,69) TYP. with overtravel .024 (0,61) TYP.	6.25 oz (177g) TYP.	N.O. with overtravel

SPST

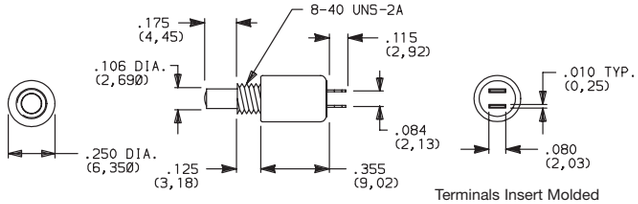

PANEL MOUNTING

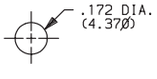

Part number shown: 8632ZQD2

Terminals Insert Molded

NO. POLES	MODEL NO.	SWITCH FUNCTION POS. 1	SWITCH FUNCTION POS. 2	TOTAL TRAVEL	ACTUATION FORCE	SCHEMATIC
SP	8633	ON	MOM.	.048 (1,22) TYP.	5 oz (140g) TYP.	N.C.

SPST

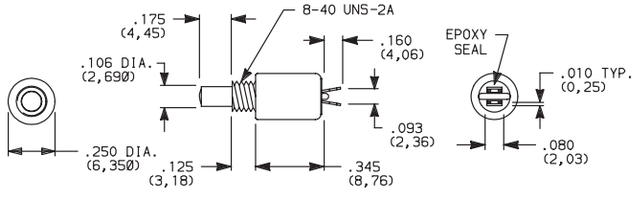

PANEL MOUNTING

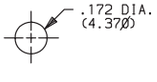

Part number shown: 8633ZQE2

MOM. = Momentary

NOTE: Caps available for plunger options, see page A-73.

TERMINATIONS

Z SOLDER LUG

8631, 8632 models only.

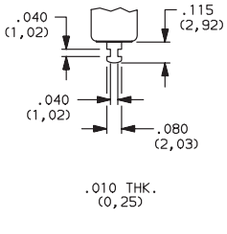

8633 models only.

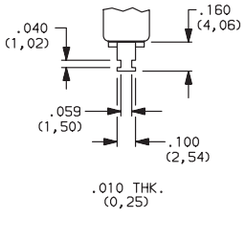

C PC THRU-HOLE

8631, 8632 models only.

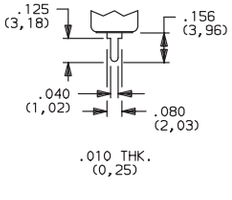

PC MOUNTING

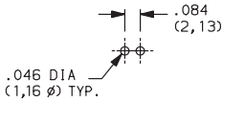

Third Angle Projection

Dimensions are shown: Inches (mm)
Specifications and dimensions subject to change

CONTACT MATERIAL

OPTION CODE	RoHS COMPLIANT *	RoHS COMPATIBLE *	CONTACT MATERIAL	TERMINAL PLATING	RATINGS	
B	YES	YES	GOLD [1]	GOLD [1]	LOW LEVEL/ DRY CIRCUIT	0.4 VA MAX. @ 20 V AC OR DC MAX.
Q	YES	YES	SILVER [4]	SILVER [5]	POWER	8631, 8632 MODELS: 500 mA @ 120 V AC OR 28 V DC; 250 mA @ 250 V AC. 8633 MODELS: 250 mA @ 120 V AC OR 28 V DC; 125 mA @ 250 V AC.
G	YES	YES	GOLD OVER SILVER [4]	GOLD [3]	LOW LEVEL/DRY CIRCUIT OR POWER	0.4 VA MAX @ 20 V AC OR DC MAX. OR 8631, 8632 MODELS: 500 mA @ 120 V AC OR 28 V DC; 250 mA @ 250 V AC. 8633 MODELS: 250 mA @ 120 V AC OR 28 V DC; 125 mA @ 250 V AC.

* Note: See Technical Data section of this catalog for RoHS compliant and compatible definitions and specifications.

[1] CONTACTS & TERMINALS: Copper alloy, with gold plate over nickel plate.
[2] CONTACTS: Coin silver, with gold plate over nickel plate.
[3] TERMINALS: Copper alloy, with gold plate over nickel plate.
8633 model only: Coin silver, with gold plate over nickel plate.
[4] CONTACTS: Coin silver, silver plated.
[5] TERMINALS: Copper alloy, silver plated. 8633 model only: coin silver.

NOTE: Any models supplied with Q, B or G contact material are RoHS compliant.

8631, 8632 models ® with all options when ordered with G or Q contact material.
Q contact material standard with C, Z terminations.

SEAL

D NO EPOXY SEAL

Not available on 8633 model.
Standard on 8631, 8632 models.

E EPOXY SEAL

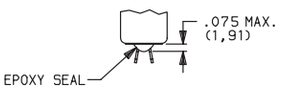

Not available on 8631, 8632 models.
Standard on 8633 model only.

PLUNGER COLOR

OPTION CODE	COLOR
2	BLACK
3	RED

AVAILABLE HARDWARE

Cap

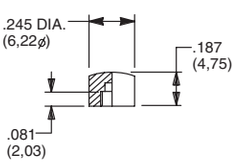

PART NO.

785101000 WHITE
785102000 BLACK
785103000 RED

Material: Nylon
Finish: Gloss

NOTE: Other cap colors available, consult Customer Service Center.

Third Angle Projection

Dimensions are shown: Inches (mm)
Specifications and dimensions subject to change

8700 Series
Overtravel Pushbutton Switches

Features/Benefits

- ***Extended pre-travel or over-travel***
- ***Heavy-duty brass plunger***
- ***Long electrical life — 100K cycles***
- ***RoHS compliant***

Typical Applications

- ***Telecommunications***
- ***High end Instrumentation***
- ***Medical & test equipment***
- ***Detection***

Specifications

CONTACT RATING: Q contact material: 1 AMP @ 120 V AC or 28 V DC. See page A-76 for additional ratings.

ELECTRICAL LIFE: 100,000 actuations at full load.

CONTACT RESISTANCE: Below 30 mΩ typ. Initial @ 2-4 V DC, 100 mA.

INSULATION RESISTANCE: $10^3\Omega$ min.

DIELECTRIC STRENGTH: 1,000 Vrms min. @ sea level.

OPERATING TEMPERATURE: –30°C to 65°C.

NOTE: Any models supplied with Q, or B contact material are RoHS compliant.

NOTE: Specifications and materials listed above are for switches with standard options. For information on specific and custom switches, consult Customer Service Center.

Materials

CASE: Diallyl phthalate (DAP) (UL 94V-0).

PLUNGER:
8731 – .390" brass, nickel plated.
8732 – .390" PBT polyester, black.

BUSHING: brass, nickel plated.

CONTACTS: Q contact material: Coin silver, silver plated. See page A-76 for additional contact materials.

TERMINALS: Q contact material: Copper alloy, silver plated. See page A-76 for additional contact materials.

TERMINAL SEAL: Epoxy.

HARDWARE: Nut: Brass, nickel plated; lockwasher: Steel, bright nickel plate. One mounting nut & lockwasher supplied with all switches.

Build-A-Switch

To order, simply select desired option from each category and place in the appropriate box. Available options are shown and described on pages A-75 and A-76. For additional options not shown in catalog, consult Customer Service Center. All models have epoxy terminal seal and are compatible with all “bottom-wash” PCB cleaning methods.

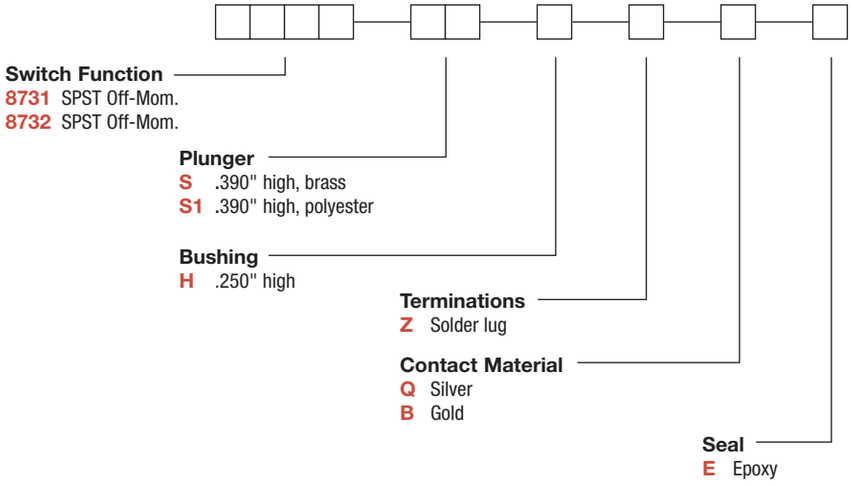

SWITCH FUNCTION

NO. POLES	MODEL NO.	SWITCH FUNCTION POS. 1	SWITCH FUNCTION POS. 2	TOTAL TRAVEL		ACTUATION FORCE	SCHEMATIC
SP	8731	OFF	MOM.	.390 (9,91) TYP.	with overtravel .311 TYP.	4.7 oz TYP.	N.O. with overtravel SPST

SPST

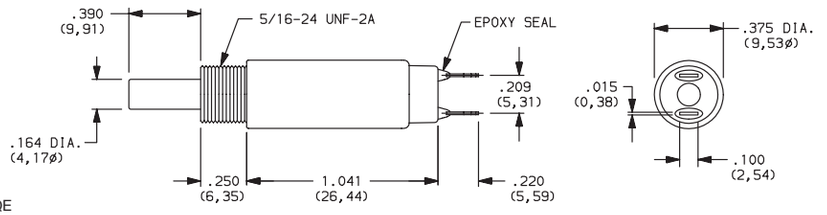

Part number shown: 8731SHZQE

SP	8732	OFF	MOM.	.390 (9,91) TYP.	with overtravel .350 TYP.	2.2 oz TYP.	N.O. with overtravel SPST

SPST

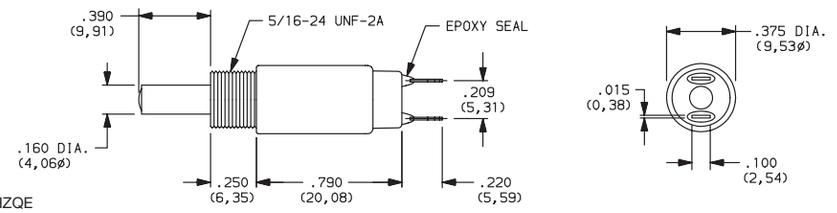

Part number shown: 8732S1HZQE

MOM. = Momentary

PLUNGER

S .390" HIGH, BRASS

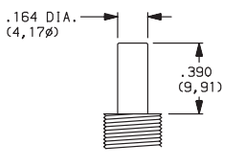

Available with 8731 model only.

S1 .390" HIGH, PBT POLYESTER

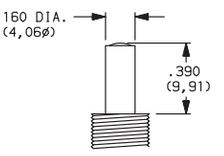

Available with 8732 model only.

BUSHING

H .250" HIGH

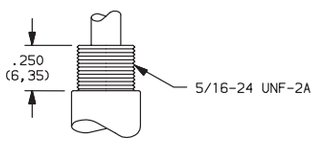

PANEL MOUNTING

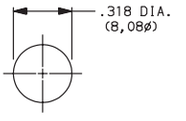

Third Angle Projection

Dimensions are shown: Inches (mm)
Specifications and dimensions subject to change

8700 Series
Overtravel Pushbutton Switches

TERMINATIONS

Z SOLDER LUG

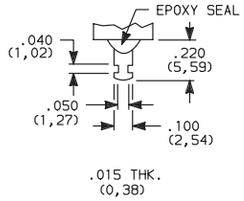

CONTACT MATERIAL

OPTION CODE	RoHS COMPLIANT *	RoHS COMPATIBLE *	CONTACT MATERIAL	TERMINAL PLATING	RATINGS	
Q	YES	YES	SILVER	SILVER	POWER	1 AMP @ 125 V AC OR 28 V DC.
B	YES	YES	GOLD	GOLD	LOW LEVEL/DRY CIRCUIT	0.4 VA MAX. @ 20 V AC OR DC MAX.

* Note: See Technical Data section of this catalog for RoHS compliant and compatible definition and specifications.

NOTE: Any models supplied with Q, or B contact material are RoHS compliant.

SEAL

E EPOXY SEAL

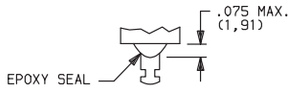

Third Angle Projection

Dimensions are shown: Inches (mm)
Specifications and dimensions subject to change

GP Series
Sealed Ultraminiature Pushbutton Switches

Features/Benefits

- ***Ultraminiature design saves space***
- ***Process compatible, withstands most soldering and washing processes***
- ***Thru-hole and surface mount models available***
- ***Sealed construction—internal o-ring and epoxy base***
- ***RoHS compliant***

Typical Applications

- ***Telecommunications and network equipment***
- ***Computers and peripheral products***
- ***Instrumentation***
- ***Medical Applications***

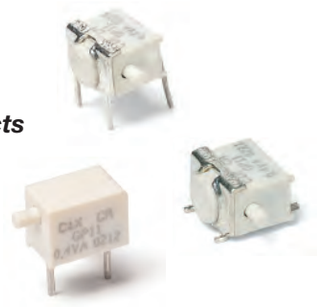

Specifications

CONTACT RATING: 0.4 VA max. @ 20 V AC or DC max.

MECHANICAL & ELECTRICAL LIFE: 40,000 make-and-break cycles at full load.

CONTACT RESISTANCE: Below 50 mΩ typ. initial @ 2-4 V DC, 100 mA.

INSULATION RESISTANCE: $10^9\Omega$ min.

DIELECTRIC STRENGTH: 500 Vrms min. @ sea level.

OPERATING TEMPERATURE: –40°C to 85°C.

SOLDERABILITY: Per MIL-STD-202F method 208D, or EIA RS-186E method 9 (1 hour steam aging).

DEGREE OF PROTECTION: IP57; Protection against harmful dust deposit, full-scale voltage protection, temporary immersion.

PACKAGING: Surface mount switches standard in anti-static tape and reel packaging per EIA 481-3, see page A-80 for drawings and reel information. Thru-Hole parts are shipped in trays.

All models are RoHS compliant and compliant.

Materials

HOUSING & BASE: Glass filled nylon 4/6, flame retardant, heat stabilized (UL 94V-0).

ACTUATOR: Glass filled nylon 4/6, flame retardant (UL 94V-0) with standard internal o-ring seal.

SWITCH SUPPORT: Brass, tin plated.

MOVABLE CONTACT: Copper alloy, with gold plate over nickel plate.

STATIONARY CONTACTS Copper alloy, with gold plate over nickel plate.

TERMINALS: Copper alloy, with gold flash over nickel plate.

TERMINAL SEAL: Epoxy/Urethane. All terminals insert molded.

NOTE: Any models supplied with B contact material are RoHS compliant and compatible.

NOTE: Materials listed above are general specifications. Specifications available for specific and custom switches, consult Customer Service Center.

CAUTION: PC mounting layouts and pads as shown are designed to be compatible with the latest equipment and reflow techniques. Care should be taken in the design and location of PC lands to suit individual needs. Orientation relative to reflow direction may significantly impact solder joint integrity.

How To Order

Complete part numbers for GP Series Sealed Ultraminiature Pushbutton Switches are shown on pages A-78 thru A-80.

PART NUMBER	SWITCH FUNCTION POS.1	SWITCH FUNCTION POS. 2	SCHEMATIC
GP11MCBE	OFF	MOM.	1 3 SPST
Conn. Terms.	OPEN	1-3	
GP12MCBE	ON	MOM.	2 (COMM) NC 1 3 NO SPDT
Conn. Terms.	2-1	2-3	

MOM. = Momentary

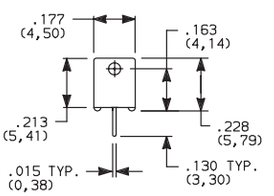

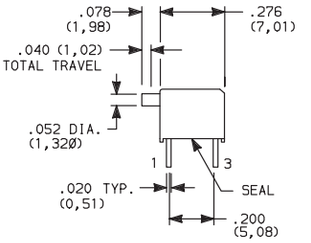

Terminal nos. for reference only.

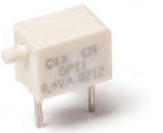

GP11MCBE
SPST

PC MOUNTING

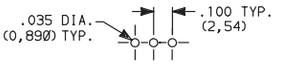

GP11– omit center hole.

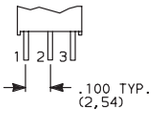

GP12 Model

Dimensions are shown: Inches (mm)
Specifications and dimensions subject to change

GP Series
Sealed Ultraminiature Pushbutton Switches

GP11MABE
SPST

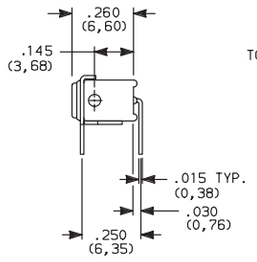

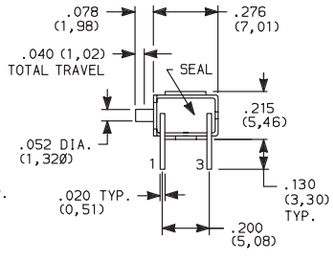

Terminal nos.
for reference only.

PC MOUNTING

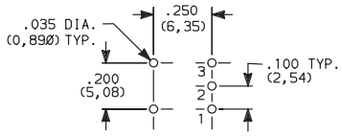

GP11– omit hole 2.

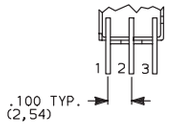

GP12 Model

PART NUMBER	SWITCH FUNCTION POS.1	SWITCH FUNCTION POS. 2	SCHEMATIC
GP11MABE	OFF	MOM.	SPST
Conn. Terms.	OPEN	1-3	
GP12MABE	ON	MOM.	SPDT
Conn. Terms.	2-1	2-3	

MOM. = Momentary

GP11MSABE
SPST

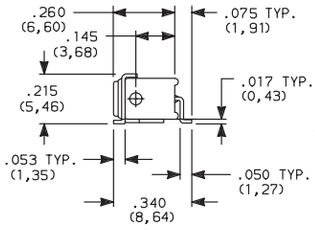

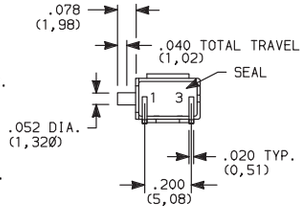

Terminal nos.
for reference only.

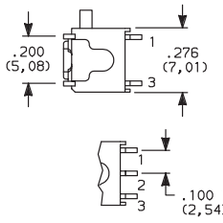

GP12 Model

PC MOUNTING

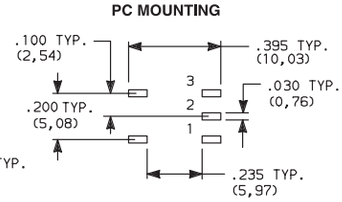

GP11– omit pad 2.

PART NUMBER	SWITCH FUNCTION POS.1	SWITCH FUNCTION POS. 2	SCHEMATIC
GP11MSABE	OFF	MOM.	SPST
Conn. Terms.	OPEN	1-3	
GP12MSABE	ON	MOM.	SPDT
Conn. Terms.	2-1	2-3	

MOM. = Momentary

GP11MSA1BE
SPST

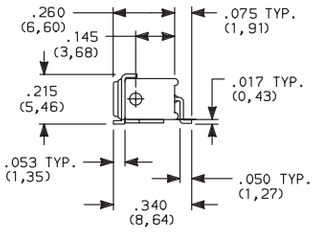

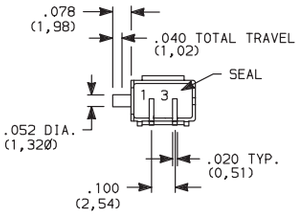

Terminal nos.
for reference only.

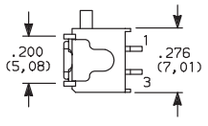

PC MOUNTING

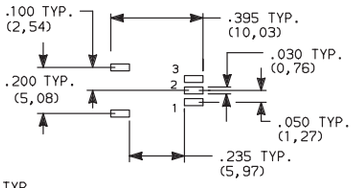

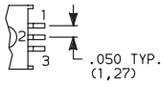

GP12 Model

GP11– omit pad 2.

PART NUMBER	SWITCH FUNCTION POS.1	SWITCH FUNCTION POS. 2	SCHEMATIC
GP11MSA1BE	OFF	MOM.	SPST
Conn. Terms.	OPEN	1-3	
GP12MSA1BE	ON	MOM.	SPDT
Conn. Terms.	2-1	2-3	

MOM. = Momentary

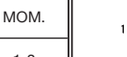

Third Angle
Projection

Dimensions are shown: Inches (mm)
Specifications and dimensions subject to change

PART NUMBER	SWITCH FUNCTION POS.1	SWITCH FUNCTION POS. 2	SCHEMATIC
GP12MSCBE	ON	MOM.	2 (COMM) NC 1 3 NO SPDT
Conn. Terms.	2-1	2-3	

MOM. = Momentary

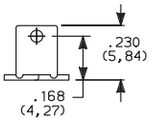

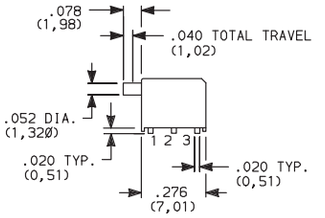

Terminal nos.
for reference only.

GP12MSCBE
SPDT

PC MOUNTING

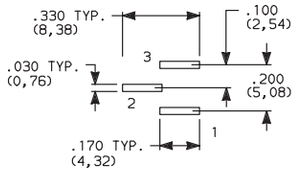

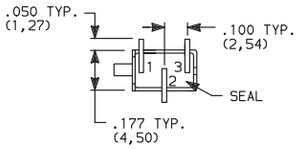

NOTE: Recommended for infrequent use applications only
For increased switch mounting strength, order, SV1 termination style with support bracket (see below).

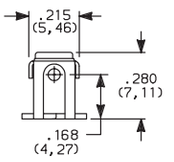

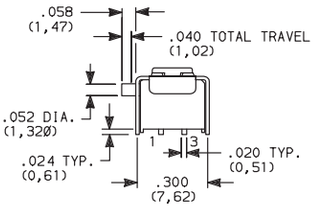

GP11MSV1BE
SPST

PART NUMBER	SWITCH FUNCTION POS.1	SWITCH FUNCTION POS. 2	SCHEMATIC
GP11MSV1BE	OFF	MOM.	1 3 SPST
Conn. Terms.	OPEN	1-3	
GP12MSV1BE	ON	MOM.	2 (COMM) NC 1 3 NO SPDT
Conn. Terms.	2-1	2-3	

MOM. = Momentary

PC MOUNTING
GP11 MODELS

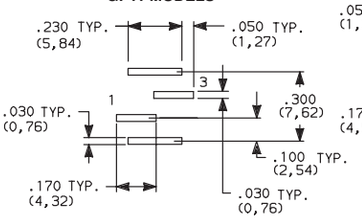

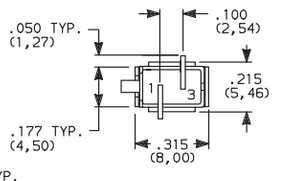

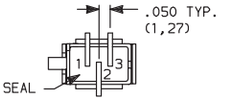

GP12 Model

Terminal nos.
for reference only.

PC MOUNTING
GP12 Models

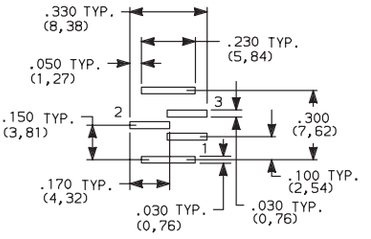

Third Angle
Projection

Dimensions are shown: Inches (mm)
Specifications and dimensions subject to change

GP Series
Sealed Ultraminiature Pushbutton Switches

TAPE & REEL

For part numbers GP11MSV1BE, GP12MSV1BE

REEL INFORMATION	
OUTSIDE DIAMETER	13.00 (330,0)
PILOT HOLE	.512 (13,0)
QUANTITY PER REEL	600

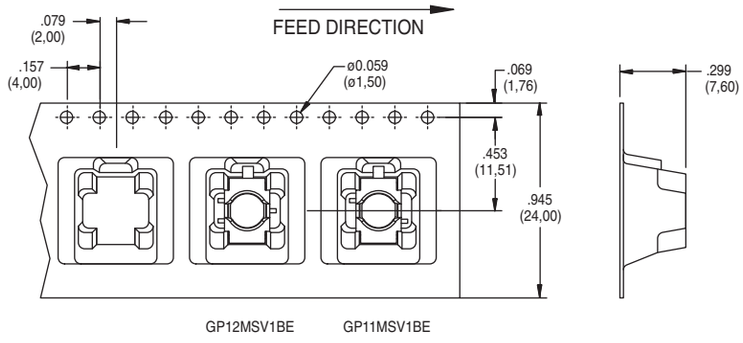

For part numbers GPXXSA1BE, GPXXMSABE

REEL INFORMATION	
OUTSIDE DIAMETER	13.00 (330,0)
PILOT HOLE	.512 (13,0)
QUANTITY PER REEL	600

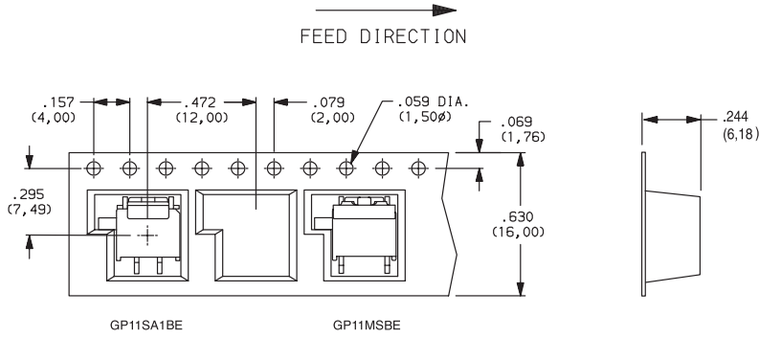

For part numbers GP12MSCBE

REEL INFORMATION	
OUTSIDE DIAMETER	13.00 (330,0)
PILOT HOLE	.512 (13,0)
QUANTITY PER REEL	600

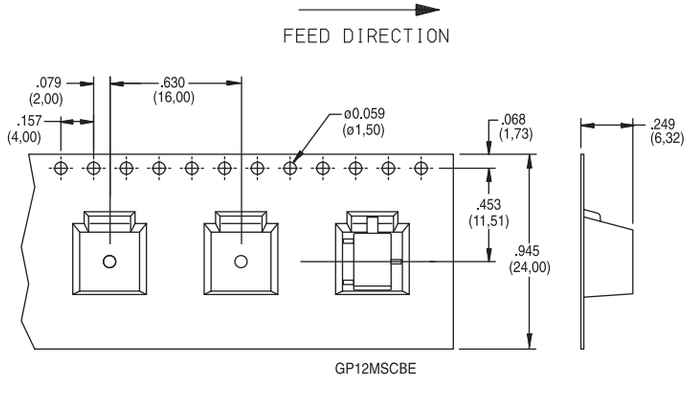

Third Angle Projection

Dimensions are shown: Inches (mm)
Specifications and dimensions subject to change

PN Series
Alternate & Momentary Action Pushbutton Switches

Features/Benefits

- ***Momentary or locking action***
- ***Different actuation forces for customized feel***
- ***Low cost, reliable contact design***
- ***Single and double pole options***
- ***RoHS compliant***

Typical Applications

- ***Computers and peripherals***
- ***Instrumentation and measurement equipment***
- ***Non-power, on-off switch applications***

Specifications

CONTACT RATING: 0.2 AMP @ 30 V DC max.
ELECTRICAL LIFE: 10,000 make-and-break cycles at full load.
MECHANICAL LIFE: 10,000 on/off cycles.
CONTACT RESISTANCE: 30 mΩ max. initial
INSULATION RESISTANCE: 100 MΩ min.
DIELECTRIC STRENGTH: 500 V AC min.
OPERATING/STORAGE TEMPERATURES: –10°C to 60°C.
PACKAGING: Switches are supplied in anti-static trays.

Materials

FRAME: Tin plated steel.
ACTUATOR: PA 66 black.
BASE: Phenolic resin.
TERMINALS: Silver plated brass.
MOVABLE CONTACTS: Silver plated phosphor bronze.
RETURN SPRING: SWC
DETENT SPRING: Phosphor bronze.
DETENT SPRING PLATE: Phosphor bronze.
RETURN SPRING RETAINER RING: Nickel plated steel.
TERMINAL SEAL: Epoxy.

Build-A-Switch

To order, simply select desired option from each category and place in the appropriate box. For additional options not shown in catalog, consult Customer Service Center.

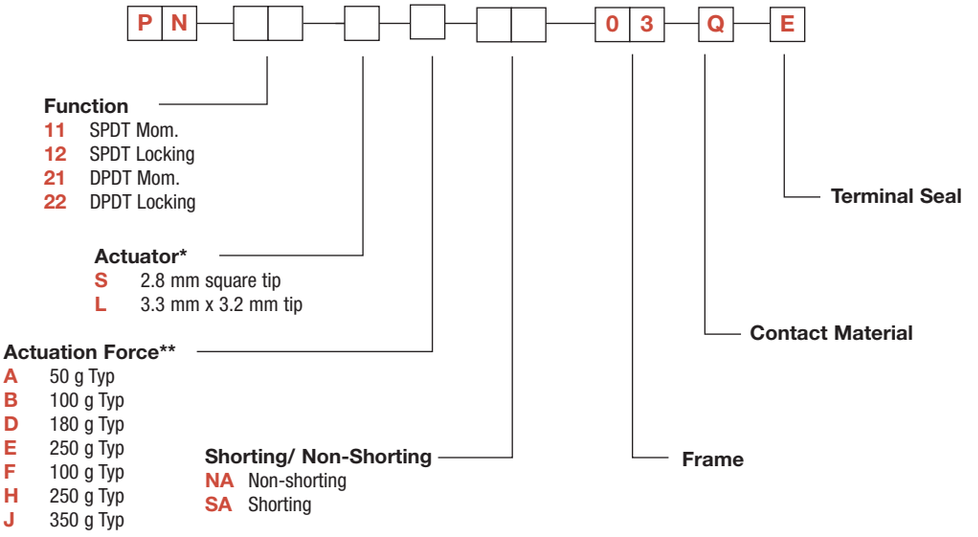

* Note - The switch body style dimenions differ for each of these 3 groupings

"S" actuator available for PN 11 & PN 12 options

"S" actuator available for PN 21 & PN 22 options

"L" actuator available for PN 21 & PN 22 options

** Actuation Force "A" only available with PN11 with "S" actuator

PN 11 & PN 21 available with Acuation Force "B", "D", "E", "F", "H", "J"

PN 12 & PN 22 available with Actuation Force "D", "E", "H", "J"

Full travel

PN Series
Alternate & Momentary Action Pushbutton Switches

PN 11 SPDT Mom.
PN 12 SPDT Locking

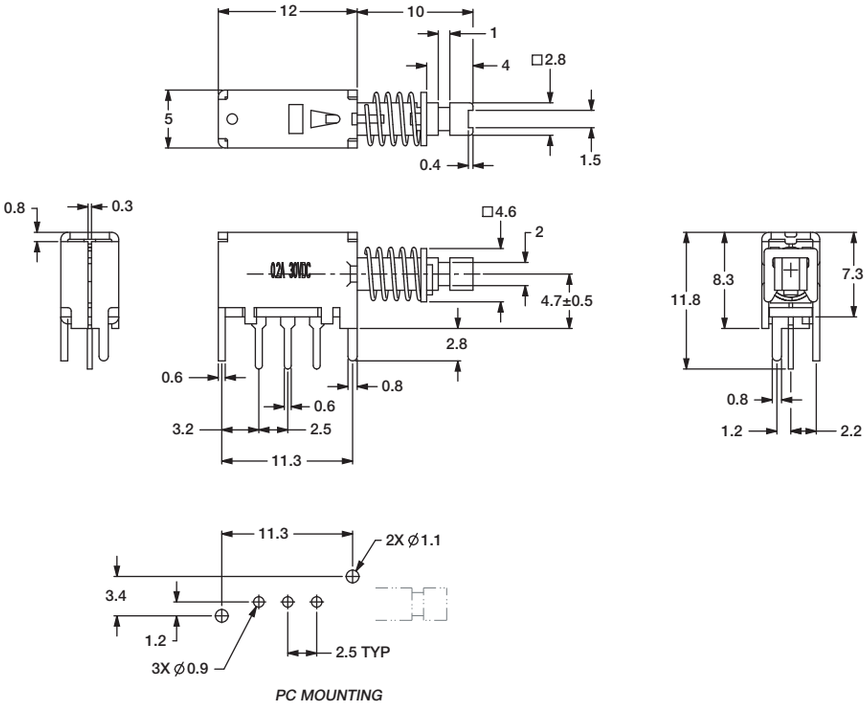

PC MOUNTING

PN 21 DPDT Mom. with "S" Actuator
PN 22 DPDT Locking with "S" Actuator

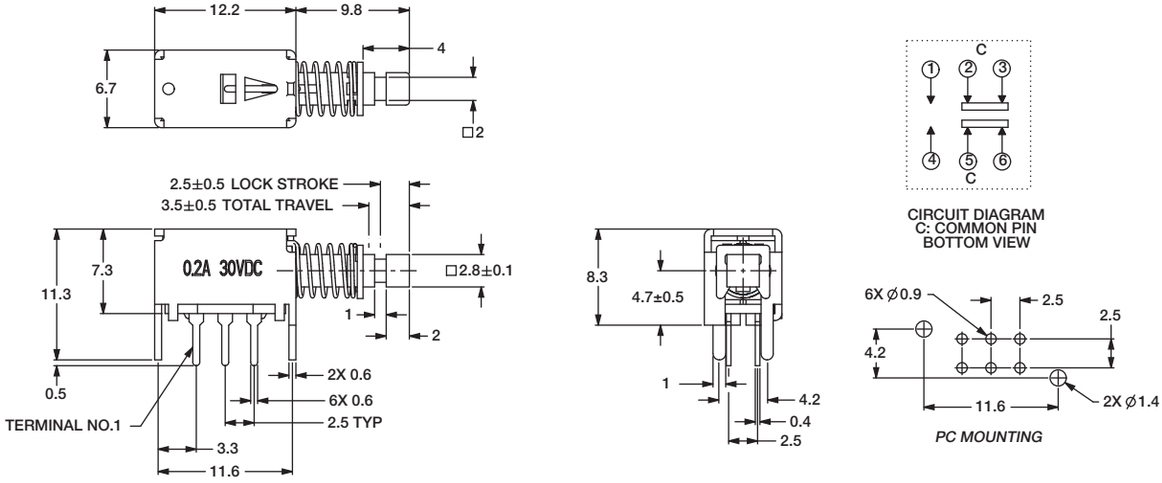

PC MOUNTING

Third Angle Projection

Dimensions are shown: mm
Specifications and dimensions subject to change

PN 21 DPDT Mom. with "L" Actuator
PN 22 DPDT Locking with "L" Actuator

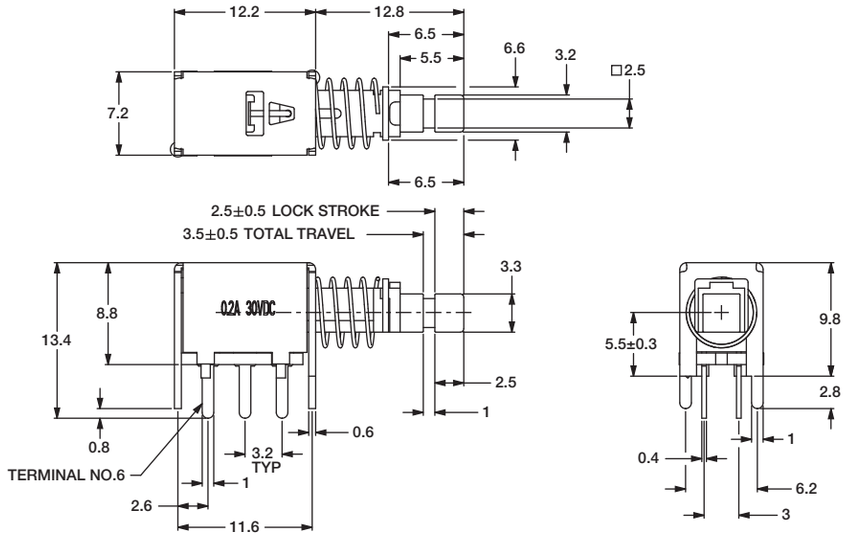

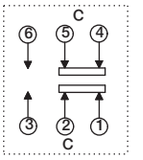

CIRCUIT DIAGRAM
C: COMMON PIN
BOTTOM VIEW

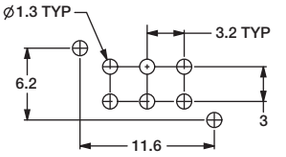

PC MOUNTING

BUTTONS MUST BE ORDERED SEPARATELY. SHIPPED IN BULK.

PE

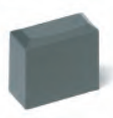

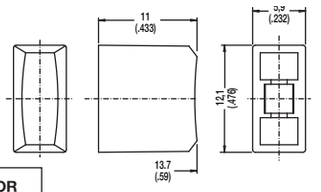

OPTION CODE	COLOR
RD	Red
GY	Gray
BK	Black
WH	White

PE and PV buttons fit "L" actuators

PV

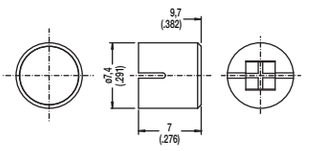

Indexed

G001A Black
G001G Gray
G001I Ivory
G001R Red

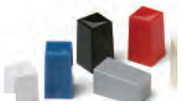

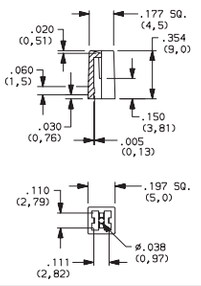

Rectangular

G002A Black
G002G Gray
G002I Ivory
G002R Red

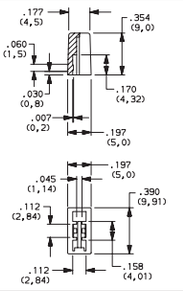

Round

G003A Black
G003G Gray
G003I Ivory
G003R Red

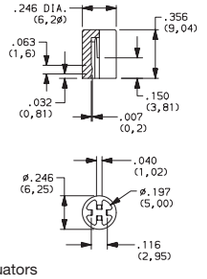

G001, G002, G003 and G004 buttons fit "S" actuators

Square

G004A Black
G004G Gray
G004I Ivory
G004R Red

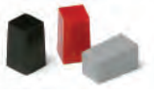

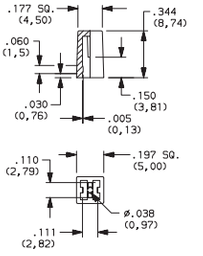

Third Angle Projection

Dimensions are shown: Inches (mm)
Specifications and dimensions subject to change

PHB Series
Short Stroke Pushbutton Switches

Features/Benefits

- ***Momentary or latching action***
- ***Low cost, reliable contact design***
- ***2 & 4 pole configurations***
- ***Sealed contacts***
- ***Optional buttons***
- ***RoHS compliant***

Typical Applications

- ***Computers and peripherals***
- ***Instrumentation and measurement equipment***
- ***Non-power, on-off switch applications***

Specifications

RATING: 1 A @ 15 V DC

DIELECTRIC STRENGTH (50 Hz/1 min.): 500 V DC between terminals or between terminals and frame for 1 minute

OPERATING LIFE: 10,000 cycles at rated load

CONTACT RESISTANCE: 20 m Ωohms initial

INSULATION RESISTANCE: 100 M Ωohms

TOTAL TRAVEL/LATCHING TRAVEL: 2.5mm (± 0.5 mm) / 1.5mm (± 0.5 mm) to latch EE option (push-push)

OPERATING FORCE:
2U option: 170 grams ± 100 grams (1.67 ± 0.98N)
4U option: 230 grams ± 100 grams (2.26 ± 0.98N)

OPERATING TEMPERATURE: -10˚C to 60˚C

BOUNCE TIME: ≤10 ms

SEALING: Sealed contacts.

PACKAGING: Switches; PHB2 models: 84 pcs per tray; PHB4 models 72 pcs per tray
Optional Caps; Bulk bag - 100 caps per bag

Materials

FIXED TERMINAL: Brass, silver plated

MOVABLE CONTACT: Phosphor bronze, silver plated

COVER: PA 66 Black

COVER TO BASE RETAINING CLIP: POM

ACTUATOR: POM

RETURN SPRING: Stainless steel

SPRING RETAINING RING: Steel, nickel plate

BASE: Phenolic resin

TERMINAL SEAL: Epoxy.

NOTE: Specifications and materials listed above are for switches with standard options. For information on specific and custom switches, consult Customer Service Center.

Build-A-Switch

To order, simply select desired option from each category and place in the appropriate box. For additional options not shown in catalog, consult Customer Service Center.

Switch

P H B — [ ][ ] — [ ][ ] — [ ][ ] — 1 A

Contact Arrangement
2U 2 Changeovers
4U 4 Changeovers

Mechanical Function
OA Momentary
EE Push-push

Termination
TS Straight
SN Kinked (plug in)

Electrical Rating
1A 1 Amp / 15 VDC

Caps (order separately)

[ ][ ][ ][ ][ ]

INDEXED	COLOR
G001A	BLACK
G001G	GRAY
G0011	IVORY
G001R	RED

RECTANGULAR	COLOR
G002A	BLACK
G002G	GRAY
G0021	IVORY
G002R	RED

ROUND	COLOR
G003A	BLACK
G003G	GRAY
G0031	IVORY
G003R	RED

SQUARE	COLOR
G004A	BLACK
G004G	GRAY
G0041	IVORY
G004R	RED

Dimensions are shown: Inches (mm)
Specifications and dimensions subject to change

TERMINATION

TS STRAIGHT

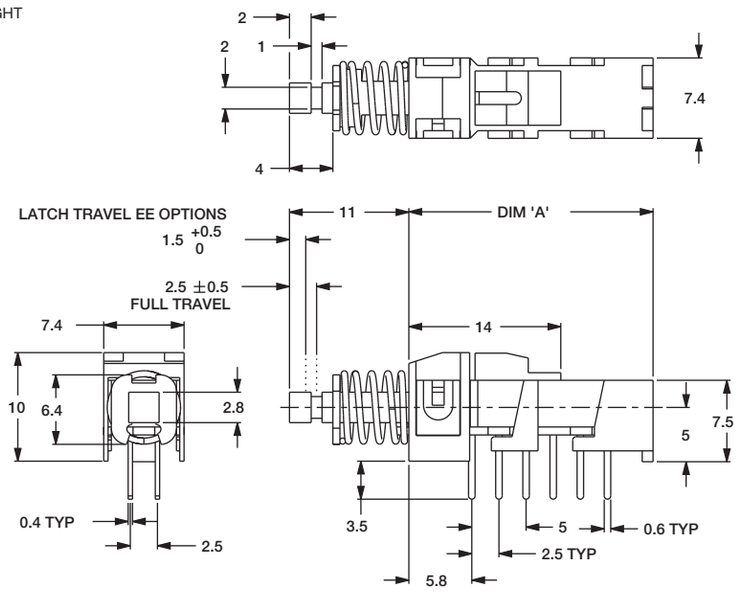

POLES	MODEL NO.	DIM 'A'	ACTION
4	PHB4UEE1A	22,5	PUSH/PUSH
	PHB4U0A1A	22,5	MOMENTARY
2	PHB2UEE1A	15,0	PUSH/PUSH
	PHB2U0A1A	15,0	MOMENTARY

SN KINKED (PLUG IN)

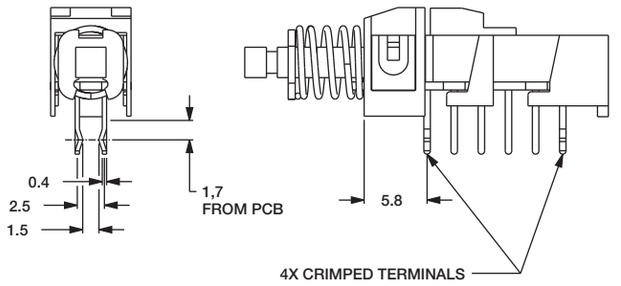

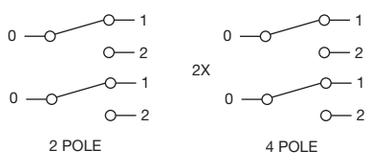

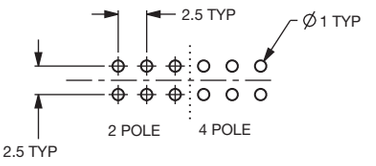

Third Angle Projection

Dimensions are shown: mm
Specifications and dimensions subject to change

PHB Series
Short Stroke Pushbutton Switches

CAPS

Indexed

G001A Black
G001G Gray
G001I Ivory
G001R Red

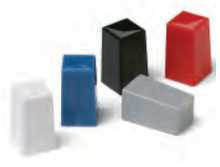

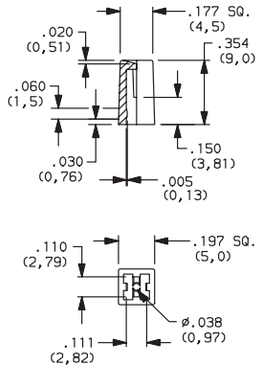

Rectangular

G002A Black
G002G Gray
G002I Ivory
G002R Red

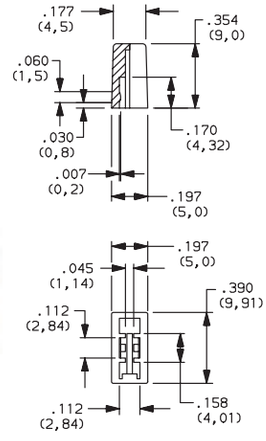

Round

G003A Black
G003G Gray
G003I Ivory
G003R Red

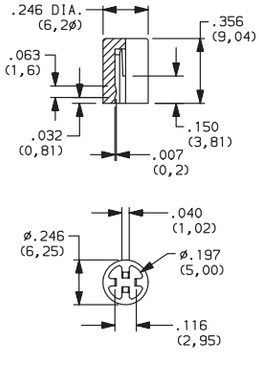

Square

G004A Black
G004G Gray
G004I Ivory
G004R Red

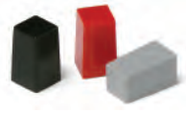

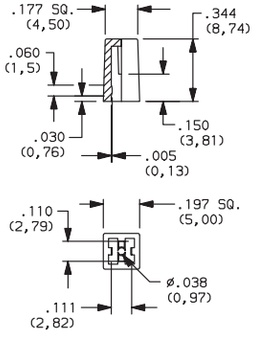

Third Angle Projection

Dimensions are shown: Inches (mm)
Specifications and dimensions subject to change

Features/Benefits

- *Up to 10 poles per module*
- *Various contact terminals*
- *Various mounting & switch ganging configurations*
- *Mechanical indicator buttons*
- *RoHS compliant*

Typical Applications

- *Audio selection*
- *Digital equipment interface*
- *Medical equipment interface*

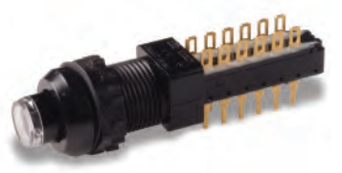

Specifications

SWITCHING POWER: F module max. AC/DC: Silver: 50 VA/15W, Gold: 1 VA/300 mW.

SWITCHING VOLTAGE: F module max. AC/DC: Silver: 125/30V, Gold: 50/30 V.

SWITCHING CURRENT: F module max. AC/DC: Silver: 0.5A/0.5A, Gold: 0.04A/0.01A.

CARRYING CURRENT: Max at du = 20C: Silver: < 2A, Gold: <0.5A.

DIELECTRIC STRENGTH (50 Hz, 1 min.): Chassis/contact: ^1500V Between contacts: ^1500V.

OPERATING LIFE "OA/EE" (24V/200mA): >10^5 operations "GR": >3.5 x 104 operations.

CONTACT RESISTANCE: Initial: Typical %10 mΩ, max. 20 mΩ After operating life: %100 mΩ

INSULATION RESISTANCE: ^10^9 Ω between open contacts, ^10^9 Ω between chassis and contacts.

CAPACITANCE (at f = 10 kHz): %0.7 pF between 2 contacts.

TOTAL TRAVEL/LATCHING TRAVEL: 4.7mm/3.3mm (.185 inch/ .130 inch).

All models and options are RoHS compliant and compatible.

NOTE: All models and options are RoHS compliant and compatible.

NOTE: Specifications and materials listed above are for switches with standard options. For information on specific and custom switches, consult Customer Service Center.

TYPICAL F OPERATING FORCE: 2U: 6.5N (650 grams); 4U: 6.5N (650 grams); 6U: 7.5N (750 grams); 8U: 9.0N (900 grams); 10U: 9.0N (900 grams).

EUROPEAN TYPICAL SF OPERATING FORCE: 2U: 3.5N±0.5N (350 grams±100 grams); 4U: 5N±1N (500 grams±100 grams); 6U: 6.5N±1N (650 grams±100 grams); 8U: 9.0N±1N (900 grams±100 grams).

OPERATING TEMPERATURE RANGE: -40˚C to 70˚C.

Materials

HOUSING: Polycarbonate UL 94V-0 or polyester UL 94V-0.

ACTUATOR: Polyester UL 94V-0.

MOVABLE CONTACTS: Bimetal brass, silver plated, gold plate over nickel.

STATIONARY CONTACTS & TERMINALS: Brass, silver plated, gold plated.

TERMINAL BOARD: Polyester UL 94V-0.

RETURN SPRING: Music wire.

TERMINAL SEAL: RTV adhesive sealant.

CHASSIS: Steel.

LOCKOUT PIN: Steel.

BLOCKERS: Steel.

Build-A-Switch

To order, simply select desired option from each category and place in the appropriate box. Available options are shown and described on pages A-88 thru A-95. For additional options not shown in catalog, consult Customer Service Center.

If requesting only a switch, select either a North American or European switch as noted below. Chassis and buttons are sold separately. If multiple stations are selected, we will assume all switches are the same unless noted otherwise.

North American Order Code - Switch Only

Designation
- **F** F Series
- **FLT** Light touch F series
- **ZF** Central mounted F series

Contact Arrangement
- **2U** 2PDT
- **4U** 4PDT
- **6U** 6PDT
- **8U** SPDT
- **10U** 10PDT

Mechanical Function
- **OA** Momentary
- **EE** Alternate (push-push)
- **GR** Interlock
- **AOR** Central release
- **OASP** Momentary with lockout
- **GRSP** Interlock with lockout

Terminal Sealing
- **(NONE)** None
- **TB** Top/bottom

Terminal Style
- **(NONE)** Solder lugs & PC pins
- **01A** Cut solder lugs
- **01B** Cut PC pins, for other configurations, consult factory

Electrical Function
- **(NONE)** BBM Break-Before-Make
- **M** MBB (special) Make-Before-Break

Contact Material
- **(NONE)** Silver, AG
- **AU** Gold

Dress nut*
*Central mounted F series only

- **(NONE)** No dress nut
- **B** Black
- **C** Chrome

F Series
Pushbutton Switches

European Order Code - Switch Only

Designation
- **SF** F Series
- **ZF** Central mounted F series

Contact Arrangement
- **2U** 2PDT
- **4U** 4PDT
- **6U** 6PDT
- **8U** SPDT

Mechanical Function
- **OA** Momentary
- **EE** Alternate (push-push)
- **GR** Interlock

Terminal Style
- **(NONE)** Solder lugs & PC pins
- **LB** Cut solder lugs
- **PB** Cut PC pins, for other configurations, consult factory

Electrical Function
- **(NONE)** BBM

Contact Material
- **(NONE)** Silver, AG
- **P** Gold

Dress nut*
*Central mounted F series only

- **(NONE)** No dress nut
- **B** Black
- **C** Chrome

*Minimum order quantities apply.

Order Code - Buttons

Solid Buttons

Style
- **F01** FMR
- **F02** FG*
- **F12** FSC
- **F13** FSD
- **F14** FU12
- **F15** FSB
- **F16** FE
- **F19** FA
- **F21** F001

Button Color
- **01** Black
- **02** White
- **03** Red
- **04** Light gray

*Button options for central mounting configurations, use 'FG' for central mount with chrome dress nut, use 'FA200' for central mount with black dress nut.

Mechanical Indicator Buttons

Style
- **F01** FA100
- **F02** FA101
- **F07** FA120
- **F08** FA201
- **F11** FA200*

Shell Color
- **01** Black

Out Position Color
- **01** Black

In Position Color
- **02** White
- **06** Yellow
- **07** Blue
- **08** Green
- **12** Orange

BUTTON REMOVAL

A button of a push-push switch should only be removed in the "OFF" non-latching position.

Order Code - Chassis

To order a switch with chassis, create the switch part number listed above and add the Chassis part number configurator information at the end of the part number.

Note: We do not guarantee or recommend interlocking beyond 10 stations.

C

No. of Stations
- **01 thru 23** Comes with standard .094 (2,4mm) mounting holes Note: Single station chassis available with special mounting configurations, consult factory.

Spacing between Stations
- **00** Single station
- **10** 10mm
- **12.5** 12.5mm
- **15** 15mm
- **17.5** 17.5mm
- **20** 20mm

Special Acknowledgements
See note

*Minimum order quantities apply.

SWITCHES WITH STANDARD OPTIONS

F2UEE

CONTACT ARRANGEMENT	LENGTH DIM 'L'
2U	0.827 (21,00)
4U	1.300 (33,00)
6U	1.770 (45,00)
8U	2.240 (57,00)
10U	2.720 (69,00)

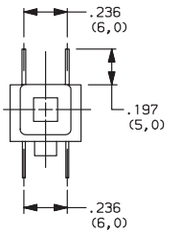

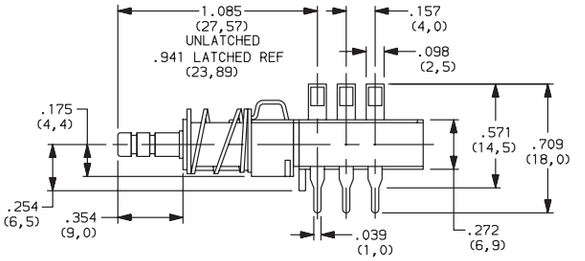

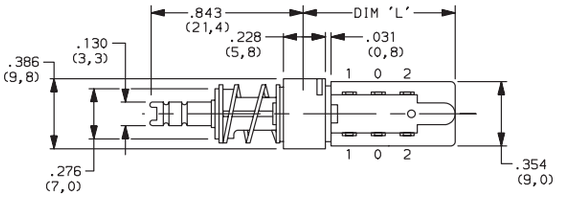

ZF2UEEBF11010108

CONTACT ARRANGEMENT	LENGTH DIM 'L'
2U	0.827 (21,00)
4U	1.300 (33,00)
6U	1.770 (45,00)
8U	2.240 (57,00)
10U	2.720 (69,00)

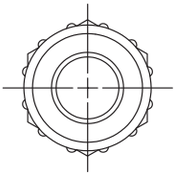

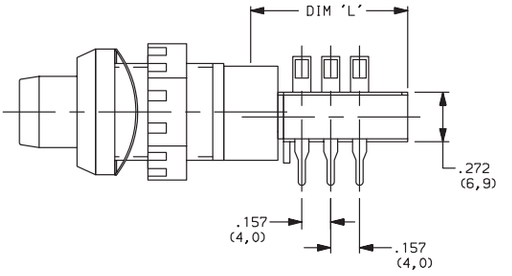

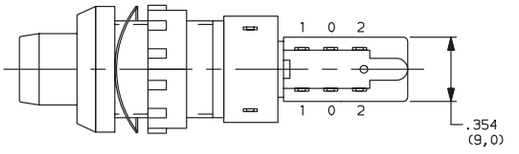

DESIGNATION

Designation, North America

F F Series
FLT Light touch F series
ZF Central mounted F series

Designation, Europe

SF F Series
ZF Central mounted F series

Third Angle Projection

Dimensions are shown: Inches (mm)
Specifications and dimensions subject to change

F Series
Pushbutton Switches

CONTACT ARRANGEMENT

OPTION CODE	NO. OF POLES	SCHEMATIC
2U	2PDT	
4U	4PDT	2X
6U	6PDT	3X
8U	8PDT	4X
10U	10PDT	5X

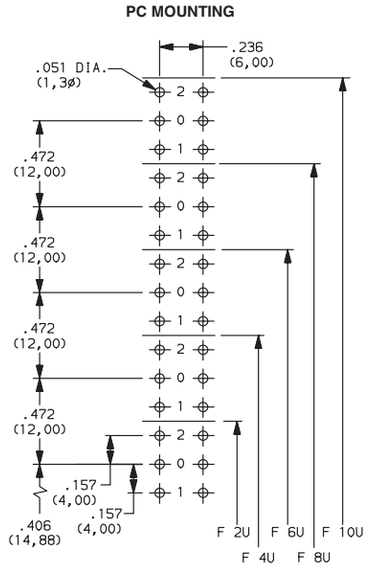

MECHANICAL FUNCTION

North America

OPTION CODE	FUNCTION
OA	Momentary
EE	Alternate (push-push)
GR	Interlock
AOR	Central release
OASP	Momentary with lockout
GRSP	Interlock with lockout

Europe

OPTION CODE	FUNCTION
OA	Momentary
EE	Alternate (push-push)
GR	Interlock

TERMINAL SEALING

(NONE) NO SEAL

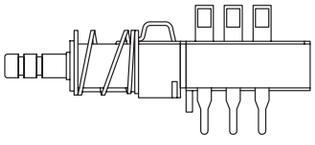

F2UEE shown in example above.

TB TOP & BOTTOM

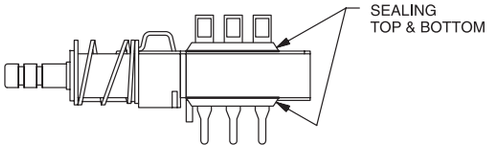

NOTE: Available for North America only

Third Angle Projection

Dimensions are shown: Inches (mm)
Specifications and dimensions subject to change

TERMINAL STYLE

(NONE) SOLDER LUGS & PC PINS

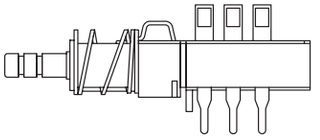

01A CUT SOLDER LUGS (North America)

LB CUT SOLDER LUGS (Europe)

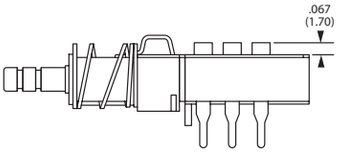

01B CUT PC PINS (North America)

PB CUT PC PINS (Europe)

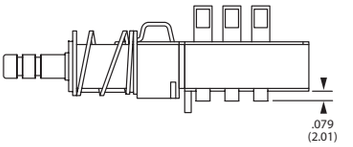

ELECTRICAL FUNCTION

OPTION CODE	FUNCTION
(NONE)	BBM Non-shorting
M	MBB Shorting (North America only)

CONTACT MATERIAL

NORTH AMERICA OPTION CODE	EUROPE OPTION CODE	RoHS COMPLIANT *	RoHS COMPATIBLE *	MATERIAL	RATING
(NONE)	(NONE)	YES	YES	SILVER, AG	50 VA/15 W; 125/30 V; 0.5/0.5 A
AU	P	YES	YES	GOLD	1 VA/300mW; 50/30 V; 0.04 A/0.01 A

* Note: See Technical Data section of this catalog for RoHS compliant and compatible definitions and specifications.

DRESS NUT

(NONE) NO DRESS NUT FOR F & F/LT DESIGNATIONS

B BLACK

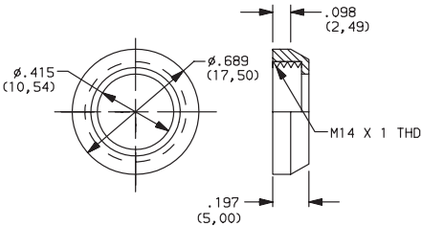

PANEL CUTOUT

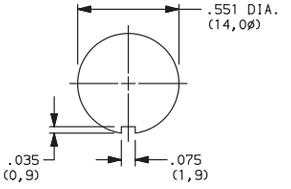

NOTE: Available with ZF designation and FA200 buttons.

C CHROME

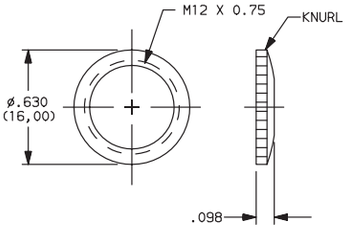

PANEL CUTOUT

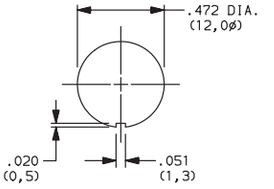

NOTE: Available with ZF designation and FG button.

Third Angle Projection

Dimensions are shown: Inches (mm)
Specifications and dimensions subject to change

F Series
Pushbutton Switches

SOLID BUTTON

COLOR
STYLE

STYLE

F01 FMR

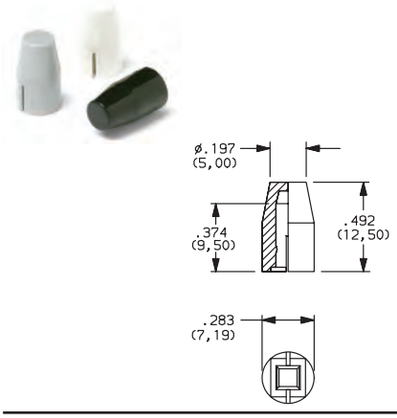

F02 FG

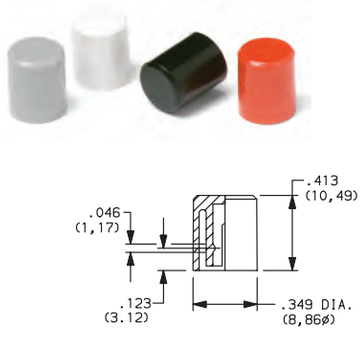

F12 FSC

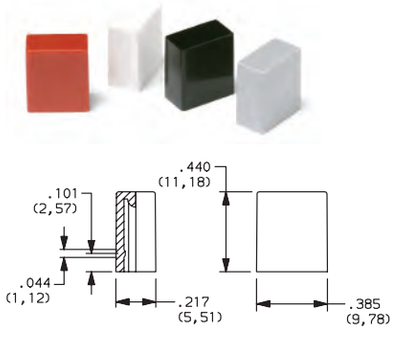

F13 FSD

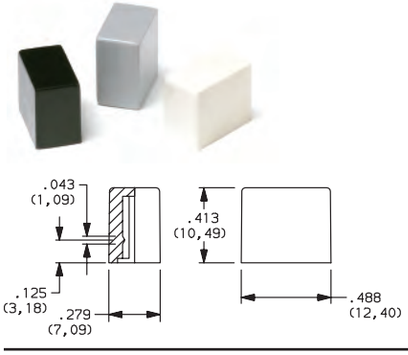

F14 FU12

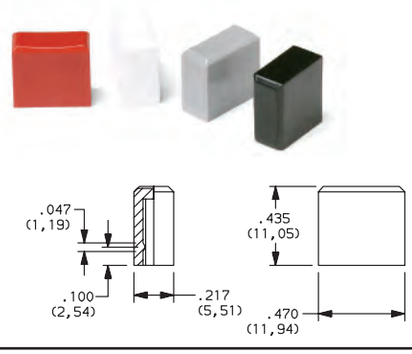

F15 FSB

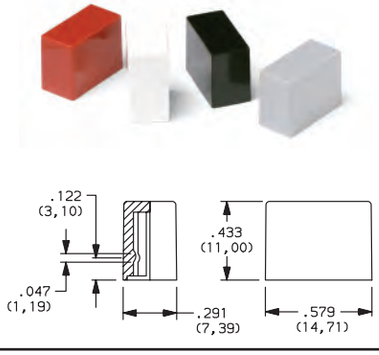

F16 FE

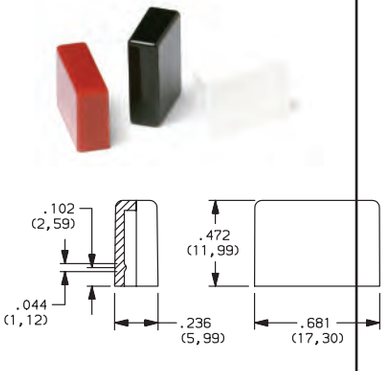

F19 FA

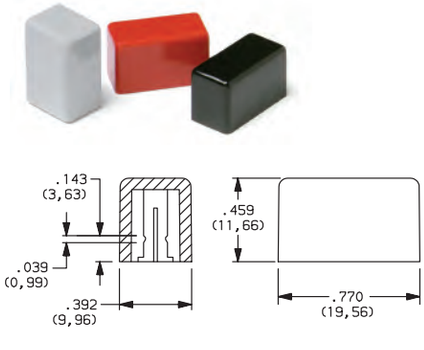

F21 F001

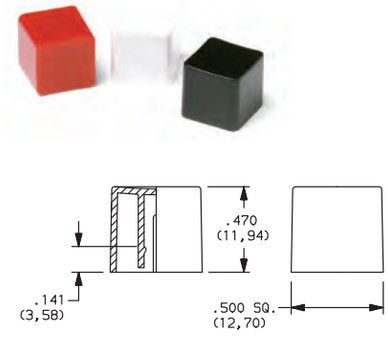

OPTION CODE	COLOR
01	BLACK
02	WHITE
03	RED
04	LT. GRAY

Dimensions are shown: Inches (mm)
Specifications and dimensions subject to change

MECHANICAL BUTTON

SHELL COLOR | IN POSITION COLOR
STYLE | OUT POSITION COLOR

STYLE

F01 FA100

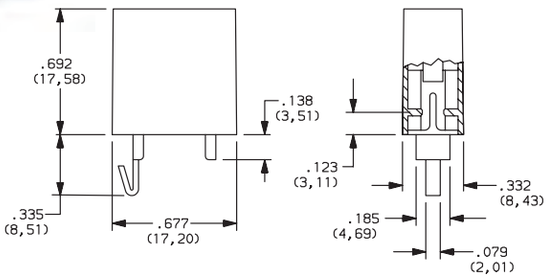

F02 FA101

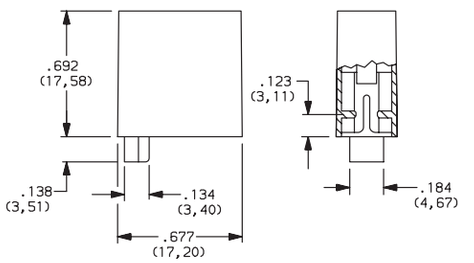

F07 FA120

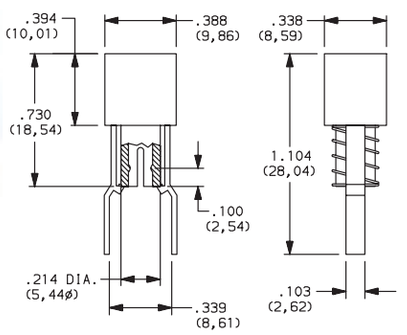

F08 FA201

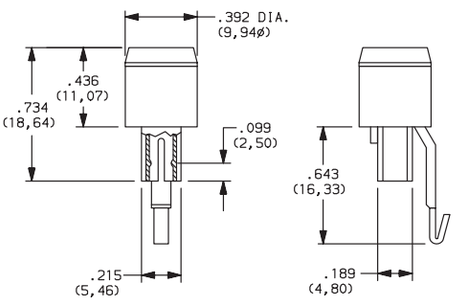

F11 FA200

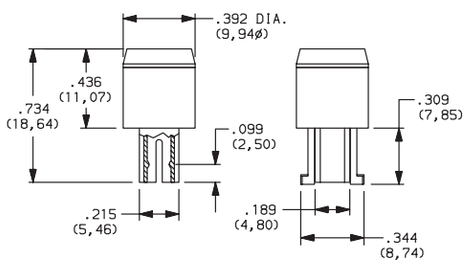

SHELL COLOR

01 BLACK

OUT POSITION COLOR

01 BLACK

IN POSITION COLOR

OPTION CODE	COLOR
02	WHITE
06	YELLOW
07	BLUE
08	GREEN
12	ORANGE

Dimensions are shown: Inches (mm)
Specifications and dimensions subject to change

F Series
Pushbutton Switches

CHASSIS

SPACING

NO. OF STATIONS

NUMBER OF STATIONS

C00 Thru C10 Comes with standard 0.094 (2,44mm) mounting holes

NOTE: Single station chassis available with mounting configurations, consult factory.

SPACING

00 SINGLE STATION

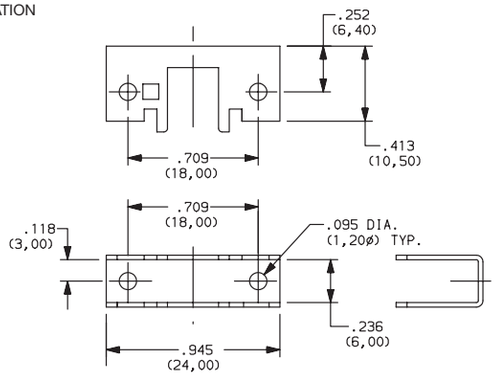

10 10mm

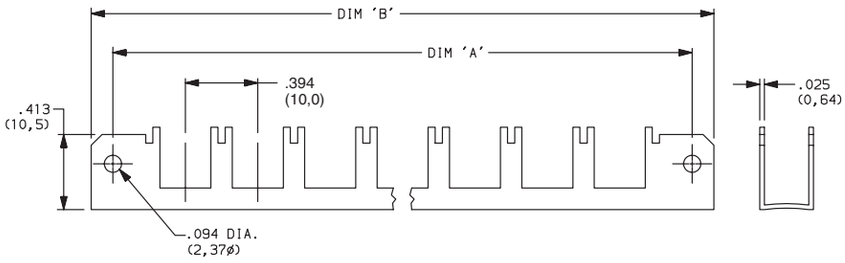

No. of Stations	Dim. 'A'	Dim. 'B'	Tolerance
2	1.182 (30,02)	1.418 (36,02)	0.005
3	1.575 (40,01)	1.811 (46,00)	0.010
4	1.969 (50,01)	2.205 (56,01)	0.010
5	2.363 (60,02)	2.599 (66,01)	0.010
6	2.757 (70,03)	2.993 (76,02)	0.015
7	3.150 (80,01)	3.386 (86,00)	0.015
8	3.544 (90,02)	3.780 (96,01)	0.015
9	3.938 (100,03)	4.174 (106,02)	0.015
10	4.331 (110,01)	4.567 (116,00)	0.015

12.5 12.5mm

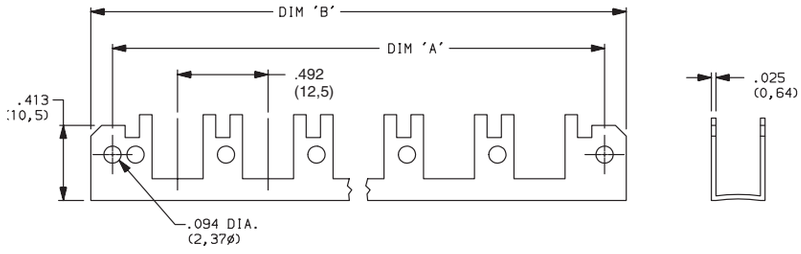

No. of Stations	Dim. 'A'	Dim. 'B'	Tolerance
2	1.200 (30,48)	1.436 (36,47)	0.005
3	1.692 (42,98)	1.928 (48,97)	0.010
4	2.184 (55,47)	2.420 (61,47)	0.010
5	2.676 (67,97)	2.912 (73,96)	0.010
6	3.169 (80,49)	3.405 (86,49)	0.015
7	3.661 (92,99)	3.897 (98,98)	0.015
8	4.153 (105,49)	4.389 (111,48)	0.015
9	4.645 (117,98)	4.881 (123,98)	0.015
10	5.137 (130,48)	5.373 (136,47)	0.015

Third Angle Projection

Dimensions are shown: Inches (mm)
Specifications and dimensions subject to change

CHASSIS

SPACING

NO. OF STATIONS

SPACING

15 15mm

No. of Stations	Dim. 'A'	Dim. 'B'	Tolerance
2	1.374 (34,90)	1.615 (41,02)	0.005
3	1.969 (50,01)	2.205 (56,01)	0.010
4	2.560 (65,02)	2.796 (71,02)	0.010
5	3.150 (80,01)	3.386 (86,00)	0.010
6	3.741 (95,02)	3.977 (101,02)	0.015
7	4.332 (110,03)	4.568 (116,03)	0.015
8	4.922 (125,02)	5.158 (131,01)	0.015
9	5.513 (140,03)	5.749 (146,02)	0.015
10	6.103 (155,02)	6.339 (161,01)	0.015

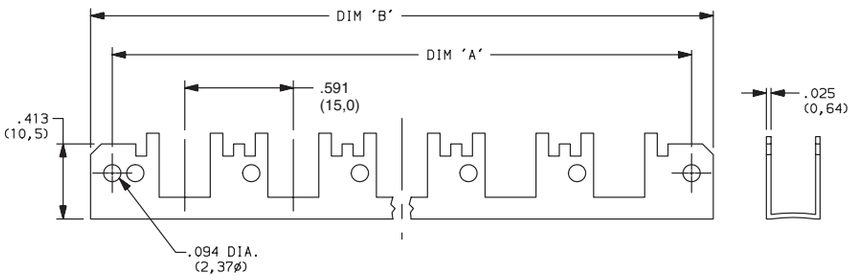

17.5 17.5mm

No. of Stations	Dim. 'A'	Dim. 'B'	Tolerance
2	1.477 (37,52)	1.713 (43,51)	0.005
3	2.166 (55,02)	2.402 (61,01)	0.010
4	2.855 (75,52)	3.091 (78.51)	0.010
5	3.544 (90,02)	3.780 (96,01)	0.010
6	4.233 (107,52)	4.469 (113,51)	0.015
7	4.922 (125,02)	5.158 (131,01)	0.015
8	5.611 (142,52)	5.847 (148.51)	0.015
9	6.300 (160,02)	6.536 (166,01)	0.015
10	6.989 (177,52)	7.225 (183,52)	0.015

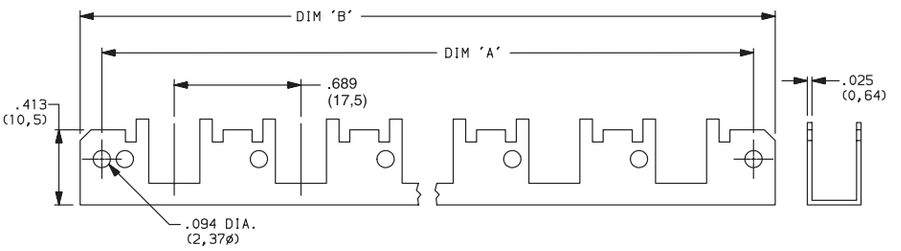

20 20mm

No. of Stations	Dim. 'A'	Dim. 'B'	Tolerance
2	1.575 (40,01)	1.811 (46,00)	0.005
3	2.363 (60,02)	2.599 (66,01)	0.010
4	3.150 (80,01)	3.386 (86,00)	0.010
5	3.938 (100,03)	4.174 (106,02)	0.010
6	4.725 (120,02)	4.961 (126,01)	0.015
7	5.512 (140,00)	5.748 (146,00)	0.015
8	6.300 (160,02)	6.536 (166,01)	0.015
9	7.087 (180,01)	7.323 (186,00)	0.015
10	7.875 (200,03)	8.111 (206,02)	0.015

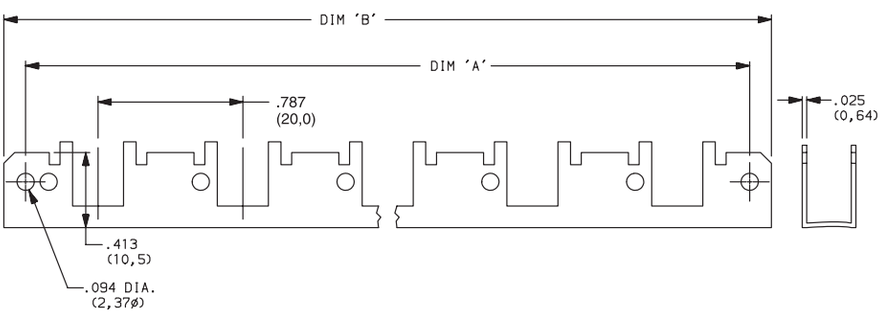

Third Angle Projection

Dimensions are shown: Inches (mm)
Specifications and dimensions subject to change

NE-18 Series
Mains / Power Switches

Features/Benefits

- ***Chassis or panel mount***
- ***Various buttons***
- ***Various contact configurations***
- ***RoHS compliant***

Typical Applications

- ***Mains/power switching***
- ***Consumer electronics***
- ***Audio equipment***
- ***Digital products***

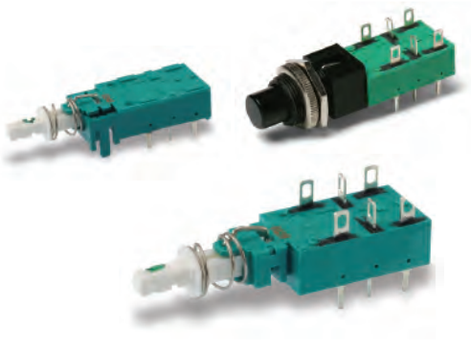

UL61058-1

Specifications

ELECTRICAL RATING:

NE18 Series:

8A GP, 125 VAC, 50/60 Hz, 1E4, T70

6A GP, 250 VAC, 50/60 Hz, 1E4, T70

6(4)A RM, 250 VAC, 50/60 Hz, 1E4, T70

6/48A RC, 250 VAC, 50/60 Hz, 1E4, T70

1RA, 100 VDC, 1E4, T70

8RA, 30VDC, 1E4, T70

NE18CTII Series:

4A GP, 250 VAC, 50/60 Hz, 1E4, T70

4/48A RC, 250 VAC, 50/60 Hz, 1E4, T70

1RA, 100 VDC, 1E4, T70

4RA, 30VDC, 1E4, T70

DIELECTRIC STRENGTH (50 Hz, 1 min.): 2000 V

OPERATING LIFE AT MAX. LOAD AND AT MAX. INRUSH CURRENT: ^10^4 operations[5])

CONTACT RESISTANCE: Initial: 50mΩ; After 10^4 operations: 70mΩ.

INSULATION RESISTANCE: ^10^{12} Ωchassis – nearest contact; ^10^{12} Ωmains contact – mains contact; ^10^{12} Ωmains contact – mains contact after 10^4 operations.

LOW VOLTAGE CONTACT:

SWITCHING POWER MAX.: 12W

SWITCHING VOLTAGE MAX.: 24V

SWITCHING CURRENT MAX.: 0.5A

TOTAL TRAVEL: 4.7mm (.185 inch)

LATCHING TRAVEL: 3.3mm (.130 inch)

OPERATING FORCE: Without auxiliary low voltage contacts: NE18: 7N (700 grams); NE18CTII: 9.5N (950 grams).

With auxiliary low voltage contacts: NE18: 8N (800 grams); NE18CTII: 11N (1100 grams).

SEALING: Dust proof.

Materials

HOUSING, ACTUATOR & TERMINAL BOARD: Thermoplastic polyester (UL 94V-0).

MOVABLE CONTACT: Silver nickel alloy, silver plated.

FIXED CONTACTS: Silver nickel alloy, silver plated.

COMMON CONTACTS & TERMINALS: Copper alloy, silver plated.

RETURN SPRING: Music wire.

NOTE: All models arer RoHS compliant and compatible.

NOTE: Specifications and materials listed above are for switches with standard options. For information on specific and custom switches, consult Customer Service Center.

Build-A-Switch

To order, simply select desired option from each category and place in the appropriate box. Available options are shown and described on pages A-97 thru A-104. For additional options not shown in catalog, consult Customer Service Center.

If requesting only a switch, select the switch as noted below. Buttons are sold separately.

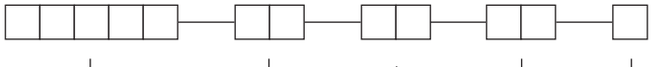

Designation
NE18 NE1B
ZNE18 Cental mounted NE1B

Contact Arrangement
NE18 code # - see list

Mechanical Function
OA Momentary
EE Alternate (push-push)

Single Station Chassis
01 With .094 mounting holes
(NONE) No chassis
02 With 4-40 tapped mounting holes
03 Special chassis (consult factory)

Dress nut*
*Central mounted
ZNE18 series only
(NONE) No dress nut
B Black
C Chrome

Dimensions are shown: Inches (mm)
Specifications and dimensions subject to change

Order Code - Buttons

Solid Buttons

Style
- **F01** FMR
- **F02** FG*
- **F12** FSC
- **F13** FSD
- **F14** FU12
- **F15** FSB
- **F16** FE
- **F19** FA
- **F21** F001

Button Color
- **01** Black
- **02** White
- **03** Red
- **04** Light gray

Mechanical Indicator Buttons

Style
- **F01** FA100
- **F02** FA101
- **F07** FA120
- **F08** FA201
- **F11** FA200*

Shell Color
- **01** Black

Out Position Color
- **01** Black

In Position Color
- **02** White
- **06** Yellow
- **07** Blue
- **08** Green
- **12** Orange

*Button options for central mounting configurations, use 'FG' for central mount with chrome dress nut, use 'FA200' for central mount with black dress nut.

BUTTON REMOVAL

A button of a push-push switch should only be removed in the "OFF" non-latching position.

DESIGNATION & SWITCHES WITH STANDARD OPTIONS

NE1838EE

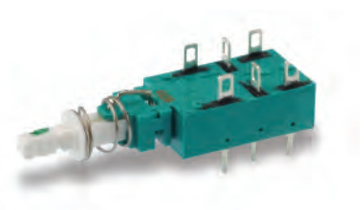

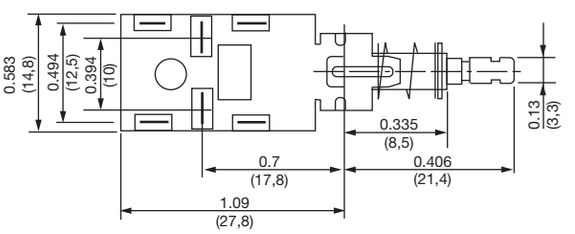

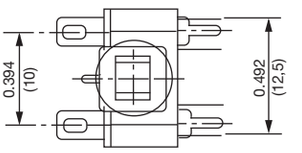

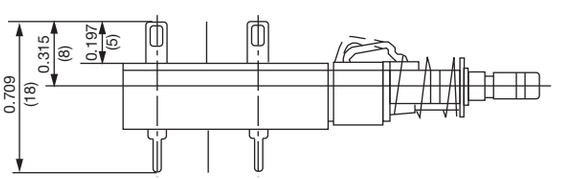

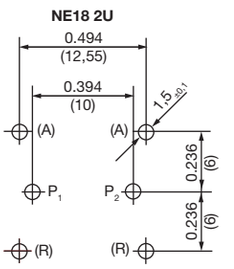

Third Angle Projection

Dimensions are shown: Inches (mm)
Specifications and dimensions subject to change

NE-18 Series
Mains / Power Switches

DESIGNATION & SWITCHES WITH STANDARD OPTIONS

NE1839EE

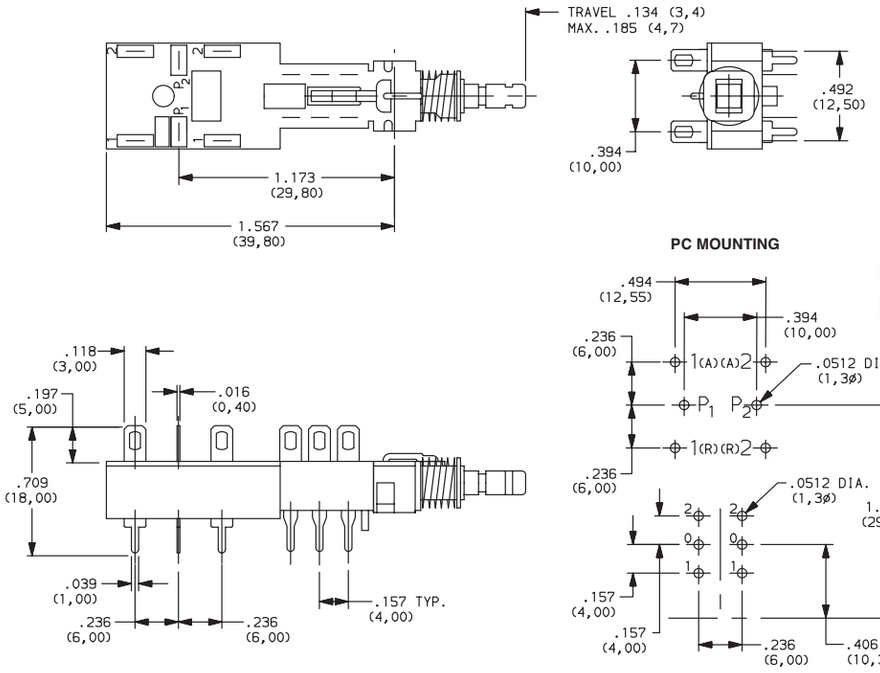

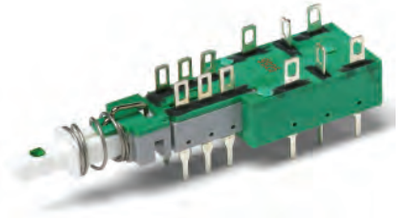

NE1846EE

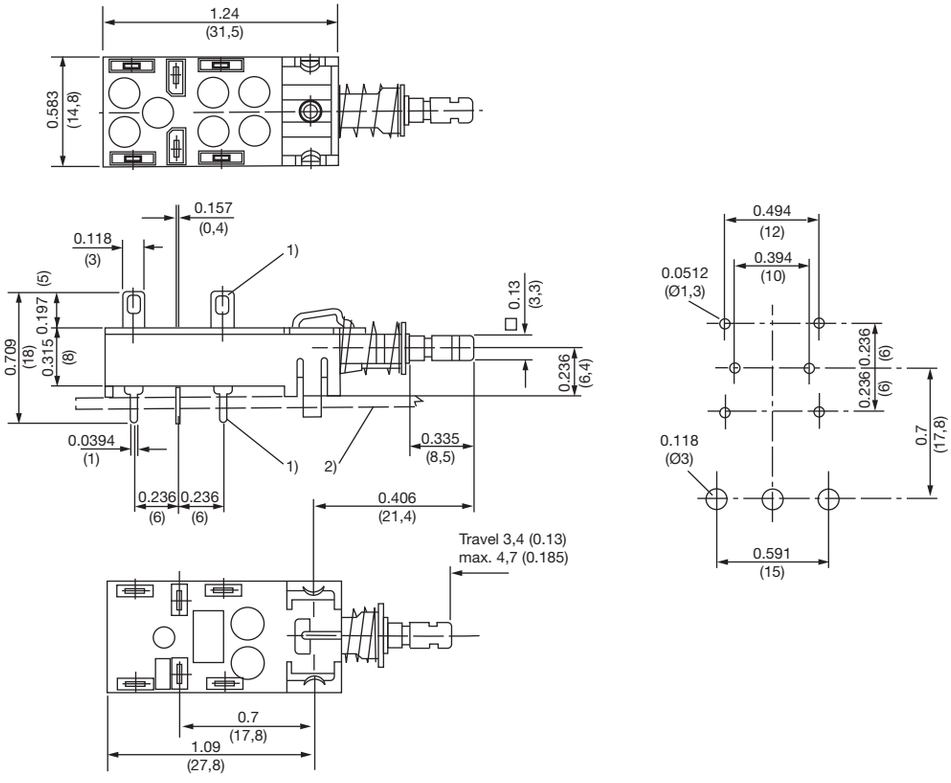

Third Angle Projection

Dimensions are shown: Inches (mm)
Specifications and dimensions subject to change

DESIGNATION & SWITCHES WITH STANDARD OPTIONS

ZNE1838EECF0201

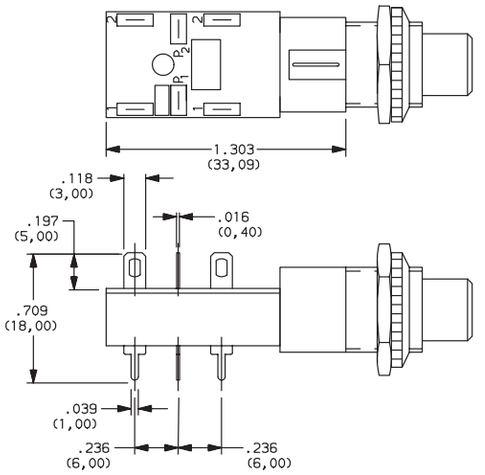

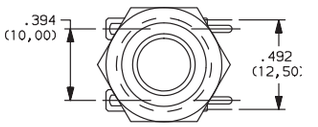

PC MOUNTING

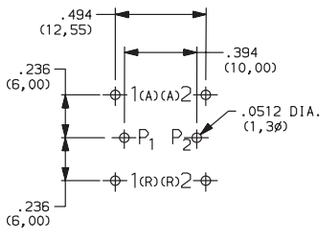

Third Angle Projection

Dimensions are shown: Inches (mm)
Specifications and dimensions subject to change

NE-18 Series
Mains / Power Switches

CONTACT ARRANGEMENT

OPTION CODE Contact capacity and availability	STYLE	ELECTRICAL CIRCUIT
37	NE18 — 2AX	DPST
38	NE18 — 2UX	DPDT
51	2U + NE18 — 2AX	DPST*
52 (4A/64)	NE18CTII — 2AX	DPST
39	2U + NE18 — 2UX	DPDT*
41	NE18 — 2AP	DPST
42	NE18 — 2UP	DPDT
43	NE18 — 2AW	DPST
44	NE18 — 2UW	DPDT
45	NE18 — 2ASX	DPST

OPTION CODE Contact capacity and availability	STYLE	ELECTRICAL CIRCUIT
46	NE18 — 2USX	DPDT
47	NE18 — 2ASP	DPST
48	NE18 — 2USP	DPDT
49	NE18 — 2ASW	DPST
50	NE18 — 2USW	DPDT
53 (4A/64)	2U + NE18CTII — 2AX	DPST
54	2U + NE18 — 2AW	DPST
55	2U + NE18 — 2AP	DPST
56	2U + NE18 — 2UW	DPDT
57	2U + NE18 — 2UP	DPDT

* 2U + Denotes auxiliary set of low current contacts DPDT
2A = DPST
2U = DPDT
S = Snap-in mounting
X = Solder lug/PC pins
W = Solder lugs only
P = PC pins only

NOTES
1. Contact plating is silver on all Power Switches.
2. The electrical function is Break Before Make (BBM) on all Power Switches.
3. The terminals will be epoxy sealed.

TYPE	POSSIBLE CONTACT ARRANGEMENT		CONTACT SPACING	PROTECTION CLASS (CEE 24)	APPROVALS
	POWER CONTACTS[1]	AUXILIARY CONTACTS			
NE18	2A[2]	2U	> 3mm (.118 inch)	II	UL61058-1
NE18	2A[2] 2U	2U	> 3mm (.118 inch)	I	UL61058-1
NE18CTII	2A[2]	2U	> 3mm (.118 inch)	II	UL61058-1

1) A = make contact, U = changeover contact
2) With 2A mains contacts: Mounting only by PC pins is not sufficient.

MECHANICAL FUNCTION

OPTION CODE	FUNCTION
OA	Momentary
EE	Alternate (push-push)

Third Angle Projection

Dimensions are shown: Inches (mm)
Specifications and dimensions subject to change

SINGLE STATION CHASSIS

01 WITH .094 MOUNTING HOLES

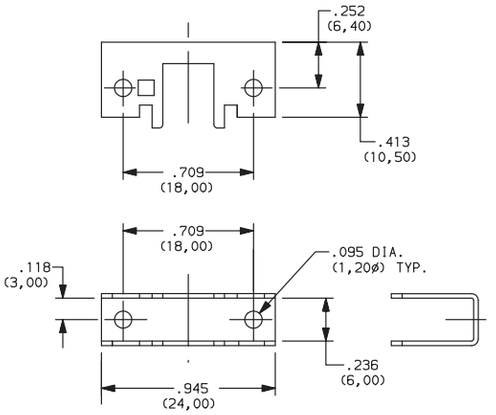

(NONE) NO CHASSIS

02 WITH 4-40 TAPPED MOUNTING HOLES

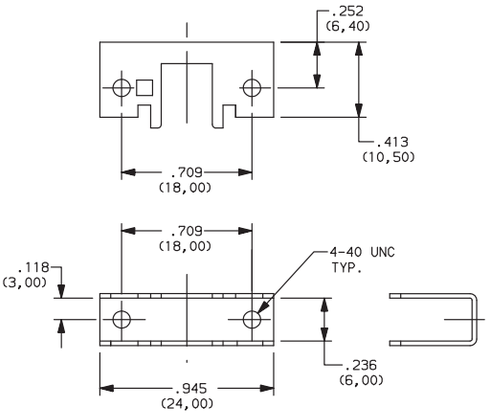

03 SPECIAL CHASSIS (CONSULT FACTORY)

DRESS NUT

(NONE) NO DRESS NUT

B BLACK

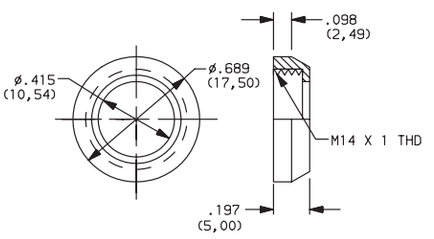

PANEL CUTOUT

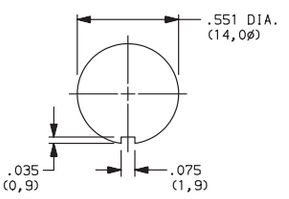

NOTE: Available with ZNE18 designation and FA200 buttons.

C CHROME

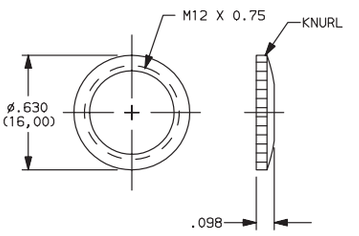

PANEL CUTOUT

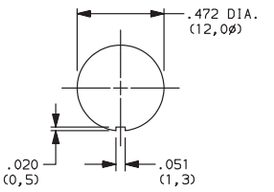

NOTE: Available with ZNE18 designation and FG button.

Third Angle Projection

Dimensions are shown: Inches (mm)
Specifications and dimensions subject to change

NE-18 Series
Mains / Power Switches

SOLID BUTTON

STYLE

F01 FMR

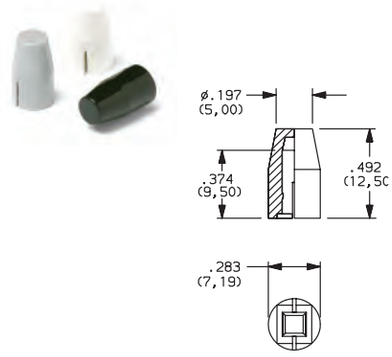

F02 FG

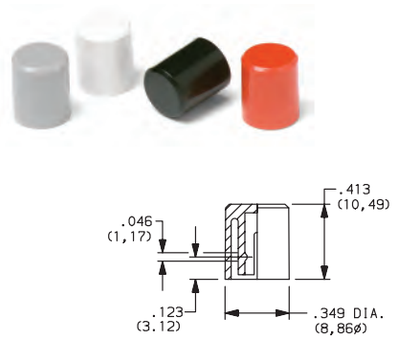

F12 FSC

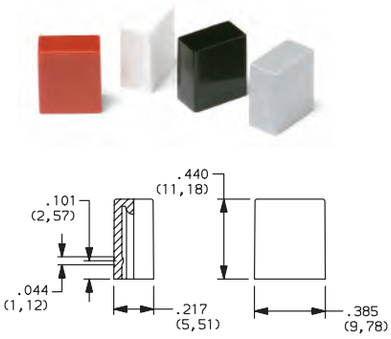

F13 FSD

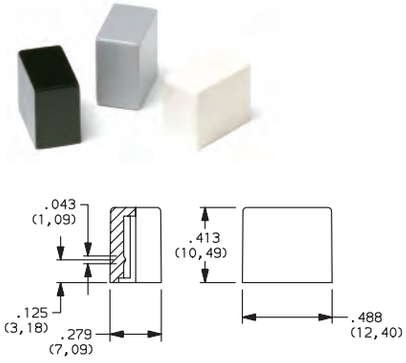

F14 FU12

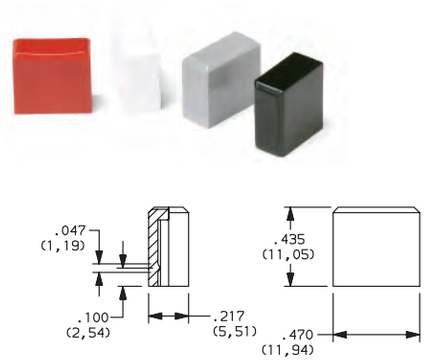

F15 FSB

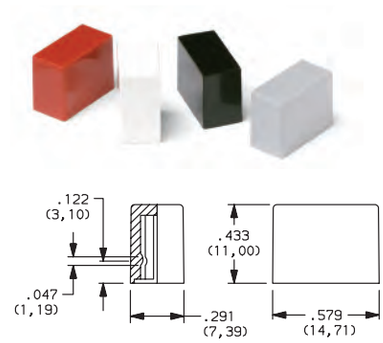

F16 FE

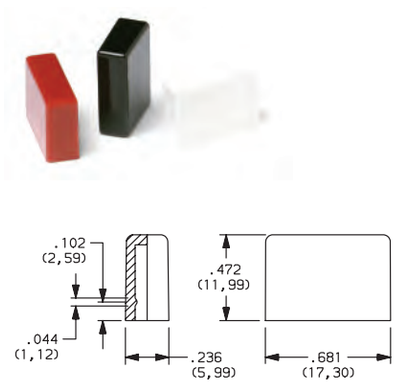

F19 FA

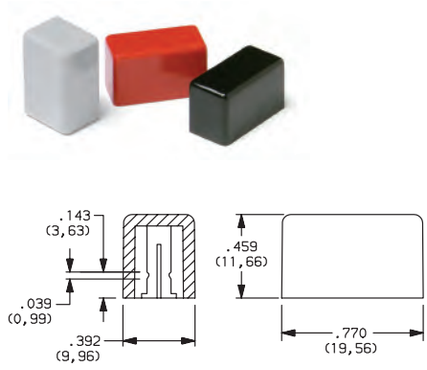

OPTION CODE	COLOR
01	BLACK
02	WHITE
03	RED
04	LT. GRAY

Third Angle Projection

Dimensions are shown: Inches (mm)
Specifications and dimensions subject to change

SOLID BUTTON

COLOR
STYLE

STYLE

F21 F001

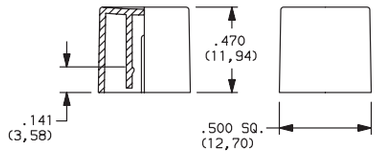

OPTION CODE	COLOR
01	BLACK
02	WHITE
03	RED
04	LT. GRAY
09	BLACK/CHROME (F03,F06 & F07 buttons only

MECHANICAL BUTTON

SHELL COLOR
IN POSITION COLOR
STYLE
OUT POSITION COLOR

STYLE

F01 FA100

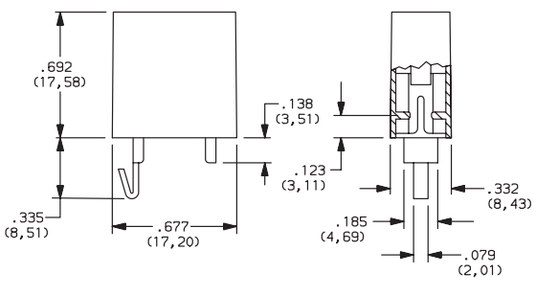

F02 FA101

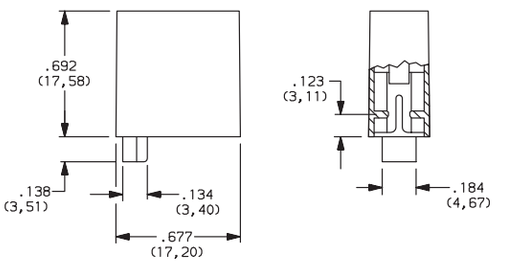

Third Angle Projection

Dimensions are shown: Inches (mm)
Specifications and dimensions subject to change

NE-18 Series
Mains / Power Switches

MECHANICAL BUTTON

SHELL COLOR — IN POSITION COLOR
STYLE — OUT POSITION COLOR

STYLE

F08 FA201

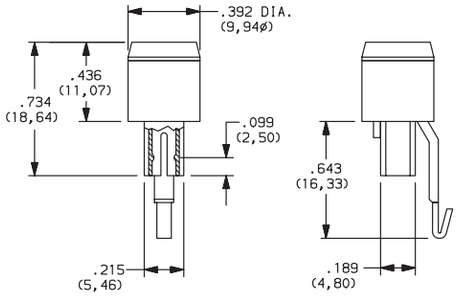

F11 FA200

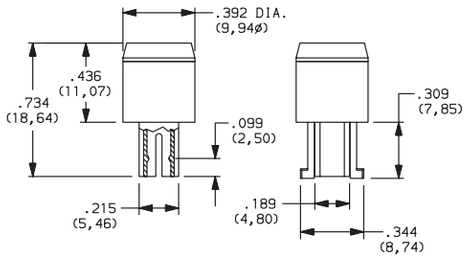

SHELL COLOR

01 BLACK

OUT POSITION COLOR

01 BLACK

IN POSITION COLOR

OPTION CODE	COLOR
02	WHITE
06	YELLOW
07	BLUE
08	GREEN
12	ORANGE

Third Angle Projection

Dimensions are shown: Inches (mm)
Specifications and dimensions subject to change

FP Series
Sealed Ultra Miniature Pushbutton Switches

Features/Benefits

- ***Vertical and right angle mount***
- ***Extended operating life 50,000 cycles***
- ***Optional caps***
- ***Sealed against soldering and cleaning processes***
- ***RoHS compliant***

Typical Applications

- ***Networking equipment***
- ***Modems***
- ***Reset functions***
- ***Instrumentation***

Specifications

CONTACT RATING: Max. 0.4 VA (28 V DC or V AC).
ELECTRICAL LIFE: 50,000 cycles.
CONTACT RESISTANCE: (10mA @ 2 V DC) 80 mΩ max. initial.
INSULATION RESISTANCE: 500MΩ min. @ 500 V DC - 1 minute.
OPERATING TEMPERATURE: –20°C to 80°C.
SOLDERABILITY: Per MIL-STD-202F method 208D, or EIA RS-186E method 9.
PACKAGING:
Tray pack - 100 switches per tray.
Caps (optional) - Bulk bag; 100 caps per bag.

NOTE: Specifications and materials listed above are for switches with standard options. For information on specific and custom switches, consult Customer Service Center.

Materials

MOVABLE CONTACTS:
Base metal: Phosphor bronze
Plating: Gold over nickel plate
FIXED CONTACTS:
Base metal: Brass
Plating: Gold over nickel plate
COVER: PA66 - Black
ACTUATOR: PPS - Black
BASE: PPS - Black
SUPPORT BRACKET (A1 Terminal Style only): Steel with tin plate

Build-A-Switch

To order, simply select desired option from each category and place in the appropriate box. Available options are shown and described on pages A-106 thru A-107. For additional options not shown in catalog, consult Customer Service Center.

F P 1 1 – S P – ☐ ☐ – B 1 – T P – ☐ ☐

Designation
FP11 SPST N.O.

Actuator Length
SP Standard plunger 3.3mm

Terminal Style
C1 Vertical
A1 Right Angle

Contact Plating
B1 Gold over nickel plate

Packaging
TP Tray packaging

Cap
00 No cap
01 White cap - bulk bagged
02 Black cap - bulk bagged
03 Red cap - bulk bagged

Dimensions are shown: Inches (mm)
Specifications and dimensions subject to change

FP Series
Sealed Ultra Miniature Pushbutton Switches

SWITCH FUNCTION

C1 VERTICAL

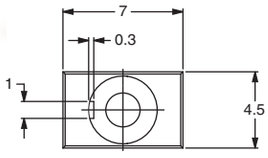

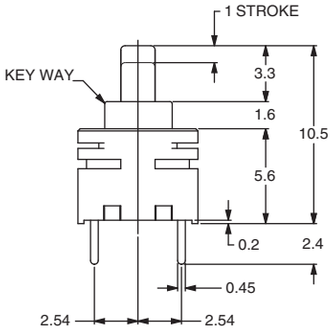

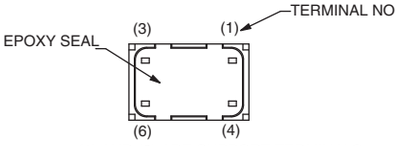

(4) AND (6) ARE SUPPORT TERMINALS

A1 RIGHT ANGLE

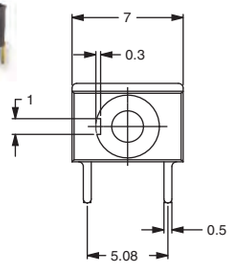

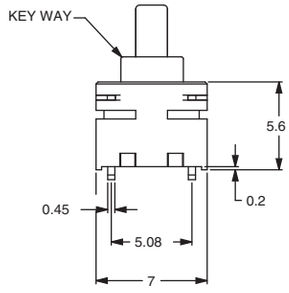

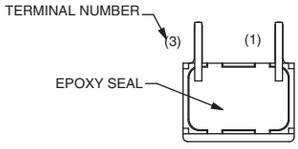

MODEL NO.	SWITCH FUNCTION POS. 1	SWITCH FUNCTION POS. 2
FP11	OFF	MOM
	CONNECTED TERMINALS	
	OPEN	1-3

SCHEMATIC SPST

ACTUATOR LENGTH

SP STANDARD PLUNGER 3.3MM

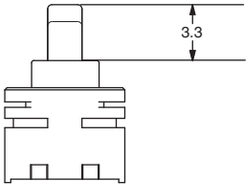

Third Angle Projection

Dimensions are shown: mm
Specifications and dimensions subject to change

TERMINAL STYLE

C1 VERTICAL

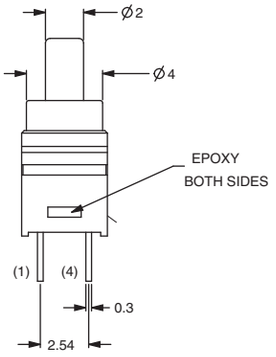

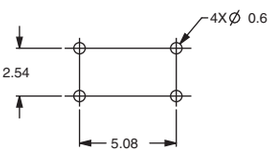

MOUNTING HOLE PATTERN

A1 RIGHT ANGLE

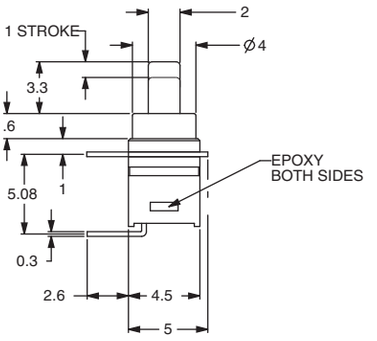

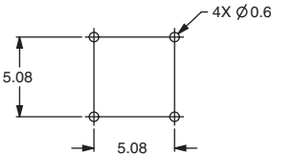

MOUNTING HOLE PATTERN

CONTACT PLATING

B1 GOLD OVER NICKEL PLATE

PACKAGING

TP TRAY PACKAGING

CAPS

OPTION CODE	DESCRIPTION
00	NO CAP
01	WHITE CAP, BULK BAGGED
02	BLACK CAP, BULK BAGGED
03	RED CAP, BULK BAGGED

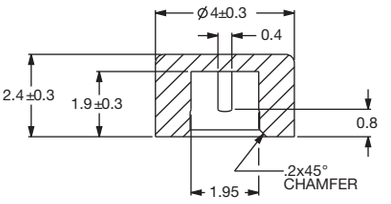

To purchase Caps separately without switch, please use these part numbers

PART #	COLOR
798D01000	WHITE
798D02000	BLACK
798D03000	RED

Third Angle Projection

Dimensions are shown: mm
Specifications and dimensions subject to change

AP Series
Industrial Pushbutton Switch

Features/Benefits

- *IP67 sealed*
- *1,000,000 life cycle*
- *Illumination / non-illumination*
- *Multiple colored caps*
- *Threaded or snap-in mounting*
- *Caps available separately*
- *RoHS compliant*

Typical Applications

- *Harsh environments*
- *Off-Road*
- *Industrial*
- *Medical*
- *Transportation*
- *Joystick control modules*
- *Gaming*
- *Military*

Specifications

FUNCTION: SPST Momentary
CONTACT ARRANGEMENT: N.O.
MOUNTING TYPE:
Snap-in (no panel seal)
Threaded body (hex nut, lock washer, and panel seal gasket provided)
Torque spec for threaded body: Do not exceed 8-9 in-lbs (0.9-1.0 N.m)

Mechanical

OPERATING LIFE: 1,000,000 cycles
TOTAL TRAVEL: 2.1 ± 0.2 mm
OPERATING POINT 1.55 ± 0.25 mm
OVER TRAVEL: 0.6 min.
OPERATING FORCE: 4N ± 1N standard configuration; other force option 2N ± 0.5N
VIBRATION: 10-500 Hz 10g Max
SHOCK: 60g 11ms sawtooth wave

Electrical

CONTACT RATING:
200mA @ 24 V DC resistive (500,000 cycles)
100mA @ 50 V DC resistive (500,000 cycles)
400mA @ 32 V AC resistive (500,000 cycles)
125mA @ 125 V AC resistive (1,000,000 cycles)
DIELECTRIC STRENGTH: 1000 V AC min.
INSULATION RESISTANCE: 1 G Ω @ 500 VDC
INITIAL CONTACT RESISTANCE 50 mΩ max (without wire leads)
BOUNCE TIME: <5 ms

Materials

HOUSING: PBT
BASE: PBT
CAP: PBT
ACTUATOR:
Illuminated: Clear polycarbonate
Non-illuminated: PBT
INTERNAL SEAL: Silicone rubber
TERMINALS: Copper alloy, gold over silver plating
MOVABLE CONTACT: Copper alloy, gold over silver plating
TERMINAL SEAL: Epoxy
WIRE LEADS: UL1569 Black 22 AWG

Operating Environment

OPERATING TEMPERATURE: -40˚C to 85˚C (+105˚C non-illuminated)
ESD PROTECTION: 20 KV min.

Process Environment

SEALING: IP67 for threaded body
IP65 for snap-in version (no panel seal)

NOTE: Specifications and materials listed above are for switches with standard options. For information on specific and custom switches, please contact Customer Service.

Build-A-Switch

To order, simply select desired option from each category and place in the appropriate box.

A P — — — — — — — B — E

Designation
AP AP Series

Operating Force
2 2 Newtons
4 4 Newtons

Actuator Style
D Dome / Convex
C Concave
E Extended Dome
N None

Actuator Color
0 No Cap
2 Black
3 Red
4 Orange
5 Yellow
6 Green
7 Blue
9 Gray

Please contact Customer Service for additional colors and paint / laser etched button options.

Illumination
00 No LED*
01 Super White
02 Bi-color; Red (Green)
03 Red
05 Amber
06 Green
07 Super Blue
08 Bi-color; Amber (Green)

* No LED available in short body only

Bushing Style**
S** Snap-in plastic
T Threaded plastic

** No panel seal option
*** PC terminals not available with illumination

Termination
Z Solder Lug
W 12" Wire Leads 22 AWG
C*** PC Terminals

Contact Material
B Gold

Terminal Seal
E Epoxy
All models are epoxy sealed

Contact Customer Service for additional hardware options.

Specifications and dimensions subject to change

STANDARD VIEW

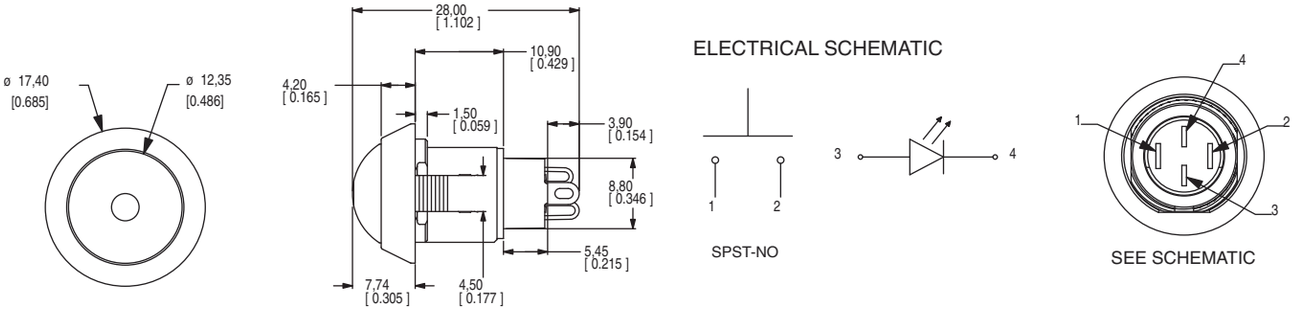

OPERATING FORCE

OPTION CODE	OPERATING FORCE
2	2 N, 200 g
4	4 N, 400 g

ACTUATOR STYLE

D DOME / CONVEX

E EXTENDED DOME

C CONCAVE

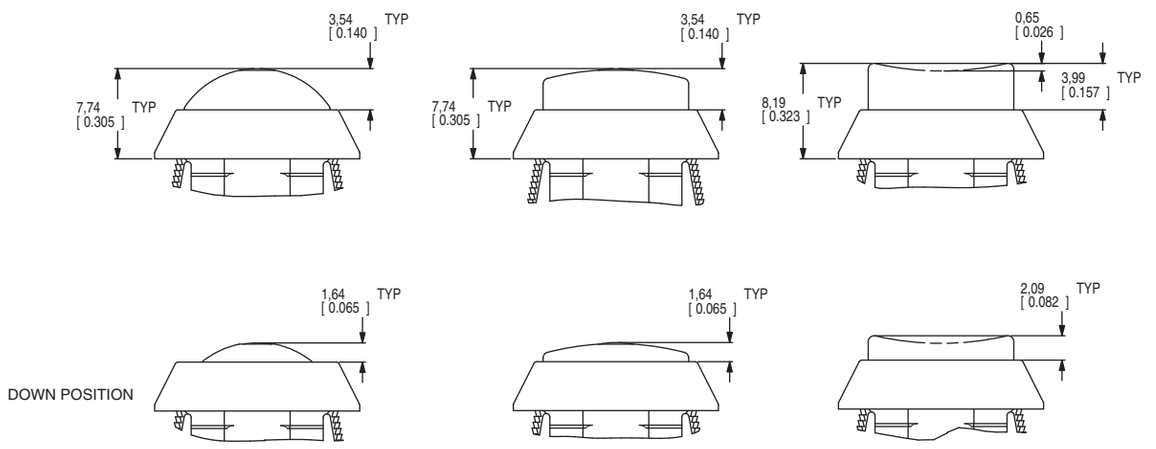

ACTUATOR COLOR

OPTION CODE	ACTUATOR COLOR
0	No Cap
2	Black
3	Red
4	Orange
5	Yellow
6	Green
7	Blue
9	Gray

For additional colors please contact Customer Service.

Third Angle Projection

Dimensions are shown: mm (inches
Specifications and dimensions subject to change

AP Series
Industrial Pushbutton Switch

ILLUMINATION

OPTION CODE	ILLUMINATION TYPE	TYPICAL INTENSITY* MIN	MAX	PEAK WAVELENGTH	Vf Forward Voltage
		(mcd)		(nm)	
00	Model without illumination	N/A		N/A	
01	LED Super White	4,000	5,000	N/A	3.5
02	LED Bi-Color – Red (Green)	10	20	635/565	2.0
03	LED Red	4	8	700	2.0
05	LED Amber	35	50	610	2.0
06	LED Green	35	50	565	2.0
07	LED Super Blue	800	1,500	470	3.8
08	LED Bi-Color – Amber (Green)	10	10	585/565	2.0

*LED FORWARD CURRENT: 20 mA
LED FORWARD VOLTAGE: see chart above
LED REVERSE VOLTAGE: 5.0 V MAX

* For information on specific and custom LED, please contact Customer Service.

NOTE:
For bi-color LED's the polarity must be reversed to alternate the color

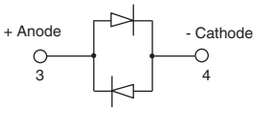

BUSHING STYLE

S SNAP-IN

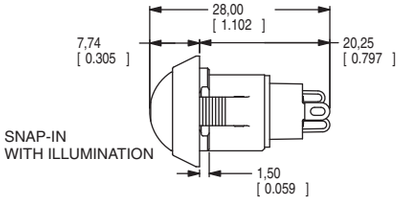

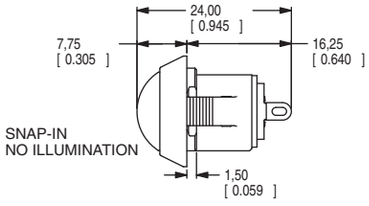

T THREADED PLASTIC

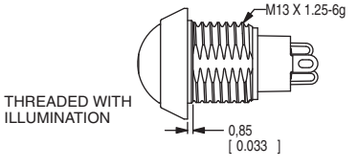

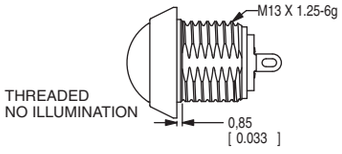

PANEL CUTOUT

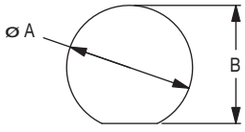

PANEL THICKNESS	DIM A (± 0.05 mm)	DIM B (± 0.05 mm)
1 mm [0.039 in]	13.70 mm [0.539 in]	13.00 mm [0.512 in]
2 mm [0.079 in]	13.80 mm [0.539 in]	13.00 mm [0.512 in]
3 mm [0.118 in]	13.90 mm [0.547 in]	13.10 mm [0.516 in]
THREADED BODY MIN PANEL THICKNESS 1 mm	13.70 mm [0.539 in]	13.00 mm [0.512 in]

Third Angle Projection

A 0.1mm min. chamfer on the leading edge of the mounting hole is recommended for snap-in version.

Dimensions are shown: mm (inches)
Specifications and dimensions subject to change

TERMINATION

Z SOLDER LUG

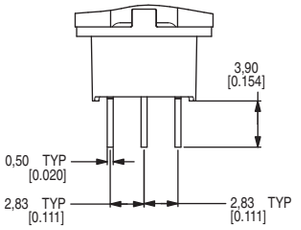

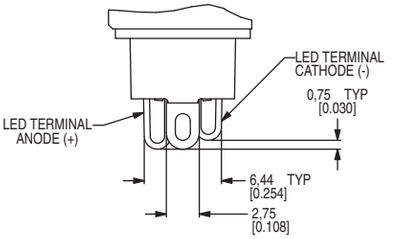

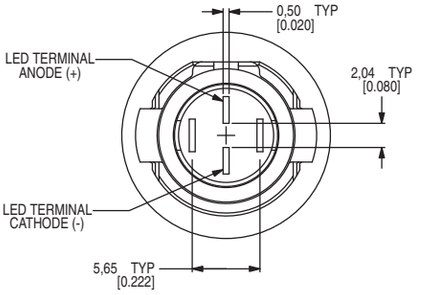

* Switching terminals are gold and LED terminals are silver

C PC TERMINALS

*** Illumination not available with PC Terminals

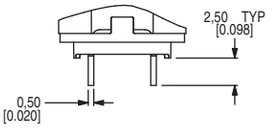

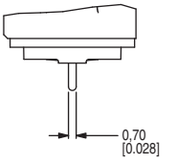

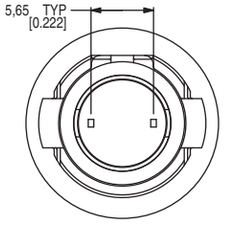

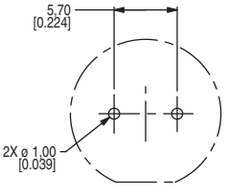

PCB HOLE PATTERN
BOARD VIEW

W 12" WIRE LEADS 22 AWG

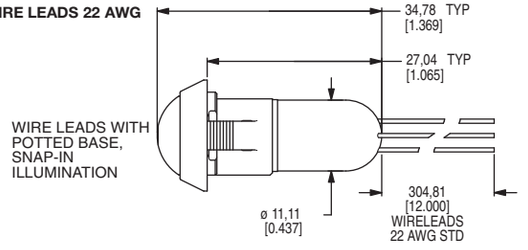

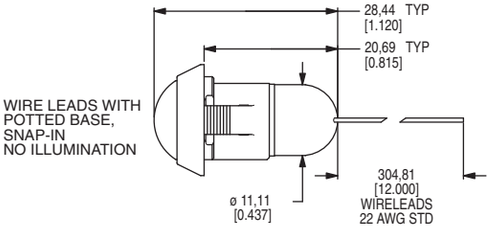

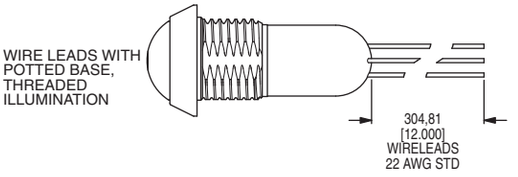

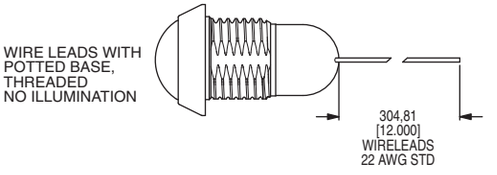

Wires: Black wires - Terminals
Red wires - LED (+) Positive
White wire - LED (-) Negative

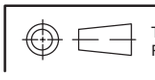

Third Angle
Projection

Dimensions are shown: mm (inches
Specifications and dimensions subject to change

AP Series
Industrial Pushbutton Switch

CONTACT MATERIAL

B GOLD

OPTION CODE	CONTACT MATERIAL
B	Gold

TERMINAL SEAL

E EPOXY

All models are epoxy sealed

HARDWARE

LOCK WASHER
Part Number 647D00000

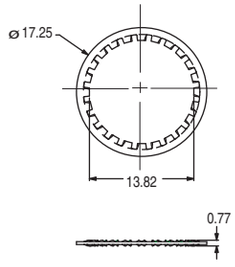

HEX NUT
Part number 515D00000

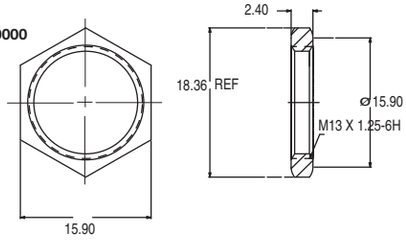

PANEL SEAL
Part Number 655D00000

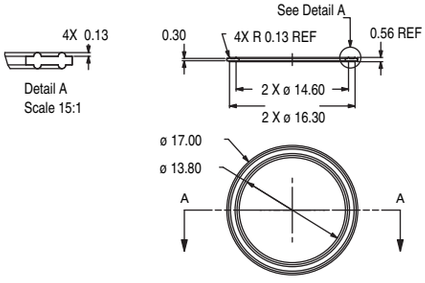

Caps available on next page

Third Angle Projection

Dimensions are shown: mm (inches)
Specifications and dimensions subject to change

AVAILABLE CAPS

481D XX XXX

Cap Color

Style

OPTION	CAP COLOR
01	WHITE
02	BLACK
03	RED
04	ORANGE
05	YELLOW
06	GREEN
07	BLUE
08	BROWN
09	GRAY

PART NUMBER	HOLE	STYLE
481DXX000	NO	DOME
481DXX001	YES	DOME
481DXX002	NO	EXTENDED DOME
481DXX003	YES	EXTENDED DOME
481DXX004	NO	CONCAVE
481DXX005	YES	CONCAVE

DOME

481DXX000 = NO HOLE
481DXX001 = HOLE

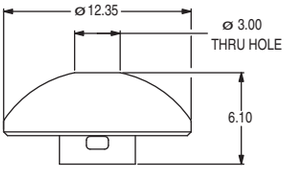

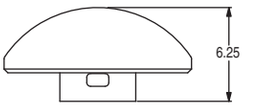

EXTENDED DOME

481DXX002 = NO HOLE
481DXX003 = HOLE

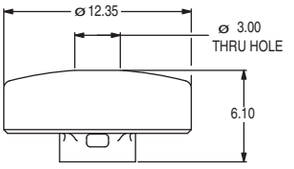

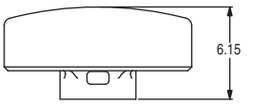

CONCAVE

481DXX004 = NO HOLE
481DXX005 = HOLE

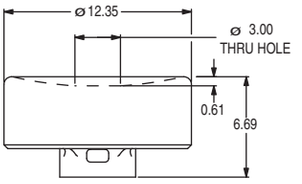

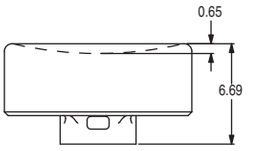

Third Angle Projection

Dimensions are shown: mm (inches)
Specifications and dimensions subject to change

APB Series
Backlit Pushbutton Switch

Features/Benefits

- *IP67 sealed*
- *1,000,000 life cycle*
- *Illumination*
- *Threaded or snap-in mounting*
- *RoHS compliant*

Typical Applications

- *Harsh environments*
- *Off-Road*
- *Industrial*
- *Medical*
- *Transportation*
- *Joystick control modules*
- *Gaming*
- *Military*

Specifications

FUNCTION: SPST Momentary
CONTACT ARRANGEMENT: N.O.
MOUNTING TYPE:
Snap-in (no panel seal)
Threaded body (hex nut, lock washer, and panel seal gasket provided)
Torque spec for threaded body: Do not exceed 8-9 in-lbs (0.9-1.0 N.m)

Mechanical

OPERATING LIFE: 1,000,000 cycles
TOTAL TRAVEL: 2.1 ± 0.2 mm
OPERATING POINT 1.55 ± 0.25 mm
OVER TRAVEL: 0.6 min.
OPERATING FORCE: 4N ± 1N standard configuration; other force option 2N ± 0.5N
VIBRATION: 10-500 Hz 10g Max
SHOCK: 60g 11ms sawtooth wave

Electrical

CONTACT RATING:
200mA @ 24 V DC resistive (500,000 cycles)
100mA @ 50 V DC resistive (500,000 cycles)
400mA @ 32 V AC resistive (500,000 cycles)
125mA @ 125 V AC resistive (1,000,000 cycles)
DIELECTRIC STRENGTH: 1000 V AC min.
INSULATION RESISTANCE: 1 G Ω @ 500 VDC
INITIAL CONTACT RESISTANCE 50 mΩ max (without wire leads)
BOUNCE TIME: <5 ms

Materials

HOUSING: PBT
BASE: PBT
CAP: Painted polycarbonate
ACTUATOR:
Illuminated: Clear polycarbonate
INTERNAL SEAL: Silicone rubber
TERMINALS: Copper alloy, gold over silver plating
MOVABLE CONTACT: Copper alloy, gold over silver plating
TERMINAL SEAL: Epoxy
WIRE LEADS: UL1569 Black 22 AWG

Operating Environment

OPERATING TEMPERATURE: -40˚C to 85˚C
ESD PROTECTION: 20 KV min.

Process Environment

SEALING: IP67 for threaded body
IP65 for snap-in version (no panel seal)

NOTE: Specifications and materials listed above are for switches with standard options. For information on specific and custom switches, please contact Customer Service.

Build-A-Switch

To order, simply select desired option from each category and place in the appropriate box.

A P B — [ ] — E — [ ][ ] — [ ] — [ ] — B — E — [ ][ ][ ]

Designation
APB APB Series

Operating Force
2 2 Newtons
4 4 Newtons

Cap
E Extended Dome (600E)

Illumination
01 Super White
07 Super Blue

Bushing Style
S Snap-in plastic
T Threaded plastic

Termination
Z Solder Lug
W 12" Wire Leads 22 AWG

Contact Material
B Gold

Terminal Seal
E Epoxy

Cap Symbol
000 Painted black over white without symbol*
001 Plus
002 Locked
003 Engine stop
004 Park brake release
005 Engine start
006 Fast
007 Slow
008 Unlocked
009 Rock shaft lower
010 Minus

* cap painted black over white to allow customer laser etching

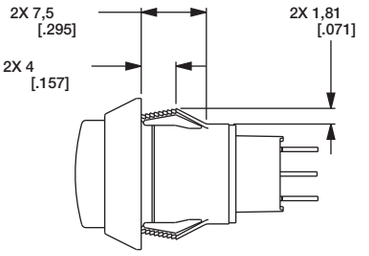

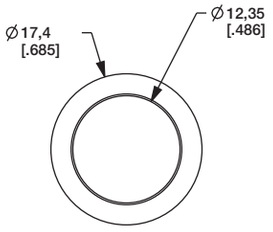

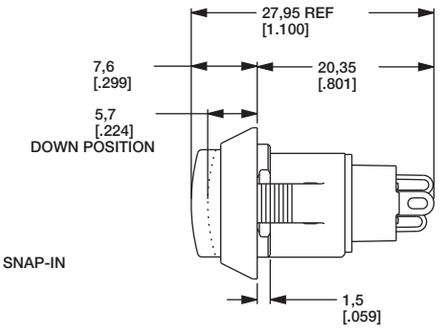

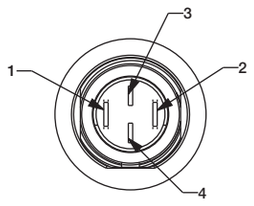

SEE SCHEMATIC

THREADED

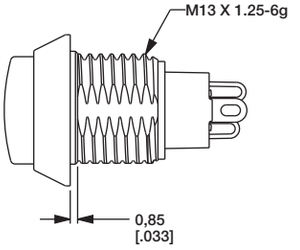

ELECTRICAL SCHEMATIC

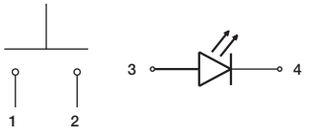

SPST-NO-DB

PANEL CUTOUT

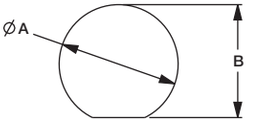

PANEL THICKNESS	DIM A (±0.05 MM)	DIM B (±0.05 MM)
1 MM [0.039 IN]	13.70 MM [0.539 IN]	13.00 MM [0.512 IN]
2 MM [0.079 IN]	13.80 MM [0.539 IN]	13.00 MM [0.512 IN]
3 MM [0.118 IN]	13.90 MM [0.547 IN]	13.10 MM [0.516 IN]
THREADED BODY MIN PANEL THICKNESS 1 MM	13.70 MM [0.539 IN]	13.00 MM [0.512 IN]

A 0.1 MM MIN CHAMFER ON THE LEADING EDGE OF MOUNTING HOLE IS RECOMMENDED FOR SNAP-IN VERSION.

Third Angle Projection

Dimensions are shown: Inches (mm)
Specifications and dimensions subject to change

APB Series
Backlit Pushbutton Switch

TERMINATION

W 12" WIRE LEADS

Z SOLDER LUG

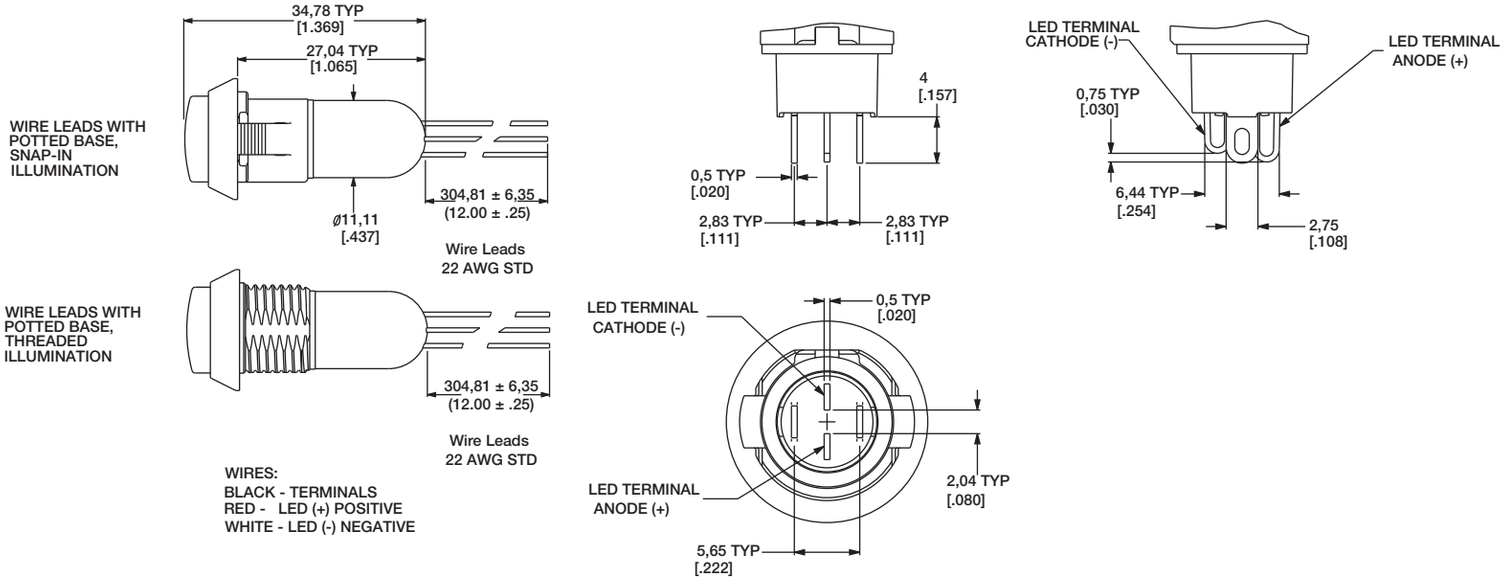

CONTACT MATERIAL

B GOLD

OPTION CODE	CONTACT MATERIAL
B	Gold

TERMINAL SEAL

E EPOXY

All models are epoxy sealed

Third Angle Projection

Dimensions are shown: Inches (mm)
Specifications and dimensions subject to change

CAP SYMBOLS

-000		NO SYMBOL
-001		PLUS
-002		LOCKED
-003	STOP	ENGINE STOP
-004		PARK BRAKE RELEASE
-005		ENGINE START
-006		FAST
-007		SLOW
-008		UNLOCKED
-009		ROCK SHAFT LOWER
-010		MINUS

NOTES:
1. ALL GRAPHICS MUST BE POSITIONED AS SHOWN, PERPENDICULAR TO ALIGNMENT FEATURE ON UNDERSIDE OF CAP.
2. GRAPHIC MARKING MUST BE ALIGNED WITH THE FLAT FEATURE ON THE UNDERSIDE OF THE CAP AS SHOWN, TOLERANCE ±3°

PANEL CUTOUT

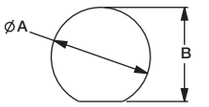

Panel Orientation
Flat indicates bottom

See chart on previous page for dimensions

HARDWARE

LOCK WASHER
Part Number 647D00000

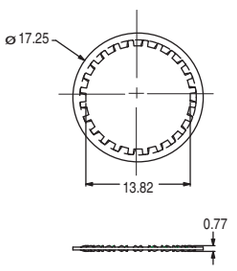

HEX NUT
Part number 515D00000

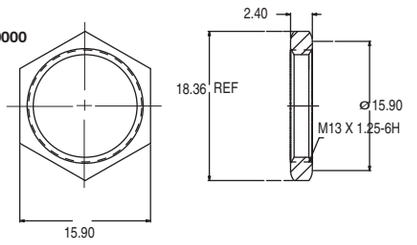

PANEL SEAL
Part Number 655D00000

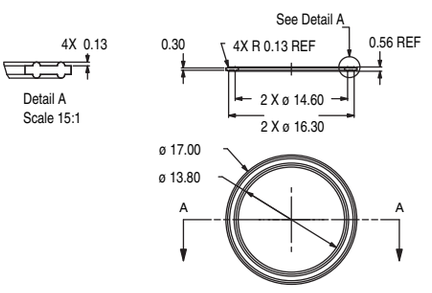

Third Angle Projection

Dimensions are shown: Inches (mm)
Specifications and dimensions subject to change

HP Series
Hall Effect Pushbutton Switch

Features/Benefits

- ***IP68 sealed***
- ***10,000,000 life cycle***
- ***Multiple colored caps***
- ***Redundant output available***

Typical Applications

- ***Harsh environments***
- ***Off-Road***
- ***Industrial***
- ***Medical***
- ***Transportation***
- ***Joystick control modules***
- ***Gaming***
- ***Military***

Specifications

FUNCTION: Linear output (See chart on next page)
MOUNTING TYPE: Front mount, Rear mount

Mechanical

MECHANICAL TRAVEL: 0.150 (3.81mm)
SHOCK: 60g 11ms sawtooth wave
VIBRATION: 10-500Hz 10g max.

Electrical

SUPPLY VOLTAGE: 5 ± 0.5 VDC
SUPPLY CURRENT: 10mA max.
OUTPUT CURRENT: 1mA max.
OUTPUT VOLTAGE: Programable from 0.5 -4.5V
ESD PROTECTION: 16kV per EIA-545

Materials

CASE / BUSHING: Anodized Aluminum
INSIDE HOUSING: PBT
CAP: PBT
ACTUATOR: PBT

Operating Environment

OPERATING TEMPERATURE: -40˚C to 85˚C
OPERATING LIFE: 10,000,000 cycles
SEALING: IP68S

NOTE: Specifications and materials listed above are for switches with standard options. For information on specific and custom switches, please contact Customer Service.

Build-A-Switch

To order, simply select desired option from each category and place in the appropriate box.

H P — ☐ — ☐ — ☐ — ☐ — ☐ — ☐ — ☐ — ☐ — ☐

Designation
HP HP Series

Bushing / Mounting Style
1 Front mount, 5/8-24 thread
2 Rear mount, 5/8-24 thread
3 Rear mount, 15/32-32 thread

Cap Style
1 ø .625 Dome (front mount only)
2 ø .370 Flat

Sensor Configuration
S Single Output
D Dual Output, Output 2 mirrors Output 1 (see figure 1)

Output Voltage Code
1 V1= 1.0V, V2= 4.0V
2 V1= 4.0V, V2= 1.0V
3 V1= 0.5V, V2= 4.5V
4 V1= 4.5V, V2= 0.5V

Actuation Force
S 2.7lb (12N)

Termination Style
W 12" wire leads, 22 AWG XLPE (26 AWG for Dual Output)

Cap Color
1 White
2 Black (STD)
3 Red
4 Orange
5 Yellow

Bushing Finish
1 Clear anodize
2 Black anodize (STD)

Hardware
0 No hardware
1 Plated hardware (STD)
2 Stainless hardware

Please contact Customer Service for additional options.

STANDARD VIEW

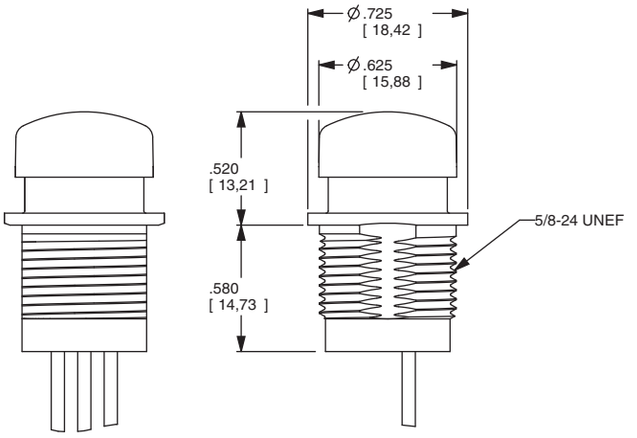

HP11

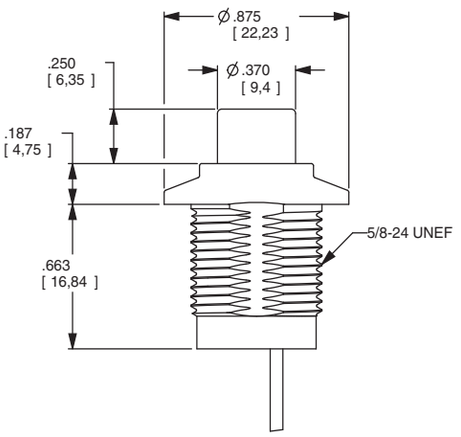

HP12

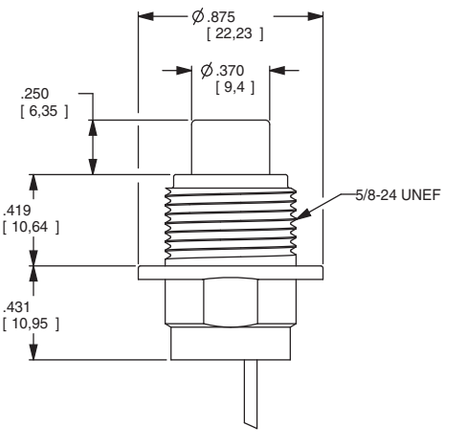

HP22

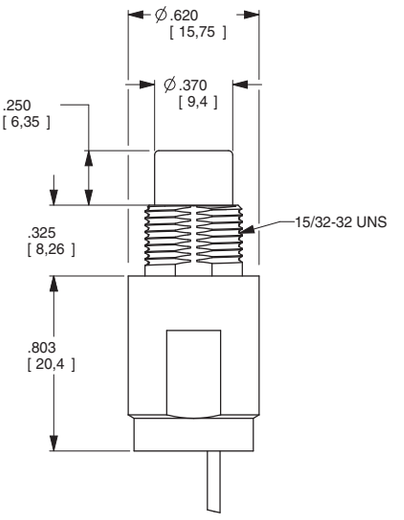

HP32

FIGURE 1: OUTPUT VOLTAGE

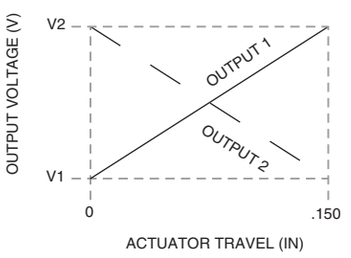

FIGURE 2- SCHEMATIC

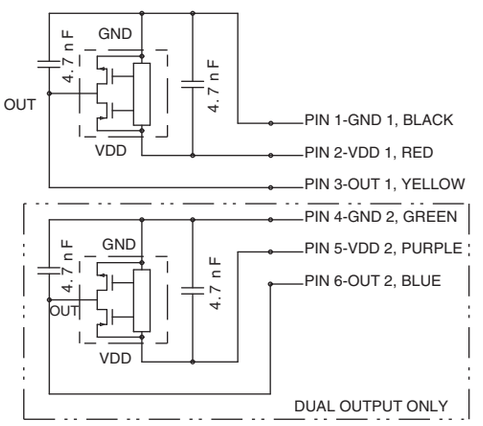

Third Angle Projection

Dimensions are shown: Inches (mm)
Specifications and dimensions subject to change

NP Series
Sealed Industrial Pushbutton Switch

Features/Benefits

- ***IP68 sealed***
- ***1,000,000 life cycle***
- ***Multiple housing styles***
- ***Capable of up to 5A resistive load***
- ***Wirelead options available***
- ***RoHS compliant***

Typical Applications

- ***Harsh environments***
- ***Off-Road***
- ***Industrial***
- ***Transportation***
- ***Military***

Specifications

FUNCTION: SPDT Double Break (Form Z) Momentary
CONTACT ARRANGEMENT: N.O. and N.C.
MOUNTING TYPE: Threaded front or rear mount and slot mount
TORQUE SPEC FOR THREADED BODY: Do not exceed 50 in-lbs (5.65 N-m)

Mechanical

OPERATING LIFE: 1,000,000 cycles
TOTAL TRAVEL: 1.6 ± 0.15 mm
OPERATING POINT 0.9 ± 0.25 mm
OVER TRAVEL: 0.45 min.
OPERATING FORCE: 8N ± 1.5N
VIBRATION: 10-500 Hz 10g Max
SHOCK: 50g 11ms sawtooth wave

Electrical

CONTACT RATING:
Option G - Gold over Silver
10mA/5 VDC (1,000,000 cycles)
Option Q - Silver
1A/32 VDC resistive (100,000 cycles)
5A/32 VDC resistive (25,000 cycles)
3A/32 VDC resistive (25,000 cycles)

Electrical (cont.)

DIELECTRIC STRENGTH: 1000 V AC for 1 min.
INSULATION RESISTANCE: 1 G Ω @ 500 VDC
INITIAL CONTACT RESISTANCE 50 mΩ max (without wire leads)
BOUNCE TIME: <5 ms

Materials

HOUSING: 6061-T6 Aluminum, black or clear anodized
BASE: PBT
CAP: PBT
ACTUATOR: PBT
INTERNAL SEAL: Silicone rubber
TERMINALS: Copper with silver nickel inlay, silver plating
MOVABLE CONTACT: Copper alloy, gold over silver plating
TERMINAL SEAL: Epoxy

Operating Environment

OPERATING TEMPERATURE: -40˚C to +85˚C
ESD PROTECTION: 15KV min.

Process Environment

SEALING: IP68

NOTE: Specifications and materials listed above are for switches with standard options. For information on specific and custom switches, please contact Customer Service.

Build-A-Switch

To order, simply select desired option from each category and place in the appropriate box.

N P — 8 — ☐ — ☐ — ☐ — ☐ — ☐ — ☐ — E

Designation
NP NP Series

Operating Force
8 8 Newtons

Actuator Style
S Standard
E Extended (D housing style only)

Actuator Color*
2 Black (STD)
3 Red
4 Orange
5 Yellow
9 Gray

* Please contact Customer Service for additional colors.

Housing Style
T Standard threaded mount
L Long threaded mount
H Short threaded mount
S Slot mount
R Rear mount
D Dome bezel
P Tapered bezel

Housing Anodizing Color
1 Clear anodized
2 Black anodized (STD)

Termination
03 Solder Lug (STD)
02 PC Pin (G Contact Material)
W4 4x 12" 22 AWG UL1569 wire (overmolded)
W3 3x 12" 22 AWG UL1569 wire (overmolded)

Contact Material
Q Silver (STD)
G Gold over silver

Terminal Seal
E Epoxy
All models are epoxy sealed

STANDARD VIEW

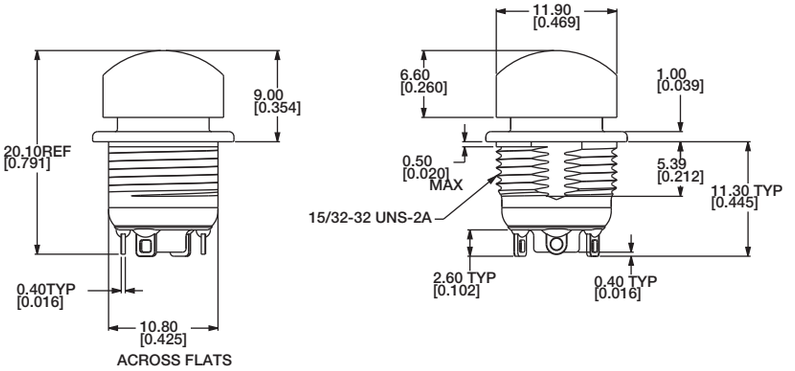

ELECTRICAL SCHEMATIC

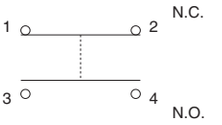

OPERATING FORCE

OPTION CODE	OPERATING FORCE
8	8 N

ACTUATOR STYLE

S STANDARD

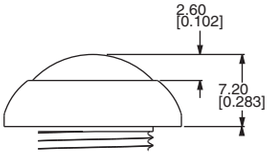

E EXTENDED (D HOUSING STYLE ONLY)

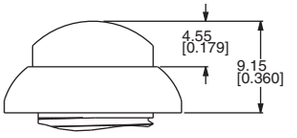

ACTUATOR COLOR

OPTION CODE	ACTUATOR COLOR
2	Black
3	Red
4	Orange
5	Yellow
9	Gray

For additional colors please contact Customer Service.

Third Angle Projection

Dimensions are shown: mm (inches)
Specifications and dimensions subject to change

NP Series
Sealed Industrial Pushbutton Switch

HOUSING STYLE

T STANDARD THREADED MOUNT

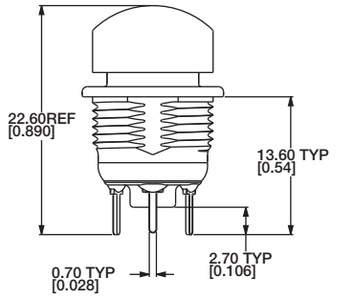

PC TERMINALS

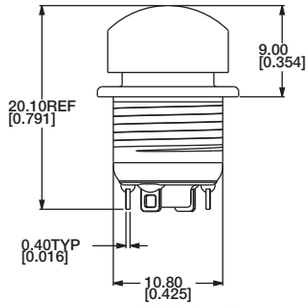

ACROSS FLATS

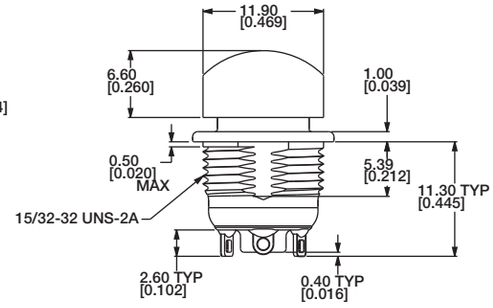

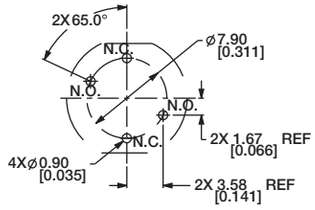

PC HOLE PATTERN
BOARD VIEW

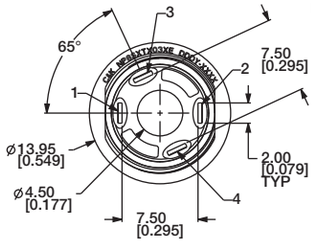

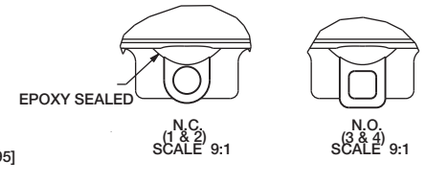

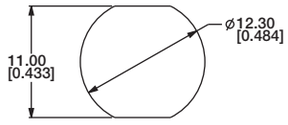

PANEL CUTOUT

L LONG THREADED MOUNT

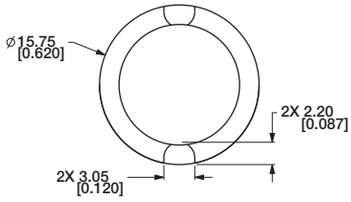

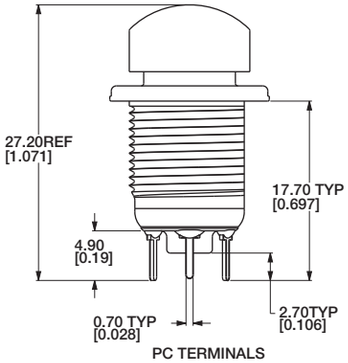

PC TERMINALS

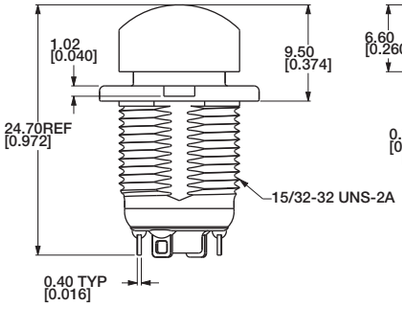

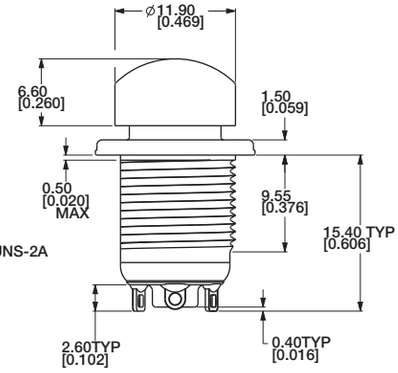

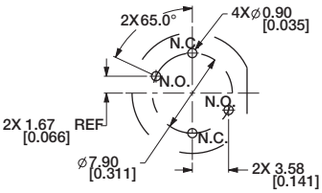

PC HOLE PATTERN
BOARD VIEW

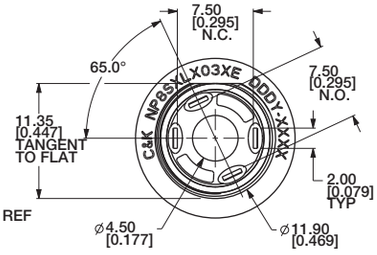

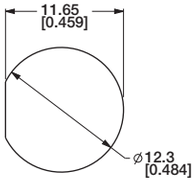

PANEL CUTOUT

Third Angle
Projection

Dimensions are shown: mm (inches)
Specifications and dimensions subject to change

HOUSING STYLE

H SHORT THREADED MOUNT

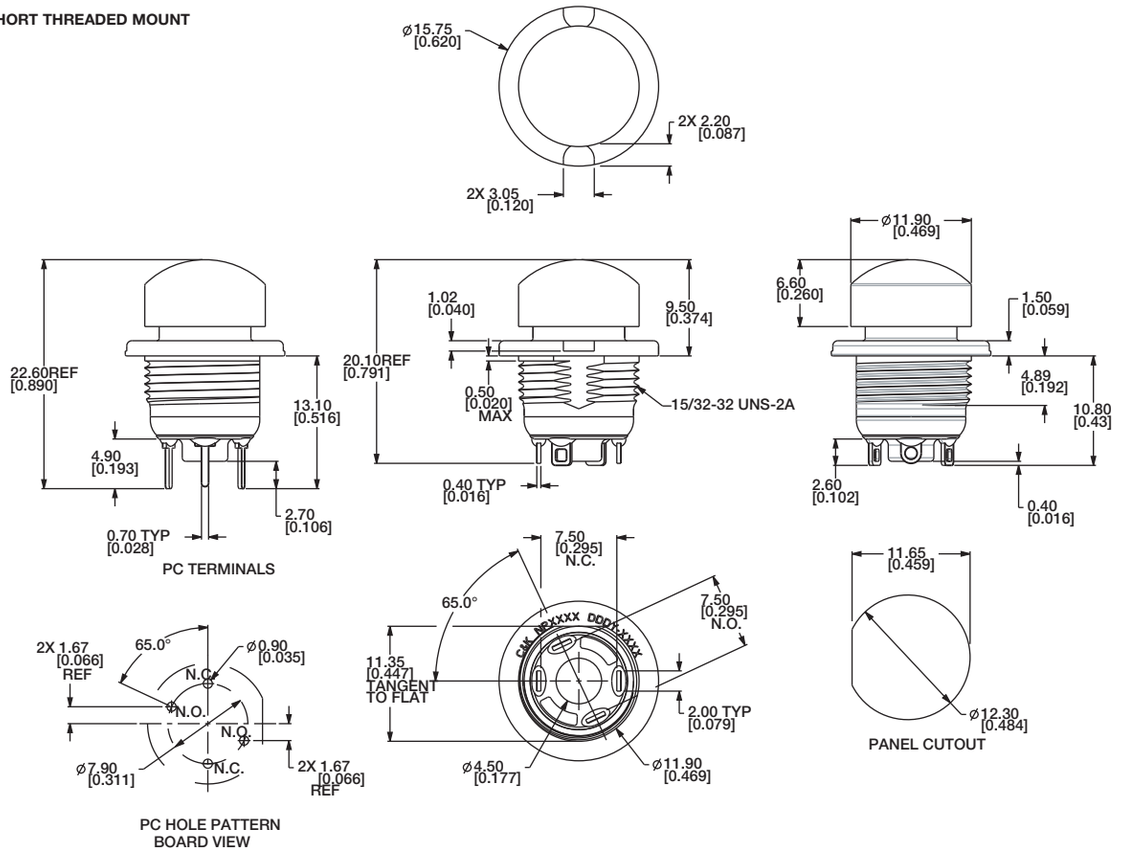

S SLOT MOUNT

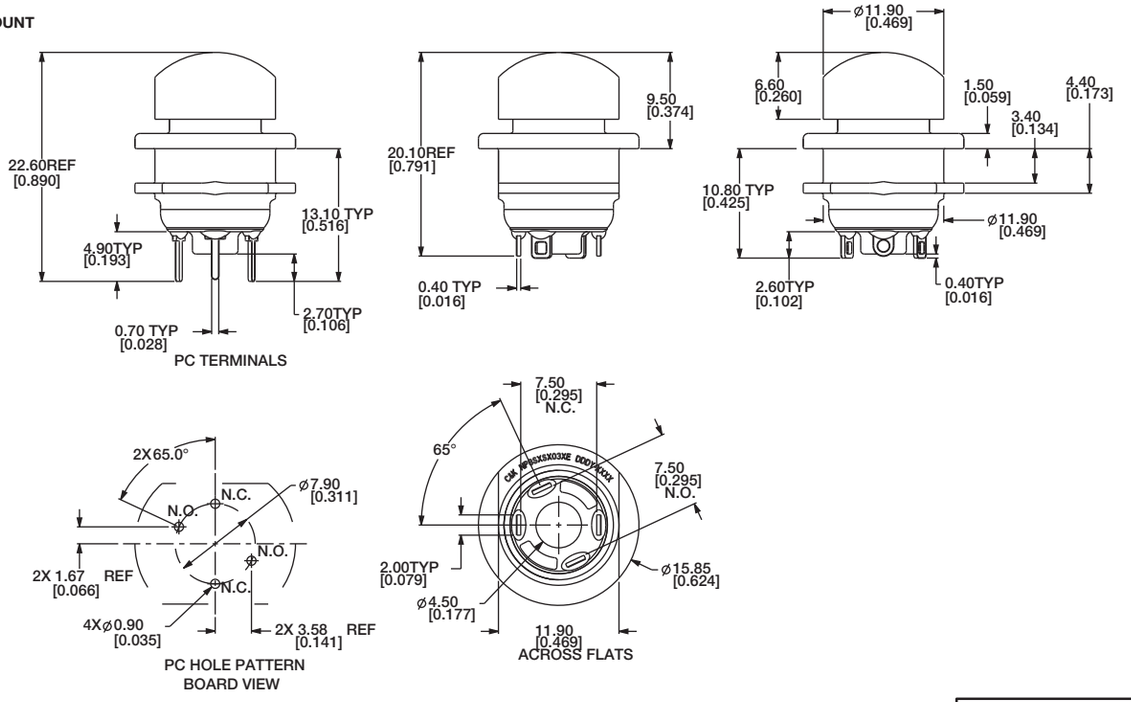

Third Angle
Projection

Dimensions are shown: mm (inches)
Specifications and dimensions subject to change

NP Series
Sealed Industrial Pushbutton Switch

HOUSING STYLE

R REAR MOUNT

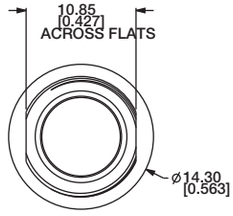

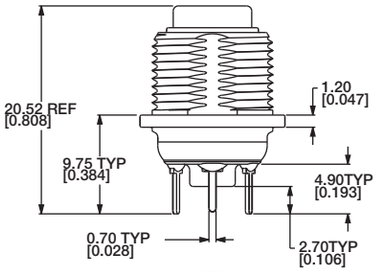

PC TERMINALS

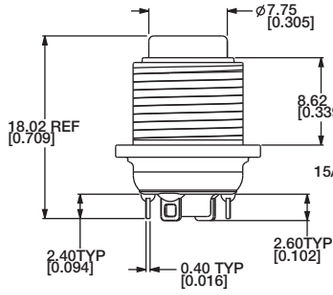

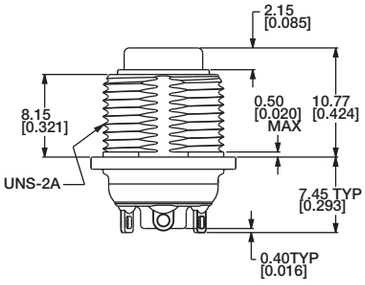

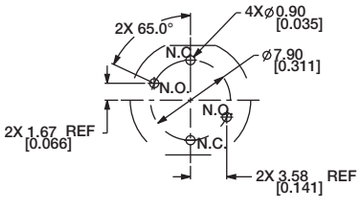

PC HOLE PATTERN
BOARD VIEW

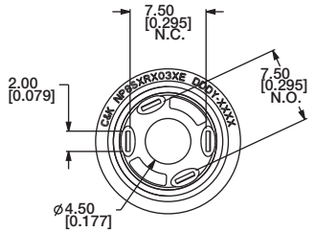

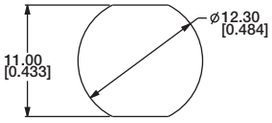

PANEL CUTOUT

D DOME BEZEL

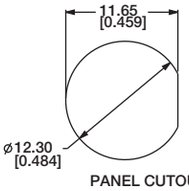

PANEL CUTOUT

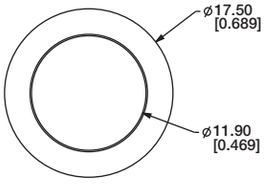

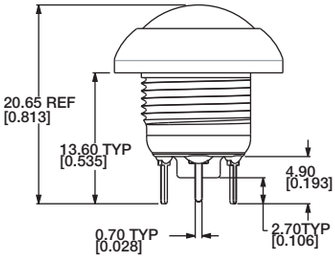

PC TERMINALS

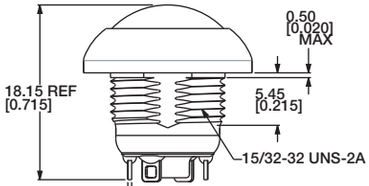

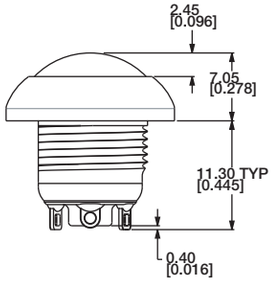

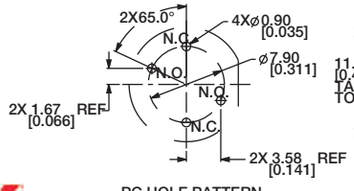

PC HOLE PATTERN
BOARD VIEW

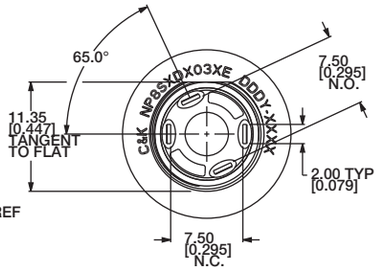

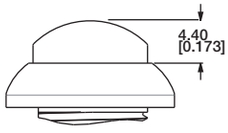

EXTENDED CAP

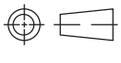

Third Angle
Projection

Dimensions are shown: Inches (mm)
Specifications and dimensions subject to change

HOUSING STYLE

P TAPERED BEZEL

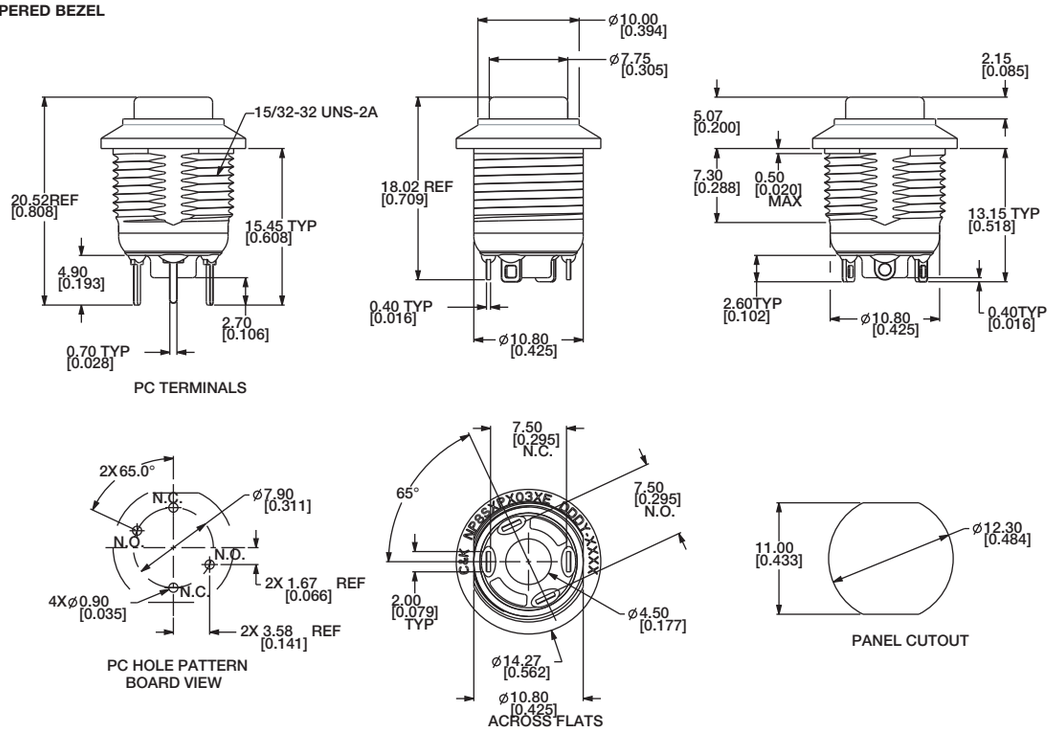

HOUSING ANODIZING COLOR

OPTION CODE	ANODIZING COLOR
1	Clear anodized
2	Black anodized (STD)

TERMINATION

03 SOLDER LUG (STD)

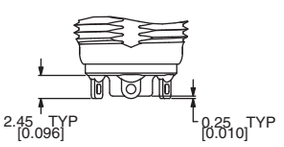

02 PC PIN (G CONTACT MATERIAL)

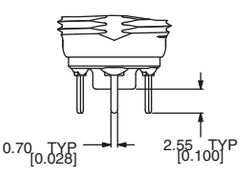

Third Angle Projection

Dimensions are shown: Inches (mm)
Specifications and dimensions subject to change

NP Series
Sealed Industrial Pushbutton Switch

TERMINATION

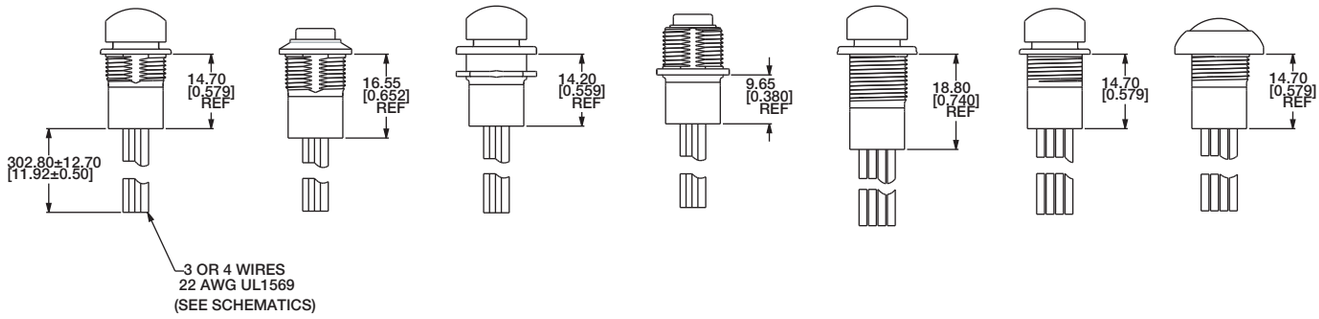

W3 3X 12" 22 AWG UL1569 WIRE (OVERMOLDED)

W4 4X 12" 22 AWG UL1569 WIRE (OVERMOLDED)

ELECTRICAL SCHEMATIC - 3 WIRES

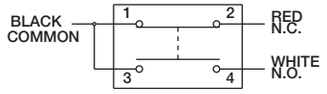

ELECTRICAL SCHEMATIC - 4 WIRES

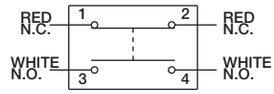

CONTACT MATERIAL

OPTION CODE	CONTACT MATERIAL
Q	Silver (STD)
G	Gold over Silver

TERMINAL SEAL

E EPOXY

All models are epoxy sealed

HARDWARE

HEX NUT

707100201 Nickel-plated

LOCKWASHER

700302202

PANEL GASKET

851D02000

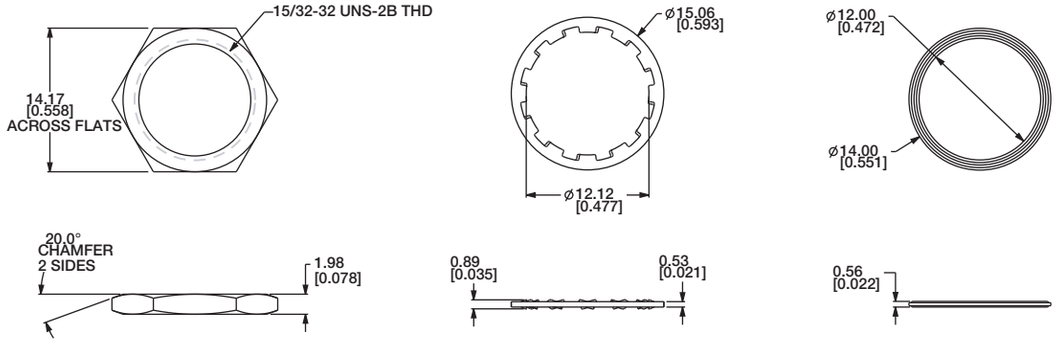

Third Angle Projection

Dimensions are shown: mm (inches)
Specifications and dimensions subject to change

PBA Series
Illuminated Pushbutton

Features/Benefits

- ***Illuminated display***
- ***Small size***
- ***Cold lighting***
- ***Tactile feed back***

Typical Applications

- ***Avionics***

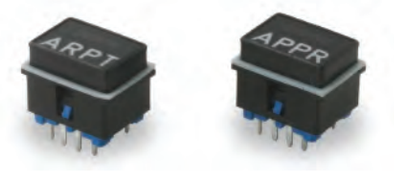

Mechanical

ACTUATION FORCE: 5,5 N ± 0,5 N
MAXIMUM FORCE: 80 N
TRAVEL TO CONTACT: 1,2 ± 0,1 mm
OVERTRAVEL: >0,3 mm
TOTAL TRAVEL: 1,5 ± 0,1 mm
LIFE EXPECTANCY: 10^6 operations 28 V - 10 mA
WEIGHT: 2 grams
VIBRATION: ± 0,45mm from 33 Hz to 75 Hz
ACCELERATION: 10 g max

Electrical

CONTACTS: Gold plated
VOLTAGE: Max 100 V - Min 20 mV DC
CARRYING CURRENT: Max 250 mA - Min 50 µA
SWITCHING CURRENT: Max 50 mA - Min 50 µA
MAX SWITCHING POWER: 1 W
CONTACT RESISTANCE: < 50 Ω
DIELECTRIC STRENGTH: 500 V rms
INSULATION RESISTANCE (100 V): > 5000 M Ω
BOUNCE: < 3 ms
SWITCHING OF 2 POLES MATCHING: < 10 ms

Environmental Data

STORAGE TEMPERATURE: -55˚C TO 85˚C
OPERATING TEMPERATURE: -30˚C TO 85˚C
TEMPERATURE OF KEY TO CAP: < Ambiant +25˚C
HUMIDITY TEST: 21 days (-40˚C - 93% HR)
ALTITUDE PRESSURE: From 20 hPa to 1070 hPa

Soldering Data

WAVE SOLDERING: 260˚C / 5s
MANUAL SOLDERING: 350˚C / 2s
SEALING: According to IP64

Plastic Material

Housing and Cap: UL-94 V0

NOTE: Specifications and materials listed above are for switches with standard options. For information on specific and custom switches, please contact Customer Service.

Build-A-Switch

To order, simply select desired option from each category and place in the appropriate box.

P B A — [ ] — [ ] — [ ] — [ ] — [ ] — Repeat sequence for 2nd Marking — [ ] [ ]

Designation
PBA PBA Series

Size
1 9,5 x 14
2 11,5 x 14
3 14 x 14

Marking Location
H High
M Middle
L Low

Type of Marking
T Text / Legend
S Status Indicator

LED Color
0 White λ
1 Green λ 560 nm
2 Yellow Green λ 568 nm
3 Amber λ 590 nm
4 Red λ 660 nm
5 Other λ

Display Type

		LED Non-Illuminated	LED Illuminated
N	Text Marking	White	LED Color
	Background	Black	Black
S	Text Marking	Not visible	LED Color
	Background	Black	Black
R	Text Marking	White	LED Color
	Background	Red	Red
G	Text Marking	Green	Green
	Background	Black	Black

LED Supply or Type
AC Alternative
DC Direct
XX for each marking
1:6 LEDs in parallel
for direct current

Dimensions are shown: mm (inches)
Specifications and dimensions subject to change

PBA Series
Illuminated Pushbutton

LIGHTING DATA

The legends of function and the status indicator can be illuminated separately.

Color		Amber	Green
Wave Length		586 < λ < 592	555 < l < 560
Current Max		80 mA	80 mA
Chromaticity	X Y	0,54 < X < 0,58 0,40 < Y < 0,44	0,30 < X < 0,40 0,6 < Y
Contrast Min.		1,2	0,85

For other colors and displays, please contact Customer Service.

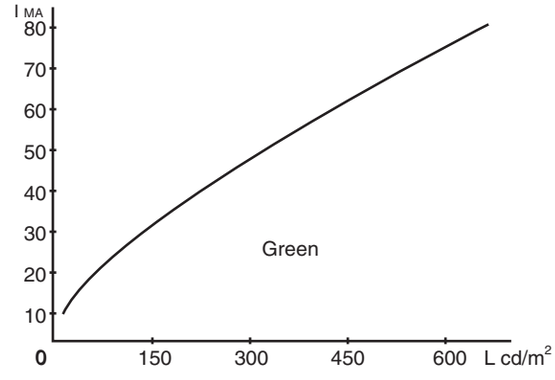

LIGHTING / CURRENT

DIMENSIONS (applicable for any size)

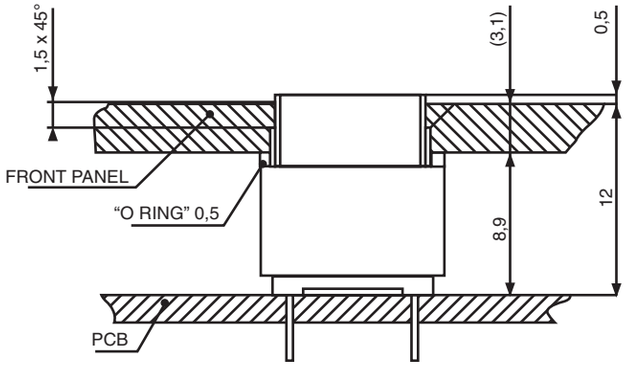

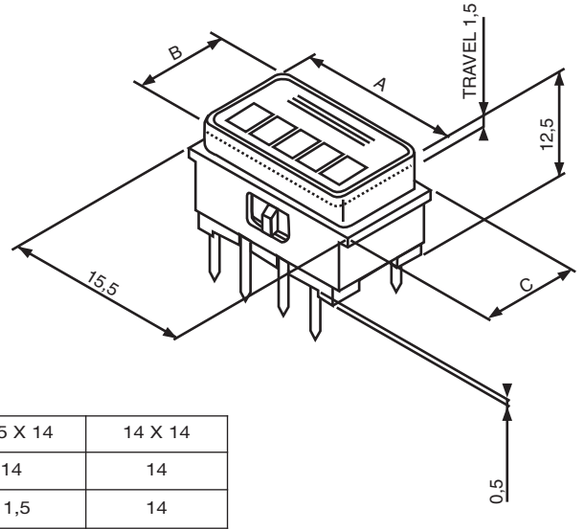

	9,5 X 14	11,5 X 14	14 X 14
A	14	14	14
B	9,5	11,5	14
C	11	11,5	15,5

Tolerance: ± 0,1 mm

Dimensions are shown: mm
Specifications and dimensions subject to change

LED MODULE LAYOUT

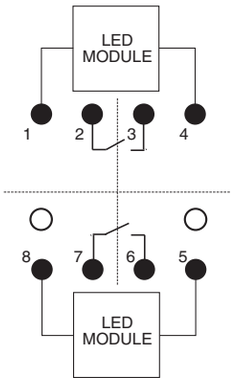

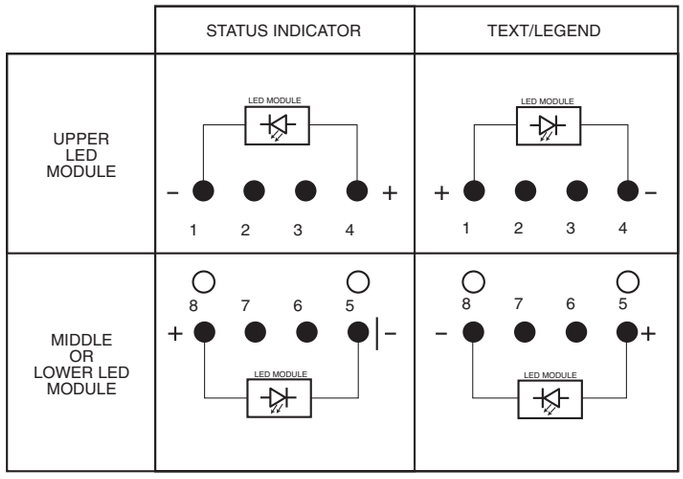

PCB Layout

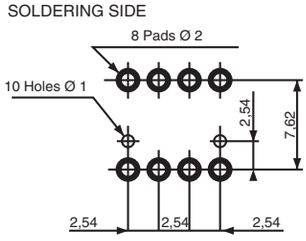

TOLERANCE: ± 0,1

APPLICABLE FOR SIZE
- 9,5 x 14 mm
- 11,5 x 14 mm

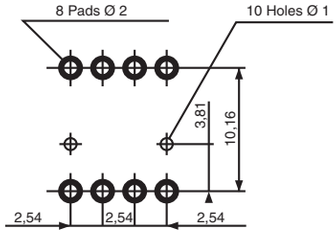

APPLICABLE FOR SIZE
-14 x 14 mm

TACTILE EFFECT

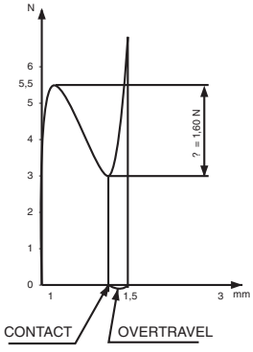

TRAVEL
- TRAVEL TO CONTACT: 1,2 ± 0,1 mm
- OVERTRAVEL: > 0,3 mm
- TOTAL TRAVEL: 1,5 ± 0,1 mm

FORCE
- ACTUATOR FORCE: 5,5 N ± 0,5 N
- TACTILE FEELING: 1,6 N

1 or 2 markings are available in any combination of text / legend or status indicator.

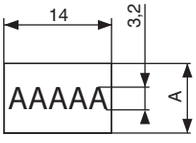

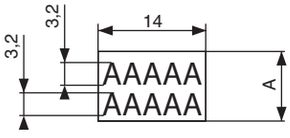

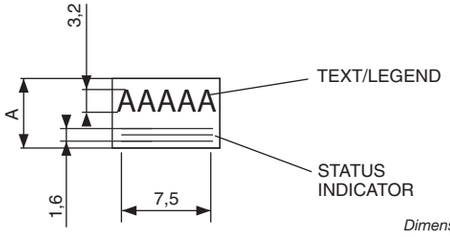

A = 9,5 or 11,5 or 14mm

Dimensions are shown: mm
Specifications and dimensions subject to change

PB Series
Single Pole and Multi-Key Pushbutton Switches

Features/Benefits

- ***Momentary or latching options***
- ***Reliable contact design***
- ***2, 4, and 6 pole configurations***
- ***Long travel and extended life cycles***

Typical Applications

- ***Appliances***
- ***Audio and visual equipment***
- ***Consumer electronics***
- ***Industrial equipment***

Specifications

CONTACT RATING: 0.3A @ 30 VDC

INITIAL CONTACT RESISTANCE: 30 m ohms max.

INSULATION RESISTANCE: 100 M ohms min.

DIELECTRIC STRENGTH: 500 V AC (50-60 Hz) between open terminals and between the frame and terminal.

OPERATING LIFE: 10,000 cycles without load

OPERATING FORCE:
250 ± 100 gf (2.45 ± 0.98N)

LOCK TRAVEL: 2 ± 0.3 mm

TOTAL TRAVEL: 3 ± 0.3 mm

OPERATING TEMPERATURE: -20˚C to 70˚C

Materials

CASE: PC (UL 94HB)

PLASTIC CLIP: POM (UL 94HB)

SPRING: SUS

KNOB: POM

TERMINAL: Silver plated

PB-22D01-L 2PDT LOCK / LATCHING

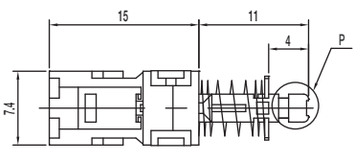

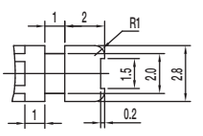

P DETAIL 2 : 1

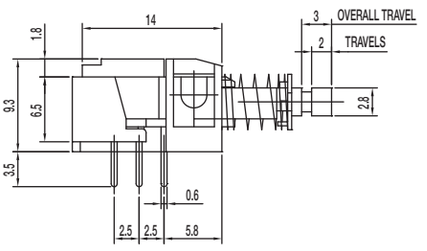

2P — 2T

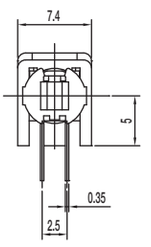

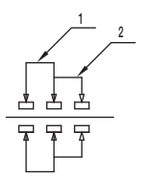

SCHEMATIC

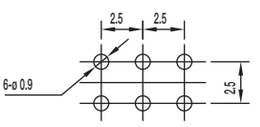

PIERCING PLAN

PB Series
Single Pole and Multi-Key Pushbutton Switches

PB-42D01-L 4PDT LOCK / LATCHING

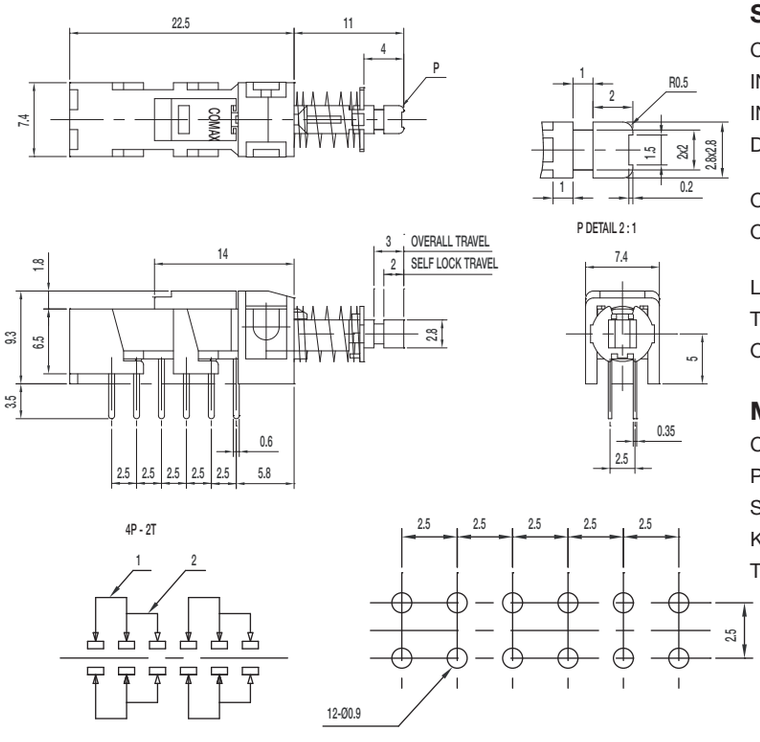

Specifications

CONTACT RATING: 0.3A @ 30 VDC

INITIAL CONTACT RESISTANCE: 30 m ohms max.

INSULATION RESISTANCE: 100 M ohms min.

DIELECTRIC STRENGTH: 500 V AC (50-60 Hz) between open terminals and between the frame and terminal.

OPERATING LIFE: 10,000 cycles without load

OPERATING FORCE:
280 ± 100 gf

LOCK TRAVEL: 2 ± 0.3 mm

TOTAL TRAVEL: 3 ± 0.3 mm

OPERATING TEMPERATURE: -20˚C to 70˚C

Materials

CASE: PC (UL 94HB)

PLASTIC CLIP: POM (UL 94HB)

SPRING: SUS

KNOB: POM

TERMINAL: Silver plated

PB-62D01-L 6PDT LOCK / LATCHING

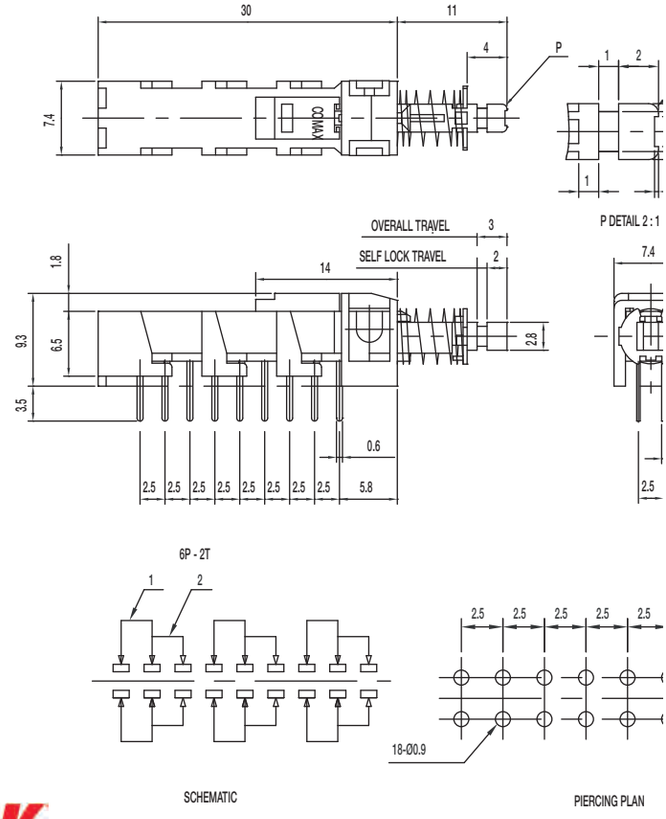

Specifications

CONTACT RATING: 0.3A @ 30 VDC

INITIAL CONTACT RESISTANCE: 30 m ohms max.

INSULATION RESISTANCE: 100 M ohms min.

DIELECTRIC STRENGTH: 500 V AC (50-60 Hz) between open terminals and between the frame and terminal.

OPERATING LIFE: 10,000 cycles without load

OPERATING FORCE:
300 ± 100 gf (2.94 ± 0.98N)

LOCK TRAVEL: 2 ± 0.3 mm

TOTAL TRAVEL: 3 ± 0.3 mm

OPERATING TEMPERATURE: -20˚C to 70˚C

Materials

CASE: PC (UL 94HB)

PLASTIC CLIP: POM (UL 94HB)

SPRING: SUS

KNOB: POM

TERMINAL: Silver plated

Dimensions are shown: mm
Specifications and dimensions subject to change

PB-22D01-F 2PDT NON-LOCK / MOMENTARY

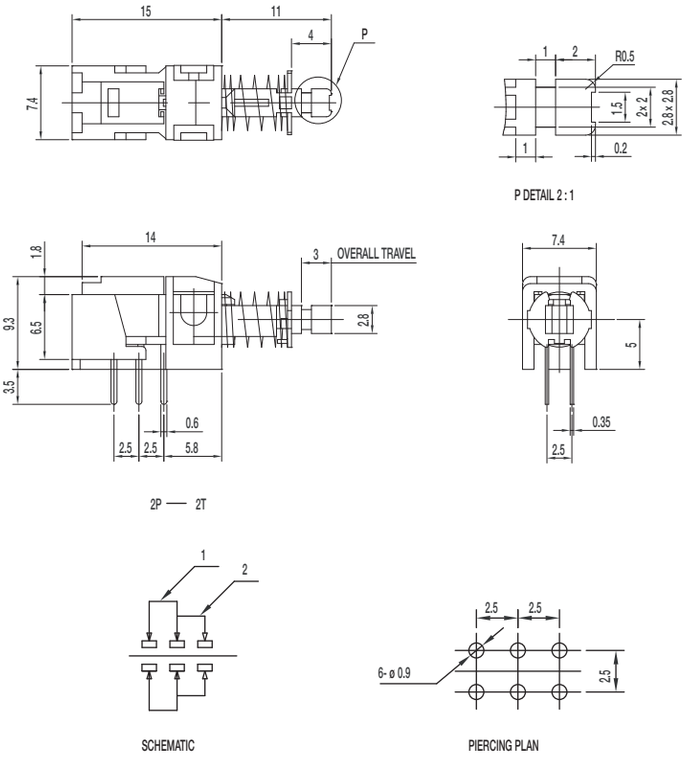

Specifications

CONTACT RATING: 0.3A @ 30 VDC

INITIAL CONTACT RESISTANCE: 30 m ohms max.

INSULATION RESISTANCE: 100 M ohms min.

DIELECTRIC STRENGTH: 500 V AC (50-60 Hz) between open terminals and between the frame and terminal.

OPERATING LIFE: 10,000 cycles without load

OPERATING FORCE:
250 ± 100 gf (2.45 ± 0.98N)

TOTAL TRAVEL: 3 ± 0.3 mm

OPERATING TEMPERATURE: -20˚C to 70˚C

Materials

CASE: PC (UL 94HB)

PLASTIC CLIP: POM (UL 94HB)

SPRING: SUS

KNOB: POM

TERMINAL: Silver plated

PB-42D01-F 4PDT NON-LOCK / MOMENTARY

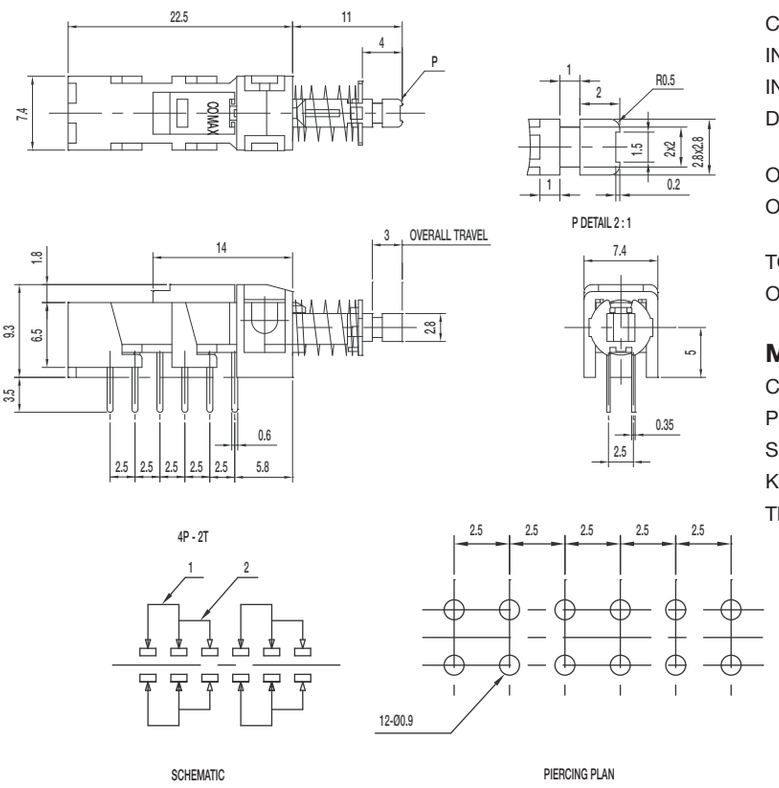

Specifications

CONTACT RATING: 0.3A @ 30 VDC

INITIAL CONTACT RESISTANCE: 30 m ohms max.

INSULATION RESISTANCE: 100 M ohms min.

DIELECTRIC STRENGTH: 500 V AC (50-60 Hz) between open terminals and between the frame and terminal.

OPERATING LIFE: 10,000 cycles without load

OPERATING FORCE:
280 ± 100 gf (2.477 ± 0.98N)

TOTAL TRAVEL: 3 ± 0.3 mm

OPERATING TEMPERATURE: -20˚C to 70˚C

Materials

CASE: PC (UL 94HB)

PLASTIC CLIP: POM (UL 94HB)

SPRING: SUS

KNOB: POM

TERMINAL: Silver plated

PB Series
Single Pole and Multi-Key Pushbutton Switches

PB-62D01-F 6PDT NON-LOCK / MOMENTARY

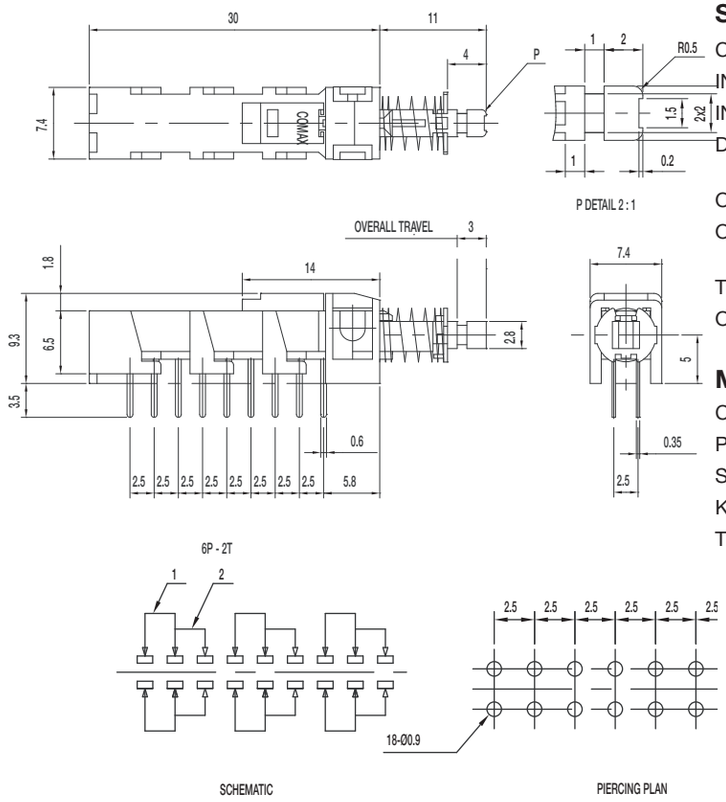

Specifications

CONTACT RATING: 0.3A @ 30 VDC

INITIAL CONTACT RESISTANCE: 30 m ohms max.

INSULATION RESISTANCE: 100 M ohms min.

DIELECTRIC STRENGTH: 500 V AC (50-60 Hz) between open terminals and between the frame and terminal.

OPERATING LIFE: 10,000 cycles without load

OPERATING FORCE:
300 ± 100 gf (2.94 ± 0.98N)

TOTAL TRAVEL: 3 ± 0.3 mm

OPERATING TEMPERATURE: -20˚C to 70˚C

Materials

CASE: PC (UL 94HB)

PLASTIC CLIP: POM (UL 94HB)

SPRING: SUS

KNOB: POM

TERMINAL: Silver plated

PB-22G02-L 2PDT LOCK / LATCHING

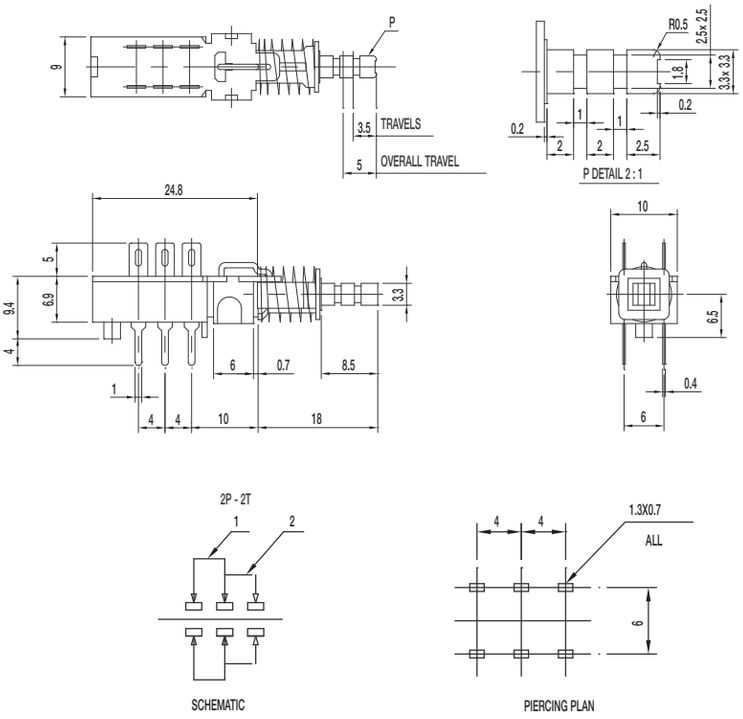

Specifications

CONTACT RATING: 1A @ 25 VDC

INITIAL CONTACT RESISTANCE: 30 m ohms max.

INSULATION RESISTANCE: 100 M ohms min.

DIELECTRIC STRENGTH: 500 V AC (50-60 Hz) between open terminals and between the frame and terminal.

OPERATING LIFE: 10,000 cycles without load

OPERATING FORCE:
350 ± 150 gf (3.43 ± 1.47N)

LOCK TRAVEL: 3.5 ± 0.3mm

TOTAL TRAVEL: 5 ± 0.3 mm

OPERATING TEMPERATURE: -20˚C to 70˚C

Materials

CASE: PC (UL 94HB)

SPRING: SUS

KNOB: POM

TERMINAL: Silver plated

PB-42G02-L 4PDT LOCK / LATCHING

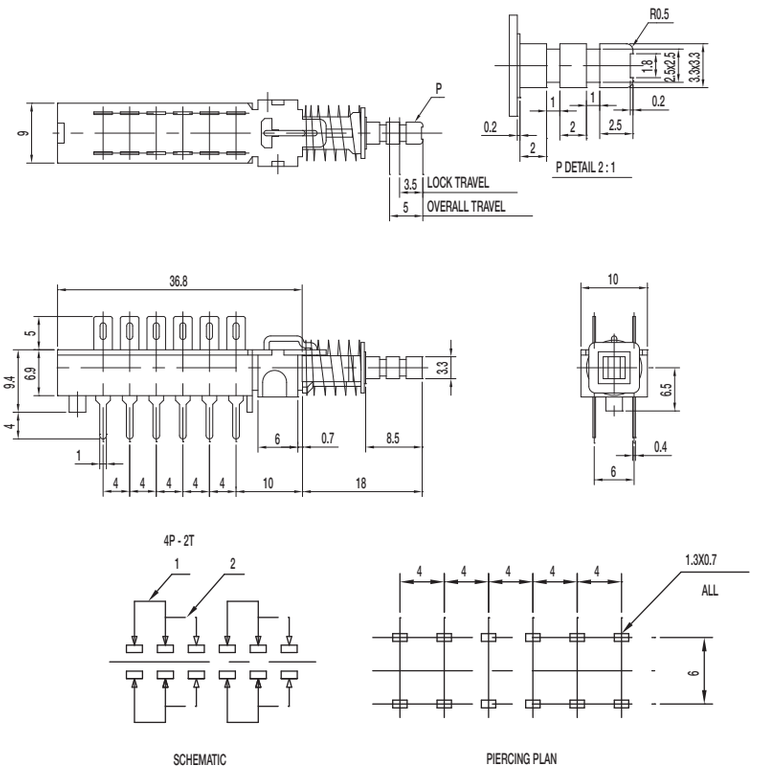

Specifications

CONTACT RATING: 1A @ 25 VDC

INITIAL CONTACT RESISTANCE: 30 m ohms max.

INSULATION RESISTANCE: 100 M ohms min.

DIELECTRIC STRENGTH: 500 V AC (50-60 Hz) between open terminals and between the frame and terminal.

OPERATING LIFE: 10,000 cycles without load

OPERATING FORCE:
400 ± 150 gf (3.92 ± 1.47N)

LOCK TRAVEL: 3.5 ± 0.3mm

TOTAL TRAVEL: 5 ± 0.3 mm

OPERATING TEMPERATURE: -20˚C to 70˚C

Materials

HOUSING: PC (UL 94HB)

SPRING: SUS

KNOB: POM

TERMINAL: Silver plated

PB-62G02-L DPDT LOCK / LATCHING

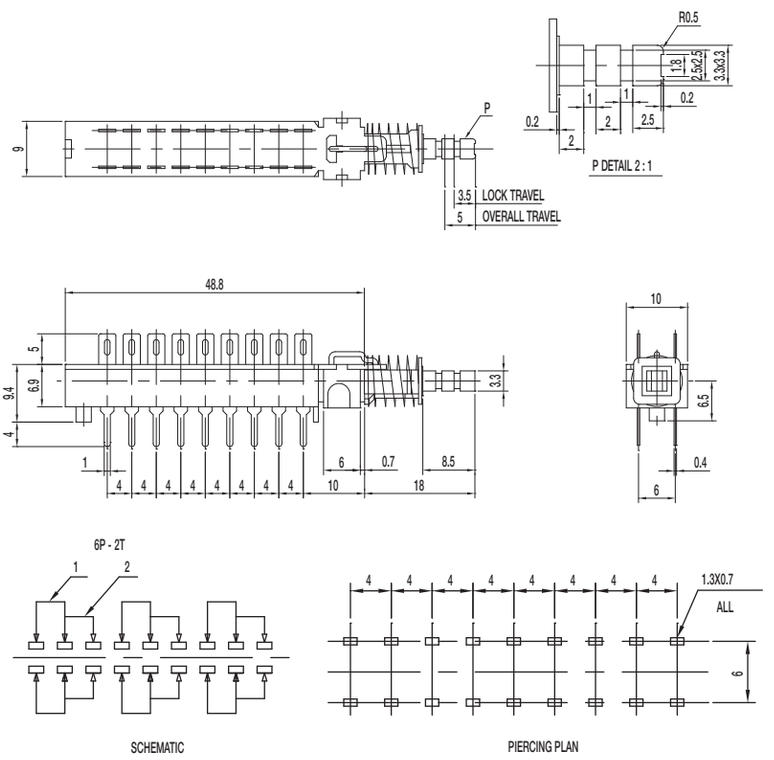

Specifications

CONTACT RATING: 1A @ 25 VDC

INITIAL CONTACT RESISTANCE: 30 m ohms max.

INSULATION RESISTANCE: 100 M ohms min.

DIELECTRIC STRENGTH: 500 V AC (50-60 Hz) between open terminals and between the frame and terminal.

OPERATING LIFE: 10,000 cycles without load

OPERATING FORCE:
450 ± 150 gf

LOCK TRAVEL: 3.5 ± 0.3mm

TOTAL TRAVEL: 5 ± 0.3 mm

OPERATING TEMPERATURE: -20˚C to 70˚C

Materials

HOUSING: PC (UL 94HB)

SPRING: SUS

KNOB: POM

TERMINAL: Silver plated

PB Series
Single Pole and Multi-Key Pushbutton Switches

PB-22G02-F DPDT NON-LOCK / MOMENTARY

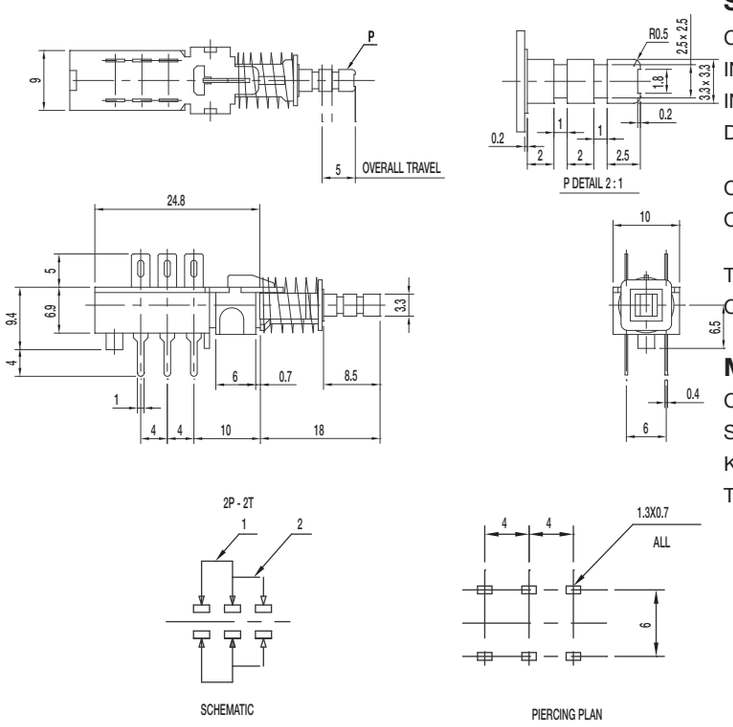

Specifications

CONTACT RATING: 1A @ 25 VDC

INITIAL CONTACT RESISTANCE: 30 m ohms max.

INSULATION RESISTANCE: 100 M ohms min.

DIELECTRIC STRENGTH: 500 V AC (50-60 Hz) between open terminals and between the frame and terminal.

OPERATING LIFE: 10,000 cycles without load

OPERATING FORCE:
350 ± 150 gf (3.43 ± 1.47N)

TOTAL TRAVEL: 5 ± 0.3 mm

OPERATING TEMPERATURE: -20˚C to 70˚C

Materials

CASE: PC (UL 94HB)

SPRING: SUS

KNOB: POM

TERMINAL: Silver plated

PB-42G02-F 4PDT NON-LOCK / MOMENTARY

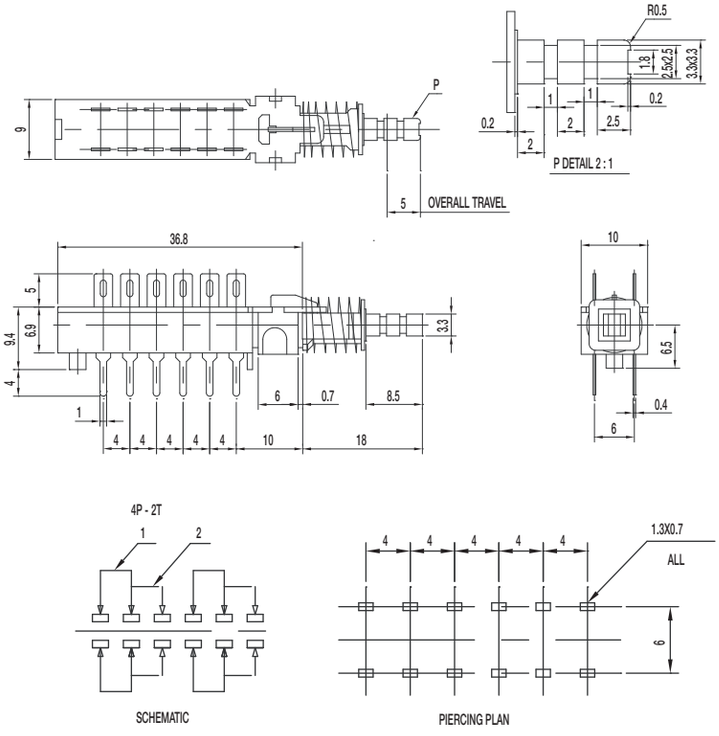

Specifications

CONTACT RATING: 1A @ 25 VDC

INITIAL CONTACT RESISTANCE: 30 m ohms max.

INSULATION RESISTANCE: 100 M ohms min.

DIELECTRIC STRENGTH: 500 V AC (50-60 Hz) between open terminals and between the frame and terminal.

OPERATING LIFE: 10,000 cycles without load

OPERATING FORCE:
400 ± 150 gf (3.92 ± 1.47N)

TOTAL TRAVEL: 5 ± 0.3 mm

OPERATING TEMPERATURE: -20˚C to 70˚C

Materials

HOUSING: PC (UL 94HB)

SPRING: SUS

KNOB: POM

TERMINAL: Silver plated

PB-62G02-F 6PDT NON-LOCK / MOMENTARY

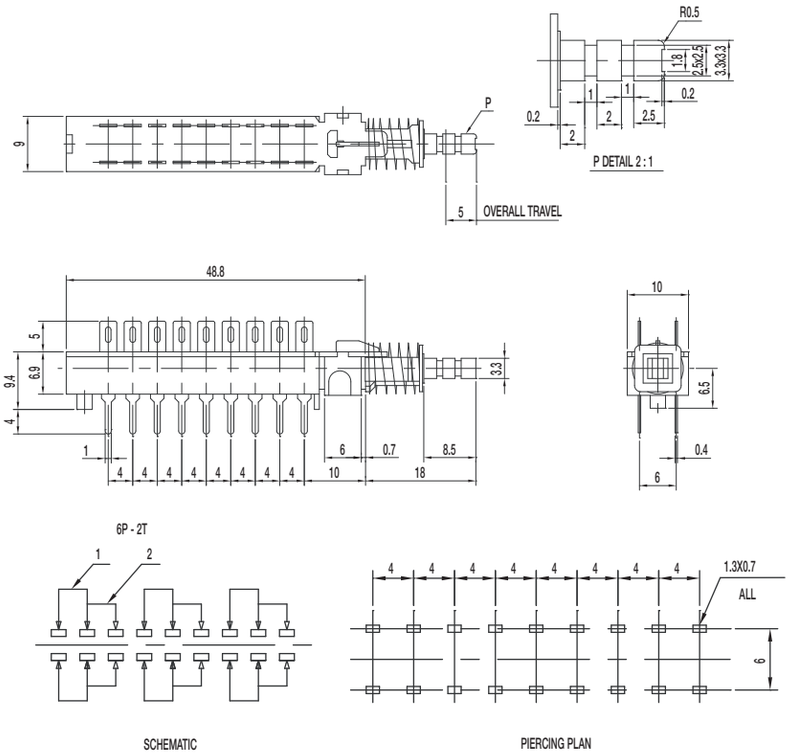

Specifications

CONTACT RATING: 1A @ 25 VDC

INITIAL CONTACT RESISTANCE: 30 m ohms max.

INSULATION RESISTANCE: 100 M ohms min.

DIELECTRIC STRENGTH: 500 V AC (50-60 Hz) between open terminals and between the frame and terminal.

OPERATING LIFE: 10,000 cycles without load

OPERATING FORCE:
450 ± 150 gf (4.41 ± 1.47N)

TOTAL TRAVEL: 5 ± 0.3 mm

OPERATING TEMPERATURE: -20˚C to 70˚C

Materials

HOUSING: PC (UL 94HB)

SPRING: SUS

KNOB: POM

TERMINAL: Silver plated

PB Multi-Key Series

P B — K — — — — — — — —

Key
- **1K** 1K
- **2K** 2K
- **3K** 3K
- **4K** 4K
- **5K** 5K

Travel
- **G** 3.5 mm
- **D** 2 mm

Key Pitch
- **0** 0
- **1** 10
- **2** 12.5
- **3** 15
- **4** 17.5
- **5** 20
- **6** 25
- **7** 30

Mounting Hole
- **A** M3 x 0.5
- **B** 3.2
- **C** No mounting hole

Poles
- **2** 2 poles
- **4** 4 poles
- **6** 6 poles

Operating Type
- **E** Release
- **F** Non-lock
- **L** Self-lock
- **T** Interlock
- **XF** All non-lock
- **XT** All self-lock
- **XL** All interlock

Terminal Shape
- **P**
- **X**
- **N**

Contact Function
- **S** Shorting
- **NS** Non-shorting

Dimensions are shown: mm
Specifications and dimensions subject to change

PB Series
Single Pole and Multi-Key Pushbutton Switches

PB Multi-Key Series

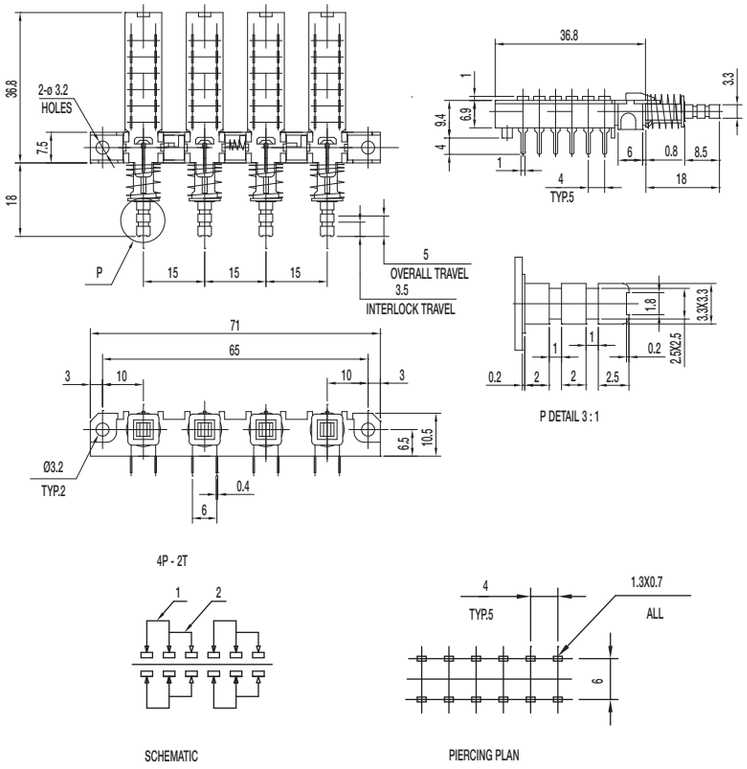

Specifications

CONTACT RATING: 0.3A @ 30 VDC

INITIAL CONTACT RESISTANCE: 30 m ohms max.

INSULATION RESISTANCE: 100 M ohms min.

DIELECTRIC STRENGTH: 500 V AC (50-60 Hz) between open terminals and between the frame and terminal.

OPERATING LIFE: 10,000 cycles without load

OPERATING FORCE:
250 ± 100 gf (2.45 ± 0.98N)

TOTAL TRAVEL: 3 ± 0.3 mm

OPERATING TEMPERATURE: -20˚C to 70˚C

Materials

CASE: PC (UL 94HB)

PLASTIC CLIP: POM (UL 94HB)

SPRING: SUS

KNOB: POM

TERMINAL: Silver plated

PS-12G Series
Pushbutton Switches

Features/Benefits

- ***Latching pushbutton***
- ***Non-shorting with lock***
- ***5 mm travel***
- ***SPDT***

Typical Applications

- ***Automotive interior lighting***
- ***Computer peripherals***
- ***Appliances***

PART NUMBER	PACKAGING	SCHEMATIC
PS-12G01	200 pieces	

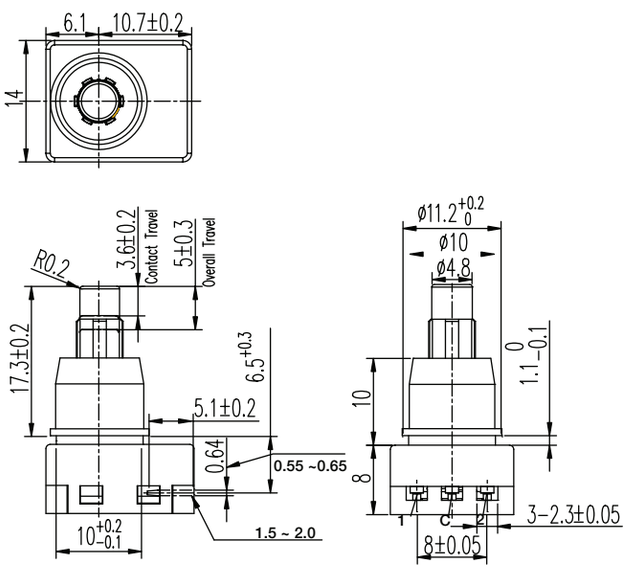

Dimensions

FOOTPRINT: 14 X 16.8 mm

HEIGHT: 18 mm

Specifications

CONTACT RATING: 1A @ 14 VDC

INITIAL CONTACT RESISTANCE: 100 m ohms max.

INSULATION RESISTANCE: 100 M ohms min.

DIELECTRIC STRENGTH: 500 V AC (50-60 Hz) between open terminals and between the frame and terminal.

OPERATING LIFE: 20,000 cycles with load

OPERATING FORCE: 400 ± 100 gf

OPERATING POSITION: 3.6 ± 0.2 mm

TOTAL TRAVEL: 5 ± 0.3 mm

OPERATING TEMPERATURE: -20˚C to 70˚C

Materials

KNOB: POM (UL 94HB)

HOUSING: PBT (UL 94V-0)

COVER: PBT (UL 94V-0)

ROTOR: PBT (UL 94V-0)

SLIDER: POM (UL 94HB)

TERMINAL: Phospher bronze, silver plated

SPRING: Stainless steel

CONTACT: Phospher bronze, silver plated

PS-12G Series
Pushbutton Switches

PART NUMBER	PACKAGING	SCHEMATIC
PS-12G03	200 pieces	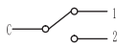

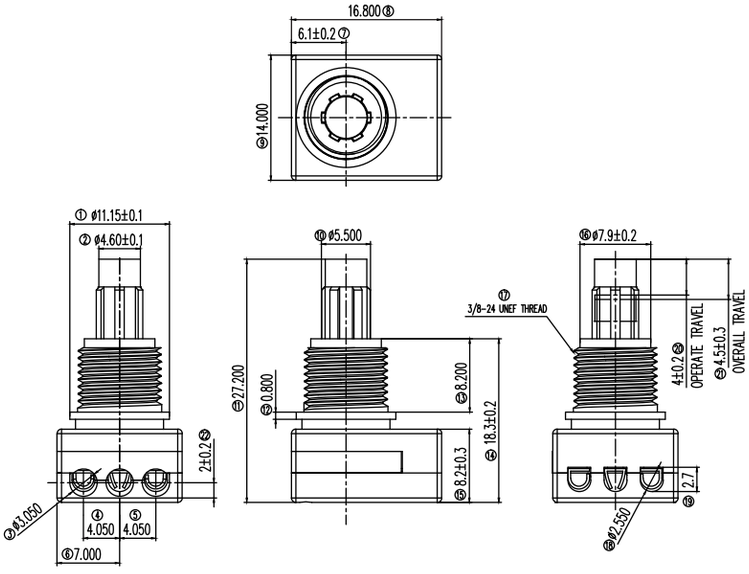

TYCO .062 Commercial Pin
and Socket Connector
PT# 770983-1

Dimensions

FOOTPRINT: 14 X 16.8 mm

HEIGHT: 18.3 mm

Specifications

CONTACT RATING: 2.2A @ 14.5 VDC

INITIAL CONTACT RESISTANCE: 50 m ohms max.

INSULATION RESISTANCE: 100 M ohms min.

DIELECTRIC STRENGTH: 500 V AC (50-60 Hz) between open terminals and between the frame and terminal.

OPERATING LIFE: 20,000 cycles with load

OPERATING FORCE: 650 ± 300 gf

OPERATING POSITION: 4.00 ± 0.2 mm

TOTAL TRAVEL: 4.5 ± 0.3 mm

OPERATING TEMPERATURE: -40˚C to 85˚C

Materials

KNOB: POM (UL 94HB)

HOUSING: PBT & PA (UL 94V-0)

COVER: PBT (UL 94V-0)

ROTOR: PBT (UL 94V-0)

SLIDER: POM (UL 94HB)

TERMINAL: Brass, silver plated

SPRING: Stainless steel

CONTACT: Phospher bronze, silver plated

PS-22 Series
Subminiature Pushbutton Switches

Features/Benefits

- ***Compact miniature push switch***
- ***Momentary or latching options***
- ***Shorting or non-shorting***
- ***DPDT***

Typical Applications

- ***Industrial***
- ***Automotive***
- ***Audio and visual equipment***

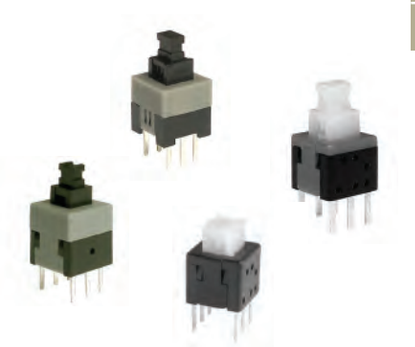

PART NUMBER	PACKAGING	SCHEMATIC
PS-2203-L NS PA	1,000 pieces	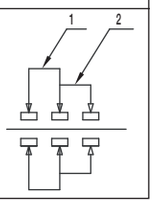
PS-2203-F NS PA	1,000 pieces	

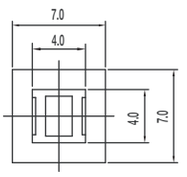

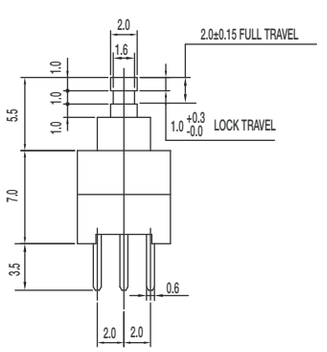

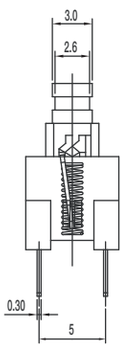

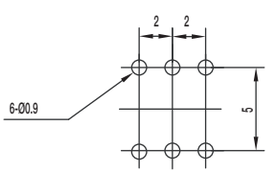

PIERCING PLAN

Dimensions

FOOTPRINT: 7.0 x 7.0 mm

HEIGHT: 12.5 mm

Specifications

CONTACT RATING: 0.1A @ 30 VDC

INITIAL CONTACT RESISTANCE: 30 m ohms max.

INSULATION RESISTANCE: 100 M ohms min.

DIELECTRIC STRENGTH: 500 V AC (50-60 Hz) between open terminals and between the frame and terminal.

OPERATING LIFE: 10,000 cycles with load

OPERATING FORCE:
200 ± 100 gf (1.96 ± 0.98N)

LOCK TRAVEL: 1 mm

TOTAL TRAVEL: 2 mm

OPERATING TEMPERATURE: -20˚C to 70˚C

Materials

KNOB: POM Black

HOUSING: PA Black

COVER: POM Grey (latch) / White (Mom)

TERMINAL: Brass, silver plated

CONTACT CLIP: Phosphor bronze., silver plated

SPRING: Stainless steel

HOOK LOCK: Stainless steel (latch)

PS-22 Series
Subminiature Pushbutton Switches

PART NUMBER	PACKAGING	SCHEMATIC
PS-2206-L NS PA	1,000 pieces	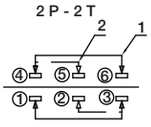
PS-2206-F NS PA	1,000 pieces	

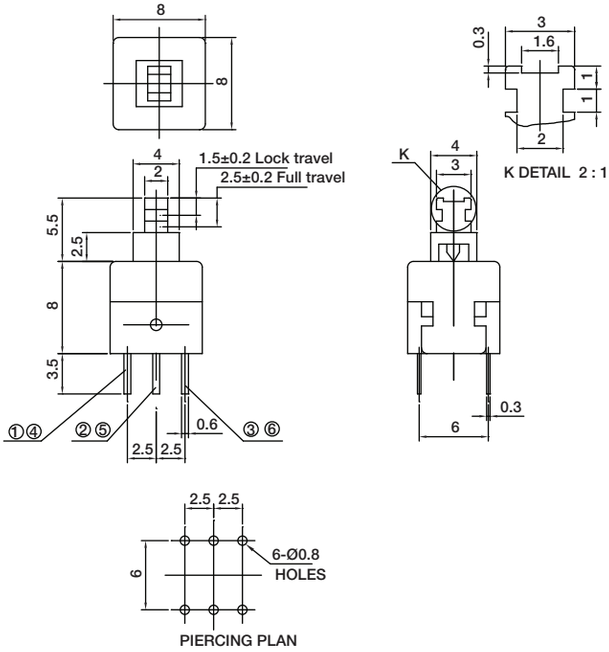

Dimensions

FOOTPRINT: 8.0 x 8.0 mm

HEIGHT: 13.5 mm

Specifications

CONTACT RATING: 0.1A @ 30 VDC

INITIAL CONTACT RESISTANCE: 70 m ohms max.

INSULATION RESISTANCE: 100 M ohms min.

DIELECTRIC STRENGTH: 500 V AC (50-60 Hz) between open terminals and between the frame and terminal.

OPERATING LIFE: 10,000 cycles with load

OPERATING FORCE:
200 ± 100 gf (1.96 ± 0.98N)

LOCK TRAVEL: 1.5 mm

TOTAL TRAVEL: 2.5 mm

OPERATING TEMPERATURE: -20˚C to 70˚C

Materials

KNOB: POM Black

HOUSING: PA Black

COVER: POM Grey (latch) / White (Mom)

TERMINAL: Brass, silver plated

CONTACT CLIP: Phosphor bronze., silver plated

SPRING: Stainless steel

HOOK LOCK: Stainless steel (latch)

PART NUMBER	PACKAGING	SCHEMATIC
PS-2214-L NS PA	1,000 pieces	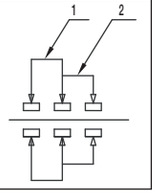
PS-2214-F NS PA	1,000 pieces	

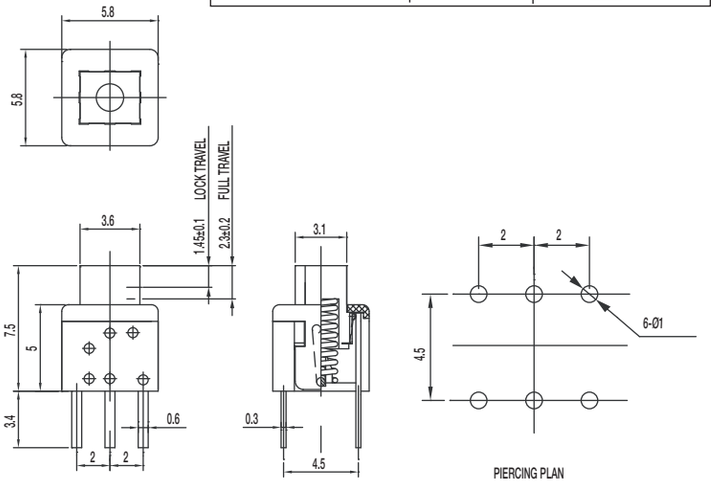

Dimensions

FOOTPRINT: 5.8 x 5.8 mm

HEIGHT: 7.5 mm

Specifications

CONTACT RATING: 0.1A @ 30 VDC

INITIAL CONTACT RESISTANCE: 80 m ohms max.

INSULATION RESISTANCE: 100 M ohms min.

DIELECTRIC STRENGTH: 500 V AC (50-60 Hz) between open terminals and between the frame and terminal.

OPERATING LIFE: 10,000 cycles with load

OPERATING FORCE:
150 ± 50 gf (1.47 ± 0.49N)

LOCK TRAVEL: 1.45 mm

TOTAL TRAVEL: 2.3 mm

OPERATING TEMPERATURE: -20˚C to 70˚C

Materials

KNOB: POM Natural (latch) / PA black

HOUSING: PA Black

COVER: PA Black

TERMINAL: Brass, silver plated

CONTACT CLIP: Phosphor bronze, silver clad

SPRING: Stainless steel

HOOK LOCK: Stainless steel (latch)

Dimensions are shown: mm
Specifications and dimensions subject to change

PS-22 Series
Subminiature Pushbutton Switches

PART NUMBER	PACKAGING	SCHEMATIC
PS-221605-L NS	1,000 pieces	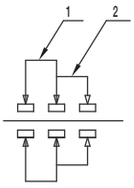
PS-221605-F NS	1,000 pieces	

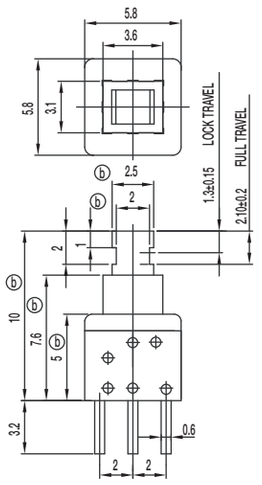

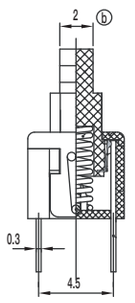

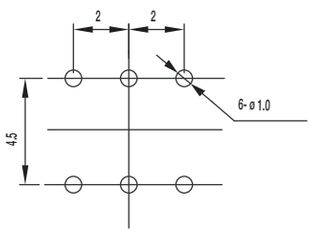

PIERCING PLAN

Dimensions

FOOTPRINT: 5.8 x 5.8 mm

HEIGHT: 10 mm

Specifications

CONTACT RATING: 0.1A @ 30 VDC / 2A @ 2 VDC

INITIAL CONTACT RESISTANCE: 80 m ohms max.

INSULATION RESISTANCE: 100 M ohms min.

DIELECTRIC STRENGTH: 500 V AC (50-60 Hz) between open terminals and between the frame and terminal.

OPERATING LIFE: 10,000 cycles with load

OPERATING FORCE:
150 ± 50 gf (1.47 ± 0.49N)

LOCK TRAVEL: 1.3 mm

TOTAL TRAVEL: 2.1 mm

OPERATING TEMPERATURE: -20˚C to 70˚C

Materials

KNOB: POM Natural

HOUSING: PA Black

COVER: PC Grey

TERMINAL: Bras, silver plated

CONTACT CLIP: Phosphor bronze, silver clad

SPRING: Stainless steel

HOOK LOCK: Stainless steel (latch)

PS Series
Miniature Pushbutton Switches

Features/Benefits

- ***Miniature size***
- ***Momentary or latching options***
- ***Broad range of products***

Typical Applications

- ***Industrial***
- ***Automotive***
- ***Audio and visual equipment***
- ***Telecommunications***

PS-22I05 DPDT NON-SHORTING

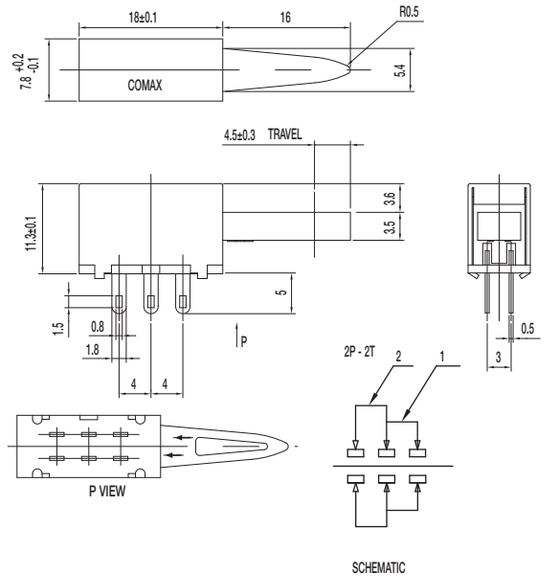

Specifications

CONTACT RATING: 0.3A @ 30 VDC

INITIAL CONTACT RESISTANCE: 30 m ohms max.

INSULATION RESISTANCE: 100 M ohms min.

DIELECTRIC STRENGTH: 500 V AC (50-60 Hz) between open terminals and between the frame and terminal.

OPERATING LIFE: 10,000 cycles with load

OPERATING FORCE: 400 ± 150 gf (3.92 ± 1.47N)

TOTAL TRAVEL: 4.5 ± 0.3 mm

OPERATING TEMPERATURE: -20˚C to 70˚C

Materials

FRAME: SECC

KNOB: POM (UL 94HB)

CONTACT PLATE: Silver clad

SPRING: SUS

TERMINAL: Silver plated

PS-12C02-F NS SPST NON-SHORTING

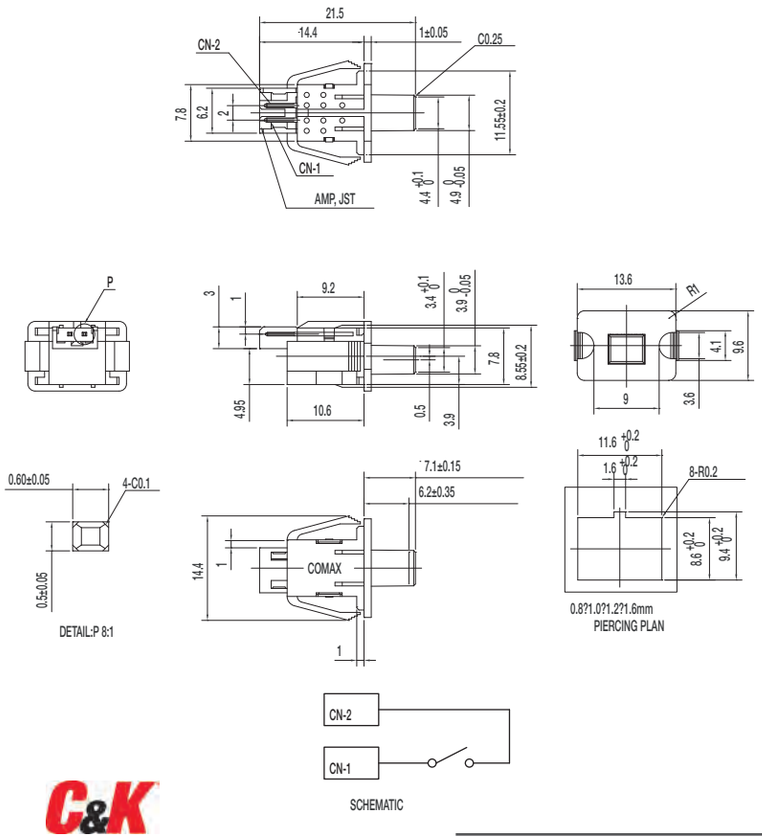

Specifications

CONTACT RATING: 100 µ A @ 3 VDC min. / 10mA @ 5 VDC max

INITIAL CONTACT RESISTANCE: 100 m ohms max.

INSULATION RESISTANCE: 100 M ohms min.

DIELECTRIC STRENGTH: 250 V AC (50-60 Hz) between open terminals and between the frame and terminal.

OPERATING LIFE: 100,000 cycles with load

OPERATING FORCE: 50 ± 15 gf (0.49 ± 0.147N)

PRE-TRAVEL: 6.20 ± 0.35 mm

OPERATING TEMPERATURE: -40˚C to 85˚C

Materials

KNOB: POM (UL 94HB)

COVER: PA (UL 94V-0)

HOUSING: PA (UL 94V-0)

SPRING: SUS

TERMINAL: Silver plated

Dimensions are shown: mm
Specifications and dimensions subject to change

PS-32C02-F NS 1P3T NON-SHORTING

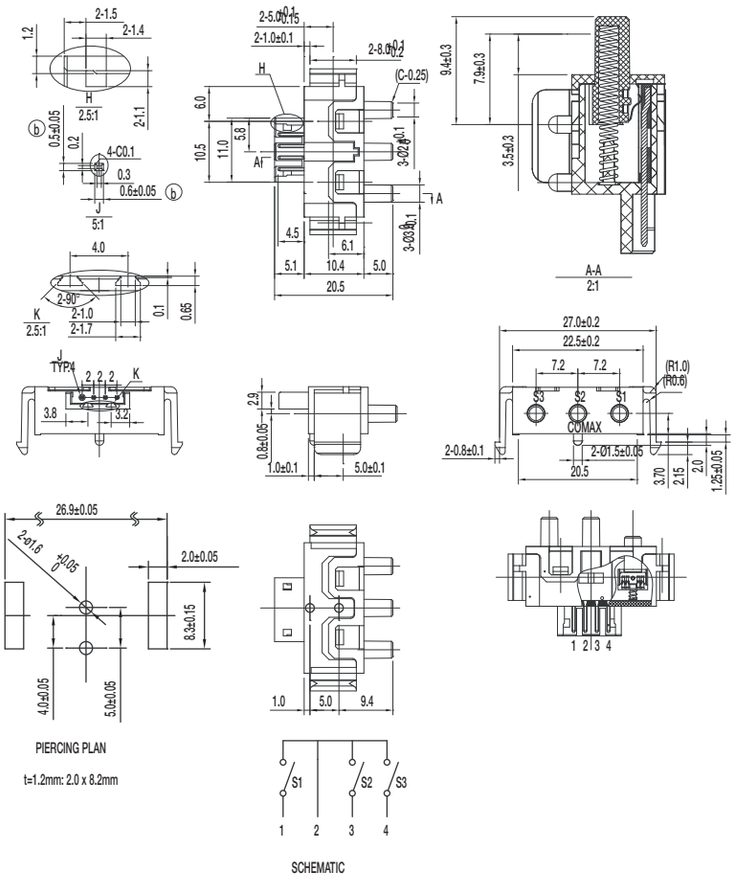

Specifications

CONTACT RATING: 100 µ A @ 3 VDC min. / 10mA @ 5 VDC max

INITIAL CONTACT RESISTANCE: 100 m ohms max.

INSULATION RESISTANCE: 100 M ohms min.

DIELECTRIC STRENGTH: 250 V AC (50-60 Hz) between open terminals and between the frame and terminal.

OPERATING LIFE: 100,000 cycles with load

OPERATING FORCE: 80 ± 20 gf (0.784 ± 0.196N)

PRE-TRAVEL: 1.5 ± 0.3 mm

OVER-TRAVEL: 3.5 ± 0.3 mm

TOTAL TRAVEL: 5 ± 0.3 mm

OPERATING TEMPERATURE: -20˚C to 65˚C

Materials

KNOB: POM (UL 94HB)

COVER: PA (UL 94V-0)

HOUSING: PA (UL 94V-0)

SPRING: SUS

TERMINAL: Silver plated

PS-42C02-F NS 1P4T NON-SHORTING

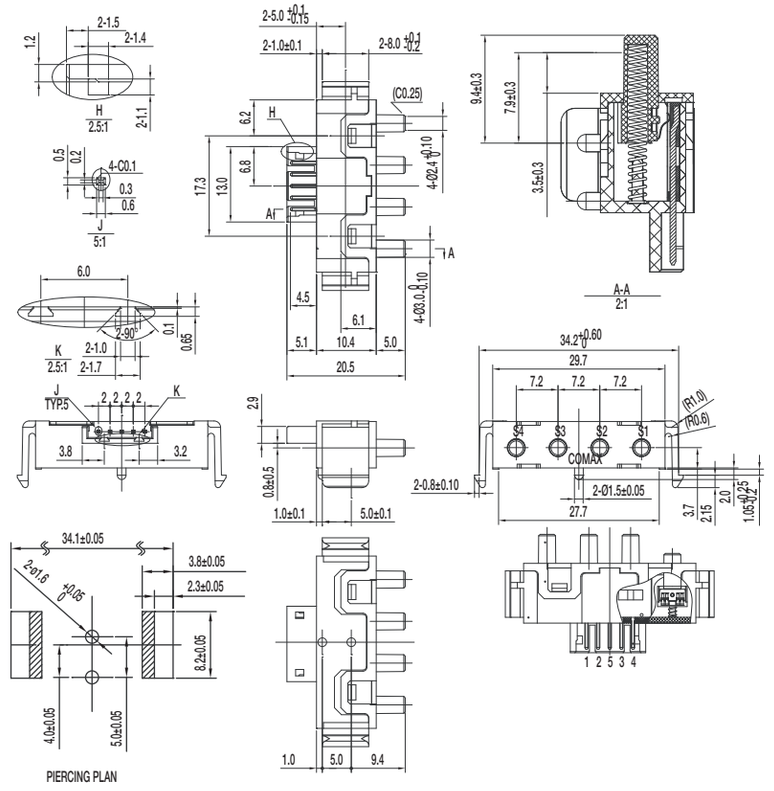

Specifications

CONTACT RATING: 100 µ A @ 3 VDC min. / 10mA @ 5 VDC max

INITIAL CONTACT RESISTANCE: 100 m ohms max.

INSULATION RESISTANCE: 100 M ohms min.

DIELECTRIC STRENGTH: 250 V AC (50-60 Hz) between open terminals and between the frame and terminal.

OPERATING LIFE: 100,000 cycles with load

OPERATING FORCE: 80 ± 20 gf (0.784 ± 0.196N)

PRE-TRAVEL: 1.5 ± 0.3 mm

OVER-TRAVEL: 3.5 ± 0.3 mm

TOTAL TRAVEL: 5 ± 0.3 mm

OPERATING TEMPERATURE: -20˚C to 65˚C

Materials

KNOB: POM (UL 94HB)

COVER: PA (UL 94V-0)

HOUSING: PA (UL 94V-0)

SPRING: SUS

TERMINAL: Silver plated

Dimensions are shown: mm
Specifications and dimensions subject to change

PS Series
Miniature Pushbutton Switches

PS-22C08-G10 NS DPDT NON-SHORTING

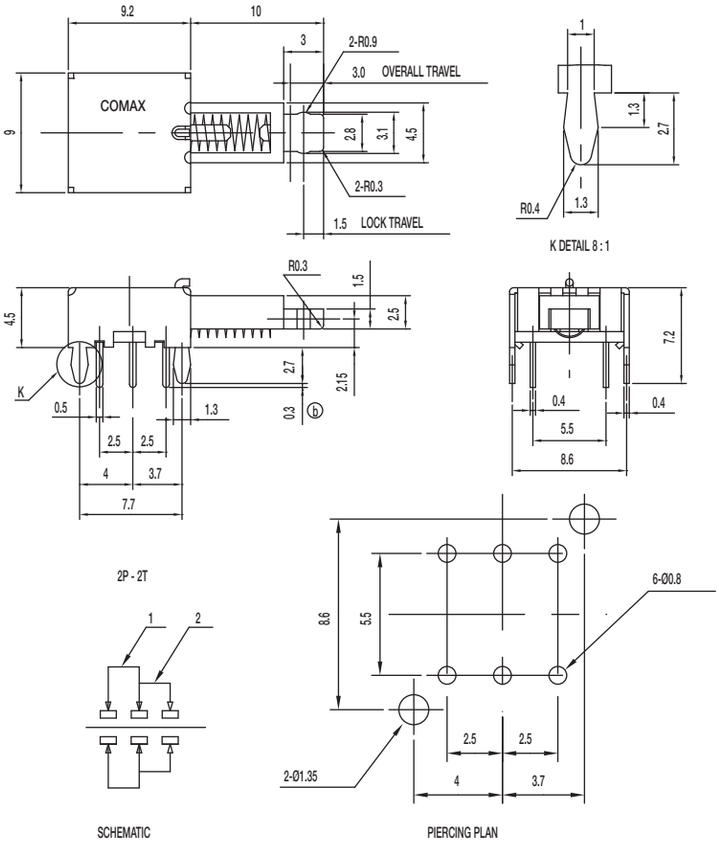

Specifications

CONTACT RATING: 0.3A @ 30 VDC
INITIAL CONTACT RESISTANCE: 30 m ohms max.
INSULATION RESISTANCE: 100 M ohms min.
DIELECTRIC STRENGTH: 500 V AC (50-60 Hz) between open terminals and between the frame and terminal.
OPERATING LIFE: 10,000 cycles without load
OPERATING FORCE: 200 ± 100 gf (1.96 ± 0.98N)
LOCK TRAVEL: 1.5 ± 0.3 mm
OVER-TRAVEL: 3 ± 0.3 mm
OPERATING TEMPERATURE: -20˚C to 70˚C

Materials

FRAME: SPCC
KNOB: POM (UL 94HB)
CONTACT: Silver plated
SPRING: SUS
TERMINAL: Silver plated

PS-22E08-G10 NS DPDT NON-SHORTING

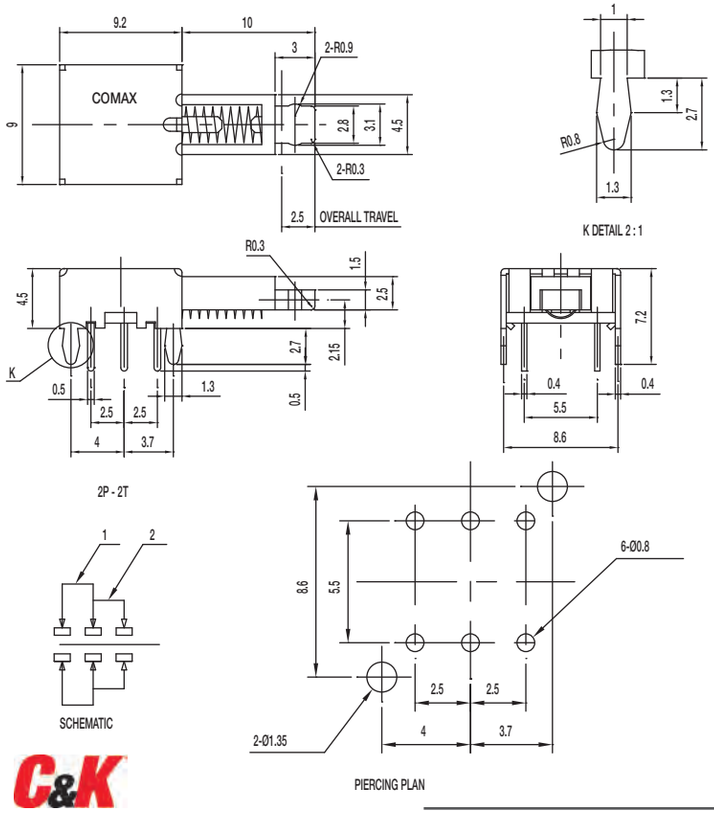

Specifications

CONTACT RATING: 0.3A @ 30 VDC
INITIAL CONTACT RESISTANCE: 30 m ohms max.
INSULATION RESISTANCE: 100 M ohms min.
DIELECTRIC STRENGTH: 500 V AC (50-60 Hz) between open terminals and between the frame and terminal.
OPERATING LIFE: 10,000 cycles without load
OPERATING FORCE: 200 ± 100 gf (1.96 ± 0.98N)
TOTAL TRAVEL: 2.5 ± 0.3 mm
OPERATING TEMPERATURE: -20˚C to 70˚C

Materials

FRAME: SPCC
KNOB: POM (UL 94HB)
CONTACT: Silver plated
SPRING: SUS
TERMINAL: Silver plated

Dimensions are shown: mm
Specifications and dimensions subject to change

PS-22E09-G 4.5 NS DPDT NON-SHORTING

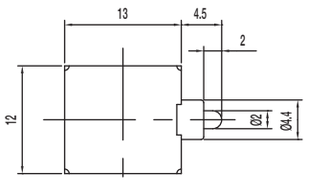

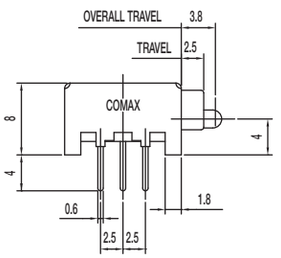

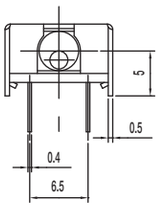

2P - 2T

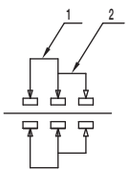

SCHEMATIC

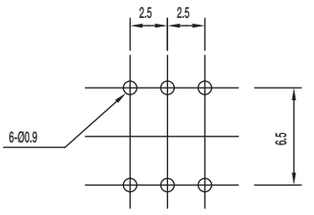

PIERCING PLAN

Specifications

CONTACT RATING: 0.3A @ 30 VDC
INITIAL CONTACT RESISTANCE: 30 m ohms max.
INSULATION RESISTANCE: 100 M ohms min.
DIELECTRIC STRENGTH: 500 V AC (50-60 Hz) between open terminals and between the frame and terminal.
OPERATING LIFE: 10,000 cycles with load
OPERATING FORCE: 70 ± 20 gf (0.686 ± 0.196N)
TRAVEL: 2.5 ± 0.3 mm
TOTAL TRAVEL: 3.8 ± 0.3 mm
OPERATING TEMPERATURE: -20˚C to 70˚C

Materials

FRAME: SPCC
KNOB: POM (UL 94HB)
CONTACT: Silver plated
SPRING: SUS
TERMINAL: Silver plated

PS-42D09-NS 4P2T NON-SHORTING

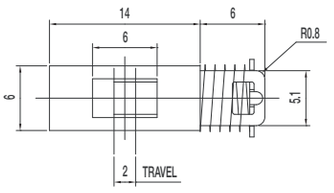

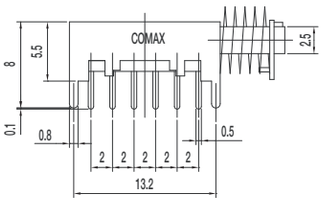

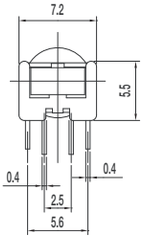

4P - 2T

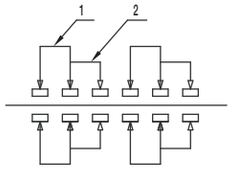

SCHEMATIC

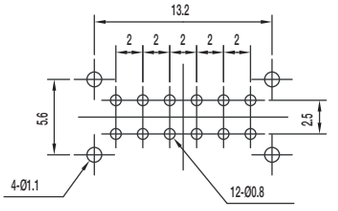

PIERCING PLAN

Specifications

CONTACT RATING: 0.3A @ 30 VDC
INITIAL CONTACT RESISTANCE: 30 m ohms max.
INSULATION RESISTANCE: 100 M ohms min.
DIELECTRIC STRENGTH: 500 V AC (50-60 Hz) between open terminals and between the frame and terminal.
OPERATING LIFE: 10,000 cycles with load
OPERATING FORCE: 250 ± 100 gf (2.45 ± 0.98N)
TRAVEL: 2 ± 0.3 mm
OPERATING TEMPERATURE: -20˚C to 70˚C

Materials

FRAME: SPCC
KNOB: POM (UL 94HB)
CONTACT PLATE: Silver plated
SPRING: Steel
TERMINAL: Silver plated

PS Series
Miniature Pushbutton Switches

PS-42D13-NS 4P2T NON-SHORTING

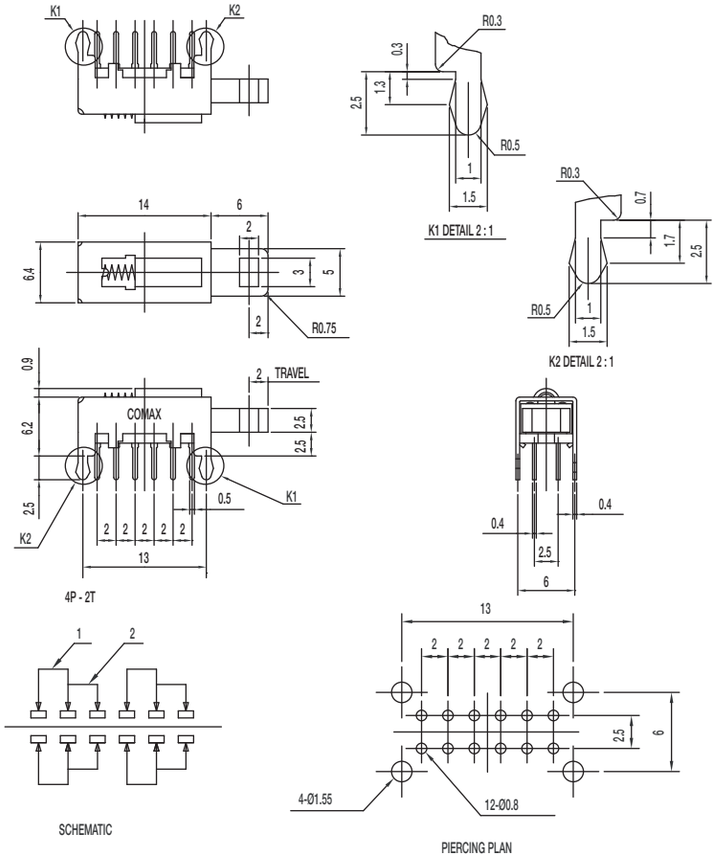

Specifications

CONTACT RATING: 0.3A @ 30 VDC

INITIAL CONTACT RESISTANCE: 30 m ohms max.

INSULATION RESISTANCE: 100 M ohms min.

DIELECTRIC STRENGTH: 500 V AC (50-60 Hz) between open terminals and between the frame and terminal.

OPERATING LIFE: 10,000 cycles with load

OPERATING FORCE: 250 ± 100 gf (2.45 ± 0.98N)

TRAVEL: 2 ± 0.3 mm

OPERATING TEMPERATURE: -20˚C to 70˚C

Materials

FRAME: SPCC

KNOB: POM (UL 94HB)

CONTACT: Silver plated

SPRING: Steel

TERMINAL: Silver plated

PS-42D16-S 4P2T SHORTING

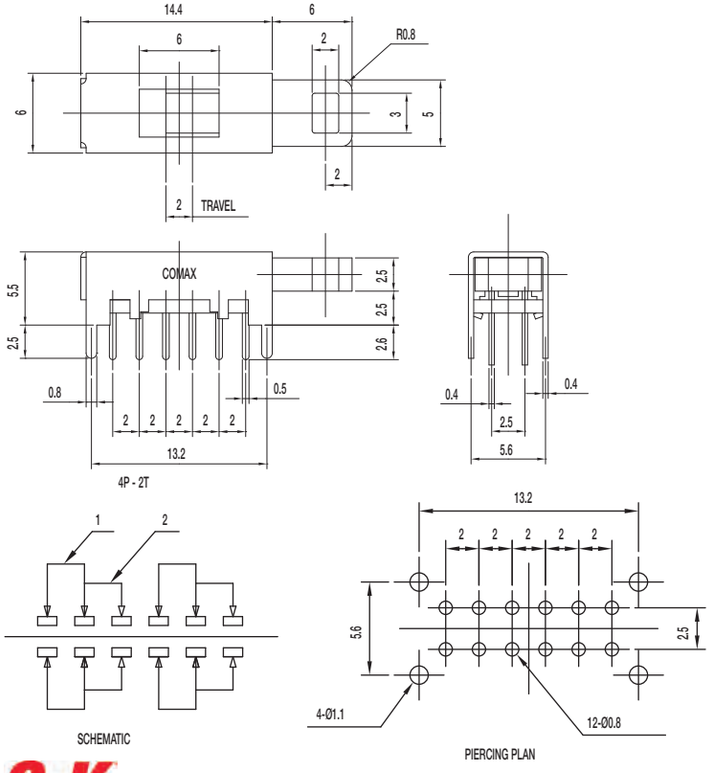

Specifications

CONTACT RATING: 0.3A @ 30 VDC

INITIAL CONTACT RESISTANCE: 30 m ohms max.

INSULATION RESISTANCE: 100 M ohms min.

DIELECTRIC STRENGTH: 500 V AC (50-60 Hz) between open terminals and between the frame and terminal.

OPERATING LIFE: 10,000 cycles with load

OPERATING FORCE: 60 ± 30 gf (0.59 ± 0.29N)

TRAVEL: 2 ± 0.3 mm

OPERATING TEMPERATURE: -20˚C to 70˚C

Materials

FRAME: SPCC

KNOB: POM (UL 94HB)

CONTACT: Silver plated

TERMINAL: Silver plated

Dimensions are shown: mm
Specifications and dimensions subject to change

PS-62D10-S 6P2T SHORTING

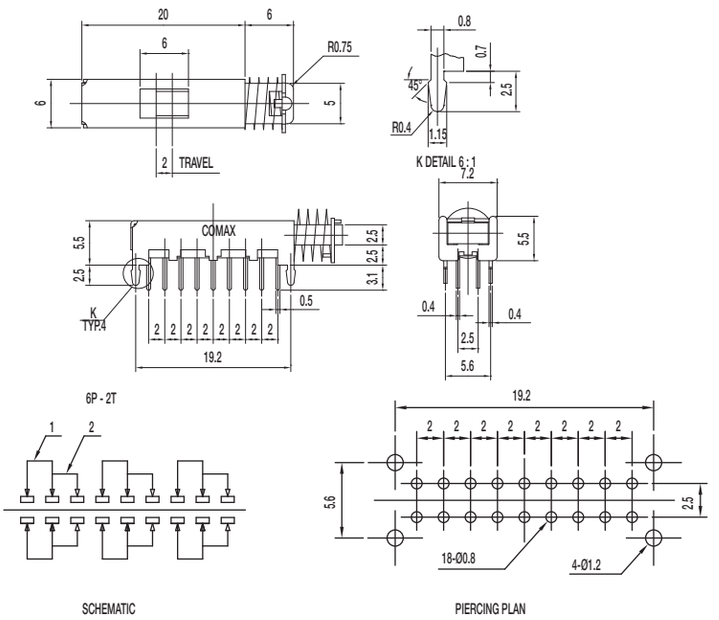

Specifications

CONTACT RATING: 0.3A @ 30 VDC

INITIAL CONTACT RESISTANCE: 30 m ohms max.

INSULATION RESISTANCE: 100 M ohms min.

DIELECTRIC STRENGTH: 500 V AC (50-60 Hz) between open terminals and between the frame and terminal.

OPERATING LIFE: 10,000 cycles with load

OPERATING FORCE: 250 ± 100 gf (2.45 ± 0.98N)

TRAVEL: 2 ± 0.3 mm

OPERATING TEMPERATURE: -20˚C to 70˚C

Materials

FRAME: SPCC

KNOB: POM (UL 94HB)

CONTACT: Silver plated

SPRING: Steel

TERMINAL: Silver plated

PS-62D13-S 6P2T SHORTING

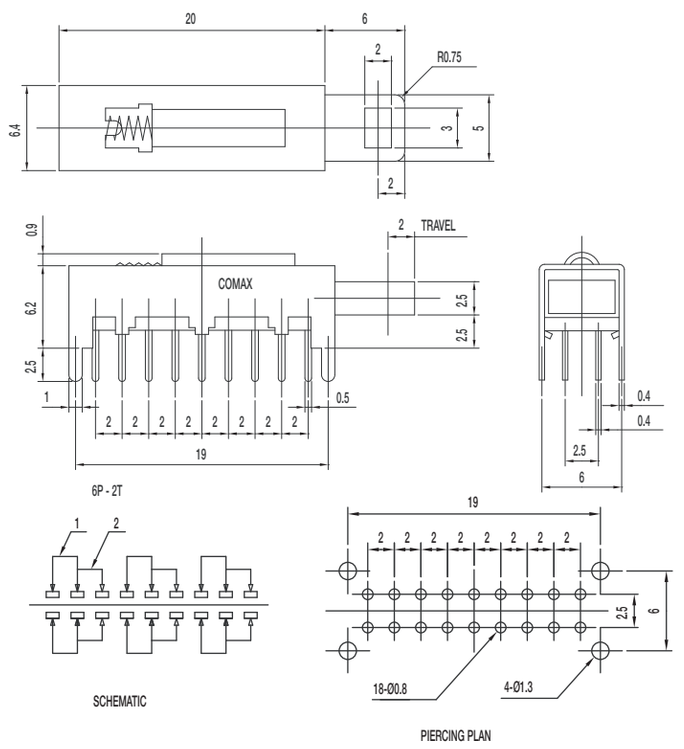

Specifications

CONTACT RATING: 0.3A @ 30 VDC

INITIAL CONTACT RESISTANCE: 30 m ohms max.

INSULATION RESISTANCE: 100 M ohms min.

DIELECTRIC STRENGTH: 500 V AC (50-60 Hz) between open terminals and between the frame and terminal.

OPERATING LIFE: 10,000 cycles with load

OPERATING FORCE: 300 ± 100 gf (2.94 ± 0.98N)

TRAVEL: 2 ± 0.3 mm

OPERATING TEMPERATURE: -20˚C to 70˚C

Materials

FRAME: SPCC

KNOB: POM (UL 94HB)

CONTACT PLATE: Silver plated

SPRING: Steel

TERMINAL: SUS

PS Series
Miniature Pushbutton Switches

PS-62D15-S 6P2T SHORTING

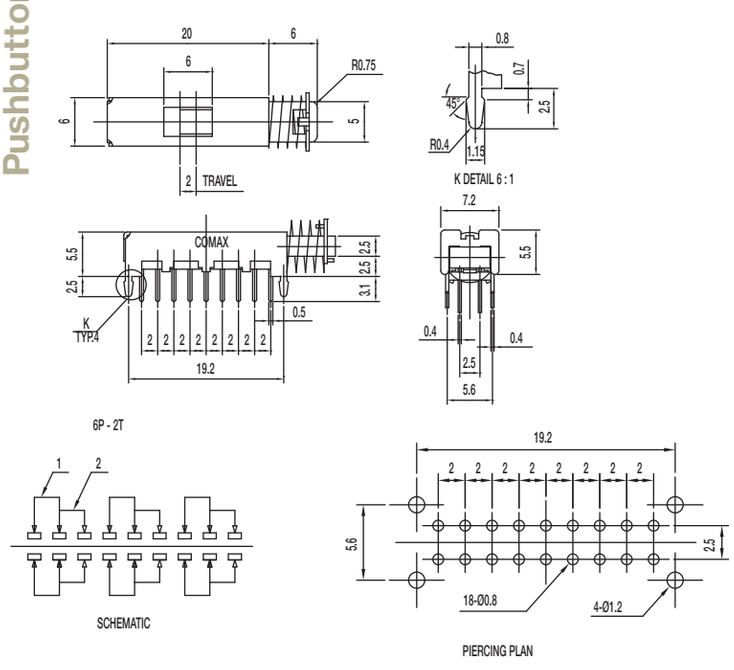

Specifications

CONTACT RATING: 0.3A @ 30 VDC

INITIAL CONTACT RESISTANCE: 30 m ohms max.

INSULATION RESISTANCE: 100 M ohms min.

DIELECTRIC STRENGTH: 500 V AC (50-60 Hz) between open terminals and between the frame and terminal.

OPERATING LIFE: 10,000 cycles with load

OPERATING FORCE: 250 ± 100 gf (2.45 ± 0.98N)

TRAVEL: 2 ± 0.3 mm

OPERATING TEMPERATURE: -20˚C to 70˚C

Materials

FRAME: SPCC

KNOB: POM (UL 94HB)

CONTACT: Silver plated

SPRING: Steel

TERMINAL: Silver plated

PS-22E02-G13 S DPDT SHORTING WITH LOCK

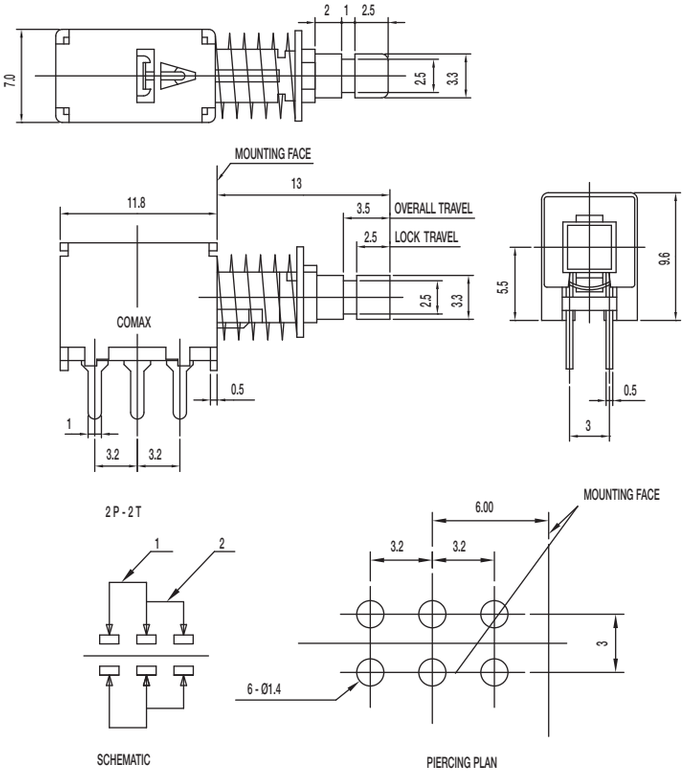

Specifications

CONTACT RATING: 0.3A @ 30 VDC

INITIAL CONTACT RESISTANCE: 30 m ohms max.

INSULATION RESISTANCE: 100 M ohms min.

DIELECTRIC STRENGTH: 500 V AC (50-60 Hz) between open terminals and between the frame and terminal.

OPERATING LIFE: 10,000 cycles with load

OPERATING FORCE: 300 ± 100 gf (2.94 ± 0.98N)

LOCK TRAVEL: 2.5 ± 0.3 mm

TOTAL TRAVEL: 3.5 ± 0.3 mm

OPERATING TEMPERATURE: -20˚C to 70˚C

Materials

FRAME: SPCC

KNOB: POM (UL 94HB)

CONTACT: Silver plated

SPRING: Steel

TERMINAL: Silver plated

PS-22E04-G13 NS DPDT NON-SHORTING WITH LOCK

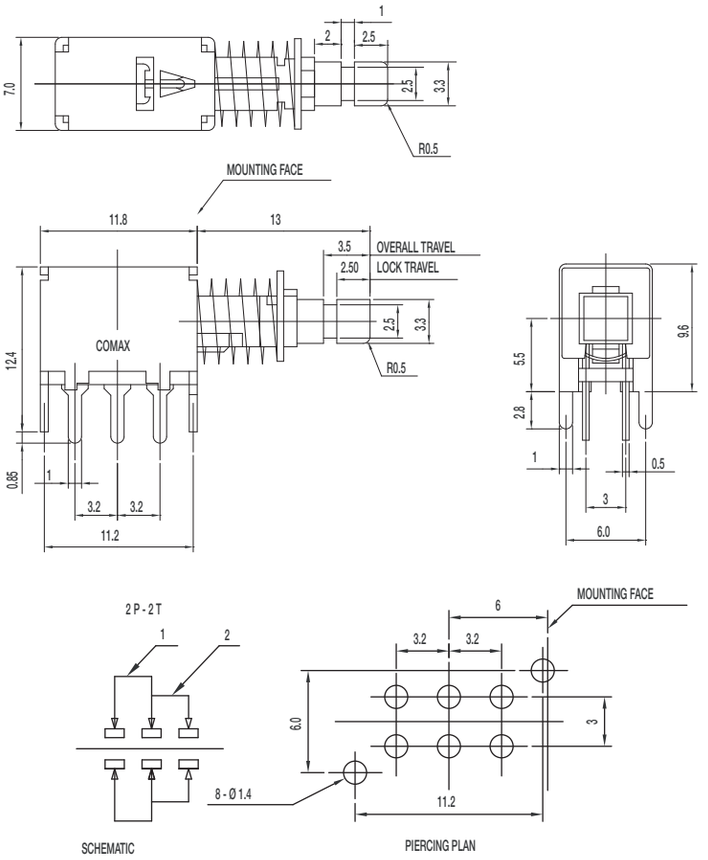

Specifications

CONTACT RATING: 0.3A @ 30 VDC
INITIAL CONTACT RESISTANCE: 30 m ohms max.
INSULATION RESISTANCE: 100 M ohms min.
DIELECTRIC STRENGTH: 500 V AC (50-60 Hz) between open terminals and between the frame and terminal.
OPERATING LIFE: 10,000 cycles with load
OPERATING FORCE: 300 ± 100 gf (2.94 ± 0.98N)
LOCK TRAVEL: 2.5 ± 0.3 mm
TOTAL TRAVEL: 3.5 ± 0.3 mm
OPERATING TEMPERATURE: -20˚C to 70˚C

Materials

FRAME: SPCC
KNOB: POM (UL 94HB)
CONTACT: Silver plated
SPRING: Steel
TERMINAL: Silver plated

PS-22E44-G13 NS DPDT NON-SHORTING WITH LOCK

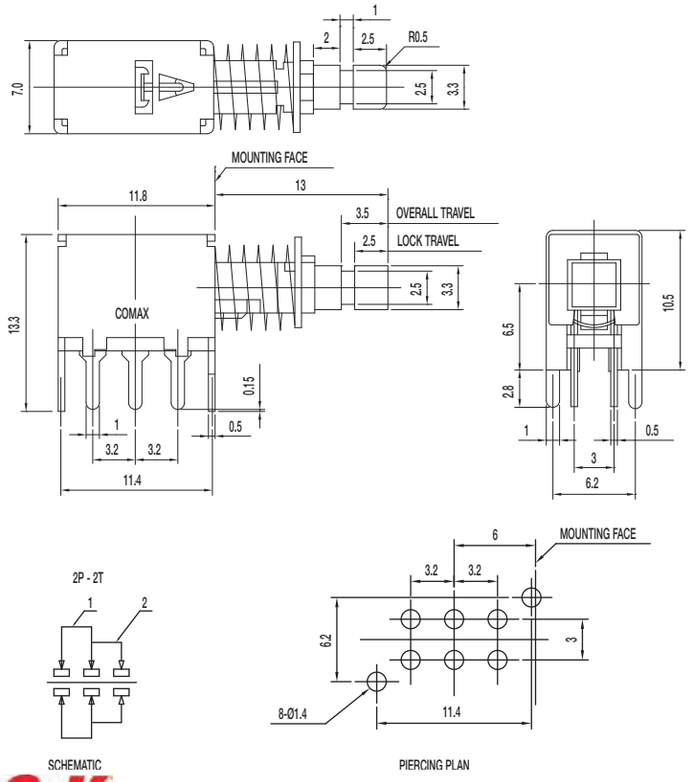

Specifications

CONTACT RATING: 0.3A @ 30 VDC
INITIAL CONTACT RESISTANCE: 30 m ohms max.
INSULATION RESISTANCE: 100 M ohms min.
DIELECTRIC STRENGTH: 500 V AC (50-60 Hz) between open terminals and between the frame and terminal.
OPERATING LIFE: 10,000 cycles with load
OPERATING FORCE: 300 ± 100 gf (2.94 ± 0.98N)
LOCK TRAVEL: 2.5 ± 0.3 mm
TOTAL TRAVEL: 3.5 ± 0.3 mm
OPERATING TEMPERATURE: -20˚C to 70˚C

Materials

FRAME: SPCC
KNOB: POM (UL 94HB)
CONTACT: Silver plated
SPRING: Steel
TERMINAL: Silver plated

Dimensions are shown: mm
Specifications and dimensions subject to change

PS Series
Miniature Pushbutton Switches

PS-22E75-G13 NS DPDT NON-SHORTING WITH LOCK

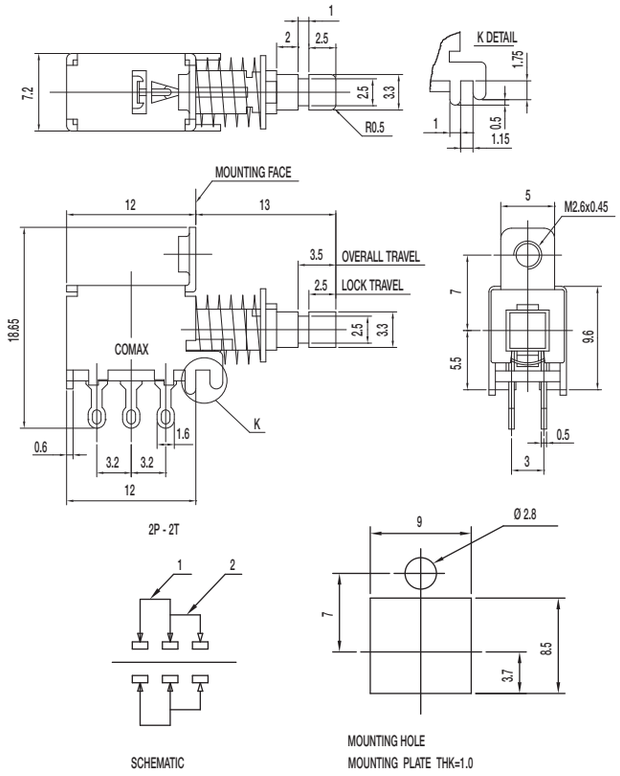

Specifications

CONTACT RATING: 0.3A @ 30 VDC

INITIAL CONTACT RESISTANCE: 30 m ohms max.

INSULATION RESISTANCE: 100 M ohms min.

DIELECTRIC STRENGTH: 500 V AC (50-60 Hz) between open terminals and between the frame and terminal.

OPERATING LIFE: 10,000 cycles with load

OPERATING FORCE: 300 ± 100 gf (2.94 ± 0.98N)

LOCK TRAVEL: 2.5 ± 0.3 mm

TOTAL TRAVEL: 3.5 ± 0.3 mm

OPERATING TEMPERATURE: -20˚C to 70˚C

Materials

FRAME: SPCC

KNOB: POM (UL 94HB)

CONTACT: Silver plated

SPRING: Steel

TERMINAL: Silver plated

PS-22E95-G13 NS DPDT NON-SHORTING WITH LOCK

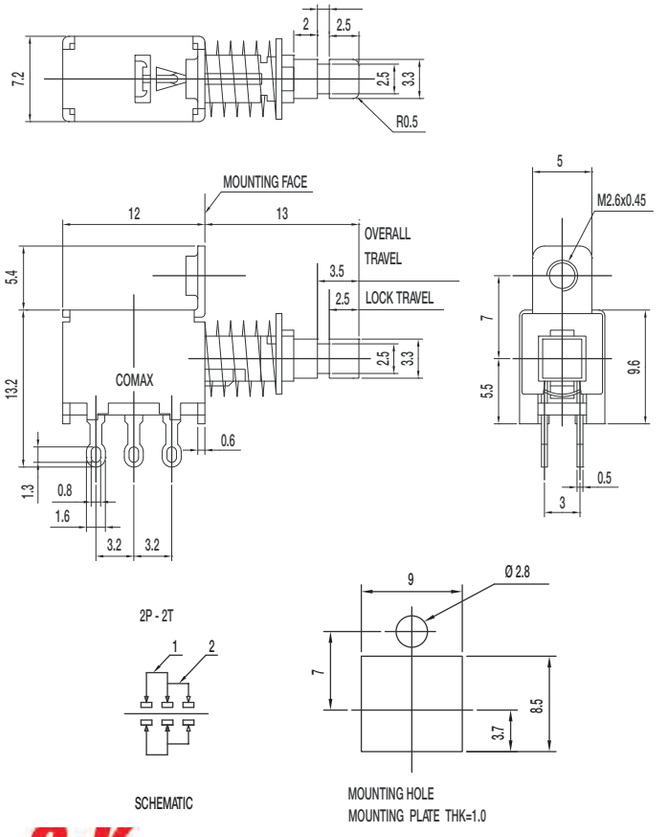

Specifications

CONTACT RATING: 0.3A @ 30 VDC

INITIAL CONTACT RESISTANCE: 30 m ohms max.

INSULATION RESISTANCE: 100 M ohms min.

DIELECTRIC STRENGTH: 500 V AC (50-60 Hz) between open terminals and between the frame and terminal.

OPERATING LIFE: 10,000 cycles with load

OPERATING FORCE: 300 ± 100 gf (2.94 ± 0.98N)

LOCK TRAVEL: 2.5 ± 0.3 mm

TOTAL TRAVEL: 3.5 ± 0.3 mm

OPERATING TEMPERATURE: -20˚C to 70˚C

Materials

FRAME: SPCC

KNOB: POM (UL 94HB)

CONTACT: Silver plated

SPRING: Steel

TERMINAL: Silver plated

Dimensions are shown: mm
Specifications and dimensions subject to change

PS-22F02-G13 S DPDT SHORTING

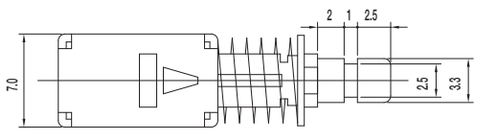

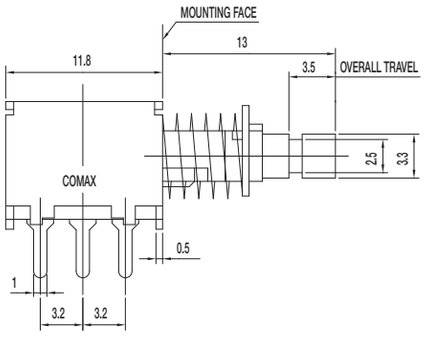

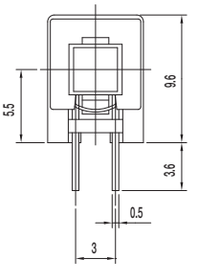

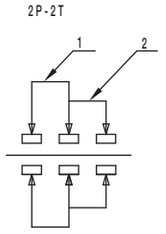

SCHEMATIC

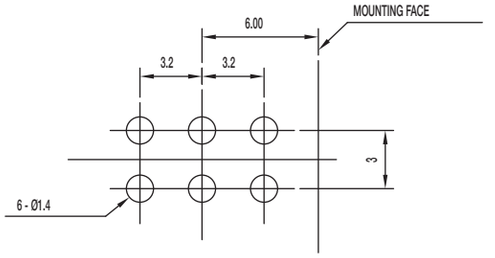

PIERCING PLAN

Specifications

CONTACT RATING: 0.3A @ 30 VDC
INITIAL CONTACT RESISTANCE: 30 m ohms max.
INSULATION RESISTANCE: 100 M ohms min.
DIELECTRIC STRENGTH: 500 V AC (50-60 Hz) between openterminals and between the frame and terminal.
OPERATING LIFE: 10,000 cycles with load
OPERATING FORCE: 300 ± 100 gf (2.94 ± 0.98N)
TOTAL TRAVEL: 3.5 ± 0.3 mm
OPERATING TEMPERATURE: -20˚C to 70˚C

Materials

FRAME: SPCC
KNOB: POM (UL 94HB)
CONTACT: Silver plated
SPRING: Steel
TERMINAL: Silver plated

PS-22F04-G13 NS DPDT NON_SHORTING

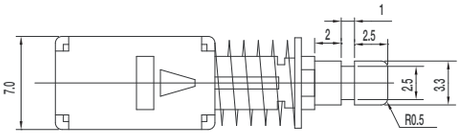

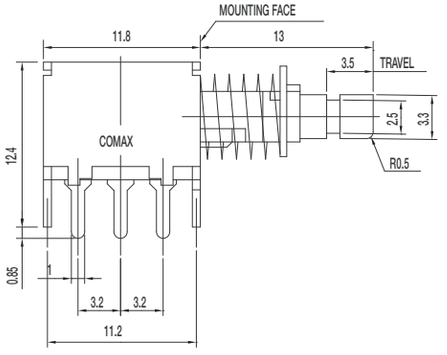

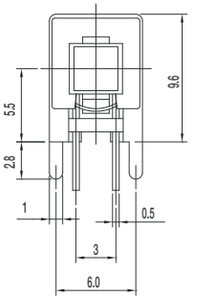

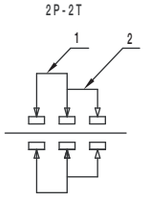

SCHEMATIC

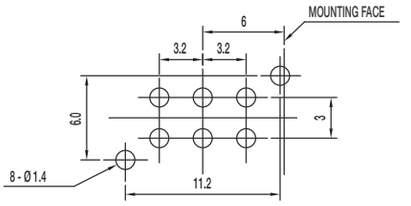

PIERCING PLAN

Specifications

CONTACT RATING: 0.3A @ 30 VDC
INITIAL CONTACT RESISTANCE: 30 m ohms max.
INSULATION RESISTANCE: 100 M ohms min.
DIELECTRIC STRENGTH: 500 V AC (50-60 Hz) between open terminals and between the frame and terminal.
OPERATING LIFE: 10,000 cycles with load
OPERATING FORCE: 300 ± 100 gf (2.94 ± 0.98N)
TOTAL TRAVEL: 3.5 ± 0.3 mm
OPERATING TEMPERATURE: -20˚C to 70˚C

Materials

FRAME: SPCC
KNOB: POM (UL 94HB)
CONTACT: Silver plated
SPRING: Steel
TERMINAL: Silver plated

PS Series
Miniature Pushbutton Switches

PS-22F24-G13 NS DPDT NON_SHORTING

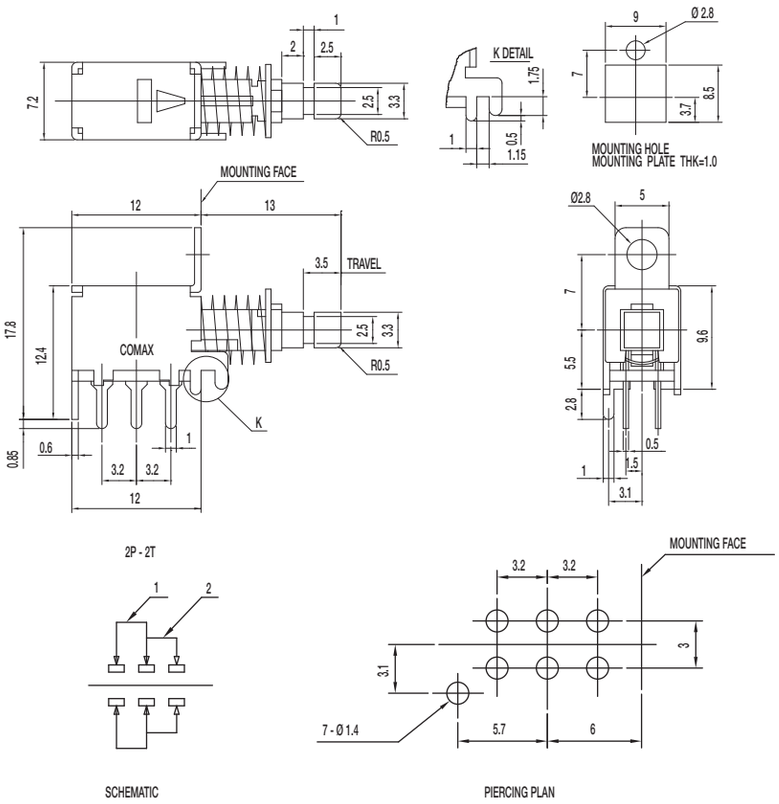

Specifications

CONTACT RATING: 0.3A @ 30 VDC
INITIAL CONTACT RESISTANCE: 30 m ohms max.
INSULATION RESISTANCE: 100 M ohms min.
DIELECTRIC STRENGTH: 500 V AC (50-60 Hz) between open terminals and between the frame and terminal.
OPERATING LIFE: 10,000 cycles with load
OPERATING FORCE: 300 ± 100 gf (2.94 ± 0.98N)
TOTAL TRAVEL: 3.5 ± 0.3 mm
OPERATING TEMPERATURE: -20˚C to 70˚C

Materials

FRAME: SPCC
KNOB: POM (UL 94HB)
CONTACT: Silver plated
SPRING: Steel
TERMINAL: Silver plated

PS-22F44-G13 NS DPDT NON_SHORTING

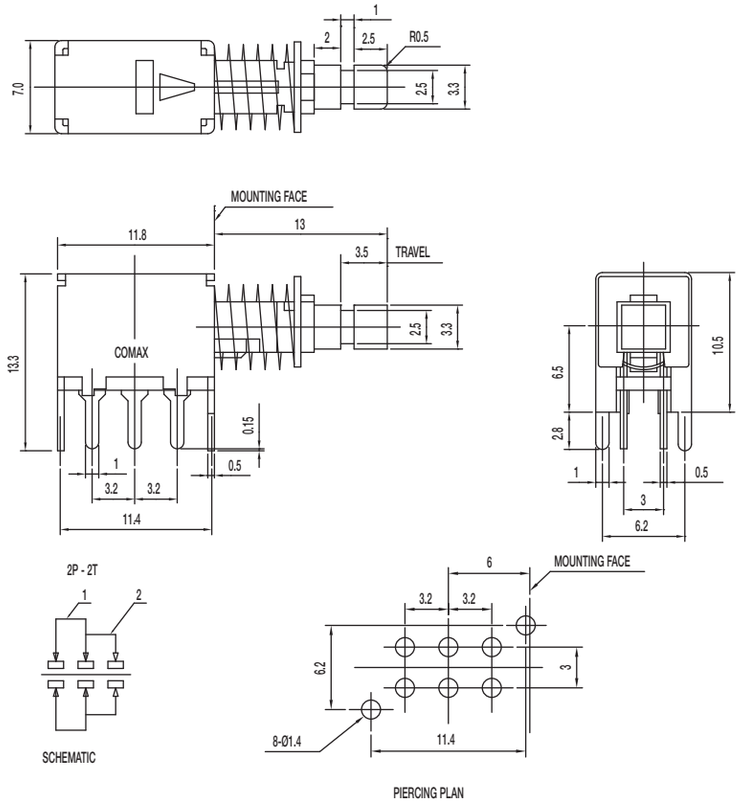

Specifications

CONTACT RATING: 0.3A @ 30 VDC
INITIAL CONTACT RESISTANCE: 30 m ohms max.
INSULATION RESISTANCE: 100 M ohms min.
DIELECTRIC STRENGTH: 500 V AC (50-60 Hz) between open terminals and between the frame and terminal.
OPERATING LIFE: 10,000 cycles with load
OPERATING FORCE: 300 ± 100 gf (2.94 ± 0.98N)
TOTAL TRAVEL: 3.5 ± 0.3 mm
OPERATING TEMPERATURE: -20˚C to 70˚C

Materials

FRAME: SPCC
KNOB: POM (UL 94HB)
CONTACT: Silver plated
SPRING: Steel
TERMINAL: Silver plated

Dimensions are shown: mm
Specifications and dimensions subject to change

Tactile Switches
Product Selection Guide

Surface Mount							
Series	**KXT2**	**KXT3**	**KMT2**	**KMT0**	**KMR 2-8**	**KMS**	**PTS525**
Size on PCB L x W (mm)	3,9 x 3	3 x 2	3 x 2,6	3 x 2,6	4,2 x 2,8	4,2 x 3,55	5,2 x 5,2
Total Height (mm)	1,05	0,6	0,65	0,65	1,9 2,5	1,42	0,8 and 1,5
Travel (mm)	0,1	0,13	0,15	0,15	0,2 to 0,35	0,25 to 0,3	0,3
Actuation Force (N)	100 gf 200 gf	100 gf 160gf 240 gf 330 gf	1,0 1,6	1,0; 1,6 2,3; 3,4	1,2; 2,0 3,0; 4,0	2,0 3,0	1,6 2,6
Contact Type	Silver	Silver	Silver	Silver	Silver / Gold	Silver / Gold	Silver
Max. Voltage (V)	12	15	32	32	32	32	32
Max. Switching Power (VA)	0,5	0,5	0,5	0,5	1 / 0,2	1 / 0,2	1
Life Cycles	100,000	300,000 500,000	150,000	300,000/600,000 1,000,000	100,000 300,000	100,000	100,000
IP Rating	IP64	IP64	IP54	IP68	IP40	IP40	IP40
Page Number	B-5	B-7	B-9	B-11	B-13	B-23	B-25

Surface Mount	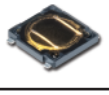						
Series	**PTS530**	**PTS540**	**PTS810**	**PTS820**	**PTS830**	**PTS840**	**KSR**
Size on PCB L x W (mm)	4,5 x 4,5	3,7 x 3,7	4,2 x 3,2	3,9 x 2,9	3,5 x 2,6	3,5 x 3,55	7,15 x 3,8 7,3 x 3,8
Total Height (mm)	0,55 and 0,65	0,55 / 0,65	2,5	1,5/2,0/2,5	1,4	1,35	2,5
Travel (mm)	0,2	0,15	0,15/0,2	0,2	0,15	0,2	0,3 to 0,5
Actuation Force (N)	1,0; 1,6; 2,0; 2,6; 4,0; 6,0	160 gf 230 gf	1,6; 2,6; 4,0; 6,0	1,6 2,5	160 gf 450 gf	1,6 2,2	1,2; 2,0; 3,0; 4,5
Contact Type	Silver	Silver	Silver	Silver	Silver	Silver	Silver / Gold
Max. Voltage (V)	12	12	16	12	12	12	32
Max. Switching Power (VA)	–	–	–	-	-	-	1 / 0,2
Life Cycles	150,000 to 1,000,000	300,000 500,000	50,000 to 150,000	100,000 200,000	200,000 500,000	100,000	100,000 200,000
IP Rating	-	IP40	IP40	IP40	IP40	IP40	IP50
Page Number	B-29	B-31	B-33	B-35	B-38	B-42	B-45

* Other options available by request

Dimensions are shown: mm
Specifications and dimensions subject to change

Surface Mount Thru-Hole Options				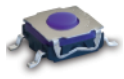	
Series	**KSS**	**KSC4V2**	**KSC 1 - 10**	**KSE**	**KT**
Footprint	5,5 x 4,4	2 holes ø 1,1 2 pads 1,5 x 0,8	J 6,8 x 6,2 G 10 x 6,2	6,8 x 6,2	SA 7,5x5 SA2 7,5x7
Total Height (mm)	1,7	5,0*		3,1 / 4,3	6,6 7,11 with tab
Travel (mm)	0,3	0,7*	0,20 to 0,75 *	0,3	0,3 to 0,5
Actuation Force (N)	2 2,5 4	3.5*	1,1 to 5,5 *	1.5 2.25	3
Contact Type	Silver / Gold	Silver / Gold	Silver / Gold	Silver	Silver / Gold
Max. Voltage (V)	32	32	32	32	50
Max. Switching Power (VA)	1 / 0,2	1 / 0,2	1 / 0.2	1	1 / 0.2
Life Cycles	100,000	300,000	100,000 to 1,000,000	300,000	100,000
IP Rating	IP40	IP67	IP67	IP67	
Page Number	B-49	B-63	B-51	B-65	B-68

Surface Mount Thru-Hole Options							
Series	**K5AT**	**K8**	**K5V**	**KSF/KSI**	**KSA**	**KSA-V**	**KSA MKII**
Footprint	G 8,4 x 10,8	G 8,4 x 10,8	8 x 9 x 17 / 9 x 13	7,62 x 5,08	7,62 x 5,08	7,62 x 2,54	7,62 x 5,08
Total Height (mm)	6,1	6	9 / 13	2,6	4,7 button option	8	4,7
Travel (mm)	0,5	0,45	1,2	0,3 to 0,5	0,3 to 0,5	0,3 to 0,5	0,3 to 0,5
Actuation Force (N)	4.0	4.0	4.0	1.3 3.0 1.6 5.0	1.3 3.0 5.0	1.3 3.0 5.0	1.3 3.0 5.0
Contact Type	Gold	Silver	Gold	Silver / Gold	Silver / Gold	Silver / Gold	Silver / Gold
Max. Voltage (V)	32	32	32	32	32	32	32
Max. Switching Power (VA)	1	1	1	1 / 0.2	1 / 0.2	1 / 0.2	1 / 0.2
Life Cycles	100,000	300,000	25,000	100,000	100,000	100,000	100,000 1,000,000
IP Rating	IP40	IP40	IP40	IP60	IP60	IP60	IP67
Page Number	B-73	B-75	B-78	B-82	B-84	B-84	B-89

* Other options available by request

Tactile Switches
Product Selection Guide

Surface Mount Thru-Hole Options					
Series	**KSJ**	**KSJ-V**	**KSJ**	**KSJ-V**	**PTS635**
Footprint	7,62 x 5,08	7,62 x 2,54	7,62 x 5,08	7,62 x 2,54	6 x 3,5
Total Height (mm)	9,9	8	6,65	8	2,5 4,3 5,0
Travel (mm)	0,3 to 0,5	0,3 to 0,5	0,55 to 0,7	0,55 to 0,7	0,25
Actuation Force (N)	1,3 3,0	1,3 3,0	2,0 3,0	2,0 3,0	1,3 2,0 2,6
Contact Type	Silver / Gold	Silver / Gold	Silver / Gold	Silver / Gold	Silver
Max. Voltage (V)	32	32	32	32	12
Life Cycles	100,000	100,000	100,000 30,000	100,000 30,000	20,000
IP Rating	IP60	IP60	IP60	IP60	IP40
Page Number	B-84	B-84	B-91	B-91	B-93

Surface Mount Thru-Hole Options			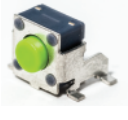			
Series	**PTS641**	**PTS645**	**PTS645-V**	**PTS125**	**ITS**	
Footprint	6,3 x 6,4	6 x 6	7,0 x 2,5	12 x 12	variety of sizes available	
Total Height (mm)	2,5 3,1 3,4	4,3; 5,0; 7,0; 9,5;	7,1	4,3 7,3 Sq. 8,5 12,0		
Travel (mm)	0,20 / 0,30	0,25	0,25	0,30	0,25	
Actuation Force (N)	160 gf 250 gf 320 gf	1,3; 1,6 2,0; 2,6	1,3; 1,6 2,0; 2,6	1,6 2,6	160 gf	
Contact Type	Silver	Silver	Silver	Silver	Silver	
Max. Voltage (V)	12	12	12	12	12	
Life Cycles	100,000	100,000	100,000	200,000	50,000	
IP Rating	IP40	IP40	IP40	IP40	IP40	
Page Number	B-96	B-98	B-103	B-105	B-109	

KXT2 Series
Double Action Ultra Low Profile Top Actuated

Features

- ***3.9 x 3.0 mm footprint***
- ***1.05 mm thickness***
- ***Dual action***

Typical Applications

- ***Wearable electronics***
- ***Mobile Phones***
- ***Portable Electronics***

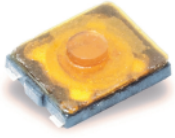

Specification

FUNCTION: momentary action
CONTACT ARRANGEMENT: Dual action = SPDT, N.O.
TERMINALS: G type for SMT
TRAVEL: 0.1 mm ± 0.05 mm
TRAVEL: 0.2 mm + 0.1 / - 0.05 mm

Mechanical

	Operating force gf		Operating Life
KXT 211 LHS	Push force 1 Push force 2	100 ± 40 200 ± 50	100,000

Electrical

MAXIMUM VOLTAGE:	12 VDC
MAXIMUM CURRENT DC:	50 mA
DIELECTRIC STRENGTH:	250 V (50 Hz, 1 min.)
CONTACT RESISTANCE:	≤ 500 mΩ
INSULATION RESISTANCE:	100 MΩ
BOUNCE TIME:	≤ 10 ms

Environmental

OPERATING TEMPERATURE: -40˚C to 85˚C
STORAGE TEMPERATURE: -40˚C to 85˚C

Process

SOLDERING: This component is suited to the following methods:
Infrared Reflow Soldering in accordance with IEC61760-1

Packaging

In reels of 6,000 pieces
Dimensions of reels according to EIA RS481 or IEC 2863
External diameter 178 mm ± 2mm

NOTE: Specifications listed above are for switches with standard options.
For information on specific and custom switches, consult Customer Service Center.

Part Number Description

For any part number different from those listed above, please consult your local representative.

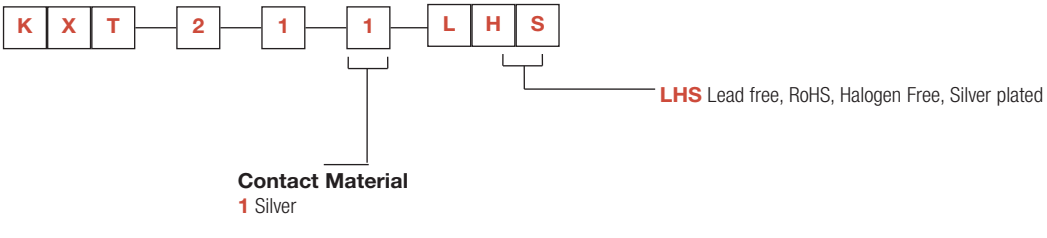

KXT2 Series
Double Action Ultra Low Profile Top Actuated

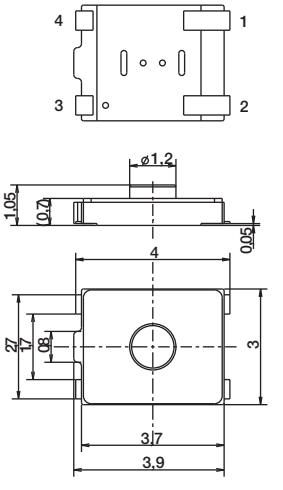

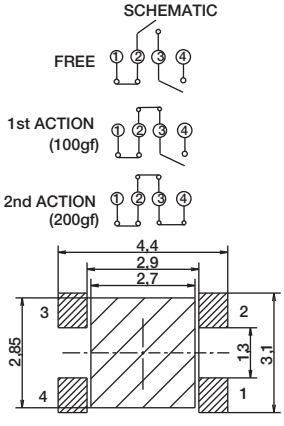

RECOMMENDED PCB LAYOUT

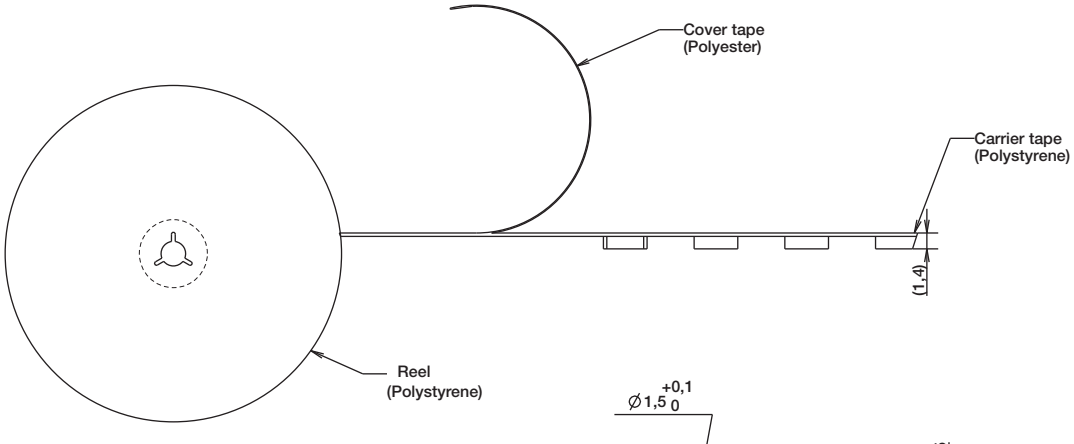

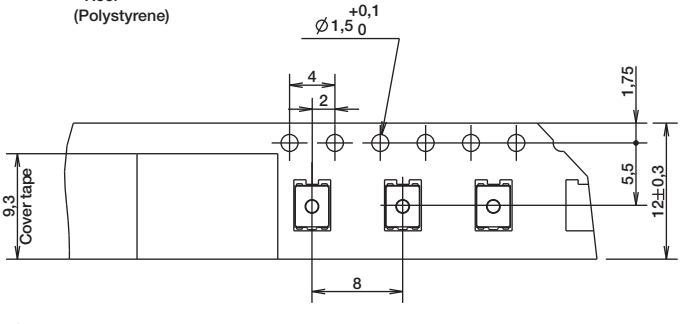

CARRIER TAPE

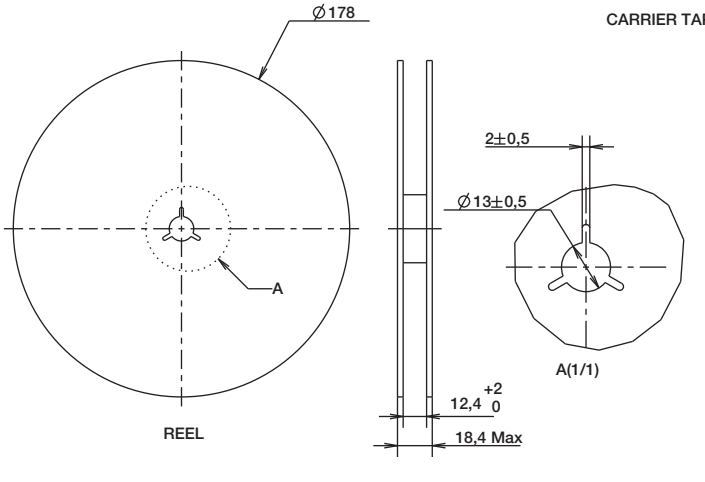

REEL

Dimensions are shown: mm
Specifications and dimensions subject to change

KXT3 Series
Ultra Low Profile Top Actuated

Features

- *3.0 x 2.0 mm footprint*
- *0.6 mm thickness*
- *High number of cycle*

Typical Applications

- *Wearable electronics*
- *In-Ear headphones, Earbuds*
- *Mobile Phones*
- *Portable Electronics*
- *Hearing Aids*

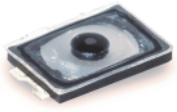

Specification

FUNCTION: momentary action
CONTACT ARRANGEMENT: 1 make contact = SPST, N.O.
TERMINALS: G type for SMT
TRAVEL: 0.13 mm ± 0.05 mm

Mechanical

	Operating force gf	Operating Life	Casing Color
KXT 311 LHS	100 ± 50	300,000	Black
KXT 321 LHS	160 ± 50	500,000	Black
KXT 331 LHS	240 ± 70	500,000	Black
KXT 341 LHS	330 ± 70	300,000	Black

Electrical

MAXIMUM VOLTAGE: 15 VDC
MAXIMUM CURRENT DC: 20 mA
DIELECTRIC STRENGTH: (50/60 Hz, 1 min) 250 Vrms
CONTACT RESISTANCE: ≤ 500 mΩ
INSULATION RESISTANCE: ≥ 50 MΩ
BOUNCE TIME: ≤ 10 ms

Environmental

OPERATING TEMPERATURE: -40˚C to 85˚C
STORAGE TEMPERATURE: -40˚C to 85˚C

Process

SOLDERING: This component is suited to the following methods:
Infrared Reflow Soldering in accordance with IEC61760-1

Packaging

In reels of 8,500 pieces
Dimensions of reels according to EIA 481B
External diameter 330 mm

NOTE: Specifications listed above are for switches with standard options.
For information on specific and custom switches, consult Customer Service Center.

Part Number Description

For any part number different from those listed above, please consult your local representative.

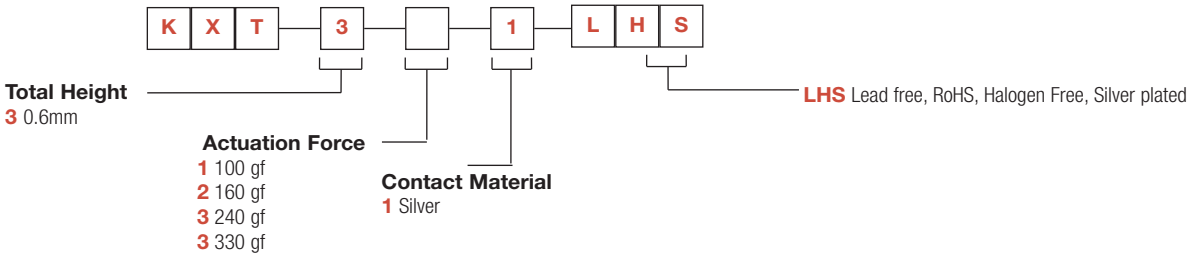

KXT3 Series
Ultra Low Profile Top Actuated

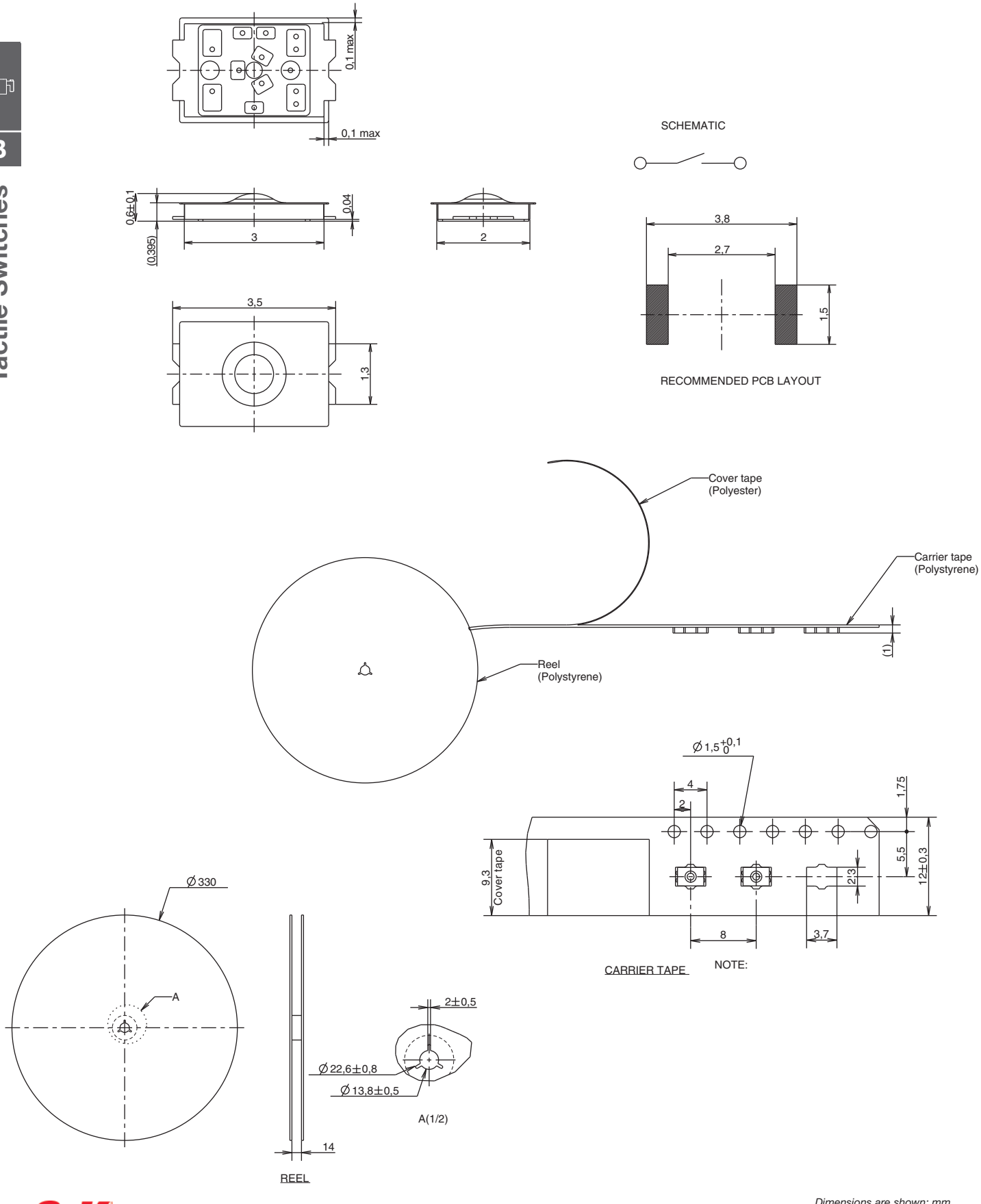

Features

- *Smallest footprint*
- *High number of cycles within the smallest packaging*
- *Smallest thickness with integrated actuator*
- *Ground pin option*
- *Halogen free*

Typical Applications

- *Mobile Phones*
- *Hearing Aids*
- *MP3 accessories*
- *Bluetooth Headset*

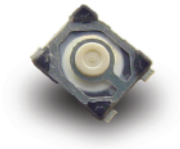

Specification

FUNCTION: momentary action
CONTACT ARRANGEMENT: 1 make contact = SPST, N.O.
TERMINALS: Gullwing type for SMT

Mechanical

Type G and NG	Operating force Newtons (grams)	Operating Life	Tactile Feeling	Travel mm
KMT 211 HF LFS	1.0 (100) ± 0.25	150,000	≥ 10%	0.15 ± 0.1
KMT 221 HF LFS	1.6 (160) ± 0.40	150,000	≥ 30%	0.15 ± 0.1

Electrical

	Silver
MAXIMUM POWER:	0.5 VA
MAXIMUM VOLTAGE:	32 VDC
MINIMUM VOLTAGE:	20 mV
MAXIMUM CURRENT DC:	50 mA
MINIMUM CURRENT DC:	1 mA
DIELECTRIC STRENGTH:	≥ 250 Vrms (1mn)
CONTACT RESISTANCE:	≤ 150 mΩ
INSULATION RESISTANCE:	≥ 50 MΩ
BOUNCE TIME:	≤ 6 ms

Environmental

	Silver
OPERATING TEMPERATURE:	-40˚C to 85˚C
STORAGE TEMPERATURE:	-55˚C (10 days) +85˚C (4 days)

Process

SOLDERING: This component is suited to the following methods:
– Infrared Reflow Soldering in accordance with IEC61760-1

Packaging

In reels of 4,000 pieces.
Dimensions of reels according to EIA 481B
External diameter 180 mm

NOTE: Specifications listed above are for switches with standard options.
For information on specific and custom switches, consult Customer Service Center.

Part Number Description

For any part number different from those listed above, please consult your local representative.

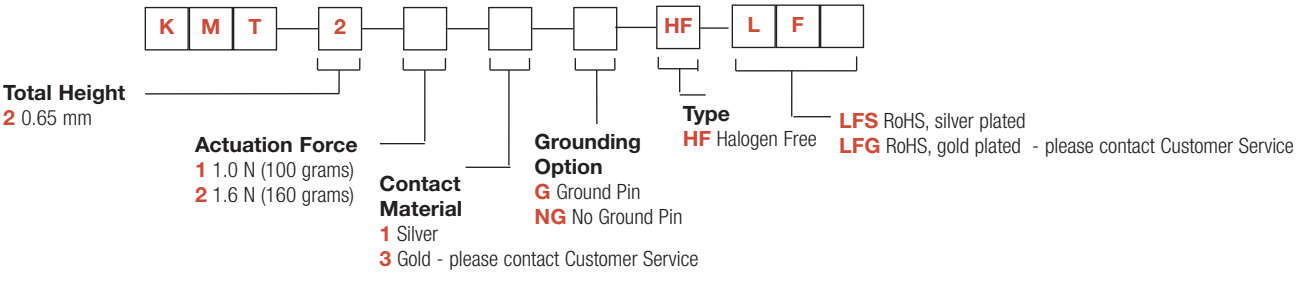

KMT Series – No Ground Pin

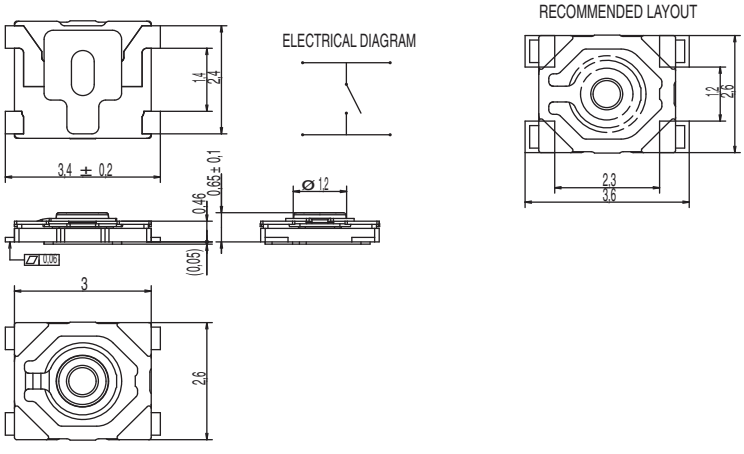

KMT Series – With Ground Pin

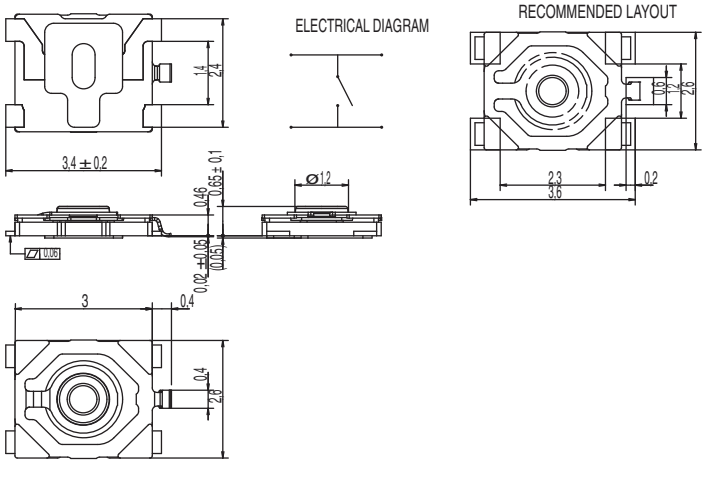

TAPE & REEL

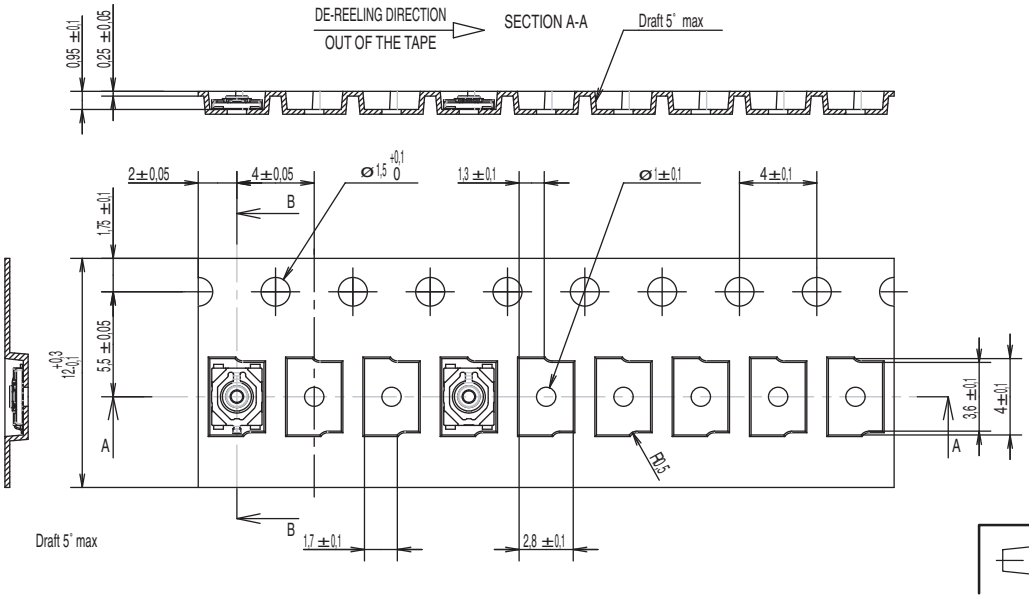

First Angle Projection

Dimensions are shown: mm
Specifications and dimensions subject to change

KMT0 Series
Nano-Miniature SMT Top Actuated

Features

- *Smallest footprint*
- *Smallest thickness with integrated actuator*
- *Extended life cycles*
- *IP68*
- *Ultra low current capabilities*

Typical Applications

- *Mobile Phones*
- *Hearing Aids*
- *MP3 accessories*
- *Bluetooth Headset*
- *Automotive keyless entry system*
- *Smoke and CO detectors*
- *E-readers*
- *Home automation remote controls*

Specification

FUNCTION: momentary action, normally open
CONTACT ARRANGEMENT: 1 make contact = SPST, N.O.
TERMINALS: J lead type for SMT

Mechanical

TRAVEL (mm): 0.15 ± 0.1

	Operating force Newtons (grams)	Tactile Feeling	Operating Life
KMT011NGJLHS	1.0 (100) ± 25%	≥ 10%	300,000
KMT021NGJLHS	1.6 (160) ± 25%	≥ 30%	300,000
KMT071NGJLHS	2.3 (230) ± 25%	≥ 30%	300,000
KMT031NGJLHS	3.4 (340) ± 25%	≥ 30%	300,000

	Operating force Newtons (grams)	Tactile Feeling	Operating Life
KMT012NGJLHS	1.0 (100) ± 25%	≥ 10%	1,000,000
KMT022NGJLHS	1.6 (160) ± 25%	≥ 30%	600,000
KMT072NGJLHS	2.3 (230) ± 25%	≥ 30%	600,000

Electrical

MAXIMUM POWER:	0.5 VA
MAXIMUM VOLTAGE:	32 VDC
MINIMUM VOLTAGE:	20 mV
MAXIMUM CURRENT DC:	50 mA
MINIMUM CURRENT DC:	1 mA
DIELECTRIC STRENGTH:	≥ 250 Vrms (1mn)
CONTACT RESISTANCE:	≤ 150 mΩ
INSULATION RESISTANCE:	≥ 50 MΩ
BOUNCE TIME:	≤ 6 ms

Environmental

OPERATING TEMPERATURE: -40˚C to 85˚C
STORAGE TEMPERATURE: -55˚C (10 days) +85˚C (4 days)

Process

SOLDERING: This component is suited to the following methods:
– Infrared Reflow Soldering in accordance with IEC61760-1

Packaging

In reels of 5,000 pieces.
Dimensions of reels according to EIA 481B
External diameter 180 mm

NOTE: Specifications listed above are for switches with standard options.
For information on specific and custom switches, consult Customer Service Center.

Part Number Description

For any part number different from those listed above, please consult your local representative.

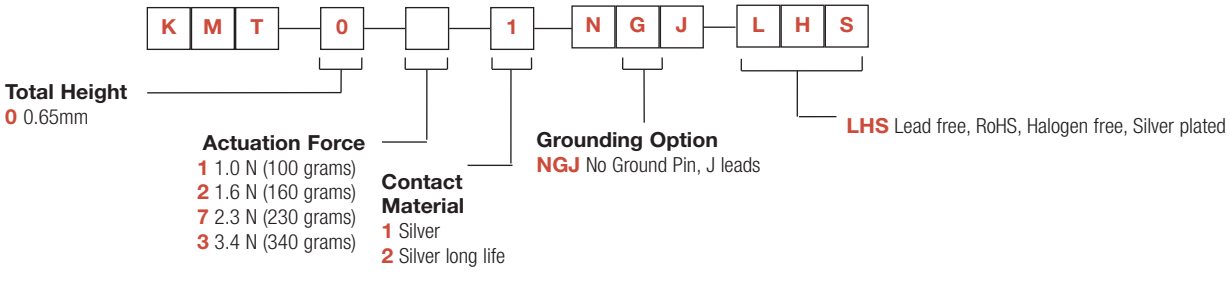

KMT0 Series
Nano-Miniature SMT Top Actuated

Minimum actuator diameter is 1.0 mm. It is recommended to enlarge this diameter to a full flat surface covering the switch.

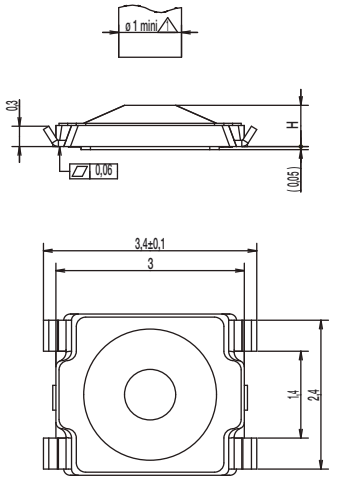

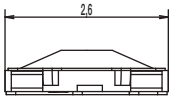

RECOMMENDED LAYOUT
ELECTRICAL DIAGRAM

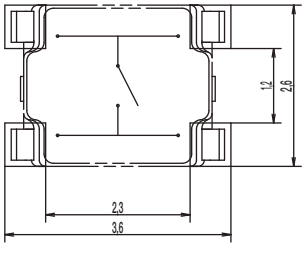

TAPE & REEL

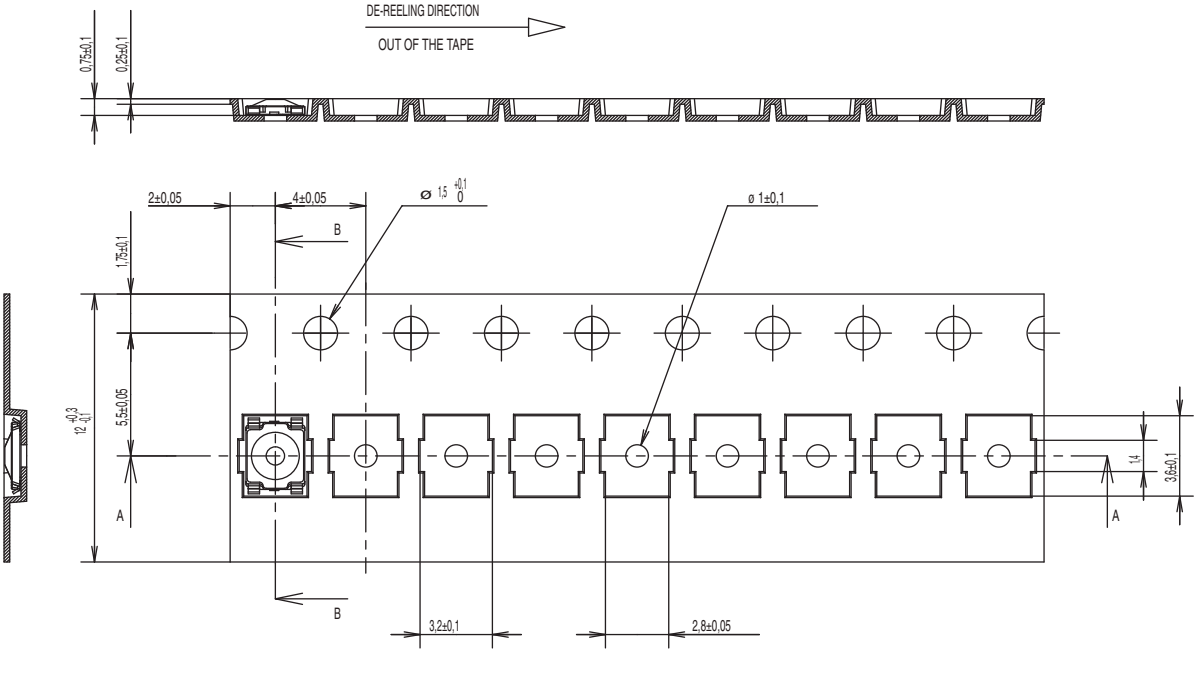

First Angle Projection

Dimensions are shown: mm
Specifications and dimensions subject to change

KMR 2 Series
Microminiature SMT Top Actuated

Features/Benefits

- ***Small footprint***
- ***4 actuation forces***
- ***Excellent tactile feel***
- ***Ultra low current capabilities***
- ***IP40***

Typical Applications

- ***Automotive***
- ***Industrial electronics***
- ***Medical equipment***

Specification

FUNCTION: momentary action
CONTACT ARRANGEMENT: 1 make contact = SPST, N.O.
TERMINALS: Gullwing type for SMT

Mechanical

Type G and NG See description below	Operating force N (grs)	Operating life (cycles)	Travel (mm)
KMR211 LFS	1.2 (120) ± 0.30	200,000	0.20 mm ± 0.1
KMR211 ULC LFS	1.2 (120) ± 0.30	200,000	0.20 mm ± 0.1
KMR213 LFG	1.2 (120) ± 0.30	200,000	0.20 mm ± 0.1
KMR213 ULC LFG	1.2 (120) ± 0.30	200,000	0.20 mm ± 0.1
KMR221 LFS	2.0 (200) ± 0.50	200,000	0.25 mm ± 0.1
KMR221 ULC LFS	2.0 (200) ± 0.50	200,000	0.25 mm ± 0.1
KMR223 LFG	2.0 (200) ± 0.50	200,000	0.25 mm ± 0.1
KMR223 ULC LFG	2.0 (200) ± 0.50	200,000	0.25 mm ± 0.1
KMR231 LFS	3.0 (300) ± 0.75	150,000	0.25 mm ± 0.1
KMR231 ULC LFS	3.0 (300) ± 0.75	150,000	0.25 mm ± 0.1
KMR232 LFS	3.0 (300) ± 0.75	300,000	0.25 mm ± 0.1
KMR232 ULC LFS	3.0 (300) ± 0.75	300,000	0.25 mm ± 0.1
KMR233 LFG	3.0 (300) ± 0.75	150,000	0.25 mm ± 0.1
KMR233 ULC LFG	3.0 (300) ± 0.75	150,000	0.25 mm ± 0.1
KMR241 LFS	4.0 (400) ± 1.00	100,000	0.30 mm ± 0.1
KMR241 ULC LFS	4.0 (400) ± 1.00	100,000	0.30 mm ± 0.1
KMR242 LFS	4.0 (400) ± 1.00	200,000	0.30 mm ± 0.1
KMR242 ULC LFS	4.0 (400) ± 1.00	200,000	0.30 mm ± 0.1
KMR243 LFG	4.0 (400) ± 1.00	100,000	0.30 mm ± 0.1
KMR243 ULC LFG	4.0 (400) ± 1.00	100,000	0.30 mm ± 0.1

Electrical

	Silver	Gold
MAXIMUM POWER:	1 VA	0.2 VA
MAXIMUM VOLTAGE:	32 VDC	32 VDC
MINIMUM VOLTAGE:	20 mVDC	20 mVDC
MAXIMUM CURRENT:	50 mA	10 mA
MINIMUM CURRENT:	1 mA*	1 mA*
DIELECTRIC STRENGTH:	≥ 250 Vrms	
CONTACT RESISTANCE:	≤ 100 mΩ	
INSULATION RESISTANCE:	≥ 1GΩ	
BOUNCE TIME:	≤ 3 ms	

*For ULC version minimum current is 1µA at 1.8 VDC

Environmental

	Silver	Gold
OPERATING TEMPERATURE:	-40˚C to 85˚C	-40˚C to 125˚C
STORAGE TEMPERATURE:	-55˚C to 85˚C	-55˚C to 125˚C

Process

Infrared Reflow Soldering in accordance with IEC61760-1

Packaging

In reels of 7,000 pieces
External diameter 330 mm ± 2 mm

NOTE: Specifications listed above are for switches with standard options.
For information on specific and custom switches, consult Customer Service Center.

TACTILE FEELING: KMR 2 series with actuation force in 2N - 3N - 4N: ≥ 30%
KMR 2 series with actuation force in 1.2N: ≥ 20%

Part Number Description

For any part number different from those listed above, please consult your local representative.

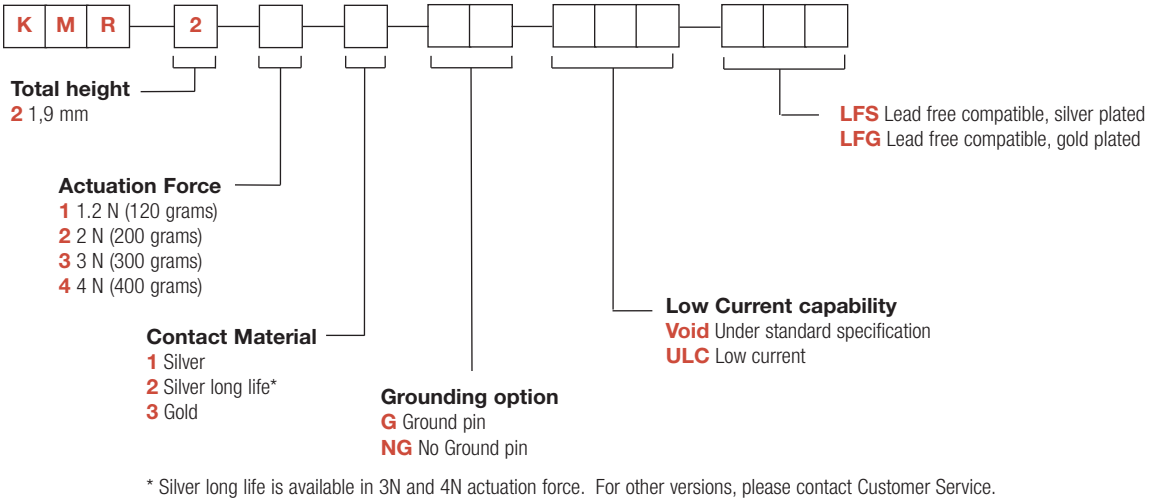

* Silver long life is available in 3N and 4N actuation force. For other versions, please contact Customer Service.

Dimensions are shown: mm
Specifications and dimensions subject to change

KMR 2 Series
Microminiature Tact Switch for SMT

KMR 2 Series - 1.9 mm height

PCB layout shown with ground pin option

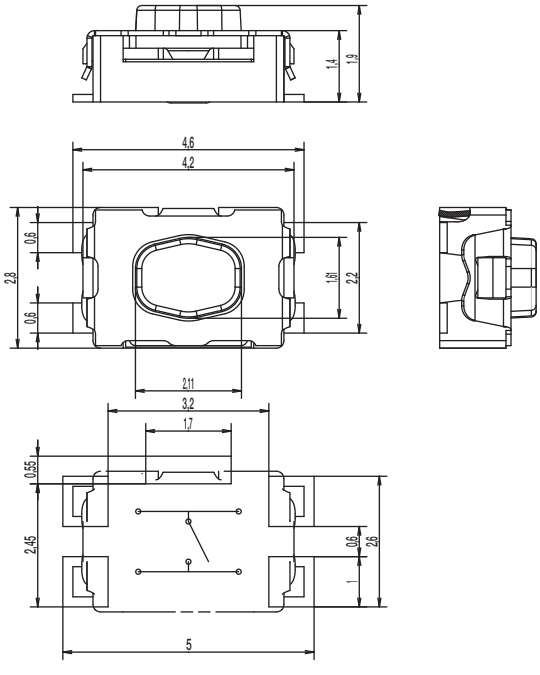

TAPE & REEL

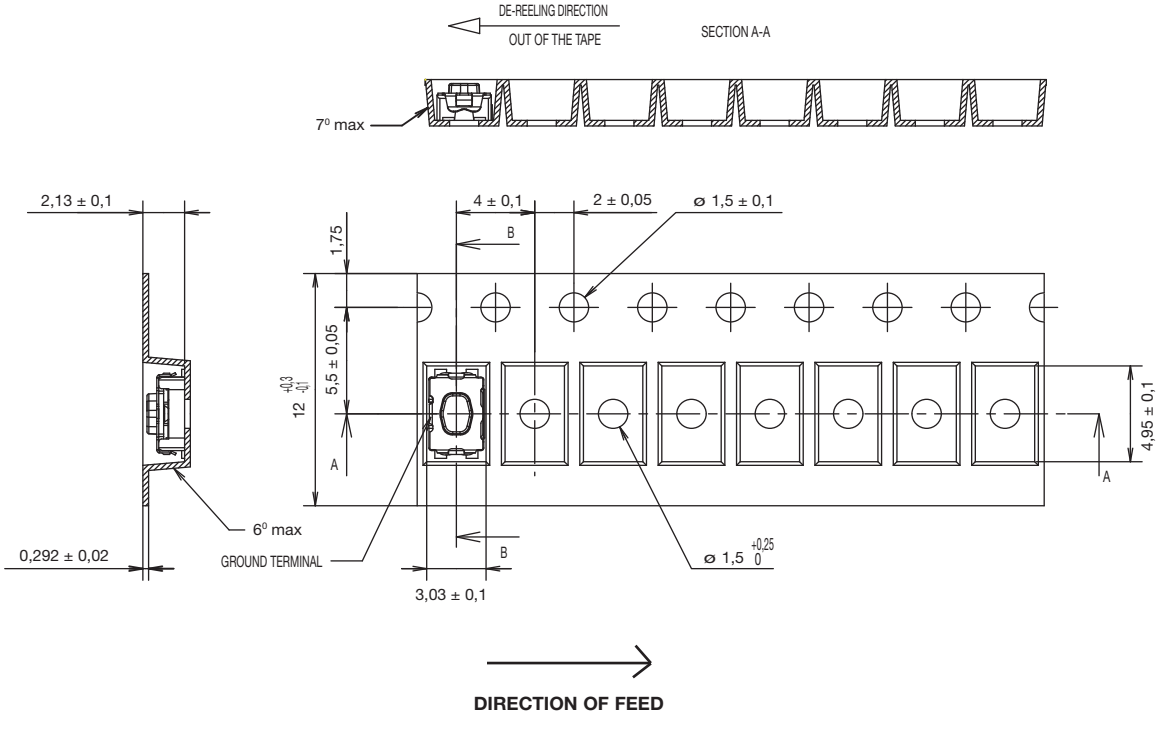

First Angle Projection

Dimensions are shown: mm
Specifications and dimensions subject to change

Features/Benefits

- ***Small footprint***
- ***4 actuation forces***
- ***Excellent tactile feel***
- ***Ultra low current capabilities***
- ***IP40***

Typical Applications

- ***Automotive***
- ***Industrial electronics***
- ***Medical equipment***

Specification

FUNCTION: momentary action
CONTACT ARRANGEMENT: 1 make contact = SPST, N.O.
TERMINALS: Gullwing type for SMT

Mechanical

Type G and NG See description below	Operating force N (grs)	Operating life (cycles)	Travel (mm)
KMR411 LFS	1.2 (120) ± 0.30	100,000	0.20 mm ± 0.1
KMR411 ULC LFS	1.2 (120) ± 0.30	100,000	0.20 mm ± 0.1
KMR413 LFG	1.2 (120) ± 0.30	100,000	0.20 mm ± 0.1
KMR413 ULC LFG	1.2 (120) ± 0.30	100,000	0.20 mm ± 0.1
KMR421 LFS	2.0 (200) ± 0.50	100,000	0.25 mm ± 0.1
KMR421 ULC LFS	2.0 (200) ± 0.50	100,000	0.25 mm ± 0.1
KMR423 LFG	2.0 (200) ± 0.50	100,000	0.25 mm ± 0.1
KMR423 ULC LFG	2.0 (200) ± 0.50	100,000	0.25 mm ± 0.1
KMR431 LFS	3.0 (300) ± 0.75	100,000	0.25 mm ± 0.1
KMR431 ULC LFS	3.0 (300) ± 0.75	100,000	0.25 mm ± 0.1
KMR432 LFS	3.0 (300) ± 0.75	300,000	0.25 mm ± 0.1
KMR432ULC LFS	3.0 (300) ± 0.75	300,000	0.25 mm ± 0.1
KMR433 LFG	3.0 (300) ± 0.75	100,000	0.25 mm ± 0.1
KMR433ULC LFG	3.0 (300) ± 0.75	100,000	0.25 mm ± 0.1
KMR441 LFS	4.0 (400) ± 1.00	100,000	0.30 mm ± 0.1
KMR441 ULC LFS	4.0 (400) ± 1.00	100,000	0.30 mm ± 0.1
KMR442 LFS	4.0 (400) ± 1.00	200,000	0.30 mm ± 0.1
KMR442 ULC LFS	4.0 (400) ± 1.00	200,000	0.30 mm ± 0.1
KMR443 LFG	4.0 (400) ± 1.00	100,000	0.30 mm ± 0.1
KMR443 ULC LFG	4.0 (400) ± 1.00	100,000	0.30 mm ± 0.1

Electrical

	Silver	Gold
MAXIMUM POWER:	1 VA	0.2 VA
MAXIMUM VOLTAGE:	32 VDC	32 VDC
MINIMUM VOLTAGE:	20 mVDC	20 mVDC
MAXIMUM CURRENT:	50 mA	10 mA
MINIMUM CURRENT:	1 mA*	1 mA*
DIELECTRIC STRENGTH:	≥ 250 Vrms	
CONTACT RESISTANCE:	≤ 100 mΩ	
INSULATION RESISTANCE:	≥ 1GΩ	
BOUNCE TIME:	≤ 3 ms	

*For ULC version minimum current is 1µA at 1.8 VDC

Environmental

	Silver	Gold
OPERATING TEMPERATURE:	-40˚C to 85˚C	-40˚C to 125˚C
STORAGE TEMPERATURE:	-55˚C to 85˚C	-55˚C to 125˚C

Process

Infrared Reflow Soldering in accordance with IEC61760-1

Packaging

In reels of 6,000 pieces
External diameter 330 mm ± 2 mm

NOTE: Specifications listed above are for switches with standard options.
For information on specific and custom switches, consult Customer Service Center.

TACTILE FEELING: KMR 4 series with actuation force in 2N - 3N - 4N: ≥ 25%
KMR 4 series with actuation force in 1.2N: ≥ 20%

Part Number Description

For any part number different from those listed above, please consult your local representative.

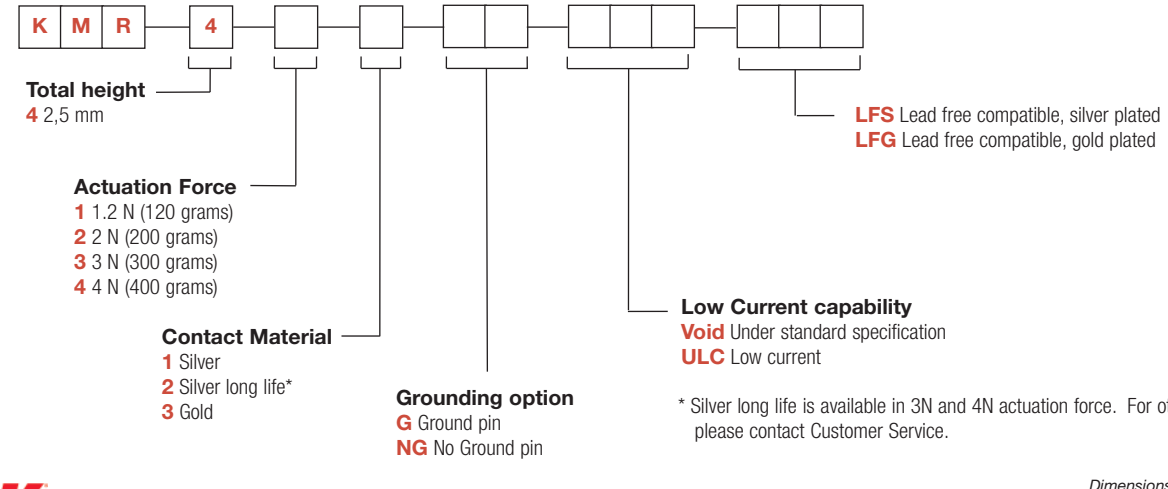

* Silver long life is available in 3N and 4N actuation force. For other versions, please contact Customer Service.

Dimensions are shown: mm
Specifications and dimensions subject to change

KMR 4 Series - 2.5 mm height

PCB layout shown with ground pin option

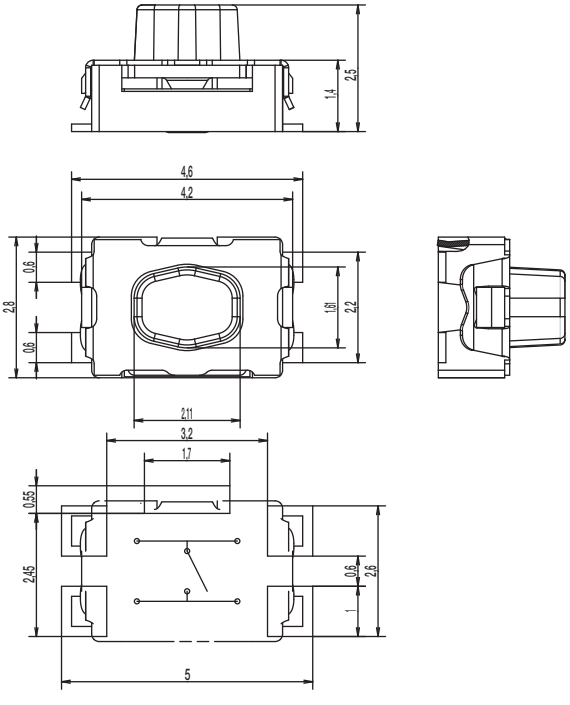

TAPE & REEL

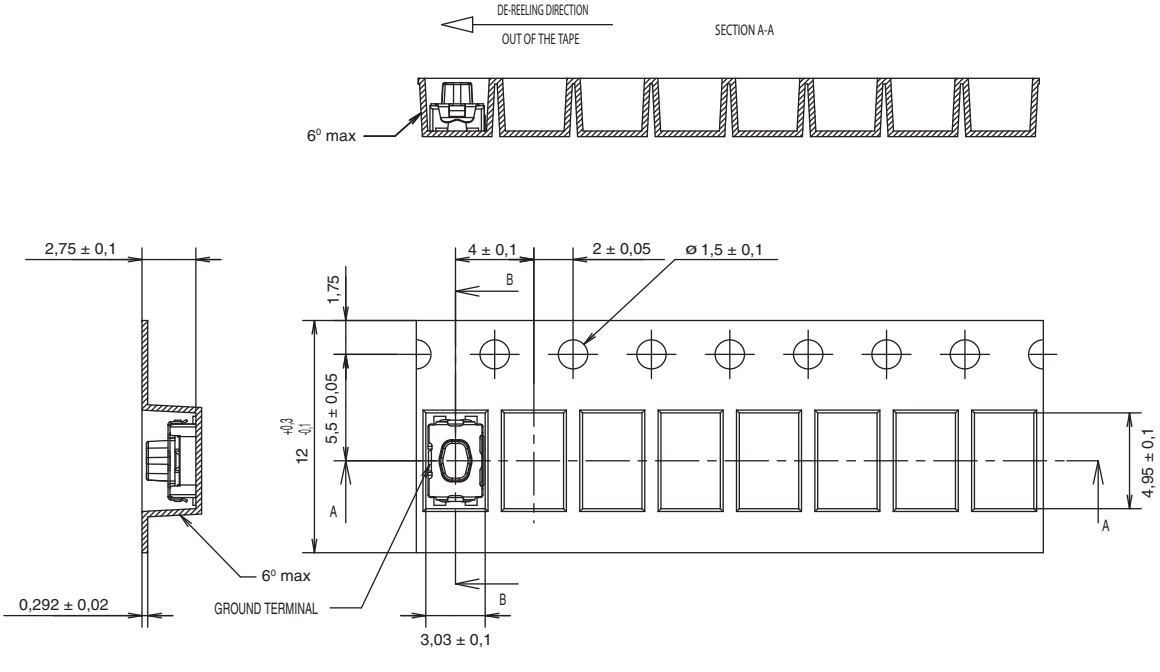

First Angle Projection

Dimensions are shown: mm
Specifications and dimensions subject to change

Features/Benefits

- *Watertight IP67*
- *Standard and long life versions*
- *No ground pin*
- *Ultra low current capabilities*
- *Excellent tactile feel*

Typical Applications

- *Automotive*
- *Medical*
- *Consumer*
- *Industrial*

Specification

FUNCTION: momentary action
CONTACT ARRANGEMENT: 1 make contact = SPST, N.O.
TERMINALS: Gullwing type for SMT

Mechanical

Type NG See description below	Operating force N (grs)	Operating life (cycles)	Travel (mm)
KMR611NG LFS	1.2 (120) ± 0.30	200,000	0.20 mm ± 0.1
KMR611NG ULC LFS	1.2 (120) ± 0.30	200,000	0.20 mm ± 0.1
KMR613NG LFG	1.2 (120) ± 0.30	200,000	0.20 mm ± 0.1
KMR613NG ULC LFG	1.2 (120) ± 0.30	200,000	0.20 mm ± 0.1
KMR621NG LFS	2.0 (200) ± 0.50	200,000	0.25 mm ± 0.1
KMR621NG ULC LFS	2.0 (200) ± 0.50	200,000	0.25 mm ± 0.1
KMR623NG LFG	2.0 (200) ± 0.50	200,000	0.25 mm ± 0.1
KMR623NG ULC LFG	2.0 (200) ± 0.50	200,000	0.25 mm ± 0.1
KMR631NG LFS	3.0 (300) ± 0.75	150,000	0.25 mm ± 0.1
KMR631NG ULC LFS	3.0 (300) ± 0.75	150,000	0.25 mm ± 0.1
KMR632NG LFS	3.0 (300) ± 0.75	300,000	0.25 mm ± 0.1
KMR632NG ULC LFS	3.0 (300) ± 0.75	300,000	0.25 mm ± 0.1
KMR633NG LFG	3.0 (300) ± 0.75	150,000	0.25 mm ± 0.1
KMR633NG ULC LFG	3.0 (300) ± 0.75	150,000	0.25 mm ± 0.1
KMR641NG LFS	4.0 (400) ± 1.00	100,000	0.30 mm ± 0.1
KMR641NG ULC LFS	4.0 (400) ± 1.00	100,000	0.30 mm ± 0.1
KMR642NG LFS	4.0 (400) ± 1.00	200,000	0.30 mm ± 0.1
KMR642NG ULC LFS	4.0 (400) ± 1.00	200,000	0.30 mm ± 0.1
KMR643NG LFG	4.0 (400) ± 1.00	100,000	0.30 mm ± 0.1
KMR643NG ULC LFG	4.0 (400) ± 1.00	100,000	0.30 mm ± 0.1

TACTILE FEELING: KMR 6 series with actuation force in 2N - 3N - 4N: ≥ 30%
KMR 6 series with actuation force in 1.2N: ≥ 20%

Electrical

	Silver	Gold
MAXIMUM POWER:	1 VA	0.2 VA
MAXIMUM VOLTAGE:	32 VDC	32 VDC
MINIMUM VOLTAGE:	20 mVDC	20 mVDC
MAXIMUM CURRENT:	50 mA	10 mA
MINIMUM CURRENT:	1 mA*	1 mA*
DIELECTRIC STRENGTH:	≥ 250 Vrms	
CONTACT RESISTANCE:	≤ 100 mΩ	
INSULATION RESISTANCE:	≥ 1GΩ	
BOUNCE TIME:	≤ 3 ms	

*For ULC version minimum current is 1µA at 1.8 VDC

Environmental

	Silver	Gold
OPERATING TEMPERATURE:	-40˚C to 85˚C	-40˚C to 125˚C
STORAGE TEMPERATURE:	-55˚C to 85˚C	-55˚C to 125˚C

Process

Infrared Reflow Soldering in accordance with IEC61760-1

Packaging

In reels of 7,000 pieces
External diameter 330 mm ± 2 mm

NOTE: Specifications listed above are for switches with standard options.
For information on specific and custom switches, consult Customer Service Center.

Part Number Description

For any part number different from those listed above, please consult your local representative.

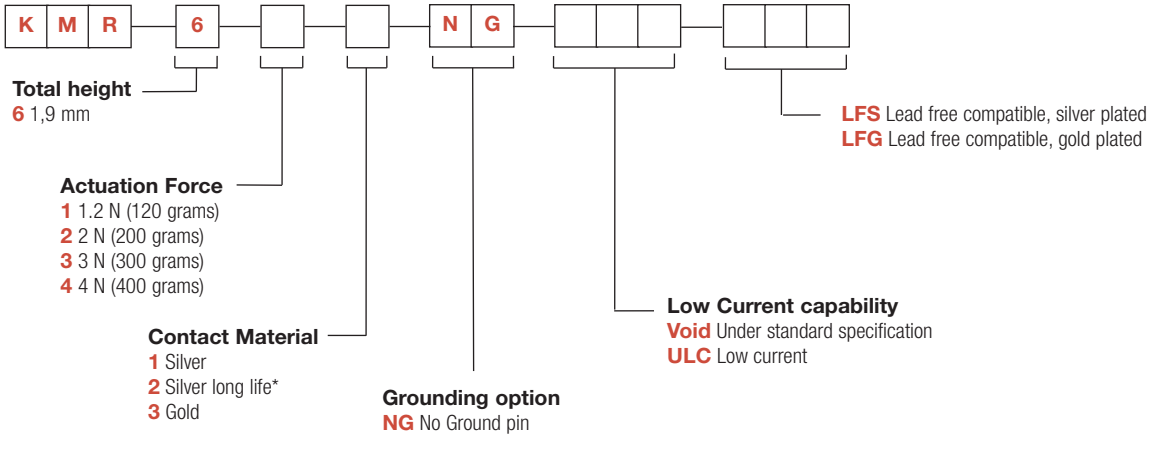

* Silver long life is available in 3N and 4N actuation force. For other versions, please contact Customer Service.

KMR 6 Series
Microminiature SMT Top Actuated IP67

KMR 6 Series - 1.9 mm height

PCB layout shown with ground pin option

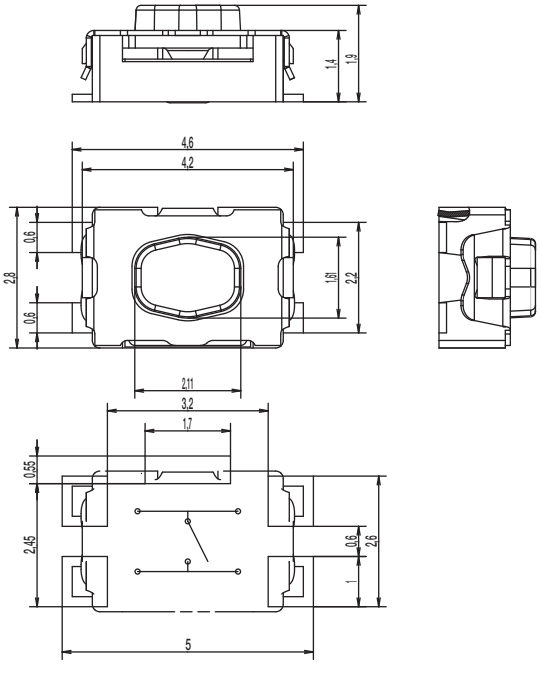

TAPE & REEL

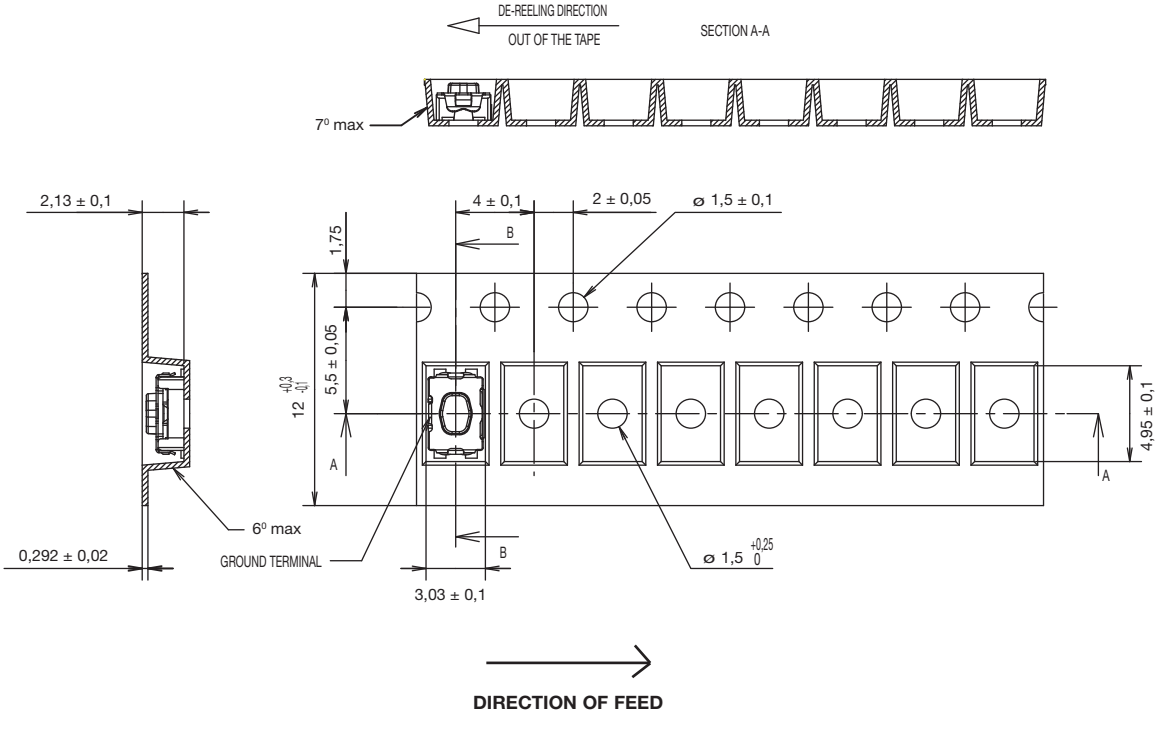

Features/Benefits

- *Watertight IP67*
- *Standard and long life versions*
- *No ground pin*
- *Ultra low current capabilities*
- *Excellent tactile feel*

Typical Applications

- *Automotive*
- *Medical*
- *Consumer*
- *Industrial*

Specification

FUNCTION: momentary action
CONTACT ARRANGEMENT: 1 make contact = SPST, N.O.
TERMINALS: Gullwing type for SMT

Mechanical

Type NG See description below	Operating force N (grs)	Operating life (cycles)	Travel (mm)
KMR711NG LFS	1.2 (120) ± 0.30	100,000	0.20 mm ± 0.1
KMR711NG ULC LFS	1.2 (120) ± 0.30	100,000	0.20 mm ± 0.1
KMR713NG LFG	1.2 (120) ± 0.30	100,000	0.20 mm ± 0.1
KMR713NG ULC LFG	1.2 (120) ± 0.30	100,000	0.20 mm ± 0.1
KMR721NG LFS	2.0 (200) ± 0.50	100,000	0.25 mm ± 0.1
KMR721NG ULC LFS	2.0 (200) ± 0.50	100,000	0.25 mm ± 0.1
KMR723NG LFG	2.0 (200) ± 0.50	100,000	0.25 mm ± 0.1
KMR723NG ULC LFG	2.0 (200) ± 0.50	100,000	0.25 mm ± 0.1
KMR731NG LFS	3.0 (300) ± 0.75	100,000	0.25 mm ± 0.1
KMR731NG ULC LFS	3.0 (300) ± 0.75	100,000	0.25 mm ± 0.1
KMR732NG LFS	3.0 (300) ± 0.75	300,000	0.25 mm ± 0.1
KMR732NG ULC LFS	3.0 (300) ± 0.75	300,000	0.25 mm ± 0.1
KMR733NG LFG	3.0 (300) ± 0.75	100,000	0.25 mm ± 0.1
KMR733NG ULC LFG	3.0 (300) ± 0.75	100,000	0.25 mm ± 0.1
KMR741NG LFS	4.0 (400) ± 1.00	100,000	0.30 mm ± 0.1
KMR741NG ULC LFS	4.0 (400) ± 1.00	100,000	0.30 mm ± 0.1
KMR742NG LFS	4.0 (400) ± 1.00	200,000	0.30 mm ± 0.1
KMR742NG ULC LFS	4.0 (400) ± 1.00	200,000	0.30 mm ± 0.1
KMR743NG LFG	4.0 (400) ± 1.00	100,000	0.30 mm ± 0.1
KMR743NG ULC LFG	4.0 (400) ± 1.00	100,000	0.30 mm ± 0.1

Electrical

	Silver	Gold
MAXIMUM POWER:	1 VA	0.2 VA
MAXIMUM VOLTAGE:	32 VDC	32 VDC
MINIMUM VOLTAGE:	20 mVDC	20 mVDC
MAXIMUM CURRENT:	50 mA	10 mA
MINIMUM CURRENT:	1 mA*	1 mA*
DIELECTRIC STRENGTH:	≥ 250 Vrms	
CONTACT RESISTANCE:	≤ 100 mΩ	
INSULATION RESISTANCE:	≥ 1GΩ	
BOUNCE TIME:	≤ 3 ms	

*For ULC version minimum current is 1µA at 1.8 VDC

Environmental

	Silver	Gold
OPERATING TEMPERATURE:	-40°C to 85°C	-40°C to 125°C
STORAGE TEMPERATURE:	-55°C to 85°C	-55°C to 125°C

Process

Infrared Reflow Soldering in accordance with IEC61760-1

Packaging

In reels of 6,000 pieces
External diameter 330 mm ± 2 mm

NOTE: Specifications listed above are for switches with standard options.
For information on specific and custom switches, consult Customer Service Center.

TACTILE FEELING: KMR 7 series with actuation force in 2N - 3N - 4N: ≥ 25%
KMR 7 series with actuation force in 1.2N: ≥ 20%

Part Number Description

For any part number different from those listed above, please consult your local representative.

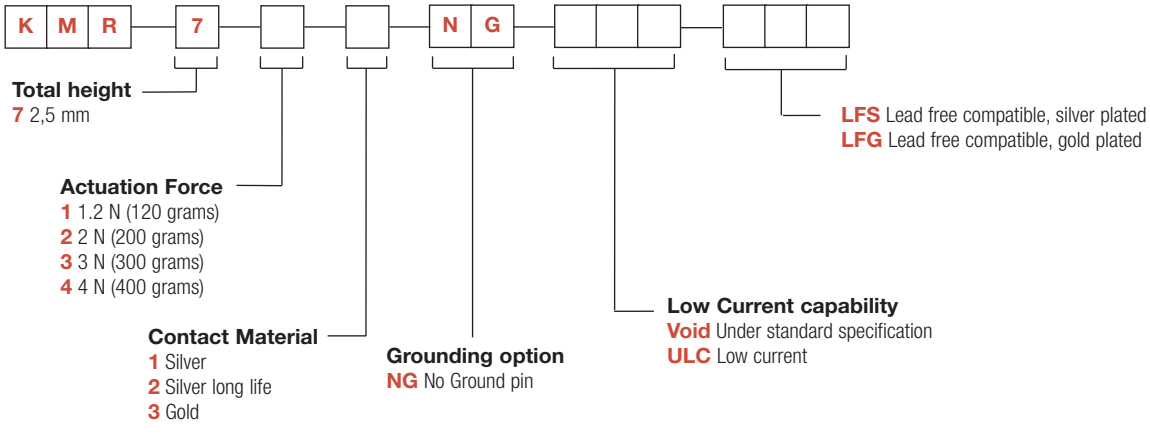

* Silver long life is available in 3N and 4N actuation force. For other versions, please contact Customer Service.

Dimensions are shown: mm
Specifications and dimensions subject to change

KMR 7 Series - 2.5 mm height

PCB layout shown with ground pin option

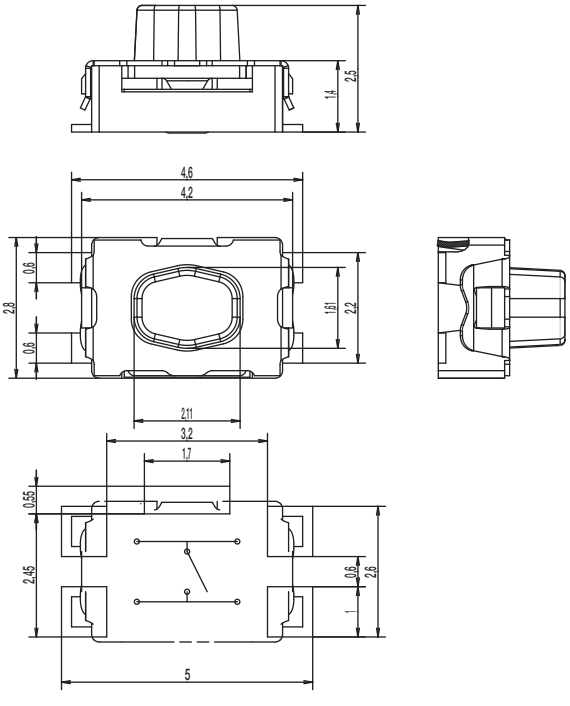

TAPE & REEL

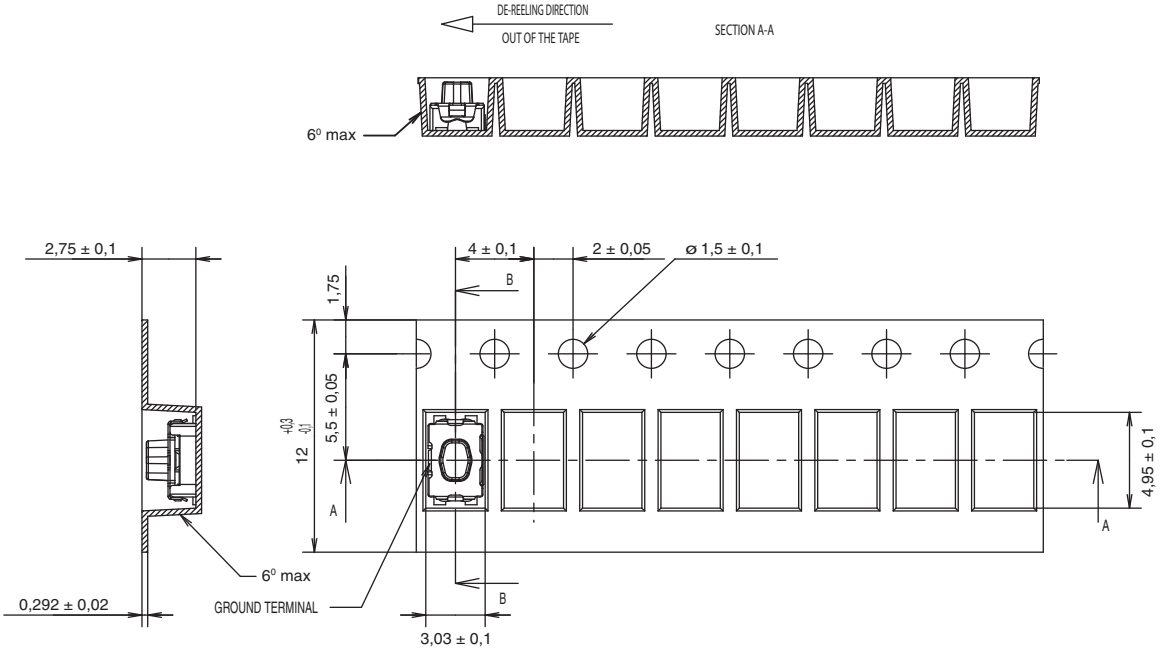

Features/Benefits

- *Small footprint*
- *3 actuation forces*
- *Excellent tactile feel*
- *Hard actuator*
- *IP40*

Typical Applications

- *Automotive*
- *Mobile phones*
- *Industrial electronics*
- *Medical equipment*

Specification

FUNCTION: momentary action
CONTACT ARRANGEMENT: 1 make contact = SPST, N.O.
TERMINALS: Gullwing type for SMT

Mechanical

Type G and NG See description below	Operating force N (grs)	Operating life (cycles)	Travel (mm)
KMR811G LFS	1.2 (120) ± 0.30	200,000	0.20 mm ± 0.1
KMR821G LFS	2.0 (200) ± 0.50	200,000	0.25 mm ± 0.1
KMR831G LFS	3.0 (300) ± 0.75	150,000	0.25 mm ± 0.1
KMR831NG ULC LFS	3.0 (300) ± 0.75	150,000	0.25 mm ± 0.1

TACTILE FEELING:

KMR 8 series with actuation force in 2N - 3N - 4N: ≥ 30%
KMR 8 series with actuation force in 1.2N: ≥ 20%

Electrical

	Silver
MAXIMUM POWER:	1 VA
MAXIMUM VOLTAGE:	32 VDC
MINIMUM VOLTAGE:	20 mVDC
MAXIMUM CURRENT:	50 mA
MINIMUM CURRENT:	1 mA*
DIELECTRIC STRENGTH:	≥ 250 Vrms
CONTACT RESISTANCE:	≤ 100 mΩ
INSULATION RESISTANCE:	≥ 1GΩ
BOUNCE TIME:	≤ 3 ms

*For ULC version minimum current is 1µA at 1.8 VDC

Environmental

	Silver
OPERATING TEMPERATURE:	-40˚C to 85˚C
STORAGE TEMPERATURE:	-55˚C to 85˚C

Process

Infrared Reflow Soldering in accordance with IEC61760-1

Packaging

In reels of 7,000 pieces
External diameter 330 mm ± 2 mm

NOTE: Specifications listed above are for switches with standard options.
For information on specific and custom switches, consult Customer Service Center.

Part Number Description

For any part number different from those listed above, please consult your local representative.

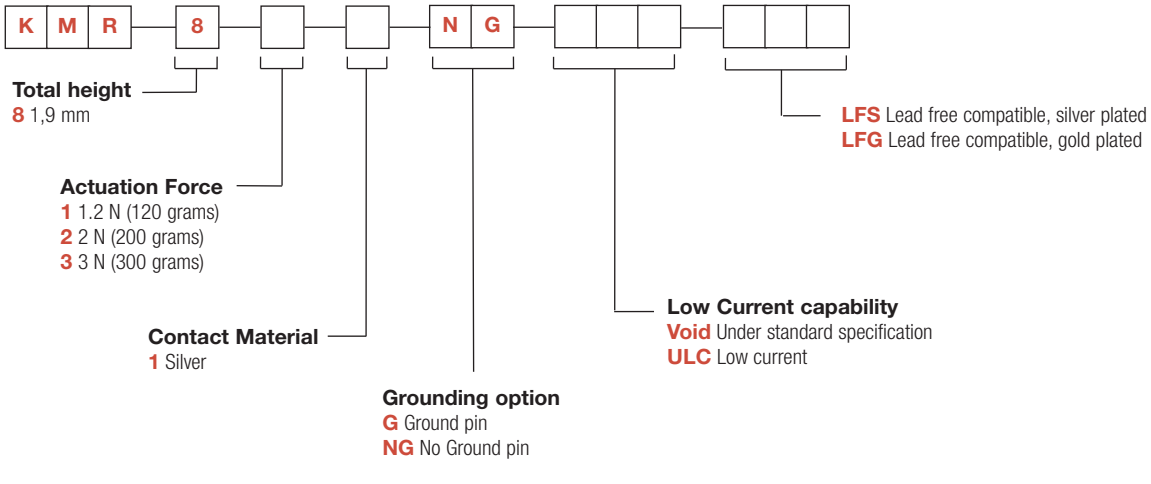

KMR 8 Series
Microminiature SMT Top Actuated

G - Ground Pin

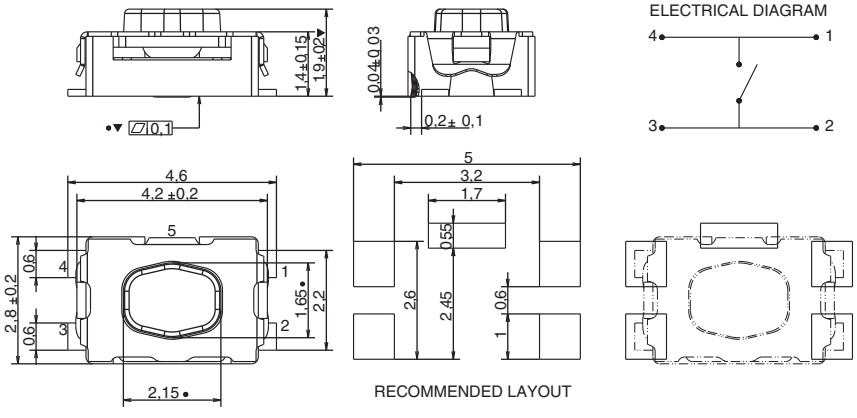

NG - No Ground Pin

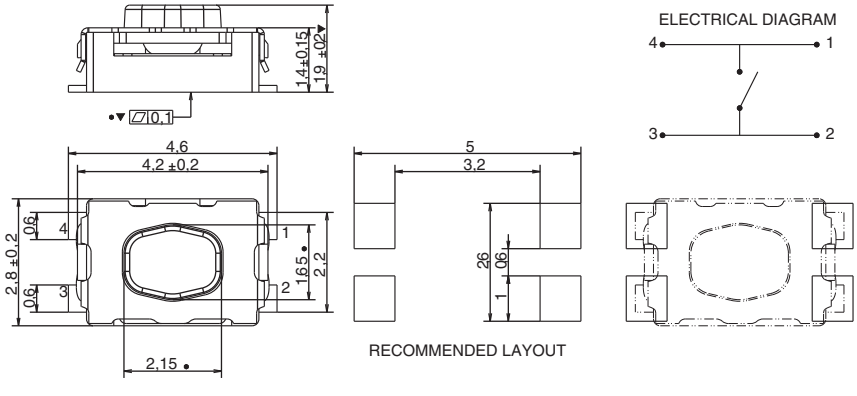

TAPE & REEL

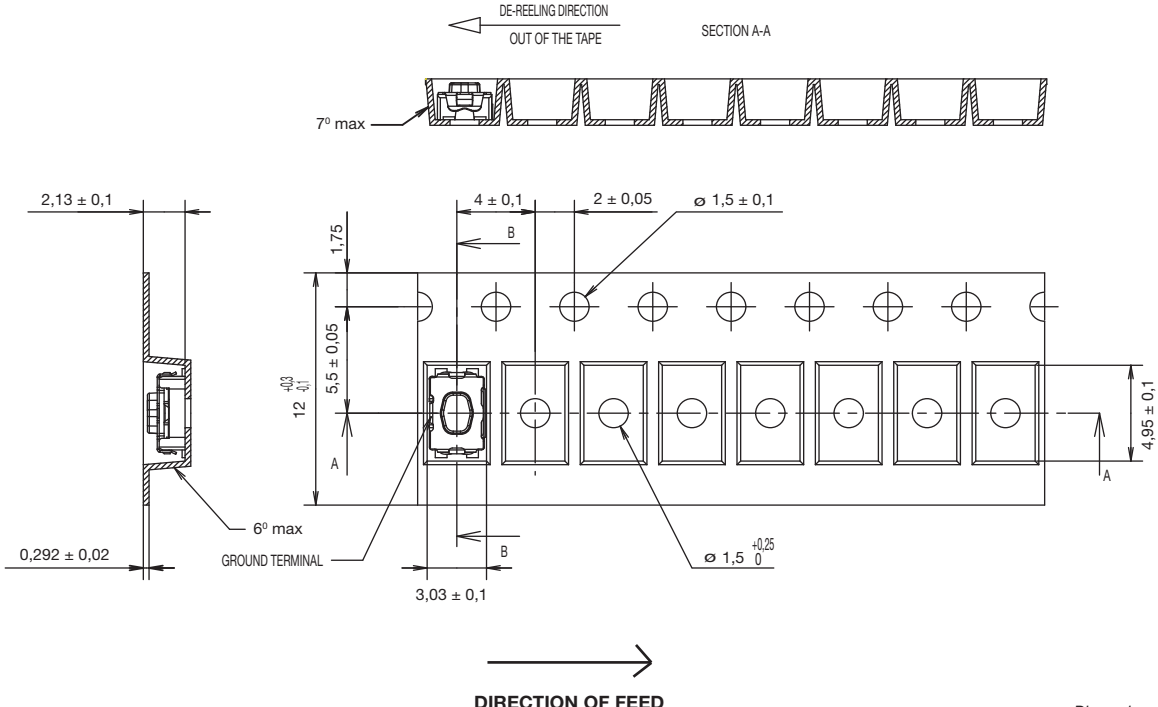

Dimensions are shown: mm
Specifications and dimensions subject to change

Features/Benefits

- *Compact size*
- *Excellent tactile feel*
- *ESD protection*
- *Positioning pegs for stability*
- *RoHS compliant and compatible*

Typical Applications

- *Mobile phones*
- *Medical handheld monitors*
- *Consumer electronics*
- *Telecommunication networks*

Specification

FUNCTION: Momentary
CONTACT ARRANGEMENT: SPST, N.O.
TERMINALS: Gullwing type for SMT
IP40 Sealed

Mechanical

OVERLOAD: 20N
TACTILE FEELING: 15% min. for the 2N version
25% min for the 2.5N version

Type	Operating force Newtons (grams)	Operating life (operations)	Travel
KMS221G/GP	2N (200) ± 0.5	100 K cycles	0,25 ± 0,15
KMS223G/GP	2N (200) ± 0.5	100 K cycles	0,25 ± 0,15
KMS231G/GP	3N (300) ± 0.6	100 K cycles	0,3 ± 0,15
KMS233G/GP	3N (300) ± 0.6	100 K cycles	0,3 ± 0,15

Note: Specifications listed above are for switches with standard options. For information on specific and custom switches, consult Customer Service Center.

Packaging

Tape and reels in reels of 3,000 pieces.
External diameter 330mm ± 2mm.

Electrical

	Silver	Gold
MAXIMUM POWER:	1 VA	0.2 VA
MAXIMUM VOLTAGE:	32 VDC	32 VDC
MAXIMUM CURRENT DC:	50 mA	10 mA
MINIMUM CURRENT DC:	1 mA	1 mA

DIELECTRIC STRENGTH: 250 VDC
CONTACT RESISTANCE: ≤100 mΩ
INSULATION RESISTANCE: 10^9 Ω
BOUNCE TIME: ≤ 3 ms

Environmental

	Silver	Gold
OPERATING TEMPERATURE:	-40˚C to 85˚C	-40˚C to 125˚C
STORAGE TEMPERATURE:	-55˚C to 85˚C	-55˚C to 125˚C

Process

Infared reflow soldering in accordance with IEC 61760-1

How To Order

Our easy build-a-switch concept allows you to mix and match options to create the switch you need. To order, select desired option from each category and place it in the appropriate box.

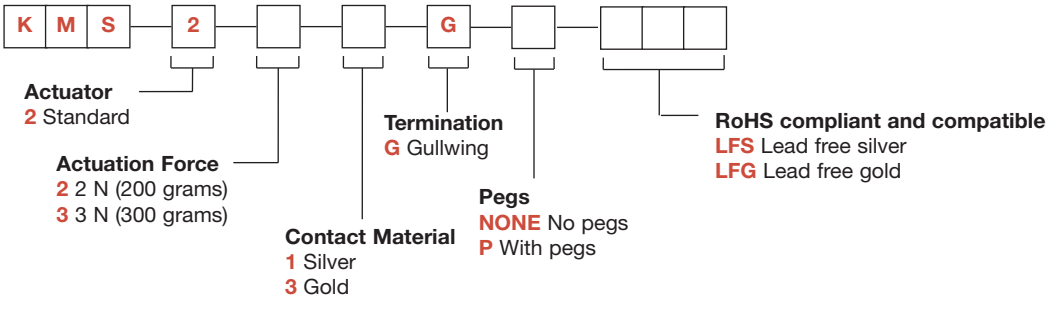

KMS Series
Microminiature SMT Side Actuated

KMS

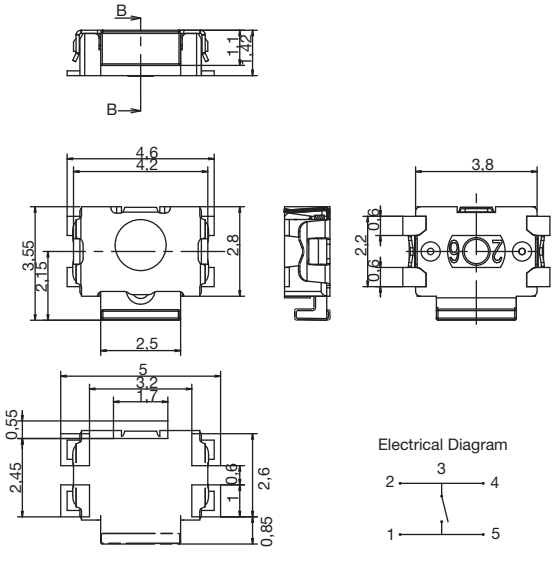

KMS WITH PEGS

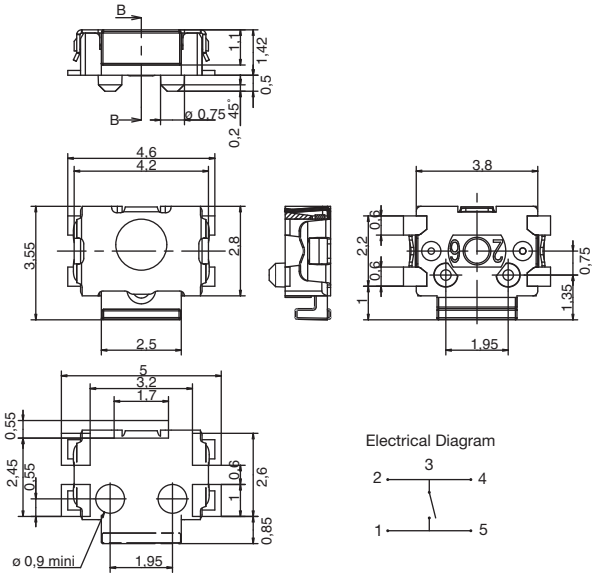

TAPE & REEL

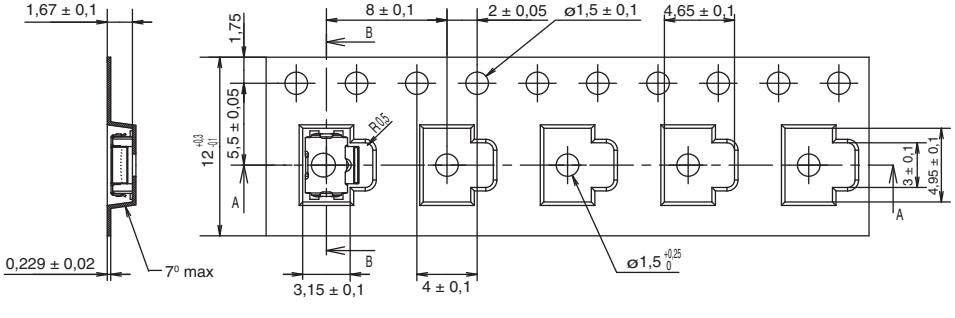

WITH PEGS

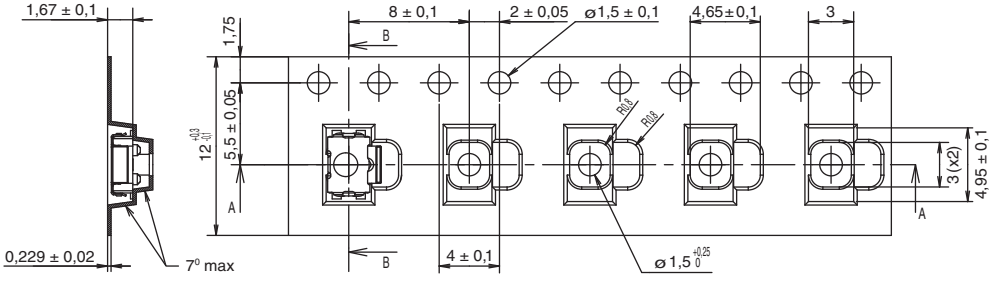

DIRECTION OF FEED

First Angle Projection

Dimensions are shown: mm
Specifications and dimensions subject to change

PTS 525 Series
Microminiature Tact Switch for SMT

Features/Benefits

- ***0.8 & 1.5 mm actuator height***
- ***Ruggedized package in a compact size***
- ***High number of cycles***

Typical Applications

- ***Consumer products***
- ***Instrumentation***
- ***Remote controls***

Specification

FUNCTION: Momentary action
CONTACT ARRANGEMENT: 1 make contact = SPST, N.O.

Electrical

MAXIMUM VOLTAGE:	15 VDC
MAXIMUM CURRENT DC:	20 mA
DIELECTRIC STRENGTH:	250 VA C (1mn)
CONTACT RESISTANCE:	≤ 100 mΩ
INSULATION RESISTANCE:	≥ 100 MΩ
BOUNCE TIME:	≤ 10 ms

Environmental

OPERATING TEMPERATURE: -20˚C to 70˚C

Process

SOLDERING: This component is suited to the following methods:
Infrared Reflow Soldering in accordance with IEC61760-1

Packaging

Switches in reels of:
5,000 pieces in 0.8 mm height
4,000 pieces in 1.5 mm height
Dimensions of reels according to EIA 481B
External diameter 330 mm

NOTE: Specifications listed above are for switches with standard options.
For information on specific and custom switches, consult Customer Service Center.

How To Order

Please see chart below for full part numbers.

Part Number	Height (mm)	Leads Shape	Ground Pin	Force	Travel (mm)	Operating Life
PTS525 SM08 SMTR 2 LFS	0.8	G	No	160 gf ± 50 gf	0.25 ± 0.2	1,000,000
PTS525 SK08 SMTR 2 LFS	0.8	G	No	260 gf ± 50 gf	0.25 ± 0.2	200,000
PTS525 SM15 SMTR 2 LFS	1.5	G	No	160 gf ± 50 gf	0.25 ± 0.2	1,000,000
PTS525 SK15 SMTR 2 LFS	1.5	G	No	260 gf ± 50 gf	0.25 ± 0.2	500,000
PTS525 SMG15 SMTR 2 LFS	1.5	G	Yes	160 gf ± 50 gf	0.25 ± 0.2	1,000,000
PTS525 SKG15 SMTR 2 LFS	1.5	G	Yes	260 gf ± 50 gf	0.25 ± 0.2	500,000
PTS525 SMG15J SMTR 2 LFS	1.5	J	Yes	160 gf ± 50 gf	0.25 ± 0.2	1,000,000
PTS525 SKG15J SMTR 2 LFS	1.5	J	Yes	260 gf ± 50 gf	0.25 ± 0.2	500,000

First Angle Projection

Dimensions are shown: mm
Specifications and dimensions subject to change

PTS 525 Series
Microminiature Tact Switch for SMT

PTS525 SM08 SMTR2 LFS
PTS525 SK08 SMTR2 LFS

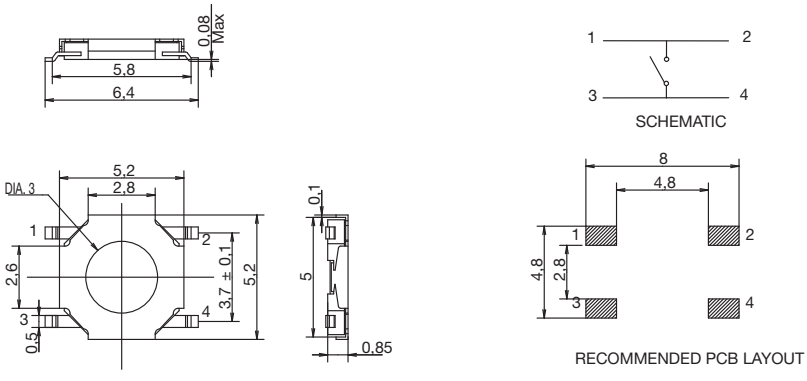

PTS525 SM15 SMTR2 LFS
PTS525 SK15 SMTR2 LFS

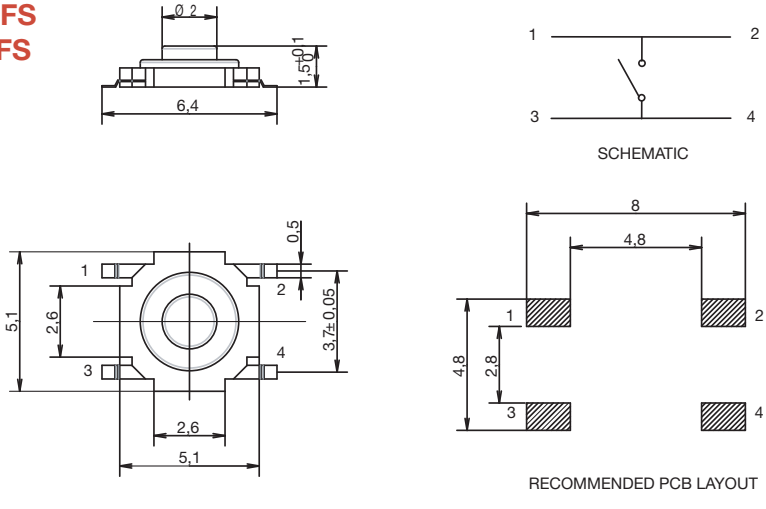

PTS525 SMG15 SMTR2 LFS
PTS525 SKG15 SMTR2 LFS

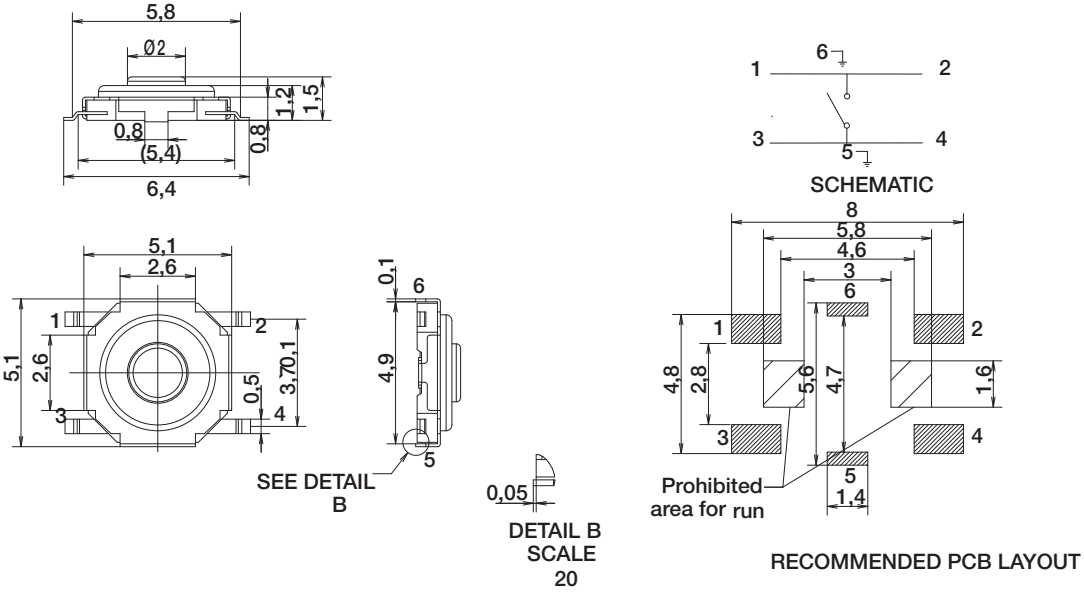

Dimensions are shown: mm
Specifications and dimensions subject to change

PTS525 SMG15J SMTR2 LFS
PTS525 SKG15J SMTR2 LFS

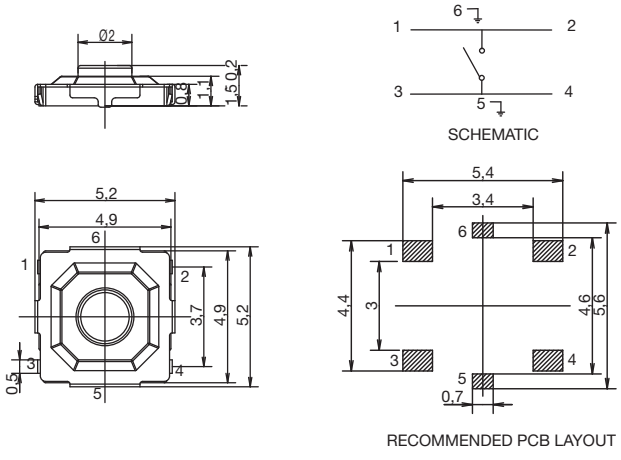

TAPE & REEL

0.8 mm height
5,000 pieces per reel

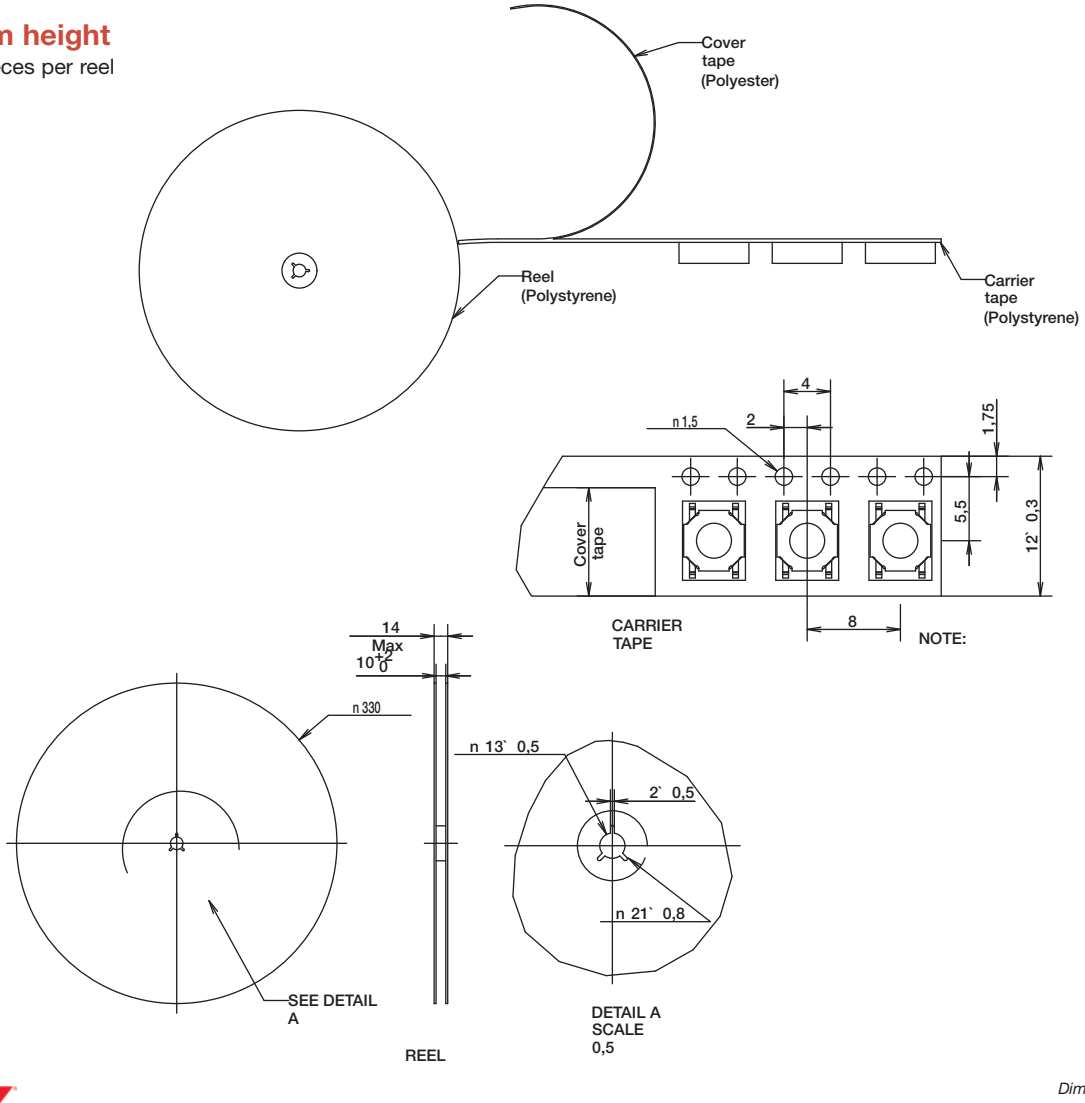

TAPE & REEL

1.5 mm height

4,000 pieces per reel

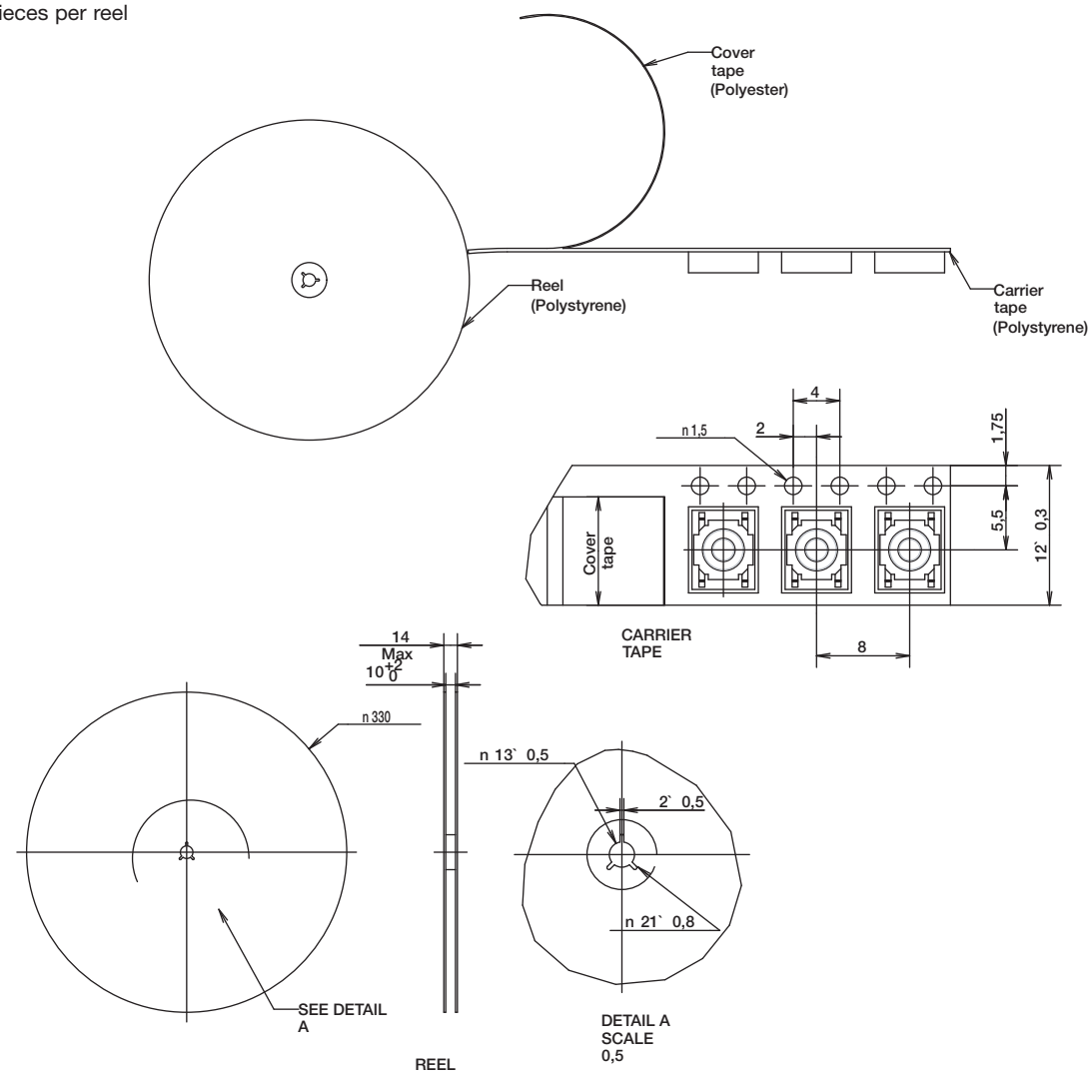

First Angle Projection

Dimensions are shown: mm
Specifications and dimensions subject to change

PTS 530 Series
Ultra Low Profile SMT Top Actuated

Features/Benefits

- ***4.5 x 4.5 mm footprint***
- ***0.55 mm thickness***
- ***High number of cycles***
- ***Symbol line identification***

Typical Applications

- ***MP3 accessories***
- ***Bluetooth headset***
- ***Remote controls***
- ***Garage door opener***

Specifications

FUNCTION: momentary action
CONTACT ARRANGEMENT: 1 make contact = SPST N.O.
TERMINALS: Gullwing for SMT
TRAVEL: 0.2mm - 0.1 /+ 0.15mm

Part Number	Operating Force (gf)	Operating Life (operations)
PTS530 GN055 SMTR LFS	100 ± 30	1,000,000
PTS530 GM055 SMTR LFS	160 ± 30	1,000,000
PTS530 GH055 SMTR LFS	200 ± 30	200,000
PTS530 GK055 SMTR LFS	260 ± 30	200,000
PTS530 GG065 SMTR LFS	400 ± 70	300,000
PTS530 GS065 SMTR LFS	600 - 50/+100	150,000

Electrical

MAXIMUM VOLTAGE: 12 VDC
MAXIMUM CURRENT DC: 50 mA
DIELECTRIC STRENGTH: 250 VA C (1mn)
CONTACT RESISTANCE: ≤ 100 mΩ
INSULATION RESISTANCE: ≥ 100 MΩ
BOUNCE TIME: ≤ 10 ms

Environmental

OPERATING TEMPERATURE: -40˚C to 85˚C

Process

SOLDERING: This component is suited to the following methods:
Infrared Reflow Soldering in accordance with IEC61760-1

Packaging

Switches in reels of 7,000 pieces.
Dimensions of reels according to EIA 481B
External diameter 330 mm

NOTE: Specifications listed above are for switches with standard options.
For information on specific and custom switches, consult Customer Service Center.

How To Order

Our easy build-a-switch concept allows you to mix and match options to create the switch you need. To order, select desired option from each category and place it in the appropriate box.

For any part number different from those listed above, please consult your local representative.

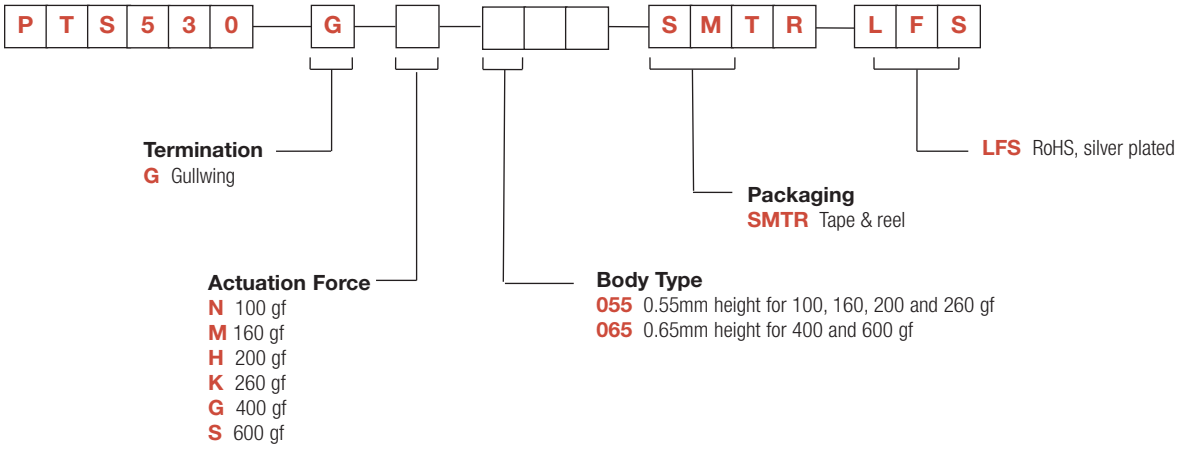

PTS 530 Series
Ultra Low Profile SMT Top Actuated

TERMINATION

G GULLWING

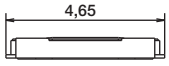

BODY TYPE / ACTUATION FORCE

055 0,55 MM HEIGHT

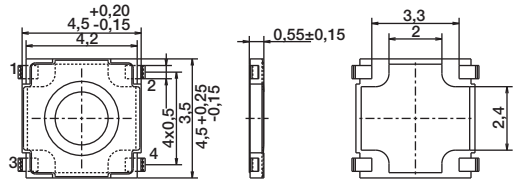

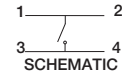

SCHEMATIC

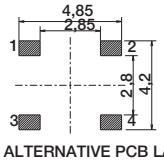

ALTERNATIVE PCB LAYOUT

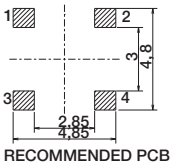

RECOMMENDED PCB LAYOUT

065 0,65 MM HEIGHT

PART NUMBER	HEIGHT $^{+0.1}_{-0.05}$
PTS 530 GS 065 SMTR LFS	0.72
PTS 530 GG 065 SMTR LFS	0.68

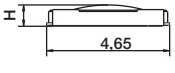

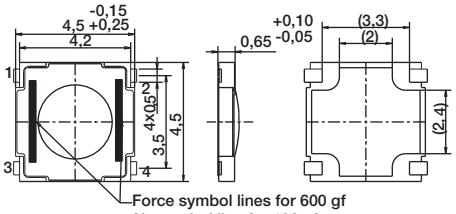

Force symbol lines for 600 gf
No symbol line for 400 gf

Restriction in operation

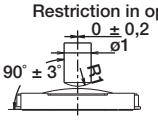

Actuation force identification lines:

N: 100 gf	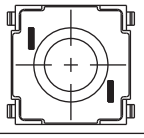
M: 160 gf	No Lines
H: 200 gf	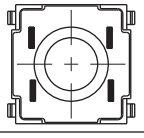
K: 260 gf	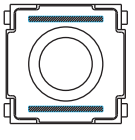

G: 400 gf	No Lines
S: 600 gf	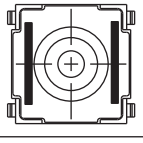

TAPE & REEL

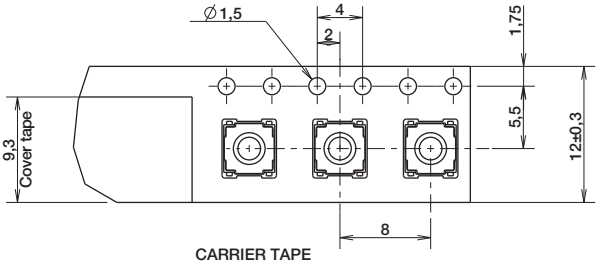

CARRIER TAPE

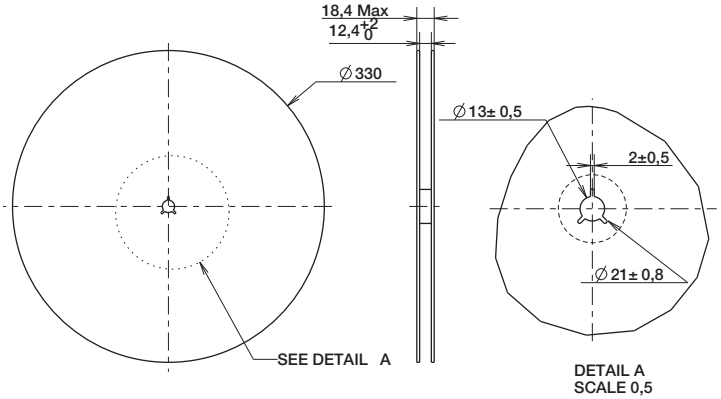

DETAIL A
SCALE 0,5

REEL

Dimensions are shown: mm
Specifications and dimensions subject to change

PTS 540 Series
Ultra Low Profile SMT Top Actuated

Features/Benefits

- ***3.7 x 3.7 mm footprint***
- ***0.35 mm thickness***
- ***High number of cycles***

Typical Applications

- ***MP3 accessories***
- ***Bluetooth headset***
- ***Remote controls***

Specifications

FUNCTION: momentary action
CONTACT ARRANGEMENT: 1 make contact = SPST N.O.
TERMINALS: J type for SMT
TRAVEL: 0.15 mm ± 0.1 mm

Mechanical

Part Number	Operating Force (gf)	Operating Life (operations)
PTS540 JM035 SMTR LFS	160 ± 50	500,000
PTS540 JK035 SMTR LFS	230 ± 50	300,000

Packaging

Switches in reels of 10,000 pieces.
Dimensions of reels according to EIA 481B
External diameter 330 mm

Electrical

MAXIMUM VOLTAGE:	12 VDC
MAXIMUM CURRENT DC:	50 mA
DIELECTRIC STRENGTH:	250 VA C (1mn)
CONTACT RESISTANCE:	≤ 100 mΩ
INSULATION RESISTANCE:	≥ 100 MΩ
BOUNCE TIME:	≤ 10 ms

Environmental

OPERATING TEMPERATURE: -30˚C to 85˚C

Process

SOLDERING: This component is suited to the following methods:
Infrared Reflow Soldering in accordance with IEC61760-1

NOTE: Specifications listed above are for switches with standard options.
For information on specific and custom switches, consult Customer Service Center.

How To Order

Our easy build-a-switch concept allows you to mix and match options to create the switch you need. To order, select desired option from each category and place it in the appropriate box.

For any part number different from those listed above, please consult your local representative.

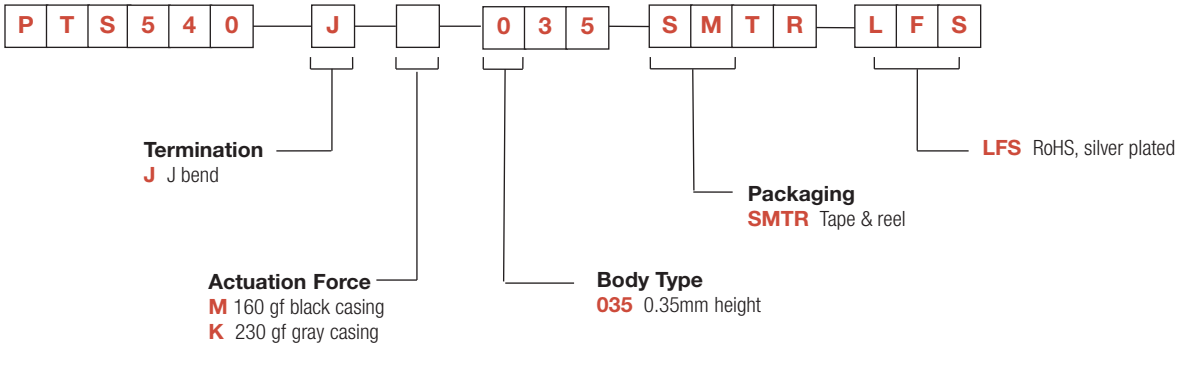

PTS 540 Series
Ultra Low Profile SMT Top Actuated

PTS 540

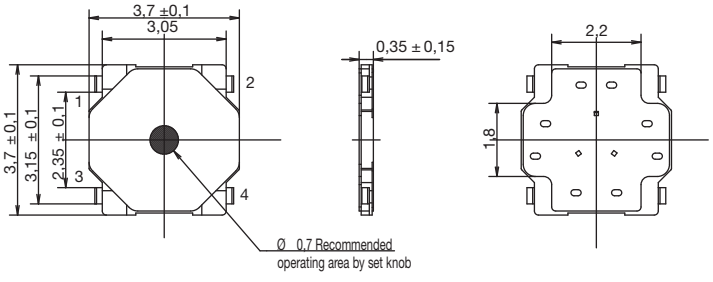

RECOMMENDED PCB

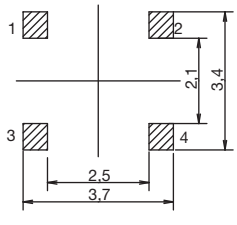

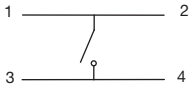

SCHEMATIC

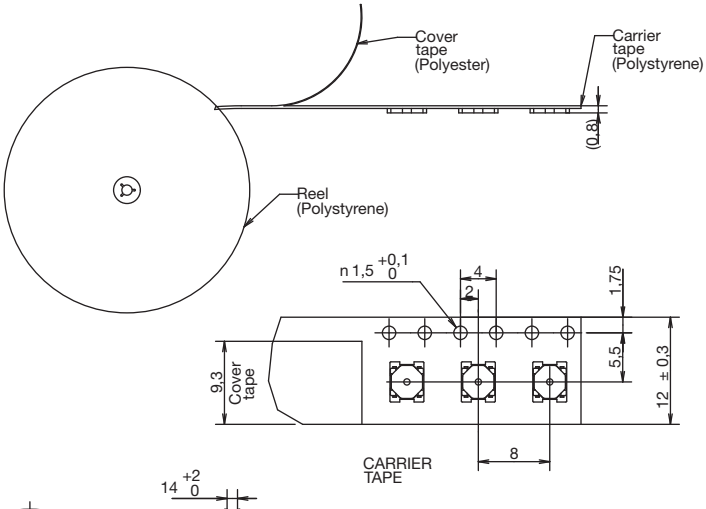

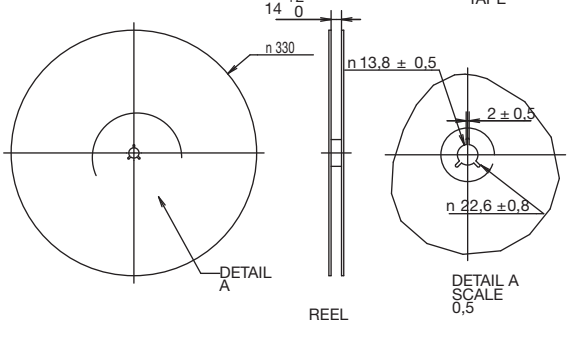

Dimensions are shown: mm
Specifications and dimensions subject to change

PTS 810 Series
Microminiature SMT Top Actuated

Features/Benefits

- ***4.2 x 3.2 mm footprint***
- ***2.5 mm thickness***
- ***High number of cycles***
- ***Color coded actuators***

Typical Applications

- ***Control panels***
- ***Nomad devices***
- ***Remote controls***
- ***Keyless entry system***

Specifications

FUNCTION: momentary action
CONTACT ARRANGEMENT: 1 make contact = SPST N.O.
TERMINALS: J type for SMT
TRAVEL: 160 & 260 gf: 0.15mm ± 0.1mm
400 & 600 gf: 0.20mm ± 0.1mm

	Operating Force (gf)	Operating Life (operations)
PTS810 SJM 250 SMTR LFS	160 ± 50	150,000
PTS810 SJK 250 SMTR LFS	260 ± 70	50,000
PTS810 SJG 250 SMTR LFS	400 ± 100	100,000
PTS810 SJS 250 SMTR LFS	600 ± 150	150,000

Packaging

Switches in reels of 2,900 pieces.
Dimensions of reels according to EIA 481B
External diameter 330 mm

Electrical

MAXIMUM VOLTAGE: 16 VDC
MAXIMUM CURRENT DC: 50 mA
DIELECTRIC STRENGTH: 250 VA C (1mn)
CONTACT RESISTANCE: ≤ 500 mΩ
INSULATION RESISTANCE: ≥ 100 MΩ
BOUNCE TIME: ≤ 10 ms

Environmental

OPERATING TEMPERATURE: -40˚C to 85˚C

Process

SOLDERING: This component is suited to the following methods:
Infrared Reflow Soldering in accordance with IEC61760-1

NOTE: Specifications listed above are for switches with standard options.
For information on specific and custom switches, consult Customer Service Center.

How To Order

Our easy build-a-switch concept allows you to mix and match options to create the switch you need. To order, select desired option from each category and place it in the appropriate box.

For any part number different from those listed above, please consult your local representative.

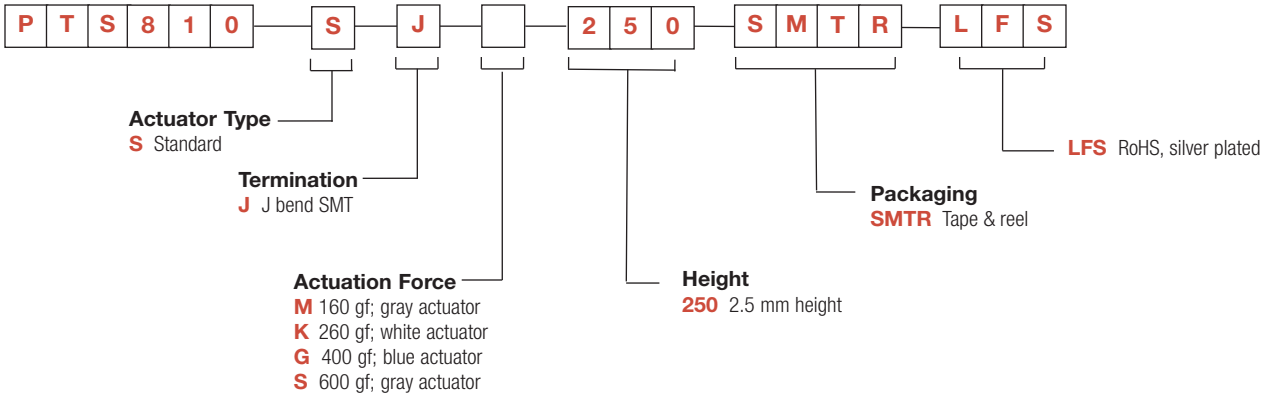

PTS 810 Series
Microminiature SMT Top Actuated

PTS810

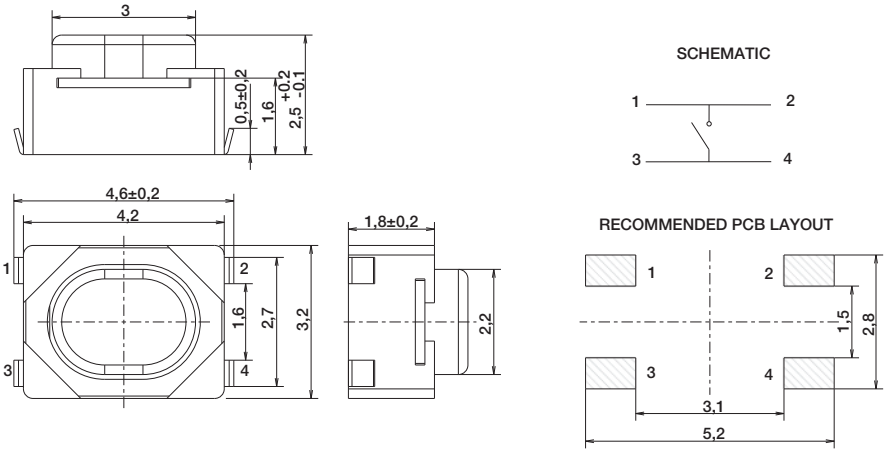

TAPE & REEL

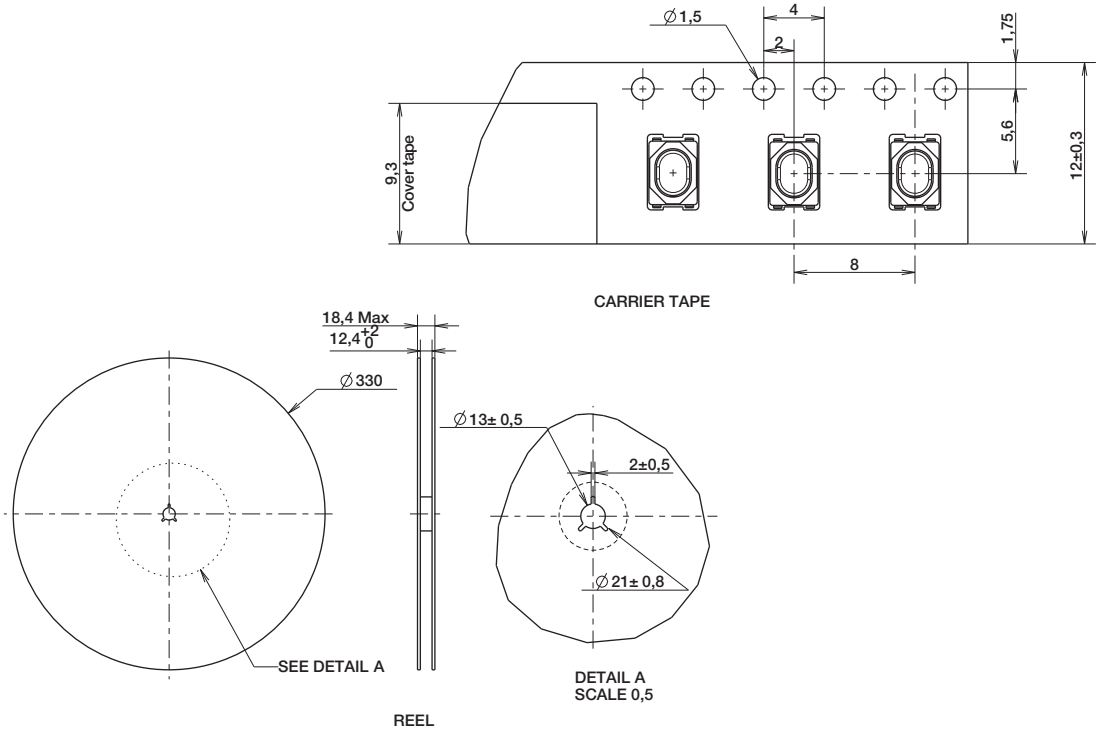

PTS 820 Series
Microminiature SMT Top Actuated

Features/Benefits

- ***3.9 x 2.9 mm footprint***
- ***Three different heights***
- ***High number of cycles***
- ***Reduced footprint***

Typical Applications

- ***Control panels***
- ***Nomad devices***
- ***Remote controls***
- ***Keyless entry system***

Specifications

FUNCTION: momentary action
CONTACT ARRANGEMENT: 1 make contact = SPST N.O.
TERMINALS: J type for SMT
TRAVEL: 0.2mm + 0.1mm / -0.05 mm

	Operating Force (gf)	Life Cycles	Height mm	Pegs
PTS820 J25M SMTR LFS	160 ± 50	200,000	2.5	No
PTS820 J25K SMTR LFS	250 ± 50	100,000	2.5	No
PTS820 J25MP SMTR LFS	160 ± 50	200,000	2.5	Yes
PTS820 J25KP SMTR LFS	250 ± 50	100,000	2.5	Yes
PTS820 J20M SMTR LFS	160 ± 50	200,000	2.0	No
PTS820 J20K SMTR LFS	250 ± 50	100,000	2.0	No
PTS820 J20MP SMTR LFS	160 ± 50	200,000	2.0	Yes
PTS820 J20KP SMTR LFS	250 ± 50	100,000	2.0	Yes
PTS820 J15M SMTR LFS	160 ± 50	200,000	1.5	No
PTS820 J15K SMTR LFS	250 ± 50	100,000	1.5	No
PTS820 J15MP SMTR LFS	160 ± 50	200,000	1.5	Yes
PTS820 J15KP SMTR LFS	250 ± 50	100,000	1.5	Yes

Packaging

Switches in reels of 2,500 pieces for 1.5 and 2.0 mm height
Switches in reels of 2,300 pieces for 2.5 mm height
Dimensions of reels according to EIA 481B
External diameter 330 mm

Electrical

MAXIMUM VOLTAGE:	12 VDC
MAXIMUM CURRENT DC:	50 mA
DIELECTRIC STRENGTH:	100 VA C (1mn)
CONTACT RESISTANCE:	≤ 100 mΩ
INSULATION RESISTANCE:	≥ 100 MΩ
BOUNCE TIME:	≤ 10 ms

Environmental

OPERATING TEMPERATURE: -40˚C to 85˚C

Process

SOLDERING: This component is suited to the following methods:
Infrared Reflow Soldering in accordance with IEC61760-1

NOTE: Specifications listed above are for switches with standard options.
For information on specific and custom switches, consult Customer Service Center.

How To Order

Our easy build-a-switch concept allows you to mix and match options to create the switch you need. To order, select desired option from each category and place it in the appropriate box.

For any part number different from those listed above, please consult your local representative.

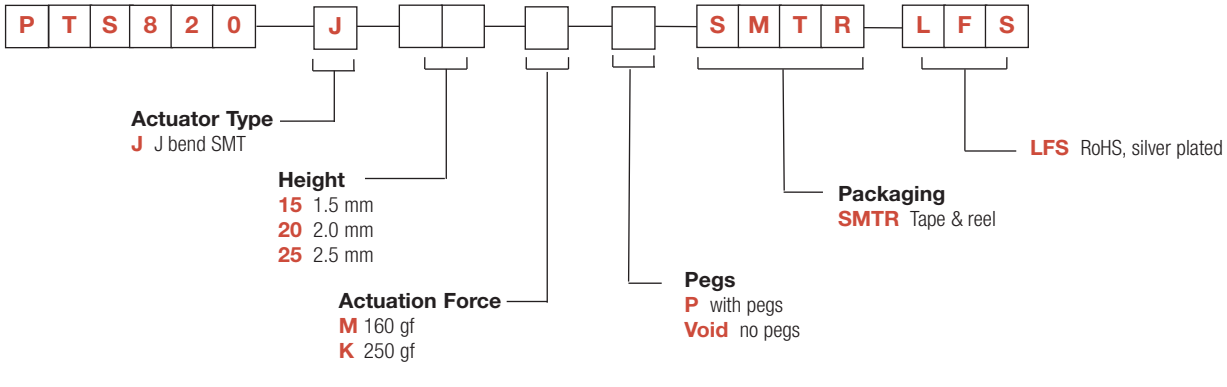

PTS 820 Series
Microminiature SMT Top Actuated

2.5 & 2.0 mm height (H) - version shown here with pegs

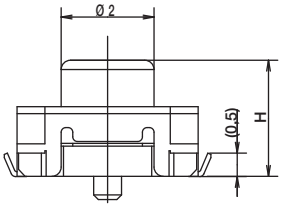

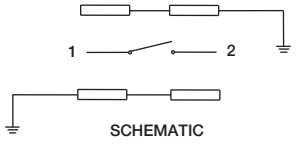

SCHEMATIC

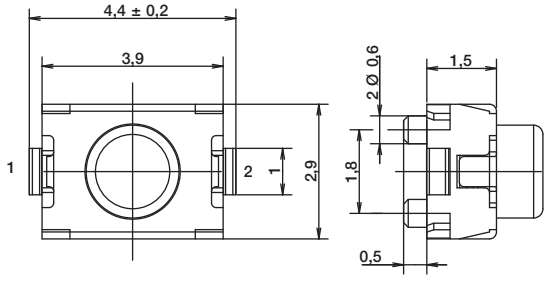

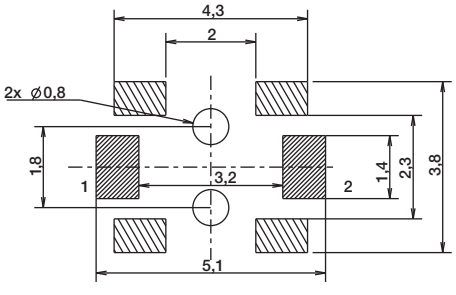

RECOMMENDED PCB LAYOUT

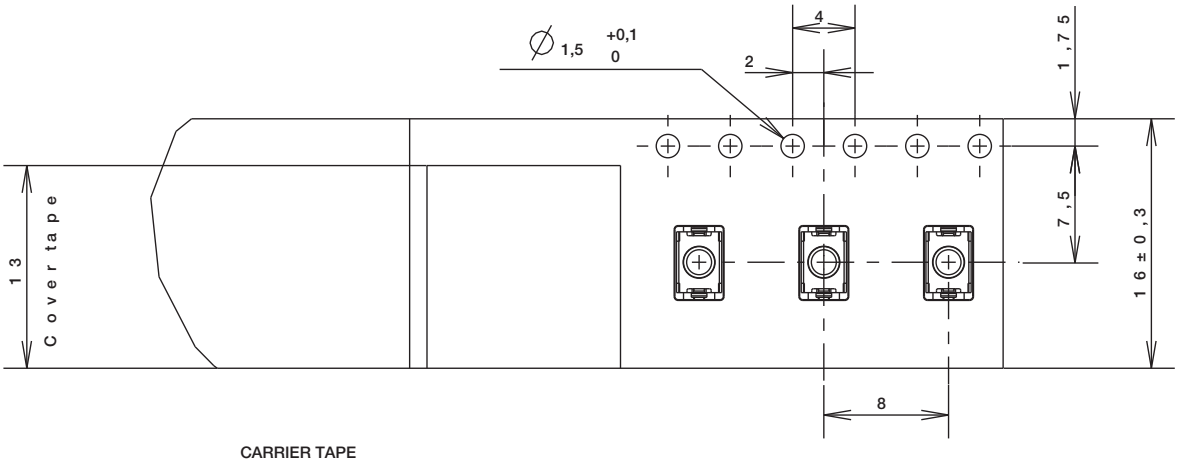

CARRIER TAPE

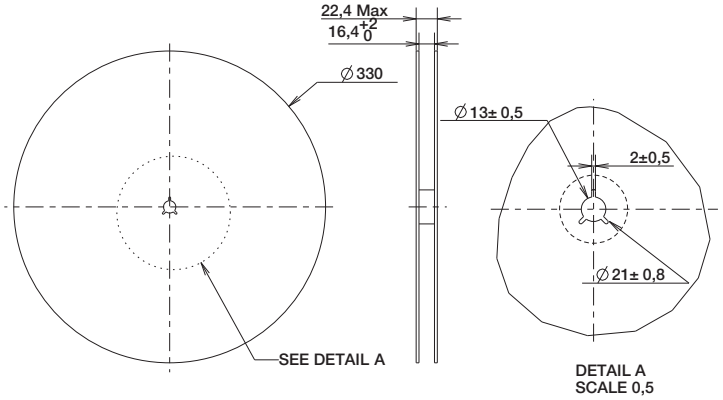

DETAIL A
SCALE 0,5

REEL

1.5 mm height (H) - version shown here with pegs

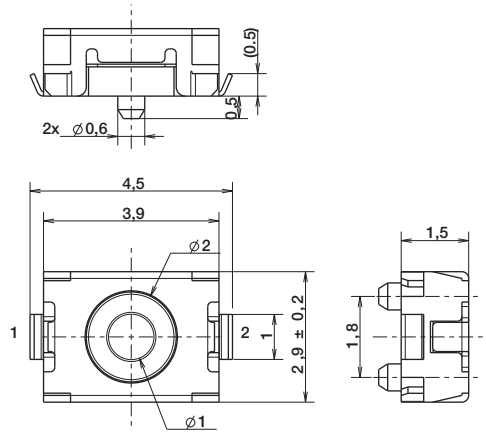

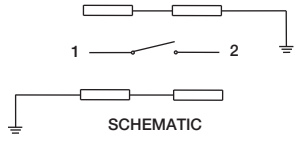

SCHEMATIC

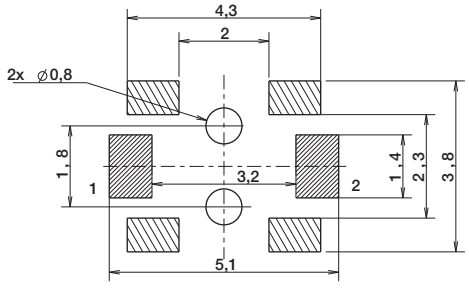

RECOMMENDED PCB LAYOUT

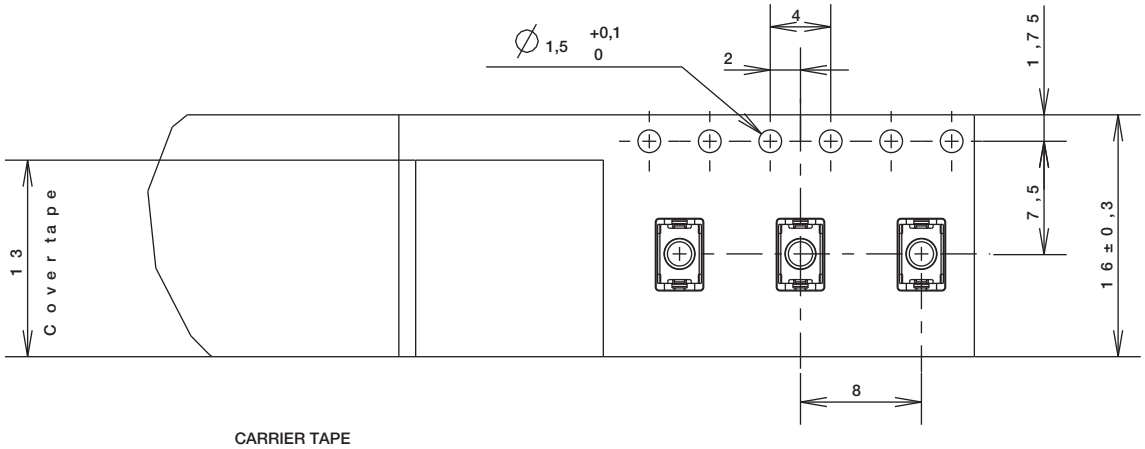

CARRIER TAPE

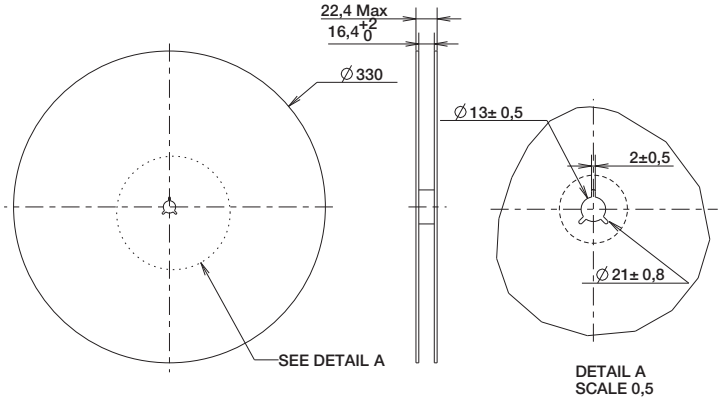

DETAIL A
SCALE 0,5

REEL

PTS 830 Series
Microminiature SMT Top Actuated

Features/Benefits

- ***3.5 x 2.6 mm footprint***
- ***High number of cycles***
- ***Optional ground pin***

Typical Applications

- ***Wearable electronics***
- ***Nomad devices***
- ***Remote controls***
- ***Keyless entry system***

Specifications

FUNCTION: momentary action
CONTACT ARRANGEMENT: 1 make contact = SPST N.O.
TERMINALS: G type for SMT
TRAVEL: 0.15 mm + 0.1 mm

	Operating Force (gf)	Life Cycles	Ground Pin
PTS830 GM140 SMTR LFS	160 ± 50	500,000	No
PTS830 GG140 SMTR LFS	450 ± 80	200,000	No
PTS830 GM140G SMTR LFS	160 ± 50	500,000	Yes
PTS830 GG140G SMTR LFS	450 ± 80	200,000	Yes

Packaging

Switches in reels of 9,500 pieces
Dimensions of reels according to EIA 481B
External diameter 330 mm

Electrical

MAXIMUM VOLTAGE:	12 VDC
MAXIMUM CURRENT DC:	50 mA
DIELECTRIC STRENGTH:	100 VA C (1mn)
CONTACT RESISTANCE:	≤ 100 mΩ
INSULATION RESISTANCE:	≥ 100 MΩ
BOUNCE TIME:	≤ 10 ms

Environmental

OPERATING TEMPERATURE: -40˚C to 85˚C

Process

SOLDERING: This component is suited to the following methods:
Infrared Reflow Soldering in accordance with IEC61760-1

NOTE: Specifications listed above are for switches with standard options.
For information on specific and custom switches, consult Customer Service Center.

How To Order

Our easy build-a-switch concept allows you to mix and match options to create the switch you need. To order, select desired option from each category and place it in the appropriate box.

For any part number different from those listed above, please consult your local representative.

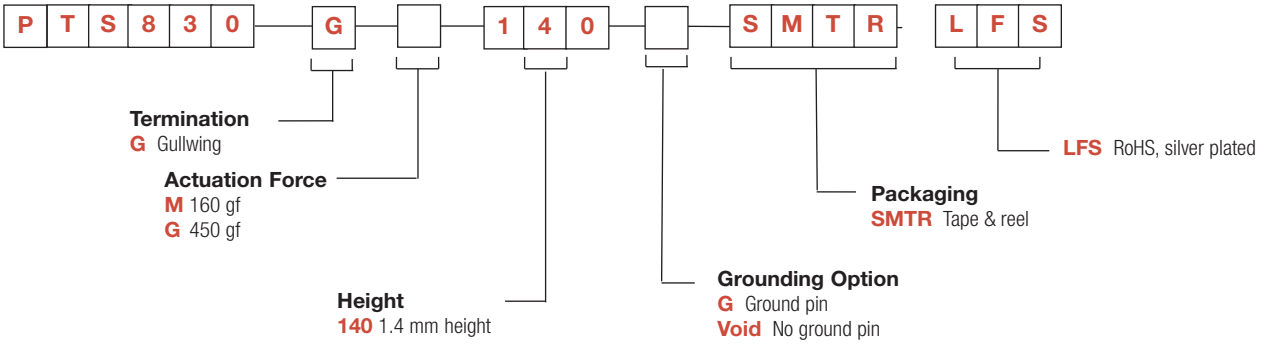

PTS830 GX 140 SMTR LFS

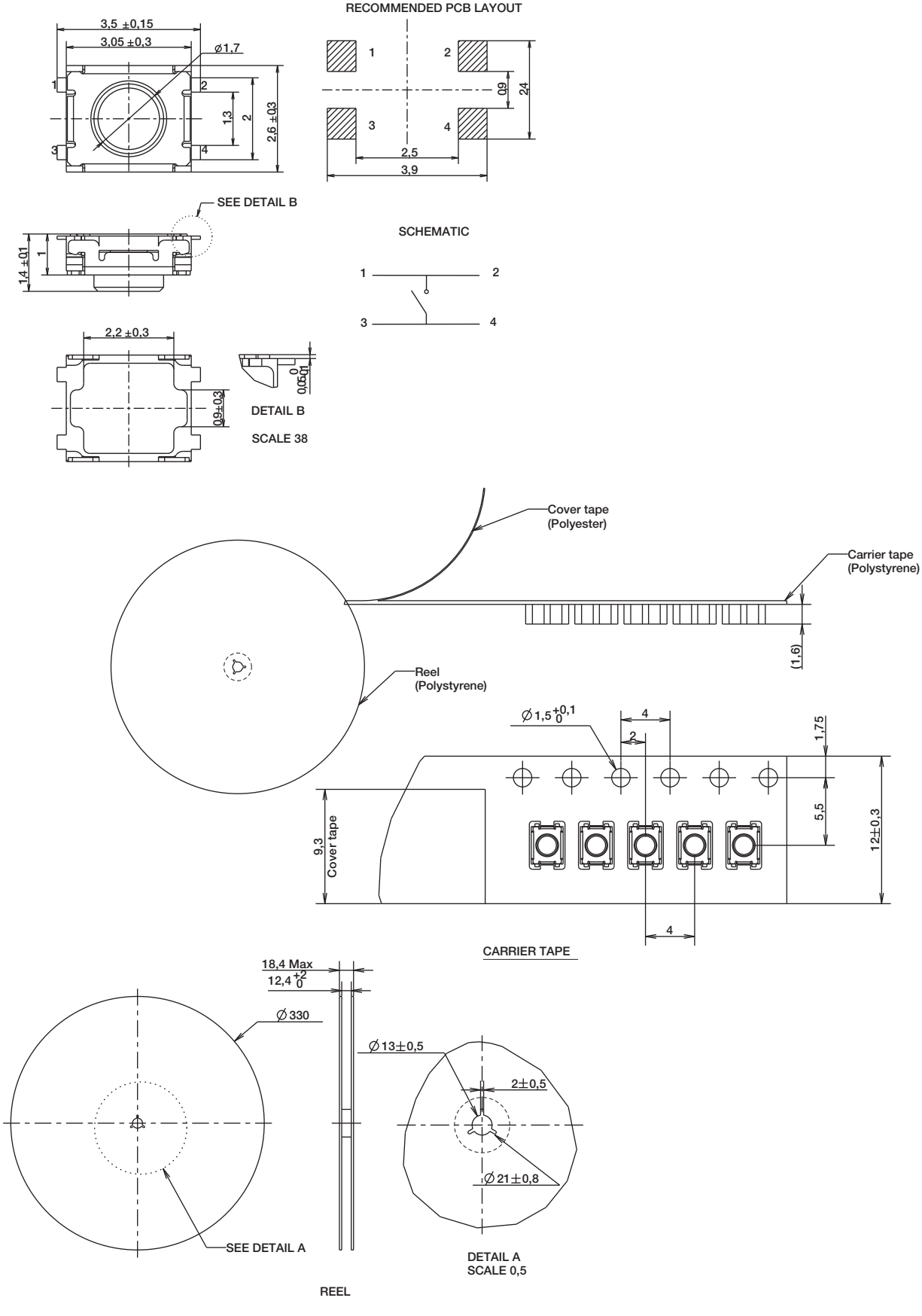

PTS 830 Series
Microminiature SMT Top Actuated

PTS830 GX 140 G SMTR LFS

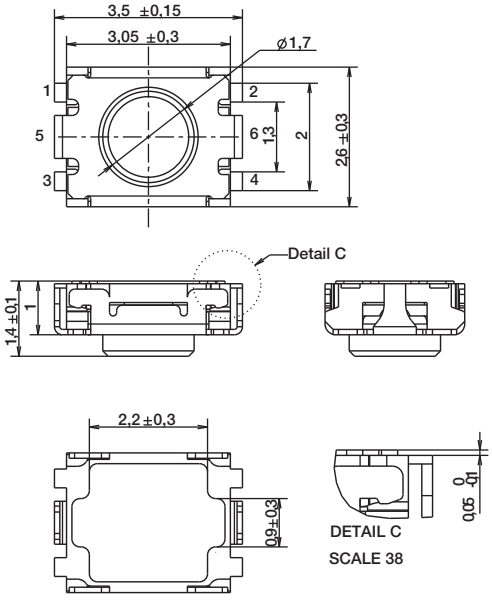

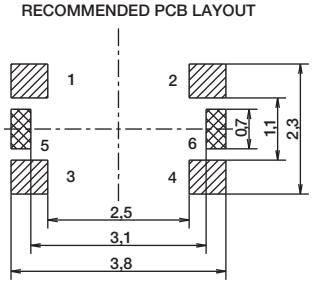

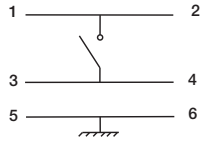

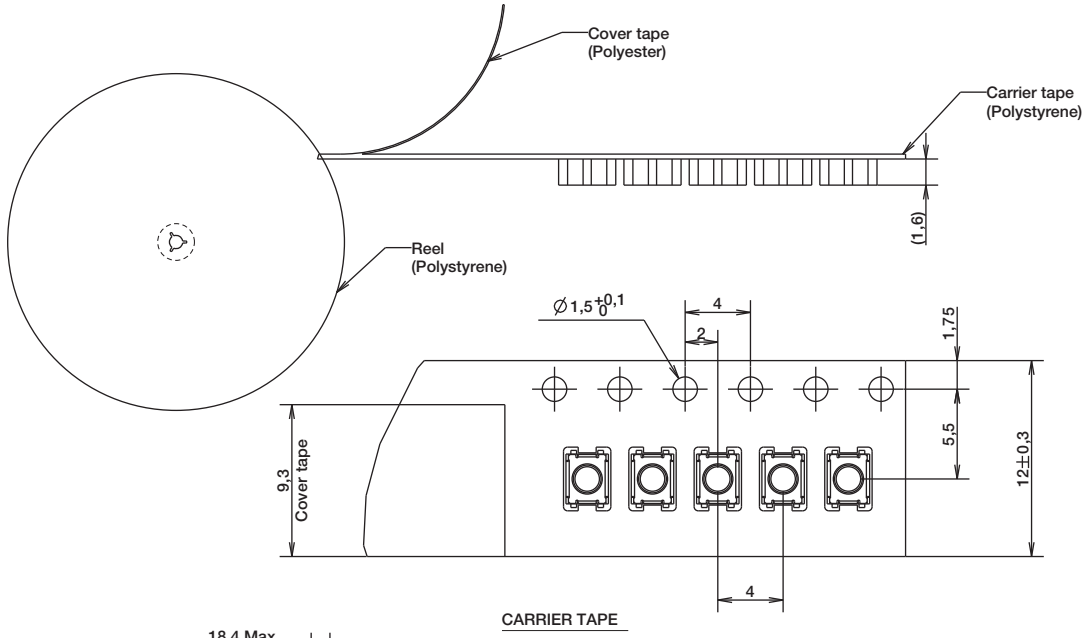

CARRIER TAPE

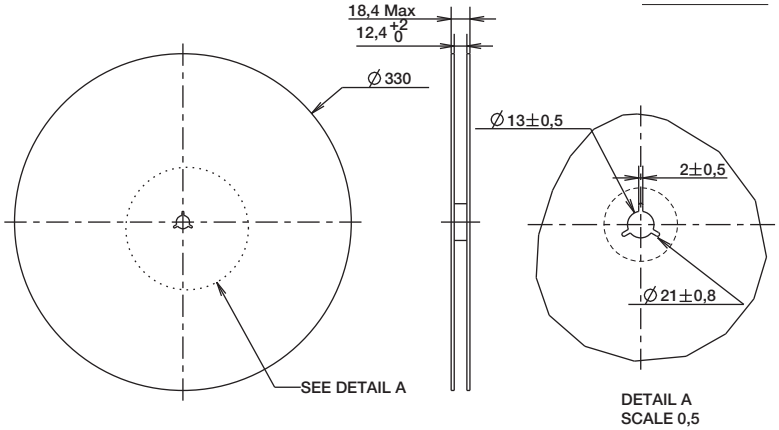

DETAIL A
SCALE 0,5

REEL

Dimensions are shown: mm
Specifications and dimensions subject to change

PTS 840 Series
Microminiature SMT Side Actuated

Features/Benefits

- *3.5 x 3.55 mm footprint*
- *Front PIP leads option for strong shear resistance*
- *ESD pin option*
- *Reduced footprint*

Typical Applications

- *Nomad devices*
- *Remote controls*
- *Personal health diagnostics*
- *Consumer electronics*

Specifications

FUNCTION: momentary action
CONTACT ARRANGEMENT: 1 make contact = SPST N.O.
TERMINALS: G and front PIP types for SMT
TRAVEL: 0.2mm + 0.2mm / -0.1 mm
LIFE: 100,000 cycles

Type	Operating Force (gf)	SMT Leads	Pegs
Without ground pin			
PTS840 GM SMTR LFS	160 -40/+70	G leads	No
PTS840 GK SMTR LFS	220 -70/+80	G leads	No
PTS840 PM SMTR LFS	160 -40/+70	P leads	No
PTS840 PK SMTR LFS	220 -70/+80	P leads	No
PTS840 GMP SMTR LFS	160 -40/+70	G leads	Yes
PTS840 GKP SMTR LFS	220 -70/+80	G leads	Yes
With ground pin			
PTS840 ESDGM SMTR LFS	160 -40/+70	G leads	No
PTS840 ESDGK SMTR LFS	220 -70/+80	G leads	No
PTS840 ESDPM SMTR LFS	160 -40/+70	P leads	No
PTS840 ESDPK SMTR LFS	220 -70/+80	P leads	No
PTS840 ESDGMP SMTR LFS	160 -40/+70	G leads	Yes
PTS840 ESDGKP SMTR LFS	220 -70/+80	G leads	Yes

Electrical

MAXIMUM VOLTAGE:	12 VDC
MAXIMUM CURRENT DC:	50 mA
DIELECTRIC STRENGTH:	250 VA C (1mn)
CONTACT RESISTANCE:	≤ 500 mΩ
INSULATION RESISTANCE:	≥ 100 MΩ
BOUNCE TIME:	≤ 10 ms

Environmental

OPERATING TEMPERATURE: -40˚C to 85˚C

Process

SOLDERING: This component is suited to the following methods:
Infrared Reflow Soldering in accordance with IEC61760-1

Packaging

In reels of 3,500 pieces
Dimensions of reels according to EIA 481B
External diameter 330 mm

NOTE: Specifications listed above are for switches with standard options.
For information on specific and custom switches, consult Customer Service Center.

How To Order

Our easy build-a-switch concept allows you to mix and match options to create the switch you need. To order, select desired option from each category and place it in the appropriate box.

For any part number different from those listed above, please consult your local representative.

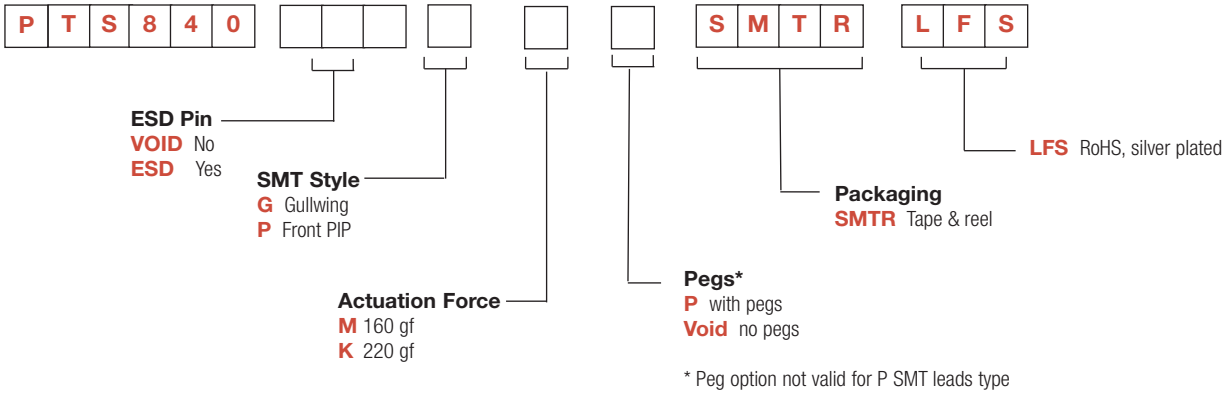

Design Recommendations

- "P" leads are recommended for applications where shear resistance is of importance
- When a precise alignment between application button and the switch is requested, version with pegs are the right choice to limit the possible floating of the switch during solderability.

Dimensions are shown: mm
Specifications and dimensions subject to change

Standard G SMT Leads with ESD and Peg options

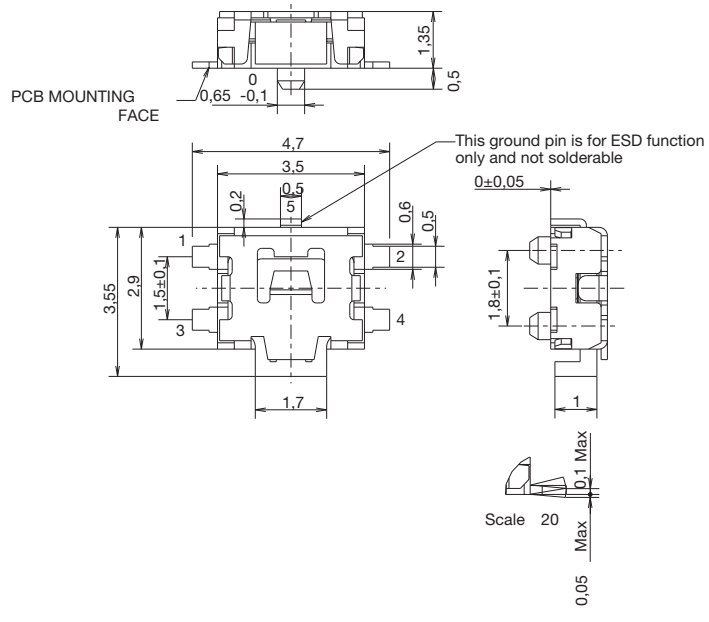

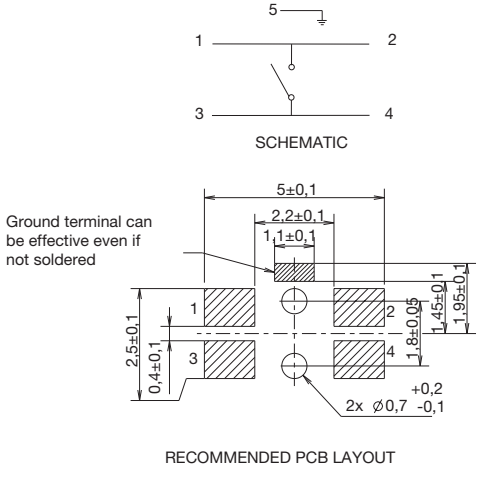

P SMT Leads with ESD option

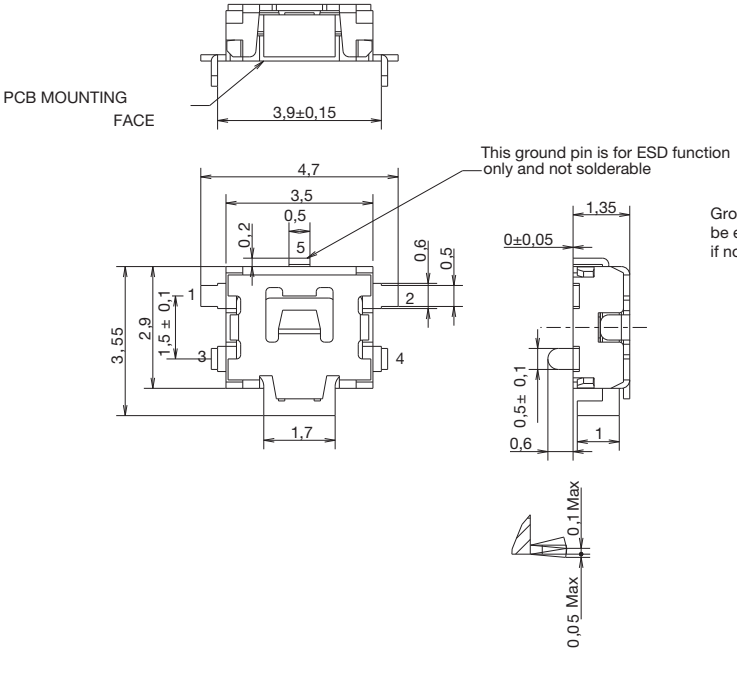

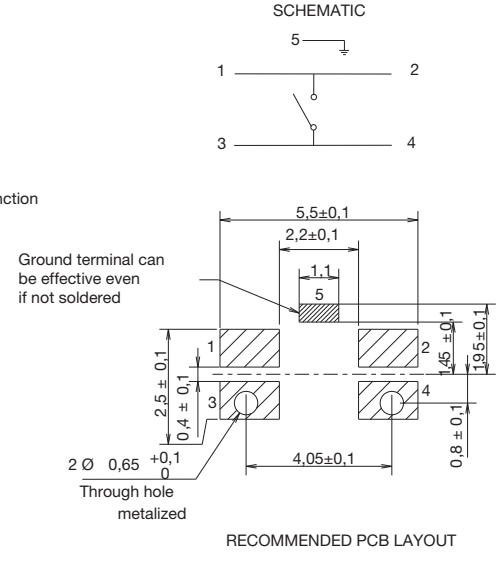

PTS 840 Series
Microminiature SMT Side Actuated

TAPE & REEL

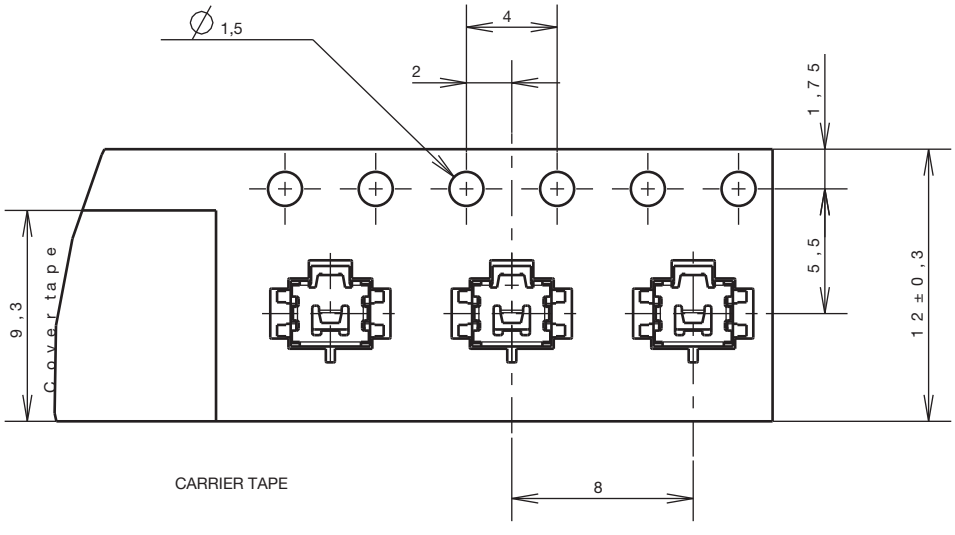

CARRIER TAPE

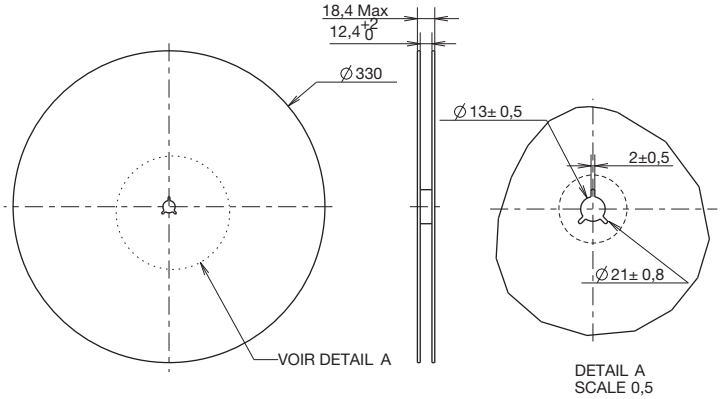

DETAIL A
SCALE 0,5

REEL

KSR Series
Subminiature Tact Switch for SMT

Features/Benefits

- ***4 actuation forces***
- ***G terminations***
- ***N.O. and N.C.***
- ***Detect type available***
- ***Rubber actuator***
- ***IP50 sealed***
- ***RoHS compliant and compatible***

Typical Applications

- ***Automotive***
- ***Medical equipment***
- ***Industrial electronics***
- ***Smart meters***

Specification

FUNCTION: momentary action
CONTACT ARRANGEMENT: Normally Open
TERMINALS: Gullwing type for SMT

Mechanical

Type	Operating force Newtons (grams)	Operating life (operations)	Travel (mm)
KSR211G LFS / KSR213G LFG	1,5 < 1,85 (185) < 2,2	100,000	0,25 ± 0,15
KSR221G LFS / KSR223G LFG	1,9 < 2,25 (225) < 2,6	100,000	0,3 ± 0,15
KSR231G LFS /KSR233G LFG	2,25 < 3,00 (300)< 3,75	100,000	0,35 ± 0,15
KSR251G LFS / KSR253G LFG	3,4 < 4,50 (450) < 5,6	100,000	0,5 ± 0,15
KSR221G NC LFS	1,5 < 2,25 (225) < 3	30,000	0,3 ± 0,15
KSR223G NC LFG	1,5 < 2 (200) < 2,5	30,000	0,3 ± 0,15

Overload: 20 Newtons
Detect switch versions are available. Please see Detect chapter KSR2D/M series.

Packaging

Switches are delivered on continuous tape, in reels of 2,500 pieces.

Electrical

	Silver	Gold
MAXIMUM POWER:	1 VA	0.2 VA
MAXIMUM VOLTAGE:	32 VDC	32 VDC
MINIMUM VOLTAGE:	20 mV	20 mV
MAXIMUM CURRENT DC:	50 mA	10 mA
MINIMUM CURRENT DC:	1 mA	1 mA

CONTACT RESISTANCE: ≤ 100 mΩ
INSULATION RESISTANCE: (100 V): 1G Ω (between terminals)
BOUNCE TIME: 1 ms max.

Environmental

	Silver	Gold
OPERATING TEMPERATURE:	-40˚C to 85˚C	-40˚C to 125˚C
STORAGE TEMPERATURE:	-55˚C to 85˚C	-55˚C to 125˚C

Process

SOLDERING: Compatible with lead free reflow soldering process.

NOTE: Specifications listed above are for switches with standard options.
For information on specific and custom switches, consult Customer Service Center.

How To Order

Our easy build-a-switch concept allows you to mix and match options to create the switch you need. To order, select desired option from each category and place it in the appropriate box.

However, please note that all the combinations of these options are not feasible.
For any part number different from those listed above, please consult your local representative.

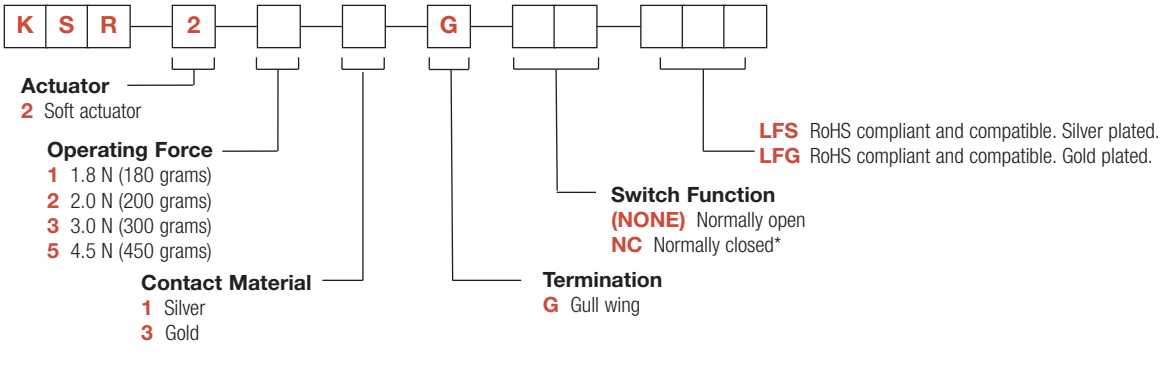

*Available on KSR223G only.

Dimensions are shown: mm
Specifications and dimensions subject to change

KSR

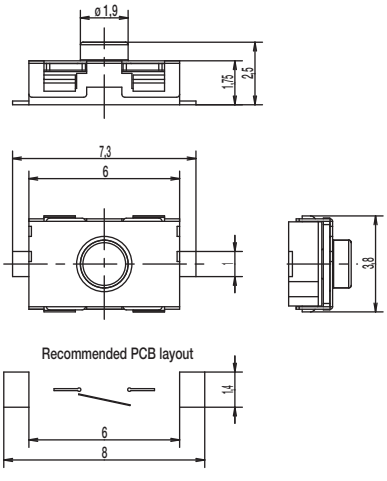

TAPE & REEL

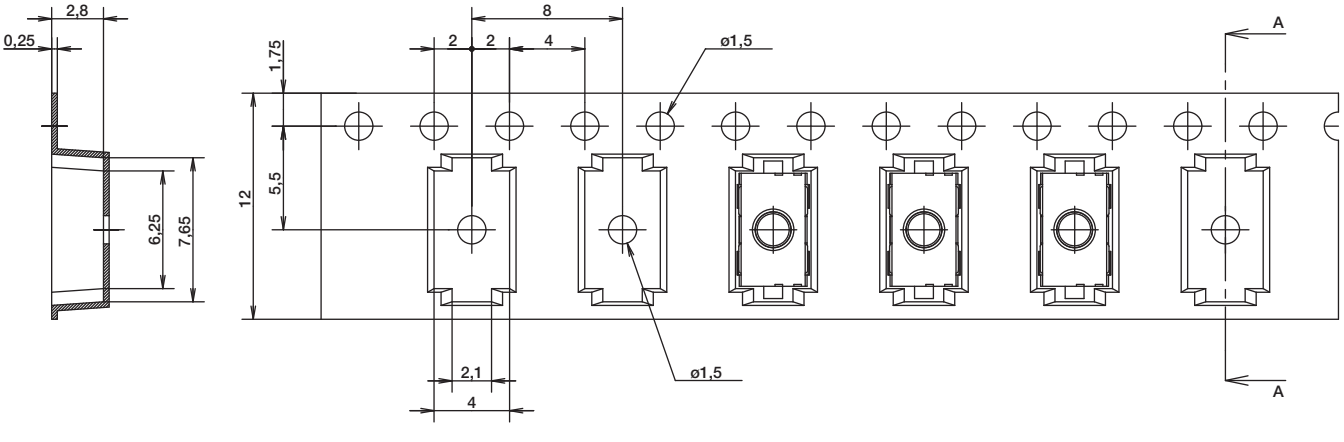

DIRECTION OF FEED

First Angle Projection

Dimensions are shown: mm
Specifications and dimensions subject to change

KSR Long Life-200,000 cycles-Gold and Silver Series Subminiature Tact Switch for SMT

Features/Benefits

- ***4 actuation forces***
- ***G terminations***
- ***N.O.***
- ***Detect type available***
- ***Rubber actuator***
- ***IP50 sealed***
- ***RoHS compliant and compatible***

Typical Applications

- ***Automotive***
- ***Medical equipment***
- ***Industrial electronics***

Specification

FUNCTION: momentary action
CONTACT ARRANGEMENT: Normally Open
TERMINALS: Gullwing type for SMT

Mechanical

Type	Operating force(Fa) Newtons (grams)	Operating life (operations)	Travel (mm)
Silver versions			
KSR212G LFS	1,5 < 1,85 (185) < 2,2	200,000	0,25 ± 0,15
KSR222G LFS	1,9 < 2,25 (225) < 2,6	200,000	0,3 ± 0,15
KSR232G LFS	2,25 < 3,00 (300)< 3,75	200,000	0,35 ± 0,15
KSR252G LFS	3,4 < 4,50 (450) < 5,6	200,000	0,5 ± 0,15
Gold versions			
KSR214G LFS	1,5 < 1,85 (185) < 2,2	200,000	0,25 ± 0,15
KSR224G LFS	1,9 < 2,25 (225) < 2,6	200,000	0,3 ± 0,15
KSR234G LFS	2,25 < 3,00 (300)< 3,75	200,000	0,35 ± 0,15
KSR254G LFS	3,4 < 4,50 (450) < 5,6	200,000	0,5 ± 0,15

OVERLOAD: 20 Newtons

Packaging

Switches are delivered on continuous tape, in reels of 2,500 pieces.

Electrical

	Silver	Gold
MAXIMUM POWER:	1 VA	0.2 VA
MAXIMUM VOLTAGE:	32 V dc	32 V dc
MINIMUM VOLTAGE:	20 m Vdc	20 m Vdc
MAXIMUM CURRENT DC:	50 mA	10 mA
MINIMUM CURRENT DC:	1 mA	1 mA

CONTACT RESISTANCE: ≤ 100 m Ω
INSULATION RESISTANCE (100 V): 1 G Ω (between terminals)
BOUNCE TIME: 1 ms max

Environmental

	Silver	Gold
OPERATING TEMPERATURE:	-40˚C to 85˚C	-40˚C to 125˚C
STORAGE TEMPERATURE:	-55˚C to 85˚C	-55˚C to 125˚C

Process

SOLDERING: Compatible with lead free reflow soldering process.

NOTE: Specifications listed above are for switches with standard options.
For information on specific and custom switches, consult Customer Service Center.

How To Order

Our easy build-a-switch concept allows you to mix and match options to create the switch you need. To order, select desired option from each category and place it in the appropriate box.

However, please note that all the combinations of these options are not feasible.
For any part number different from those listed above, please consult your local representative.

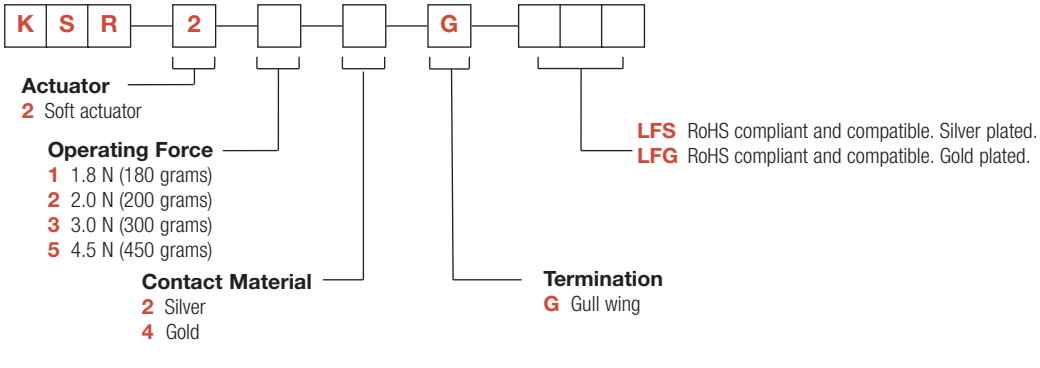

Dimensions are shown: mm
Specifications and dimensions subject to change

KSR Long Life-200,000 cycles-Gold and Silver Series Subminiature Tact Switch for SMT

KSR

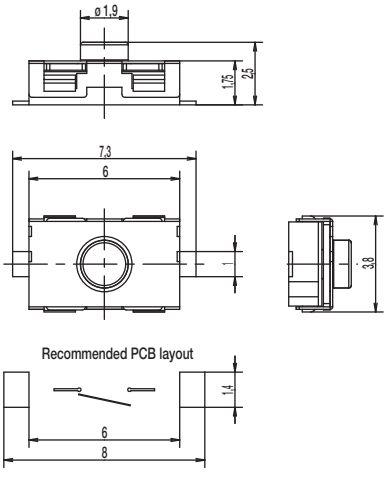

TAPE & REEL

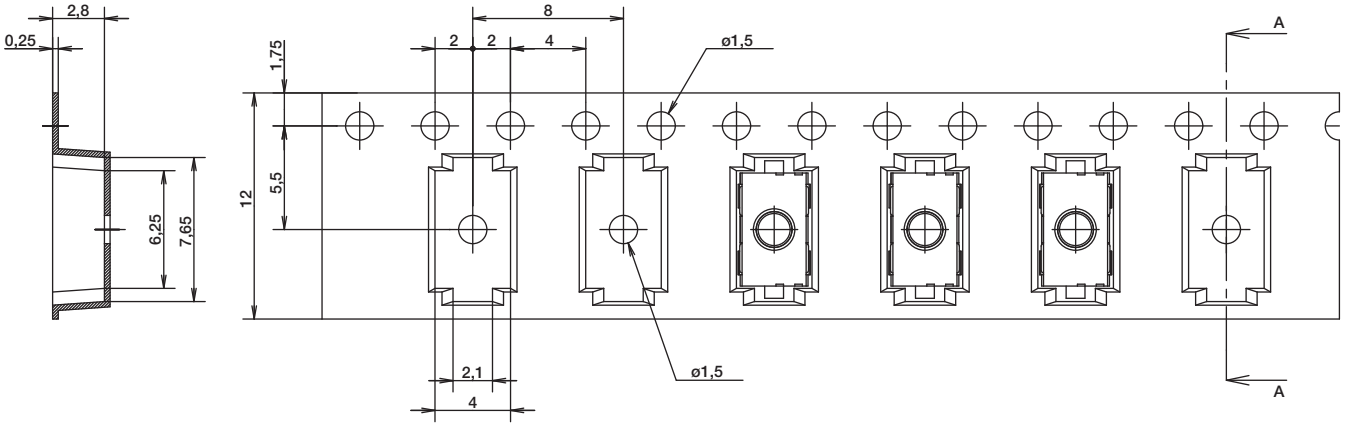

DIRECTION OF FEED

First Angle Projection

Dimensions are shown: mm
Specifications and dimensions subject to change

Features/Benefits

- *Low profile of 1.7 mm*
- *Excellent tactile feel*
- *High shear force*
- *Range of actuation forces*
- *Large flat top*
- *RoHS compliant and compatible*

Typical Applications

- *Cellular phone*
- *Industrial electronics*
- *Health diagnostic electronics*

Specification

FUNCTION: momentary action
CONTACT ARRANGEMENT: N.O.
TERMINALS: Gullwing
IP40 sealed

Mechanical

OVERLOAD: 20N
TACTILE FEELING: 2 and 4N: 25% min.
2.5N: 30% min.

Type	Operating force Newtons (grams)	Operating life (operations)	Travel (mm)
KSS221G	2.0 (200) ± 0.5	100,000	0,3 ± 0,15
KSS231G	2.5 (250) ± 0.5	100,000	0,3 ± 0,10
KSS241G	4.0 (400) ± 1.0	100,000	0,3 ± 0,15

NOTE: Specifications listed above are for switches with standard options.
For information on specific and custom switches, consult Customer Service Center.

Electrical

	Silver	Gold
MAXIMUM POWER:	1 VA	0.2 VA
MAXIMUM VOLTAGE:	32 VDC	32 VDC
MAXIMUM CURRENT:	50 mA	10 mA
MINIMUM CURRENT:	1 mA	1 mA

DIELECTRIC STRENGTH: ≥ 250 VDC
CONTACT RESISTANCE: < 100 mΩ
INSULATION RESISTANCE (100 VDC): ≥ 10^9 Ω
BOUNCE TIME: < 3 ms

Environmental

	Silver	Gold
OPERATING TEMPERATURE:	-40°C to 85°C	-40°C to 125°C
STORAGE TEMPERATURE:	-55°C to 85°C	-55°C to 125°C

Process

Infared reflow soldering in accordance with IEC 61760-1

Packaging

Tape and reels in reels of 3,000 pieces.
External diameter 330mm ± 2mm.

How To Order

Our easy build-a-switch concept allows you to mix and match options to create the switch you need. To order, select desired option from each category and place it in the appropriate box.

However, please note that all the combinations of these options are not feasible.
For any part number different from those listed above, please consult your local representative.

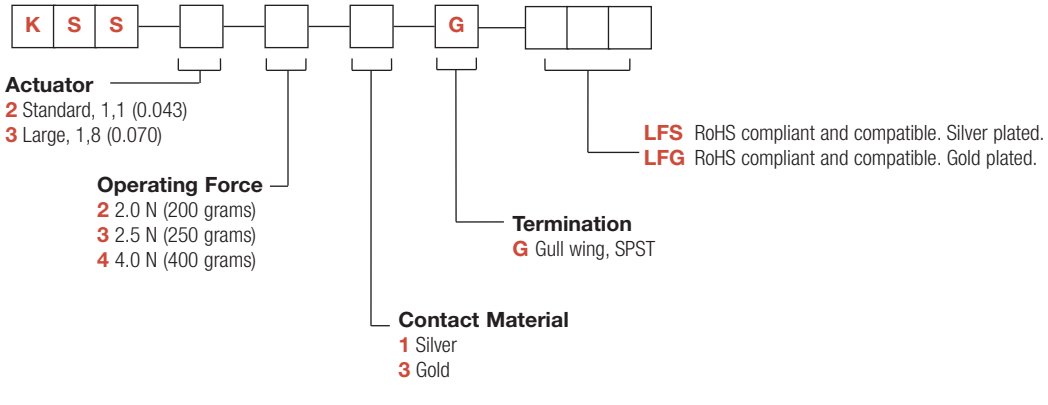

KSS Series
Subminiature SMT Side Actuated

KSS

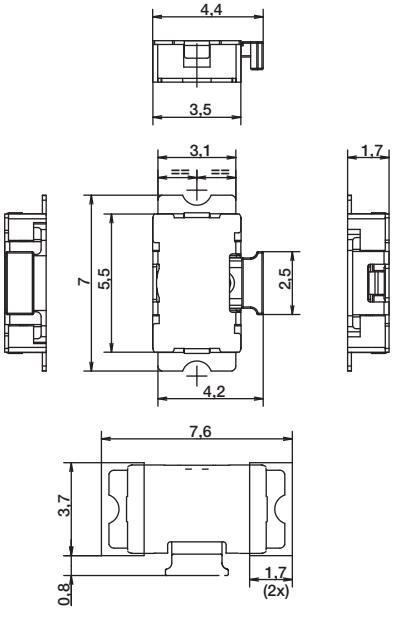

ACTUATOR

2 STANDARD, 1,1 (0.043)

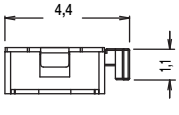

3 LARGE, 1,8 (0.070)

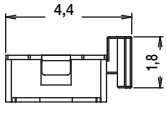

TAPE & REEL

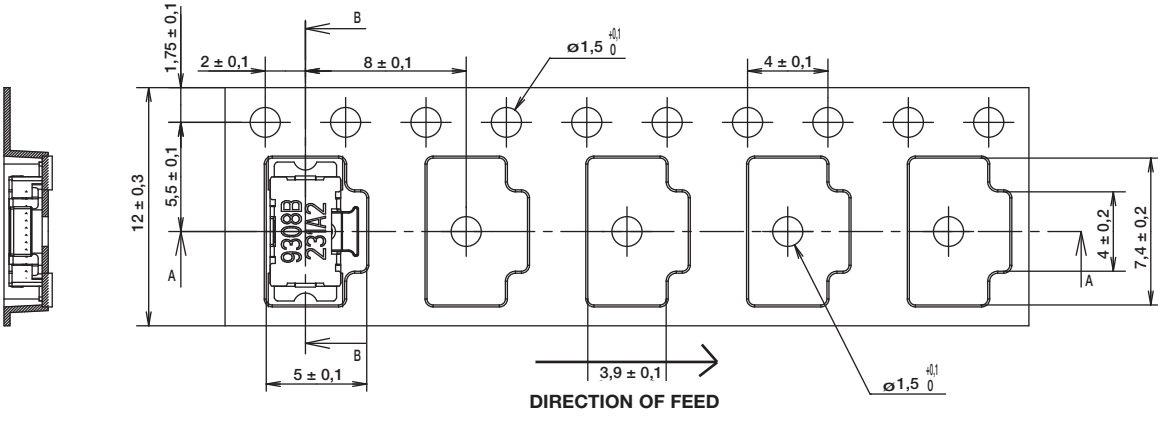

First Angle Projection

Dimensions are shown: mm
Specifications and dimensions subject to change

KSC Series
Sealed Tact Switch for SMT

Features/Benefits

- ***Positive tactile feeling***
- ***J or G terminations***
- ***Various heights***
- ***IP67***

Typical Applications

- ***Automotive***
- ***Cellular phones***
- ***Industrial electronics***
- ***Network infrastructure and IT***
- ***Elevator***

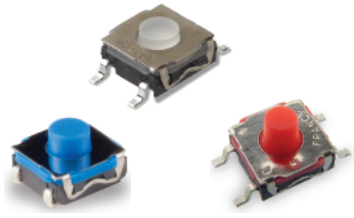

Specification

FUNCTION: Momentary action
CONTACT ARRANGEMENT: 1 make contact = SPST, N.O.
TERMINALS: J bend & Gullwing type for SMT
SEALING: IP67 except KSC5 (IP50)

Liability Limitation

This datasheet does not provide enough information for applications that require a certain level of quality or safety such as automotive, medical systems, or safety equipement. Please contact customer service for the contractual specification package.

Environmental

	Silver	Gold
OPERATING TEMPERATURE:	-40˚C to 85˚C	-40˚C to 125˚C
STORAGE TEMPERATURE:	-55˚C to 85˚C	-55˚C to 125˚C

Process

SOLDERING: Depending on the application, this component is suited to the following methods:
– Terminals being silver or gold plated over a nickel barrier, the use of slightly activated flux is suitable.
– Soldering on double wave machine for vertical versions: soldering time ≤ 5 sec.
– Cleaning according to typical washing processes.
– Infrared Reflow Soldering in accordance with IEC 61760-1.

Electrical

	Silver	Gold
MAXIMUM POWER:	1 VA	0.2 VA
MAXIMUM VOLTAGE:	32 VDC	32 VDC
MINIMUM VOLTAGE:	20 mV	20 mV
MAXIMUM CURRENT:	50 mA	10 mA
MINIMUM CURRENT:	1 mA*	0.1 mA

DIELECTRIC STRENGTH (50 Hz, 1 min.): ≥ 250 Vrms
CONTACT RESISTANCE: ≤ 100mΩ
INSULATION RESISTANCE (100 V): ≥ 10M Ω
BOUNCE TIME: ≤ 1 ms
* Ultra low current with 10 µA - 1 VDC version are available upon request for KSC2 and KSC4

Packaging

Tape and Reel (see series for quantity information)

NOTE: Specifications listed above are for switches with standard options.

KSC Product Range

KSC1	KSC2	KSC3	KSC4	KSC5	KSC6	KSC7	KSC8	KSC9	KSC10
Without actuator	Soft actuator	Hard actuator	Soft actuator	Hard actuator	Hard actuator	Soft actuator	Hard actuator	Hard actuator	Soft actuator
H = 2.5 mm	H = 3.5 mm	H = 3.5 mm	H = 5.2 mm	H = 5.6 mm	H = 7.7 mm	H = 4.3 mm	H = 4.9 mm	H = 7.7 mm compatible with button	H = 4.9 mm
IP67	IP67	IP67	IP67	IP50	IP67	IP67	IP67	IP67	IP67

Note: KSC Series is subject to variants. Please contact customer service for other options.

KSC Series
Sealed Tact Switch for SMT

J J BEND

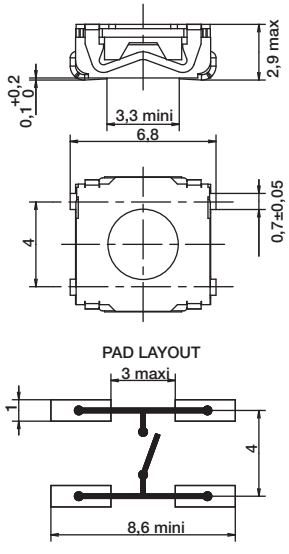

G GULLWING

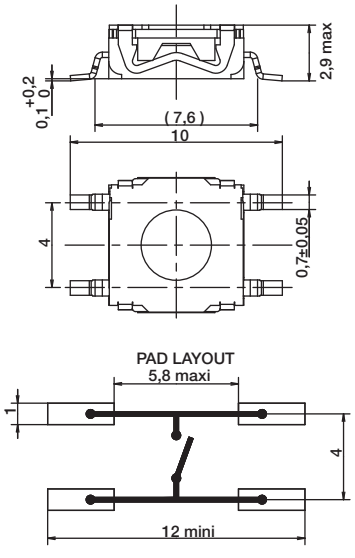

12 MM

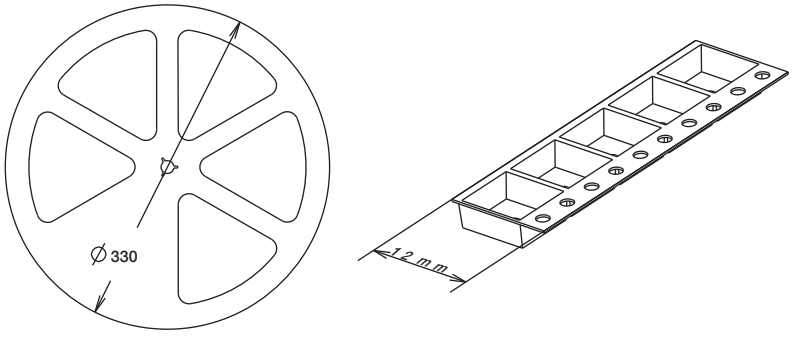

16 MM

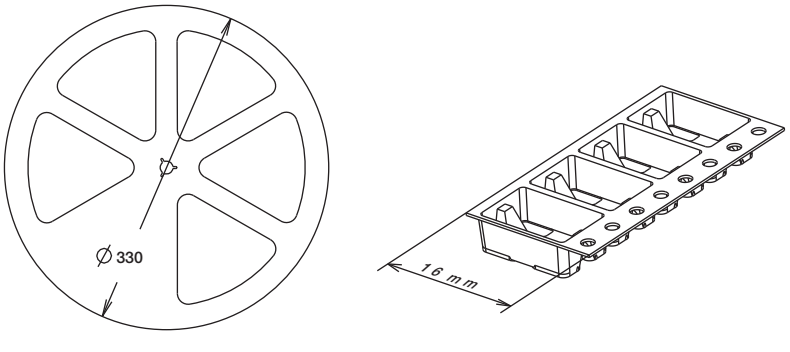

12 mm	Pieces	16 mm	Pieces
KSC1J	2,000	KSC1G	2,000
KSC2J	2,000	KSC2G	2,000
KSC3J	2,000	KSC3G	2,000
		KSC4J & G	1,000
		KSC5J & G	1,000
		KSC6J & G	750
		KSC7J & G	1,000
		KSC8J & G	1,000
		KSC9J & G	750
		KSC10J & G	1,000

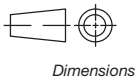

Dimensions are shown: mm
Specifications and dimensions subject to change

KSC1 without actuator 2,5 mm high

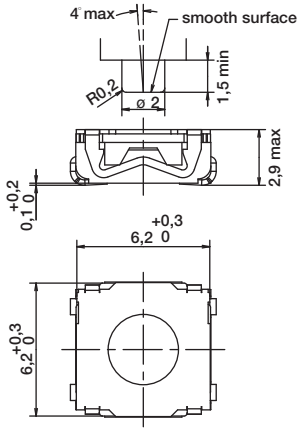

Type	Operating force FA (Newtons)	Operating life (operations)	Travel (mm)
KSC121	1.8 ± 0.65	200,000	0.3 ± 0.15
KSC141	3 ± 0.75	200,000	0.3 ± 0.15
KSC151	5.5 ± 1.4	100,000	0.35 ± 0.15

Packaging

Switches delivered on continuous tape & reels of 2,000 pieces
Dimensions according to EIA RS-481/ IEC 60286-3 standard
External diameter 330 ± 2 mm

How To Order

Our easy build-a-switch concept allows you to mix and match options to create the switch you need. To order, select desired option from each category and place it in the appropriate box.

However, please note that all the combinations of these options are not feasible.
For any part number different from those listed above, please consult your local representative.

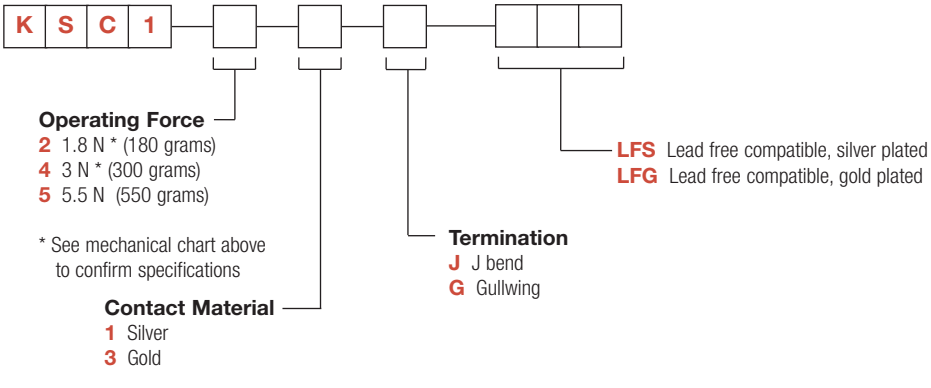

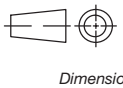
First Angle Projection

Dimensions are shown: mm
Specifications and dimensions subject to change

KSC2 Series
Sealed Tact Switch for SMT

KSC2 soft actuator 3,5 mm high

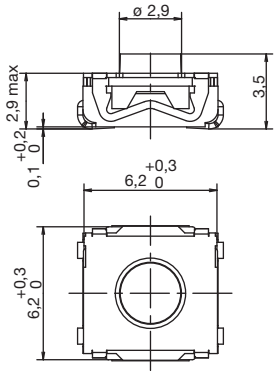

Type	Operating force FA (Newtons)	Operating life (operations)	Travel (mm)
KSC201	1.6 ± 0.6	5,000,000	0.3 ± 0.2
KSC221	2 ± 0.5	500,000	0.35 + 0.3/- 0.1
KSC222	2 ± 0.5	1,000,000	0.35 ± 0.15
KSC241	3.5 ± 0.9	300,000	0.5 ± 0.2
KSC251	5.55 ± 1.45	300,000	0.5 ± 0.2
KSC231 SPD	3.5 ± 0.9	300,000	0.5 ± 0.2
KSC241 SPD	3.55 ± 0.9	300,000	0.5 ± 0.2
KSC251 SPD	6.2 ± 1.55	100,000	0.6 ± 0.2

Packaging

Switches delivered on continuous tape & reels of 2,000 pieces
Dimensions according to EIA RS-481/ IEC 60286-3 standard
External diameter 330 ± 2 mm

How To Order

Our easy build-a-switch concept allows you to mix and match options to create the switch you need. To order, select desired option from each category and place it in the appropriate box.

However, please note that all the combinations of these options are not feasible.
For any part number different from those listed above, please consult your local representative.

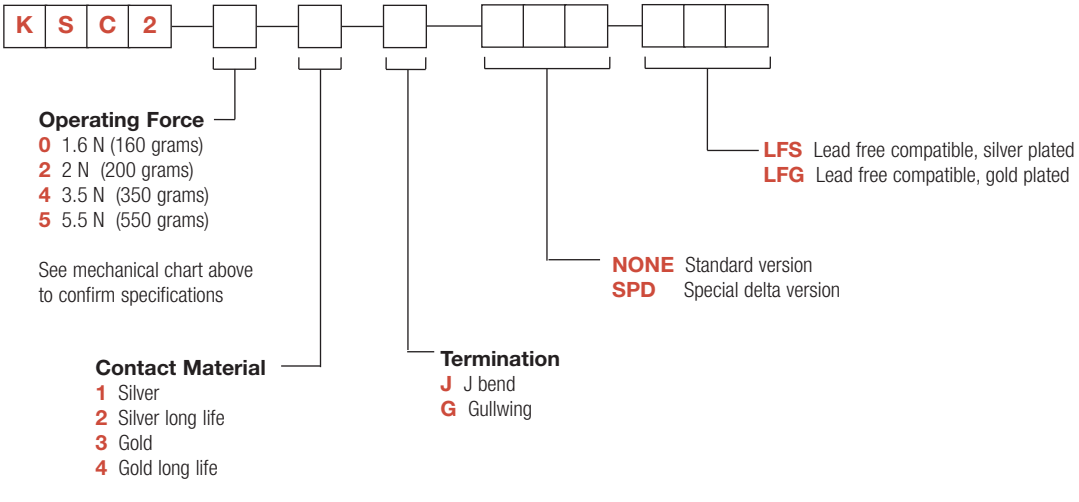

First Angle Projection

Dimensions are shown: mm
Specifications and dimensions subject to change

KSC3 hard actuator 3,5 mm high

Type	Operating force FA (Newtons)	Operating life (operations)	Travel (mm)
KSC321	2 ± 0.4	300,000	0.2 + 0.3/- 0
KSC341	3 ± 0.75	300,000	0.2 + 0.3/- 0
KSC351	5 ± 1	100,000	0.25 + 0.3/- 0

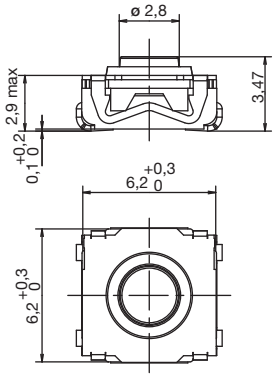

Packaging

Switches delivered on continuous tape & reels of 2,000 pieces
Dimensions according to EIA RS-481/ IEC 60286-3 standard
External diameter 330 ± 2 mm

How To Order

Our easy build-a-switch concept allows you to mix and match options to create the switch you need. To order, select desired option from each category and place it in the appropriate box.

However, please note that all the combinations of these options are not feasible.
For any part number different from those listed above, please consult your local representative.

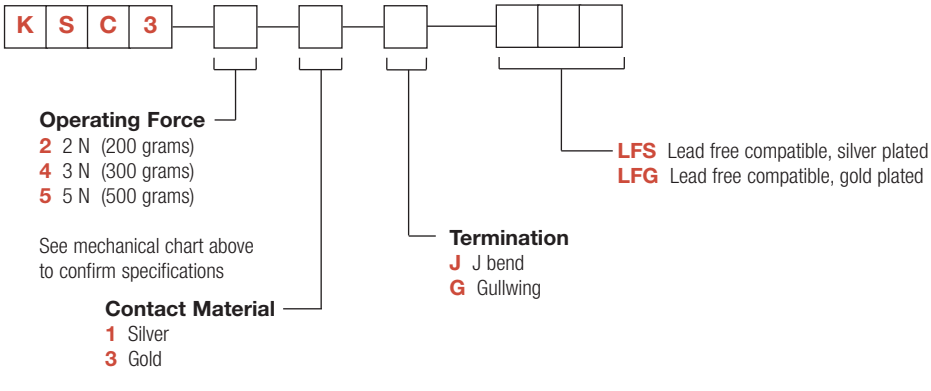

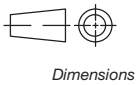

Dimensions are shown: mm
Specifications and dimensions subject to change

KSC4 Series
Sealed Tact Switch for SMT

KSC4 soft actuator 5,2 mm high

Type	Operating force FA (Newtons)	Operating life (operations)	Travel (mm)
KSC401 50SH	1.45 ± 0.55	5,000,000	0.5 ± 0.25
KSC411 70SH	1.4 ± 0.35	1,000,000	0.35 ± 0.20
KSC421 70SH	1.7 ± 0.45	300,000	0.5 ± 0.25
KSC422 70SH	1.7 ± 0.45	1,000,000	0.5 ± 0.25
KSC441 70SH	4 ± 1	300,000	0.75 ± 0.25
KSC442 70SH	4 ± 1	1,000,000	0.75 ± 0.25
KSC451 70SH	4.25 ± 0.75	300,000	0.8 ± 0.2
KSC441 SPD	3.5 ± 0.9	300,000	0.7 ± 0.2
KSC441 ST1	3.4 ± 1	300,000	0.7 ± 0.25
KSC441 ST2	3.4 ± 1	300,000	0.35 ± 0.20
KSC461 ST1	6.25 ± 1.75	100,000	1 ± 0.3
KSC461 ST2	6.25 ± 1.75	300,000	0.5 ± 0.2

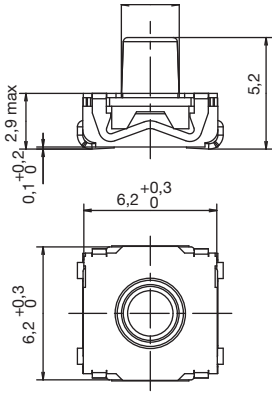

Packaging

Switches delivered on continuous tape & reels of 1,000 pieces
Dimensions according to EIA RS-481/ IEC 60286-3 standard
External diameter 330 ± 2 mm

How To Order

Our easy build-a-switch concept allows you to mix and match options to create the switch you need. To order, select desired option from each category and place it in the appropriate box.

However, please note that all the combinations of these options are not feasible.
For any part number different from those listed above, please consult your local representative.

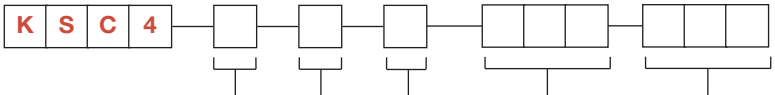

Operating Force
0 1.45 N (145 grams)
1 1.4N (140 grams)
2 1.7 N (170 grams)
4 4 N (400 grams)
5 4.25 N (425 grams)
6 6.25 N (625 grams)
See mechanical chart above to confirm specifications

Contact Material
1 Silver
2 Silver long life
3 Gold
4 Gold long life

Termination
J J bend
G Gullwing

50SH 50 shore **
70SH 70 shore ***
SPD Special delta version
ST1 High click
ST2 Low click

LFS Lead free compatible, silver plated
LFG Lead free compatible, gold plated

** applies to KSC401J50SH only
*** applies to KSC411J70SH, KSC421J70SH and KSC441J70SH

First Angle Projection

Dimensions are shown: mm
Specifications and dimensions subject to change

KSC5 hard actuator 5,6 mm high

Type	Operating force axial FA N (grams)	Operating force lateral FL N (grams) ±30%	Travel to make axial (mm)	Travel to make lateral (mm)	Life expectancy cycles, axial	Life expectancy cycles, lateral
KSC521	2 ± 0.5	1.2 - 2.6	0.25 ± 0.15	0.5 ± 0.25	100,000	10,000
KSC541	3 ± 0.75	1.8 - 3.8	0.25 ± 0.15	0.5 ± 0.25	100,000	10,000

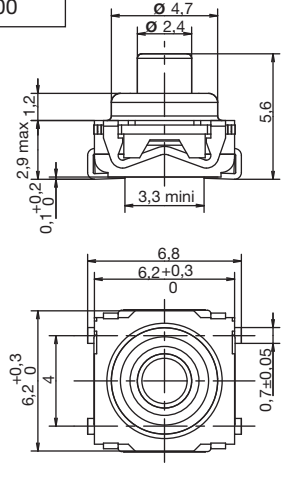

Packaging

Switches delivered on continuous tape & reels of 1,000 pieces, dimensions according to EIA RS-481/ IEC 60286-3 standard
External diameter 330 ± 2 mm

How To Order

Our easy build-a-switch concept allows you to mix and match options to create the switch you need. To order, select desired option from each category and place it in the appropriate box.

However, please note that all the combinations of these options are not feasible.
For any part number different from those listed above, please consult your local representative.

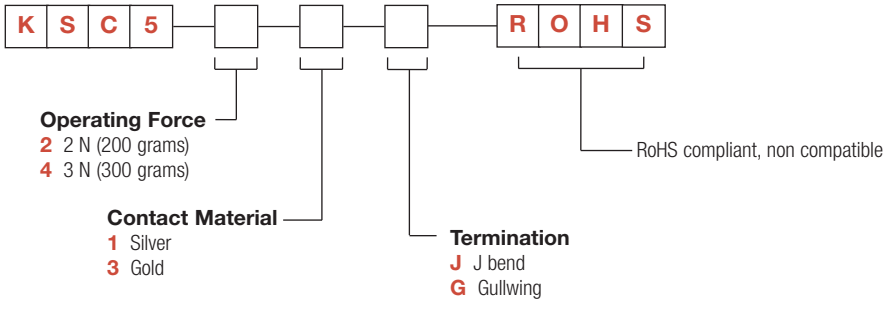

First Angle Projection

Dimensions are shown: mm
Specifications and dimensions subject to change

KSC6 Series
Sealed Tact Switch for SMT

KSC6 hard actuator 7,7 mm high

Type	Operating force FA (Newtons)	Operating life (operations)	Travel (mm)
KSC621	1.7 ± 0.5	300,000	0.4 ± 0.2
KSC631	2.55 ± 0.65	300,000	0.4 ± 0.2
KSC641	3.4 ± 0.85	300,000	0.4 ± 0.2

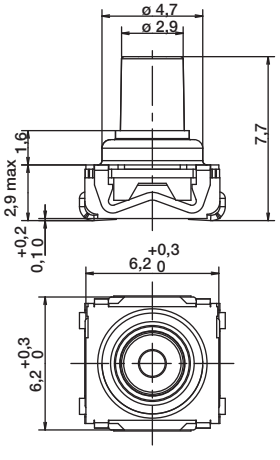

Packaging

Switches delivered on continuous tape & reels of 750 pieces
Dimensions according to EIA RS-481/ IEC 60286-3 standard
External diameter 330 ± 2 mm

How To Order

Our easy build-a-switch concept allows you to mix and match options to create the switch you need. To order, select desired option from each category and place it in the appropriate box.

However, please note that all the combinations of these options are not feasible.
For any part number different from those listed above, please consult your local representative.

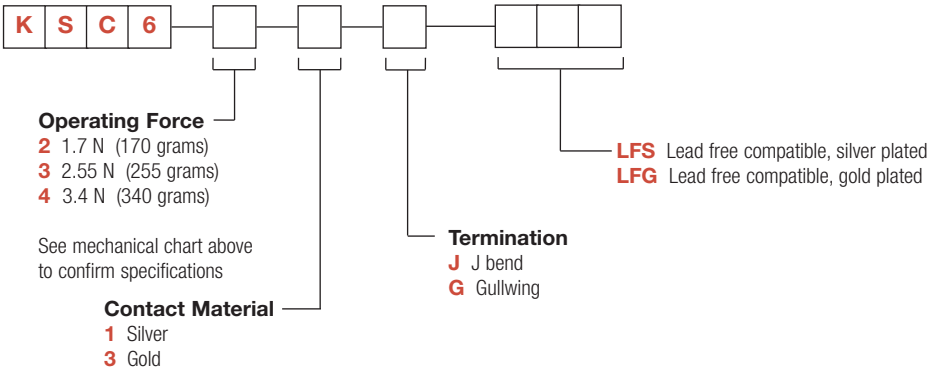

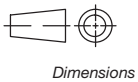

Dimensions are shown: mm
Specifications and dimensions subject to change

KSC7 soft actuator 4,3 mm high

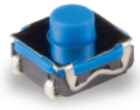

Type	Operating force FA (Newtons)	Operating life (operations)	Travel (mm)
KSC701	1.6 ± 0.6	5,000,000	0.3 ± 0.2
KSC721	2.25 ± 0.55	300,000	0.3 ± 0.15
KSC741	3.9 ± 1	300,000	0.4 ± 0.2

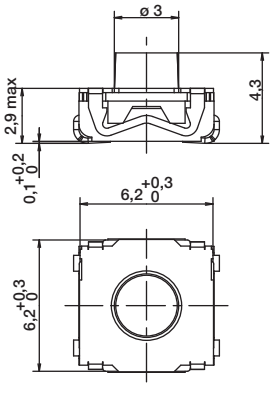

Packaging

Switches delivered on continuous tape & reels of 1,000 pieces
Dimensions according to EIA RS-481/ IEC 60286-3 standard
External diameter 330 ± 2 mm

How To Order

Our easy build-a-switch concept allows you to mix and match options to create the switch you need. To order, select desired option from each category and place it in the appropriate box.

However, please note that all the combinations of these options are not feasible.
For any part number different from those listed above, please consult your local representative.

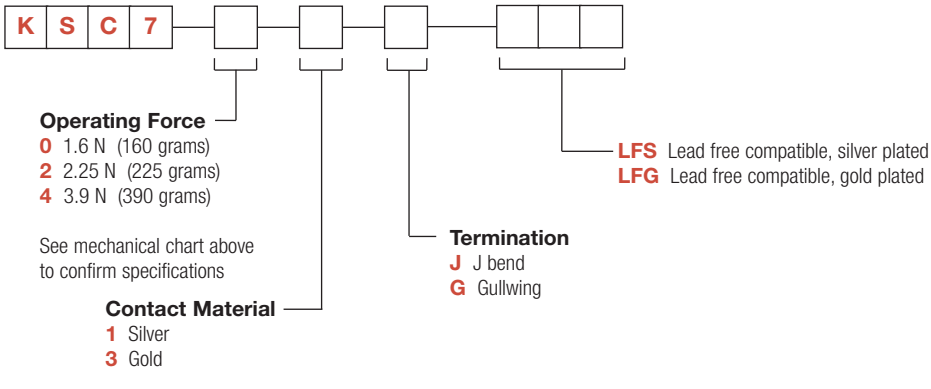

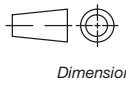

Dimensions are shown: mm
Specifications and dimensions subject to change

KSC8 Series
Sealed Tact Switch for SMT

KSC8 hard actuator 4,9 mm high

Type	Operating force FA (Newtons)	Operating life (operations)	Travel (mm)
KSC821	3.15 ± 0.75	300,000	0.65 ± 0.2
KSC821 OL	1.7 ± 0.5	300,000	0.4 ± 0.2
KSC831 OL	2.55 ± 0.65	300,000	0.4 ± 0.2
KSC841 OL	3.4 ± 0.85	300,000	0.4 ± 0.2

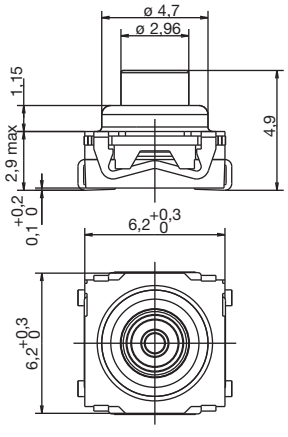

Packaging

Switches delivered on continuous tape & reels of 1,000 pieces
Dimensions according to EIA RS-481/ IEC 60286-3 standard
External diameter 330 ± 2 mm

How To Order

Our easy build-a-switch concept allows you to mix and match options to create the switch you need. To order, select desired option from each category and place it in the appropriate box.

However, please note that all the combinations of these options are not feasible.
For any part number different from those listed above, please consult your local representative.

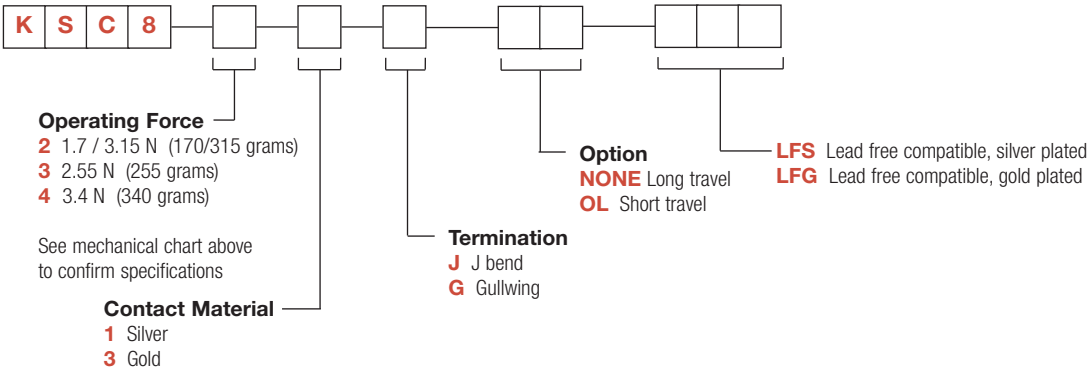

Dimensions are shown: mm
Specifications and dimensions subject to change

KSC9 hard actuator 7,7 mm high

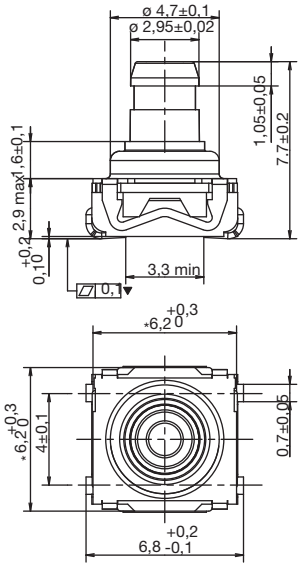

Type	Operating force FA (Newtons)	Operating life (operations)	Travel (mm)
KSC921	1.7 ± 0.5	300,000	0.4 ± 0.2
KSC931	2.25 ± 0.65	300,000	0.4 ± 0.2
KSC941	3.4 ± 0.85	300,000	0.4 ± 0.2

Packaging

Switches delivered on continuous tape & reels of 750 pieces
Dimensions according to EIA RS-481/ IEC 60286-3 standard
External diameter 330 ± 2 mm

How To Order

Our easy build-a-switch concept allows you to mix and match options to create the switch you need. To order, select desired option from each category and place it in the appropriate box.
For any part number different from those listed above, please consult your local representative.

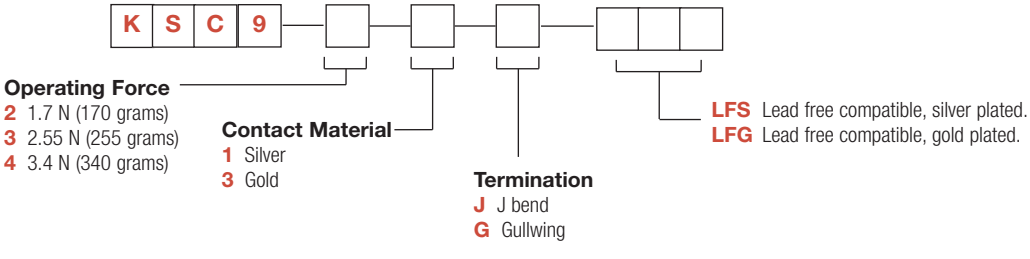

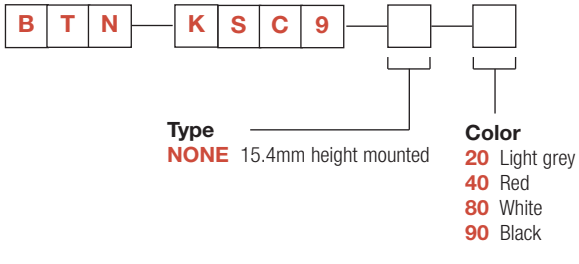

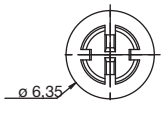

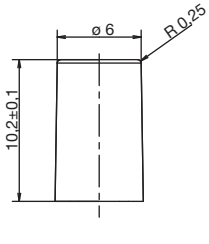

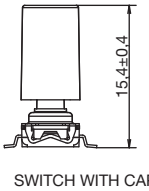

SWITCH WITH CAP

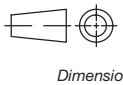

First Angle Projection

Dimensions are shown: mm
Specifications and dimensions subject to change

KSC10 Series
Sealed Tact Switches for SMT

KSC10 soft actuator 4,9 mm high

Type	Operating force FA (Newtons)	Operating life (operations)	Travel (mm)
KSC1001	1.45 ± 0.55	5,000,000	0.45 ± 0.25

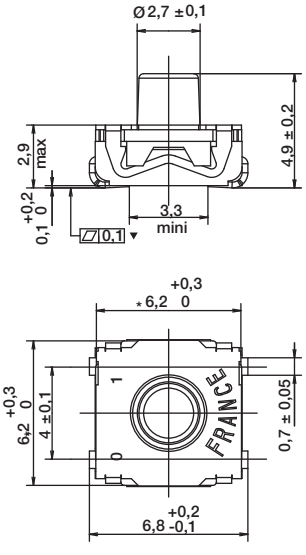

Packaging

Switches delivered on continuous tape & reels of 1,000 pieces
Dimensions according to EIA RS-481/ IEC 60286-3 standard
External diameter 330 ± 2 mm

How To Order

Our easy build-a-switch concept allows you to mix and match options to create the switch you need. To order, select desired option from each category and place it in the appropriate box.

However, please note that all the combinations of these options are not feasible.
For any part number different from those listed above, please consult your local representative.

K S C 10 — 0 — 1 — [ ] — L F S

Operating Force
0 1.45 N (145 grams)

See mechanical chart above to confirm specifications

Contact Material
1 Silver

Termination
J J bend
G Gullwing

LFS Lead free compatible, silver plated

Note: KSC10 offered with yellow actuator as standard, hardness 55 Shore

First Angle Projection

Dimensions are shown: mm
Specifications and dimensions subject to change

KSC4V2 Series
Side Actuated Sealed Tact Switch

Features/Benefits

- ***Full SMD side actuated***
- ***Haptic adaptability***
- ***Pin in paste terminations***
- ***Tape & reel***
- ***IP67***

Typical Applications

- ***Automotive***
- ***Industrial electronics***
- ***Network equipment***
- ***Telecommunications***

Specification

FUNCTION: momentary action
CONTACT ARRANGEMENT: 1 make contact = SPST, N.O.
TERMINALS:
2 pin in paste signal terminals
3 SMD ground terminals

Mechanical

Type	Force (N)	Operating Life (operations)	Travel (mm)
KSC441V2SPDLFS	3.5 ± 1.0	300,000	0.7 ± 0.2
KSC421V270SHLFS	1.55 ± 0.45	300,000	0.5 ± 0.2

NOTE: Basic version is based on KSC441V2 SPDELTA LFS.
Other configurations of haptics are available upon demand.

MISUSE OVERLOAD: 40N with back support
SHEAR FORCE:10N without back support

Electrical

	Silver	Gold
MAXIMUM POWER:	1 VA	0.2 VA
MAXIMUM VOLTAGE:	32 VDC	32 VDC
MINIMUM VOLTAGE:	20 mV	20 mV
MAXIMUM CURRENT:	50 mA	10 mA
MINIMUM CURRENT:	1 mA	0.1 mA

DIELECTRIC STRENGTH (50 Hz, 1 min.): ≥ 250 Vrms
CONTACT RESISTANCE: ≤ 100 mΩ
INSULATION RESISTANCE (100 V, initial stage): > 10^9 Ω
BOUNCE TIME: < 1 ms

Environmental

	Silver	Gold
OPERATING TEMPERATURE:	-40˚C to 85˚C	-40˚C to 125˚C
STORAGE TEMPERATURE:	-55˚C to 85˚C	-55˚C to 125˚C

Process

SOLDERING: Depending on the application, this component is suited to the following methods:

– Cleaning according to typical washing processes.
– Infrared Reflow Soldering in accordance with IEC 61760-1.

TERMINALS: pin in paste, silver or gold plated
TOP PLATE: tin plated
MSL level: 1
Vacuum pick head mandatory

Packaging

In reels of 500 pieces.
Dimensions of reels according to EIA RS481 or IEC 2863.
External diameter 330 mm ± 2 mm.

NOTE: This product is designed and manufactured for general electronic devices. For systems where reliability and safety are required, please contact your sales representative to secure product integration and function to secure usage.

How To Order

Our easy build-a-switch concept allows you to mix and match options to create the switch you need. To order, select desired option from each category and place it in the appropriate box.
For any part number different from those listed above, please consult your local representative.

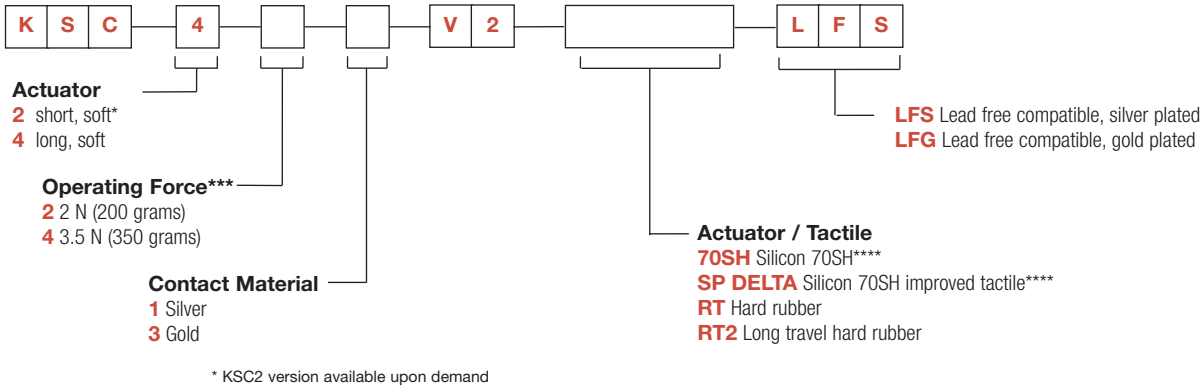

* KSC2 version available upon demand
*** Force available upon demand (variant version)
**** Available for KSC4 only

Dimensions are shown: mm
Specifications and dimensions subject to change

KSC4V2 Series
Side Actuated Sealed Tact Switch

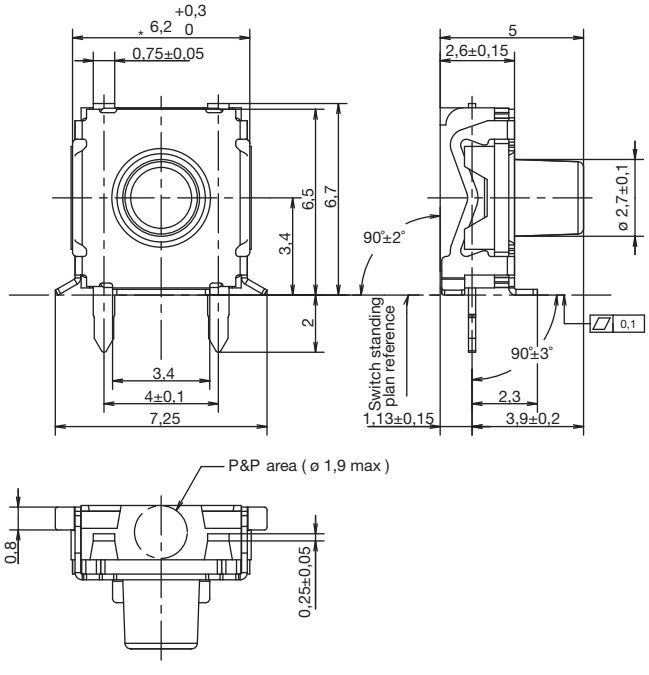

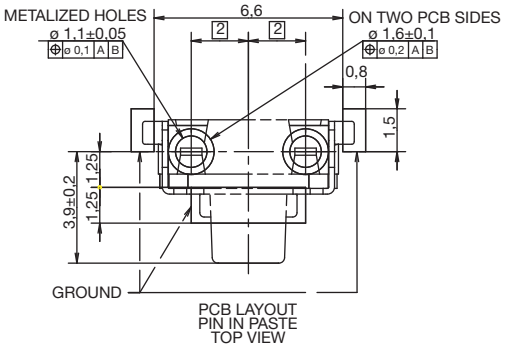

TAPE AND REEL

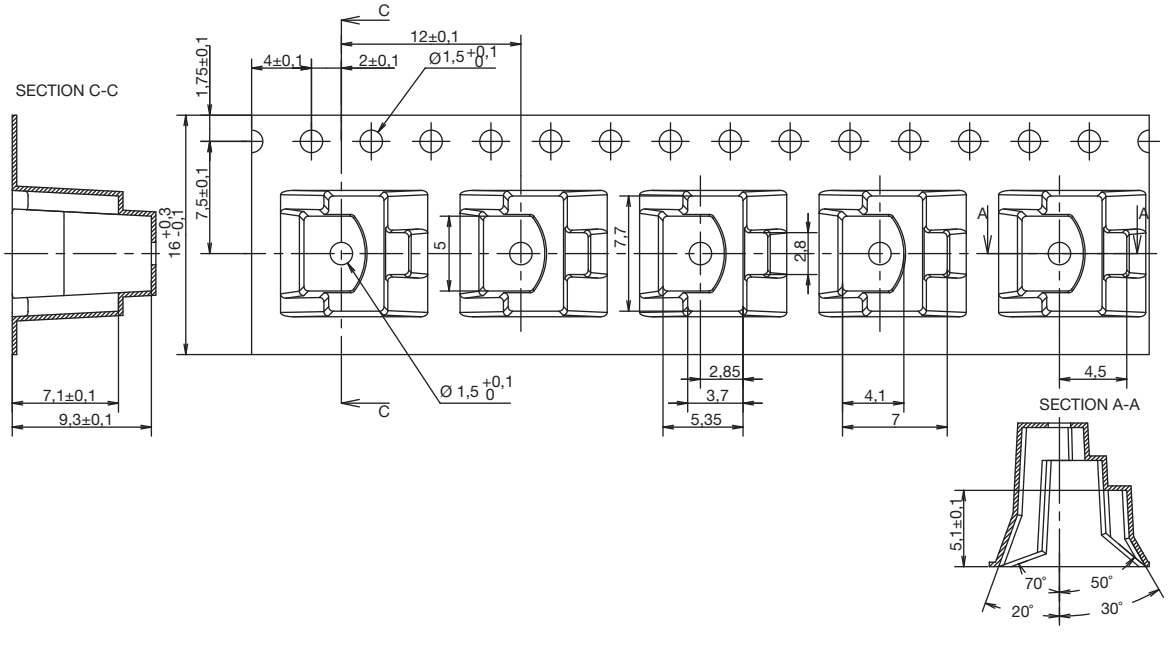

INTEGRATION

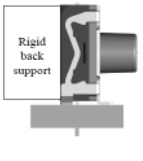

First Angle Projection

Dimensions are shown: mm
Specifications and dimensions subject to change

Features/Benefits

- *Low profile*
- *Cost efficient*
- *J or G terminations*
- *Tape and reel*
- *IP67*

Typical Applications

- *Smart meters*
- *Home appliances*
- *Consumer electronics*
- *Industrial electronics*
- *Telecommunications*

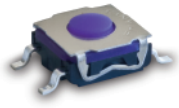

Specification

FUNCTION: momentary action
CONTACT ARRANGEMENT: 1 make contact = SPST, N.O.
TERMINALS: J bend & Gullwing type for SMT

Mechanical

Type	Operating Force FA (Newtons) Min. Max.	Operating Life Operations	Travel (mm)
KSEM31JLFS	1,6 ± 0,6	300,000	0,3 + 0,1/-0,2
KSEM31GLFS	1,6 ± 0,6	300,000	0,3 + 0,1/-0,2
KSEK43JLFS	2,25 ± 0,75	300,000	0,3 ± 0,2
KSEK43GLFS	2,25 ± 0,75	300,000	0,3 ± 0,2

NOTE: For cost effectiveness the tactile feeling is not specified and can change along production. If your application requires a defined tactile effect, please consider KSC series for your application.

Packaging

In reels of 2,000 pieces
Dimensions of reels according to EIA RS481 or IEC 2863.
External diameter 330 mm ± 2 mm.

Electrical

MAXIMUM POWER: 1 VA
MINIMUM/MAXIMUM VOLTAGE: 20 mV / 32 VDC
MINIMUM/MAXIMUM CURRENT: 1 mA /50 mA
DIELECTRIC STRENGTH: (50 Hz, 1 min.): ≥ 250 V
CONTACT RESISTANCE: ≤ 100 mΩ
INSULATION RESISTANCE: (100 V): ≥ 10^9 Ω
BOUNCE TIME: ≤ 1 ms

Environmental

OPERATING TEMPERATURE: -40˚C to 85˚C
STORAGE TEMPERATURE: -55˚C to 85˚C

Process

SOLDERING: Depending on the application, this component is suited to the following methods:
– Cleaning according to typical washing processes.
– Infrared Reflow Soldering in accordance with IEC 61760-1.

NOTE:
Specifications listed above are for switches with standard options. KSE series is not subject to adaptation and/or modification for specific use. If you require additional features, please refer to the KSC series. KSE is not recommended for applications requiring high level of performance such as aerospace, automotive and some industrial applications.

How To Order

Our easy build-a-switch concept allows you to mix and match options to create the switch you need. To order, select desired option from each category and place it in the appropriate box.

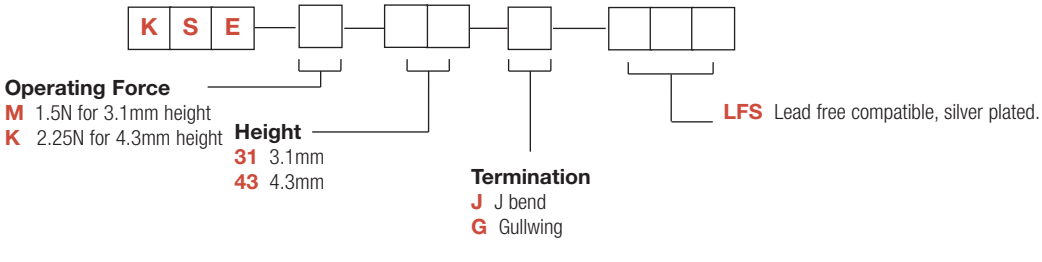

KSE Series
Low Profile Tact Switch

HEIGHT

31 3.1 MM HEIGHT

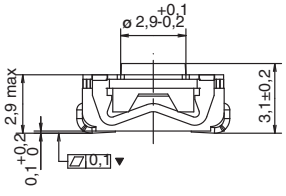

43 4.3 MM HEIGHT

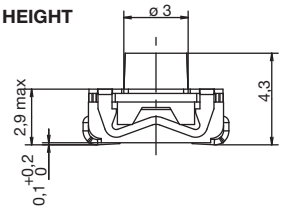

TERMINATION

G GULLWING

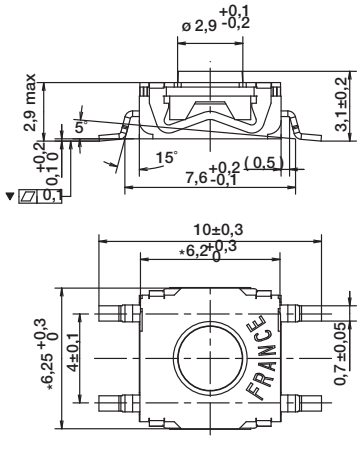

PAD LAYOUT

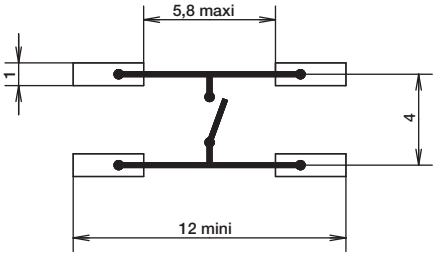

J J BEND

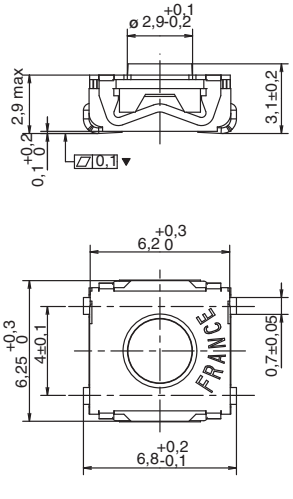

PAD LAYOUT

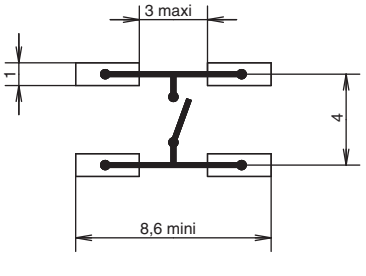

TAPE & REEL

12 mm height

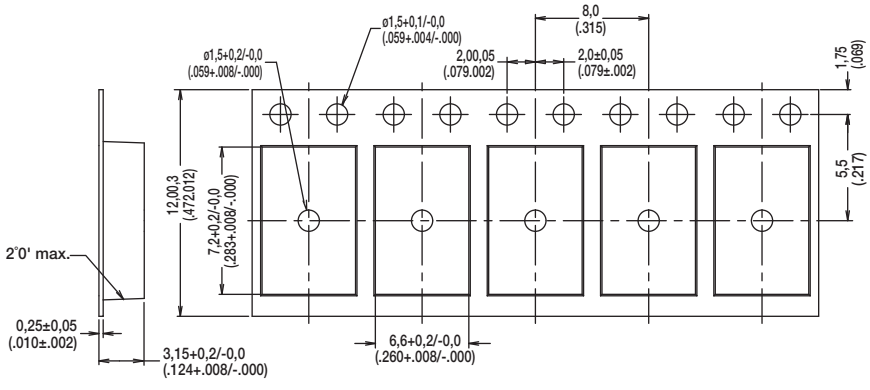

16 mm height

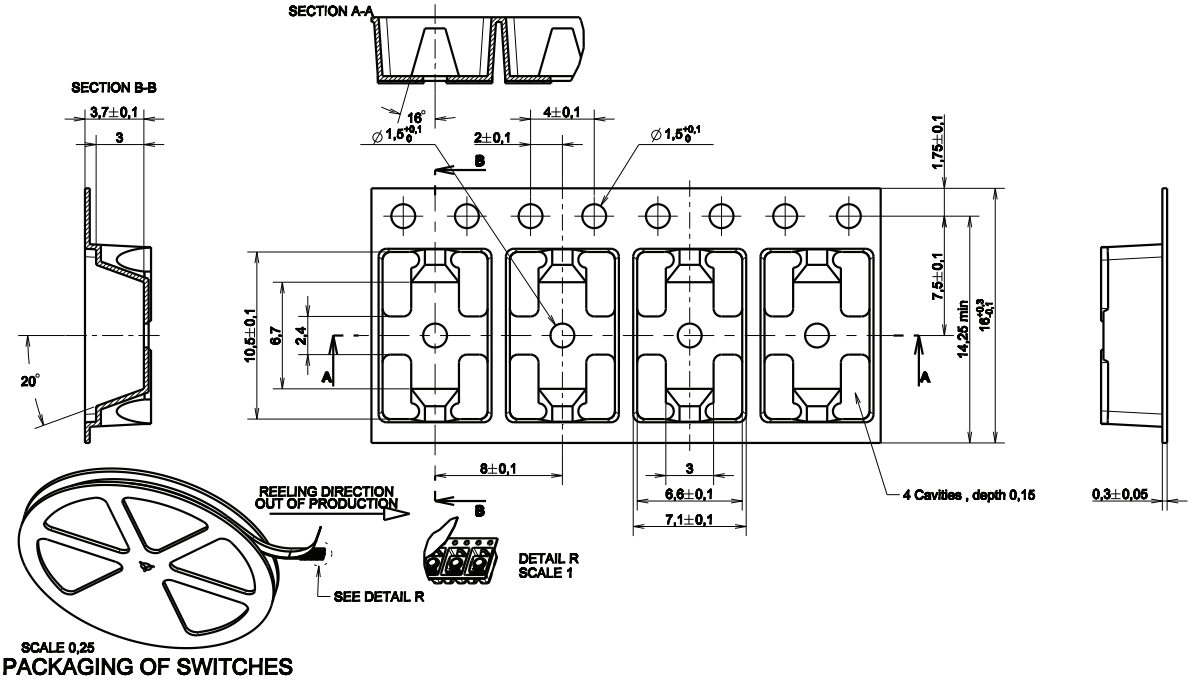

PACKAGING OF SWITCHES

KT Series
Full SMT Top & Side Actuated Sealed Tact Switch

Features/Benefits

- ***Full SMT side-actuated tact switch***
- ***SMT top-actuated tact switch with G or J terminations***
- ***High shear force with extended bracket***
- ***Easy to pick & place with top plate tab***
- ***Rubber or hard plastic actuator***
- ***Press fit or snap fit caps***
- ***RoHS compliant and compatible***

Typical Applications

- ***Telecommunications***
- ***Computer products***
- ***Instrumentation***
- ***Power supply***

Specification

CONTACT ARRANGEMENT: SPST, N.O.
TERMINALS: SMT termination

Electrical

CONTACT RATING: 1.0 VA max. @ 32 V AC or DC max.
ELECTRICAL & MECHANICAL LIFE: 100,000 make-and-break cycles at full load.
DIELECTRIC STRENGTH: 250 Vrms min. @ sea level.
CONTACT RESISTANCE: Below 50 mΩ typ. initial @ 2-4 V DC, 100 mA.
INSULATION RESISTANCE: 10^9 Ω min.

Environmental

OPERATING TEMPERATURES: Ag version: -40˚C to 90˚C
Au version: -40˚C to 125˚C

Process

SOLDERABILITY: Per MIL-STD-202F method 208D, or EIA RS-186E method 9 (1 hour steam aging).
DEGREE OF PROTECTION: IP57; protection against harmful dust deposits, full-scale voltage protection.

Packaging

Switches supplied in anti-static tape and reels per EIA 481-2. Tape and cover strip are conductive for use near statically sensitive components.

NOTE: Specifications listed above are for switches with standard options.
For information on specific and custom switches, consult Customer Service Center.

How To Order

Our easy build-a-switch concept allows you to mix and match options to create the switch you need. To order, select desired option from each category and place it in the appropriate box.

However, please note that all the combinations of these options are not feasible.
For any part number different from those listed above, please consult your local representative.

SWITCH

K T 1 1 — [ ][ ] — [ ][ ][ ][ ] — 3 — [ ] — [ ][ ][ ]

Actuator
B0* Soft, flush
B1* Soft, 0,64 mm
B2* Soft, 2,24 mm
P2** Hard, 2,36 mm
P3** Hard, 1,12 mm
P4** Hard, 3,96 mm
S1*** ø0,1" for Press Fit Caps
S2*** ø0,14" for Snap Fit Caps (with anti-rotation)

Orientation and Mounting Style
SM Top Gullwing
JM Top J Bend ****

SAM Right angle
SA1M Right angle with front solder pad
SA2M Right angle with front solder pad and pick & place tab
SA3M Right angle with pick & place tab

3

Contact Plating
4 Silver
5 Gold

Contact Plating
LFS RoHS compliant and compatible. Silver plated
LFG RoHS compliant and compatible. Gold plated

* B0, B1 & B2 available with A, A1 & A3 mounting bracket only.
** P2, P3, P4 actuators suitable with A1 & A2 mounting bracket only.
*** S1 & S2 available with A1 & A2 mounting bracket only.
**** JM available with B0, B1, B2, P2, P3, P4 without mounting bracket.

BUTTON

To order buttons in bulk

B T N — K T 1 1 — [ ][ ] — [ ][ ]

Button Style
02 Press fit
03 Snap fit, high temperature

Button Color
90 Black
80 Ivory (natural)
40 Red

Dimensions are shown: mm
Specifications and dimensions subject to change

SERIES

KT11

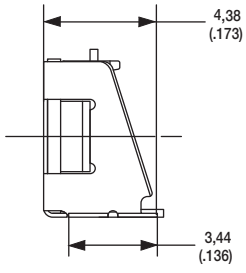

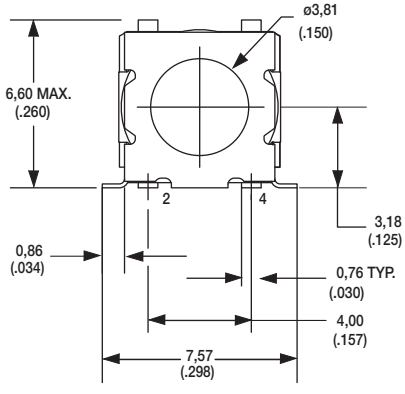

ACTUATOR

B0 SOFT, FLUSH*

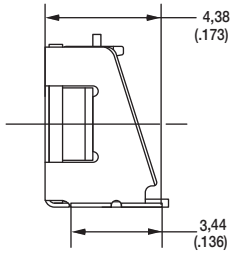

B1 SOFT, 0,64 mm*

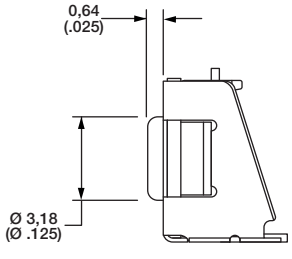

B2 SOFT, 2,24 mm*

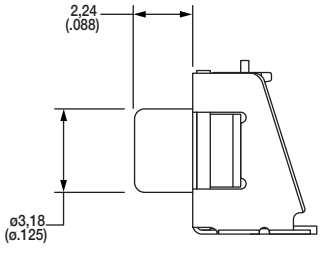

P2 HARD, 2,36 mm

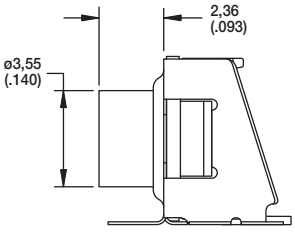

P3 HARD, 1,12 mm

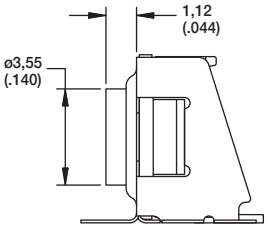

P4 HARD, 3,96 mm**

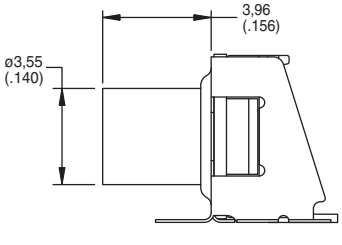

S1 Ø0,1" FOR PRESS FIT CAPS***

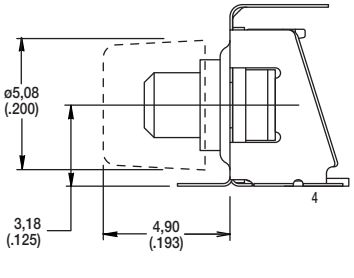

S2 Ø0,14" FOR SNAP FIT CAPS***

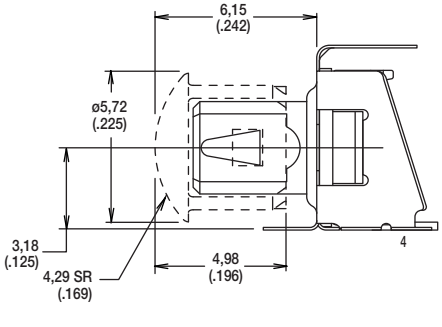

* B0, B1 & B2 available with A, A1 & A3 mounting bracket only.
** P2, P3, P4 actuators suitable with A1 & A2 mounting bracket only.
*** S1 & S2 available with A1 & A2 mounting bracket only.
**** JM available with B0, B1, B2, P2, P3, P4 without mounting bracket.

First Angle Projection

Dimensions are shown: mm
Specifications and dimensions subject to change

KT Series
Full SMT Top & Side Actuated Sealed Tact Switch

ORIENTATION & MOUNTING STYLE

SM TOP GULLWING

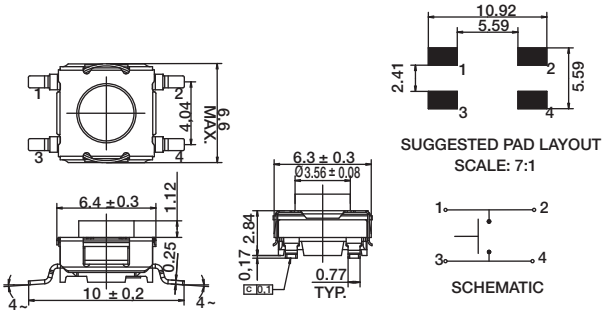

JM TOP J BEND

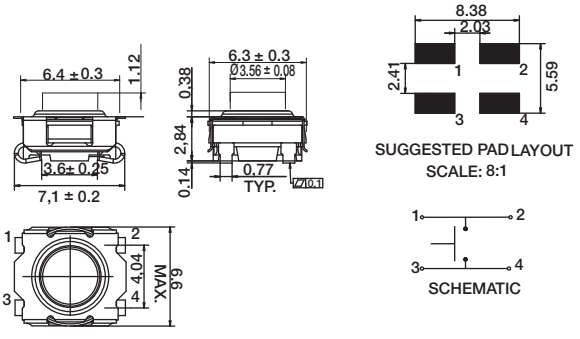

SAM RIGHT ANGLE

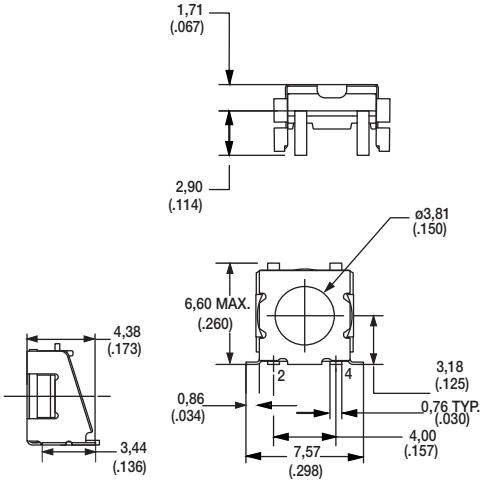

SA1M RIGHT ANGLE WITH FRONT SOLDER PAD

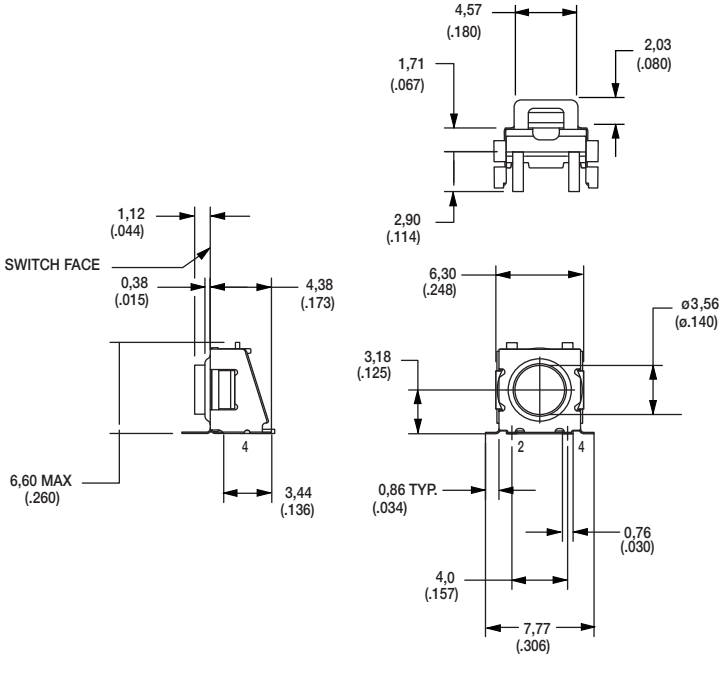

First Angle Projection

Dimensions are shown: mm
Specifications and dimensions subject to change

SA2M RIGHT ANGLE WITH FRONT SOLDER PAD AND PICK & PLACE TAB

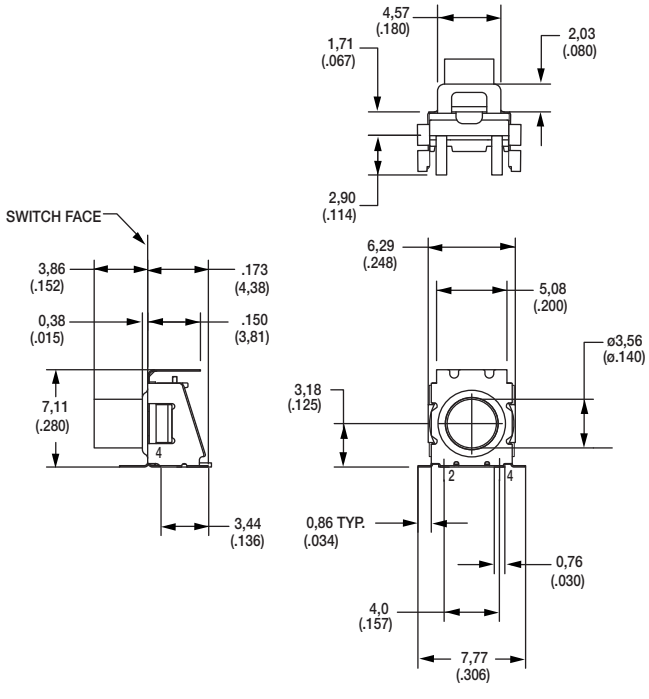

SA3M RIGHT ANGLE WITH PICK & PLACE TAB

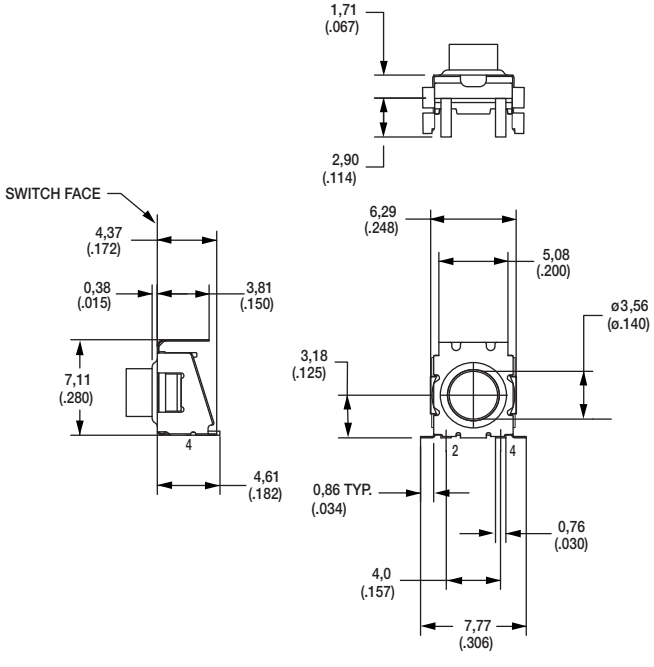

PAD LAYOUT
SA1M & SA2M MOUNTING BRACKET

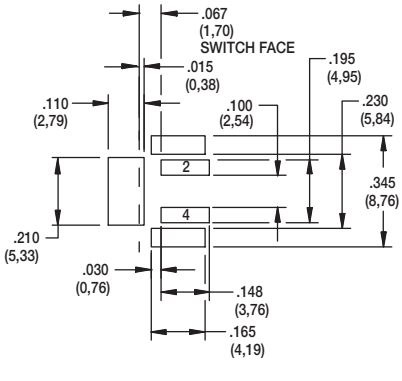

PAD LAYOUT
SAM & SA3M MOUNTING BRACKET

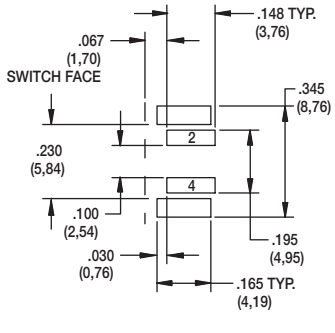

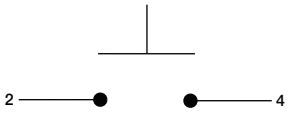

SCHEMATIC

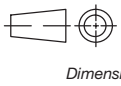

First Angle Projection

Dimensions are shown: mm
Specifications and dimensions subject to change

BUTTON

BUTTON

To order buttons in bulk

02 PRESS FIT

PART NUMBER	Internal Part Number	Button Color
BTN KT11 02 80	5081 01000	Ivory (Natural)
BTN KT11 02 90	5081 02000	Black
BTN KT11 02 40	5081 03000	Red

Materials: Nylon
Finish: Gloss

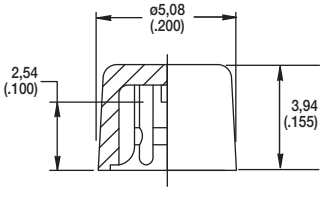

03 SNAP FIT, HIGH TEMPERATURE

PART NUMBER	Internal Part Number	Button Color
BTN KT11 03 80	685B 01000	Ivory (Natural)
BTN KT11 03 90	685B 02000	Black

Materials: Nylon
Finish: Gloss

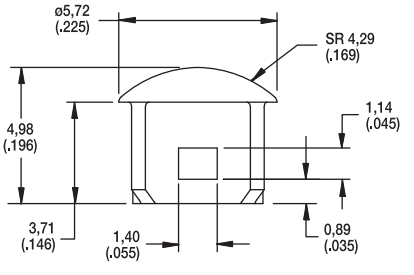

Features

- *High bright LED's*
- *Gold plated dome contact offering superior contact reliability in time*
- *Excellent ergonomics: sharp tactile feel and audible click*
- *Reduced space usage on board "2 in 1"*
- *40 N overload*
- *Tape and reel*
- *RoHS compliant and compatible*

Typical Applications

- *Application requiring illumination*
- *Server, storage*
- *Network infrastructure*
- *Telecom*
- *Medical*

Specification

FUNCTION: momentary action
CONTACT ARRANGEMENT: Normally Open
TERMINALS: SMT with positioning pegs;
SMT without positioning pegs is available, contact Customer Service

Mechanical

Type	Operating force FA[1] Newtons (grams)	Operating life (operations)	Travel (total travel) mm(mm)
K5AT WH 43GP	4.0 (400)	100,000	0,5 (0.8)

[1] Tolerances of operating force FA is ± 25%.

Packaging

Standard: 900 pcs per reel; Reel diameter 380 mm
Reduced: 180 pcs per reel; Reel diameter 180 mm

Electrical

POWER MIN/MAX: 0.02VA / 1.0VA
VOLTAGE MIN/MAX: 20mVdc – 32 Vdc
CURRENT MIN/MAX: 0.1mA – 100mA
CONTACT RESISTANCE: <100m Ω
INSULATION RESISTANCE: >1G Ω initial, >10M Ω after damp heat
BOUNCE TIME: <10ms

Environmental

OPERATING TEMPERATURE: -40˚C to 125˚C
STORAGE TEMPERATURE: -55˚C to 125˚C
RELATIVE HUMIDITY: 90 to 96% according to NF EN 60068-2-30
PROTECTION: dust protection and flux tight (IP 40)
OVERLOAD: 40N min

Process

SOLDERING: Compatible with the lead free soldering profile.
No washing

Materials

CONTACTS: Au over Ni
SOLDERING: Au over Ni
HOUSING: Thermoplastic UL94 V0

How To Order

Our easy build-a-switch concept allows you to mix and match options to create the switch you need. To order, select desired option from each category and and place it in the appropriate box.

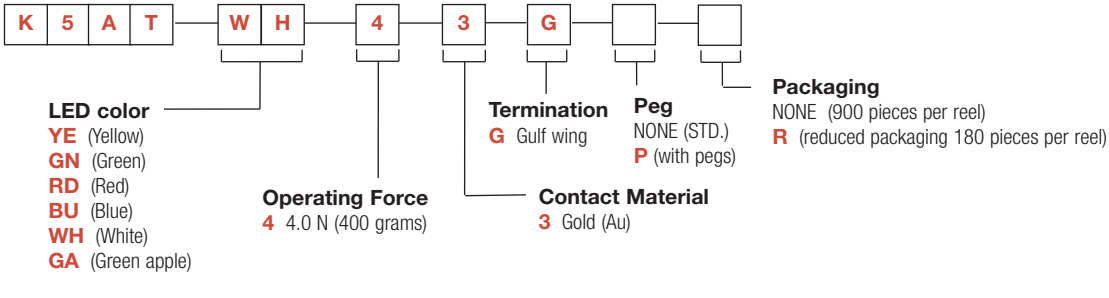

K5AT
Illuminated SMT Tact Switch

K5AT

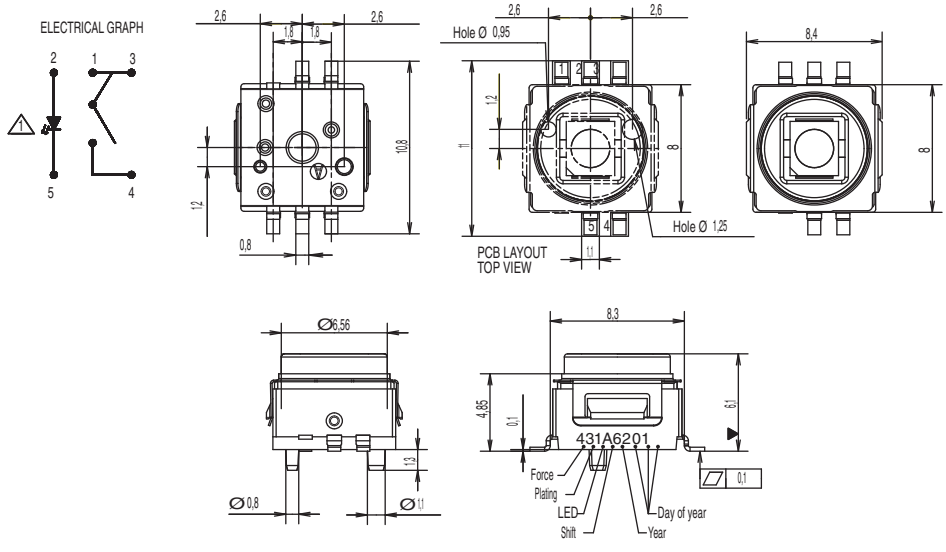

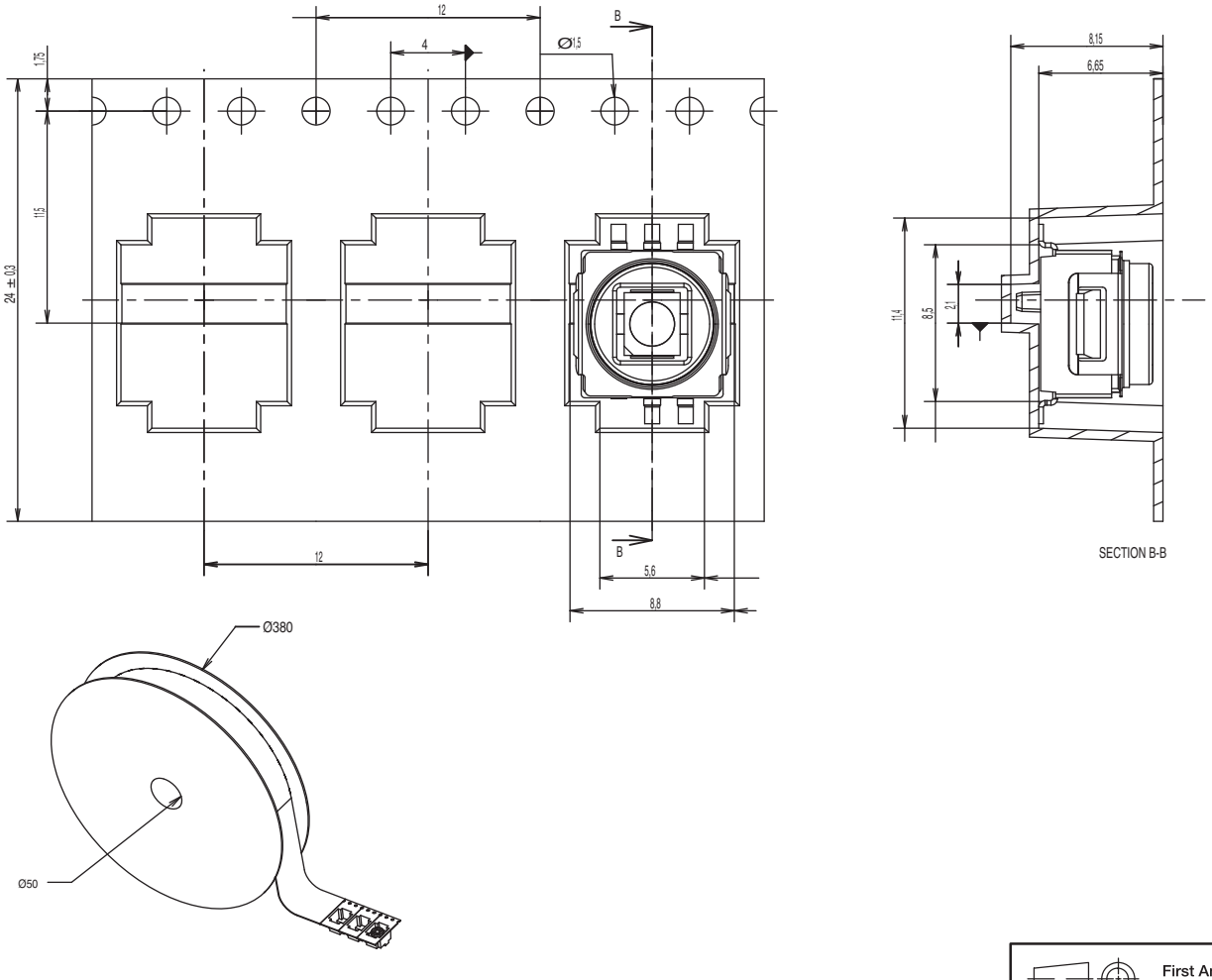

First Angle Projection

Dimensions are shown: mm
Specifications and dimensions subject to change

Lighted SMT Tact Switch with Rugged LED Mounting Process

Features

- *LED assembly without soldering*
- *Various LED options*
- *No light perturbation*
- *Sound haptic*
- *Various climatic classes*

Typical Applications

- *Automotive*
- *Network equipment*
- *Telecommunications*
- *Medical equipment*
- *Industrial controls*

Specification

FUNCTION: momentary action
CONTACT ARRANGEMENT: 1 make control = SPST, N.O.
TERMINALS: Gullwing type for SMT, peg as option, 2 terminals for LED

Mechanical

Type	Actuation Force (N)	Operating Life (operations)	Total Travel (mm)
K8xx41G LFS	4.0	300,000	0.45±0.15

Tolerances on actuation force is ± 0.25%.
SEALING LEVEL: IP40

Illumination Colors

White, blue, pure green, orange, super red
LED technical information available on product specification.
For any extra color, please contact your sales representative.

Packaging

In reels of 900 pieces under sealed foil.
Dimensions of reels according to EIA RS481 or IEC 2863.
External diameter 380 mm.

Electrical

	Silver	Gold
MAXIMUM POWER:	1.0 VA	0.2 VA
MAXIMUM VOLTAGE:	32 VDC	32 VDC
MINIMUM VOLTAGE:	20 mV	20 mV
MAXIMUM CURRENT:	50 mA	10 mA
MINIMUM CURRENT:	1 mA	0.1 mA

DIELECTRIC STRENGTH: (50 Hz, 1 min.) ≥ 250 Vrms
CONTACT RESISTANCE: < 100mΩ
INSULATION RESISTANCE: (100 V, inital stage) > $10^9\Omega$
BOUNCE TIME: < 10 ms

Environmental

OPERATING TEMPERATURE: -40˚C to +85˚C (Silver)
-40˚C to +125˚C (Gold)

STORAGE TEMPERATURE: -55˚C to +85˚C (Silver)
-40˚C to +125˚C (Gold)

Process

SOLDERING: Compatible with the lead free soldering profile.
No washing
MSL level: 5

NOTE:
The specifications show in the datasheet are for reference only and are not valid for design-in work. Please contact your sales representative to request drawings and product specifications.

For systems where reliability and safety are required, please contact your sales representative to secure product integration and function to secure usage.

How To Order

Our easy build-a-switch concept allows you to mix and match options to create the switch you need. To order, select desired option from each category and and place it in the appropriate box.

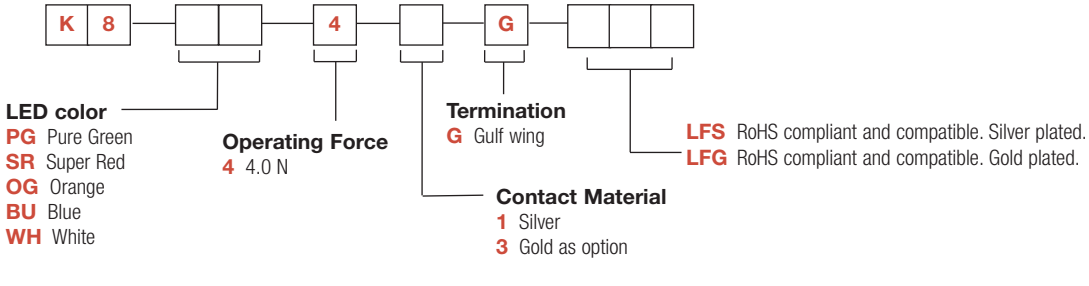

K8
Lighted SMT Tact Switch with Rugged LED Mounting Process

PART NUMBER	REF LED	EMITTED COLOR	LUMINOUS INTENSITY (mcd) If = 20 mA		CHROMATICITY COORDINATES OR PEAK WAVE LENGTH (typ) If = 20 mA		FORWARD VOLTAGE V If = 20 MA	
			min	typ	X	Y	min	max
K8WH41G	LW T67C-S2U1-5K8L	WHITE	224	560	0,33	0,33	3	4.1
K8BU41G	LB T67C-P2R1-35	BLUE	56	140	465 nm		3	4.1
K8PG41G	LP T676-L1M2-25	PURE GREEN	11.2	28	562 nm		1.8	2. 4
K8SR41G	LP T676-Q1R2-1	SUPER RED	71	180	645 nm		1.8	2.3
K8OG41G	LO T676-R1S2-24	ORANGE	112	280	610 nm		1.85	2.35

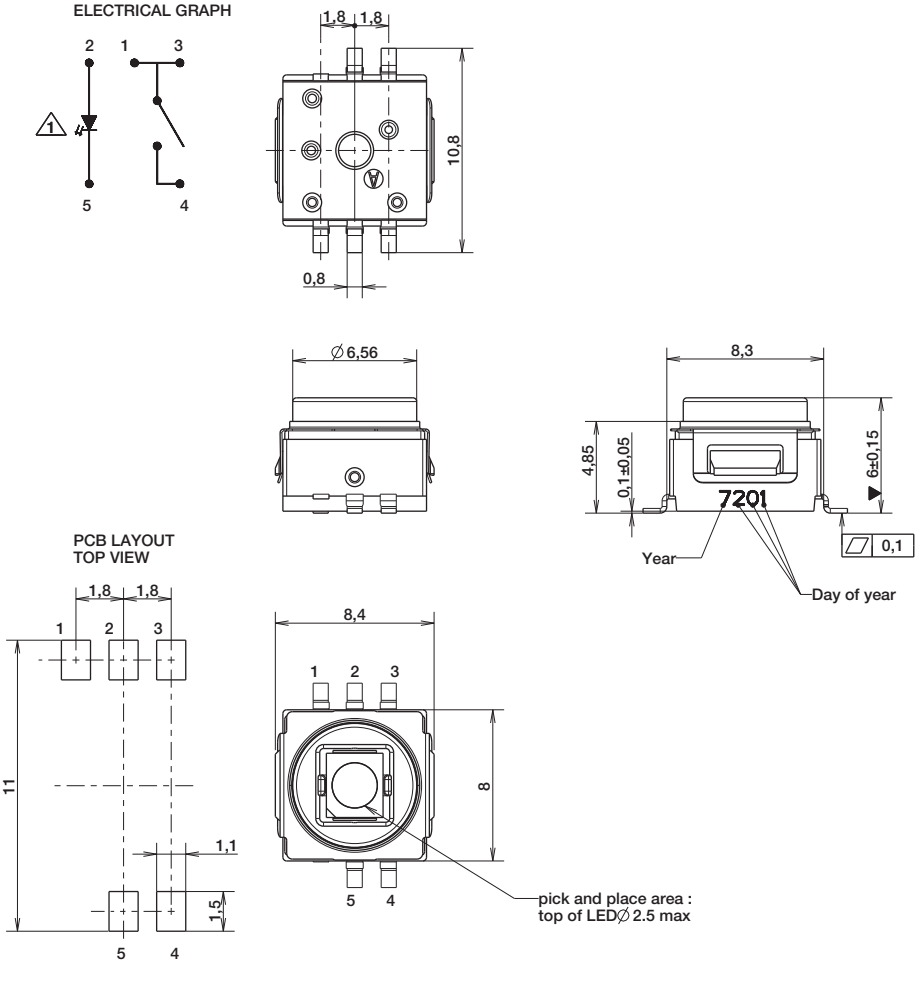

First Angle Projection

Dimensions are shown: mm
Specifications and dimensions subject to change

TAPE & REEL

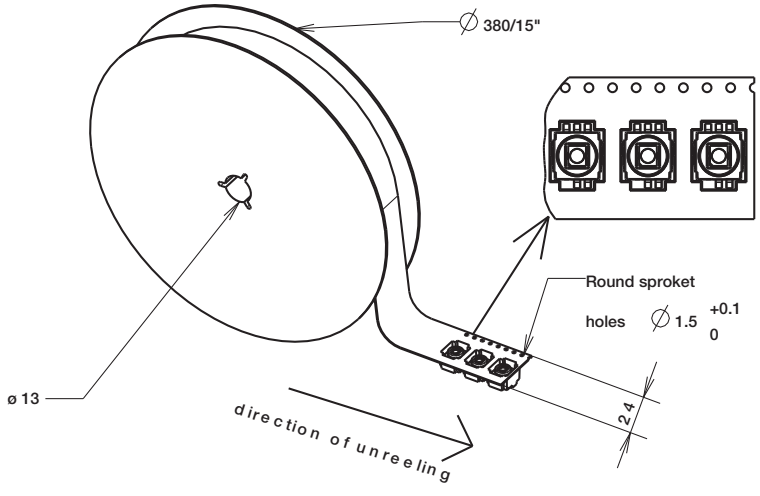
∅ 380/15"
Round sproket
holes ∅ 1.5 +0.1 0
ø 13
direction of unreeling
2.4

K5V
Illuminated Tact Switch

Features

- *Gold plated dome contact SPST/SPDT*
- *Excellent ergonomics*
- *High bright leds*
- *Reduced space usage on board*
- *40 N overload*
- *Tape and reel*
- *RoHS compliant and compatible*

Typical Applications

- *When backlighting and switch are required to be a "2 in 1" component*
- *The dome contact secures a superior contact reliability in time*
- *The ergonomics of K5V provides a long travel, a sharp tactile feel and an audible click*
- *Server, storage, automotive, network infrastructure, medical*

Specification

FUNCTION: momentary action
CONTACT ARRANGEMENT: Normally Open + Normally Closed
TERMINALS:
THT: Through hole terminals with positioning pegs
SMT: Surface mount terminals with positioning pegs
PM: Panel mount solder terminals with wire hole

Mechanical

Version	Operating force FA[1] Newtons (grams)	Operating life (operations)	Travel (total travel) mm(mm)
THT, SMT, PM	4.0 (400)	25,000	1.2 (2.4)

[1] Tolerances of operating force FA is ± 25%.

Packaging

THT:
60 pieces per tray; 1800 pieces per box
SMT:
330 pieces per reel (reel ø 360mm); 1320 pieces per box
PM:
60 pieces per tray; 2100 pieces per box

Electrical

POWER MIN/MAX: 0.02VA / 1.0VA
VOLTAGE MIN/MAX: 20mVdc – 32 Vdc
CURRENT MIN/MAX: 0.1mA – 100mA
CONTACT RESISTANCE: <150m Ω
INSULATION RESISTANCE: >1G Ω initial, >10M Ω after damp heat
BOUNCE TIME: <5ms

Environmental

OPERATING TEMPERATURE: -40˚C to 85˚C
STORAGE TEMPERATURE: -50˚C to 85˚C
RELATIVE HUMIDITY: 90 to 96% according to NF EN 60068-2-30
PROTECTION: dust protection and flux tight
OVERLOAD: 40N min

Process

SMT
Soldering: Compatible with the lead free soldering profile
No washing
THT
Soldering: Compatible with the lead free soldering profile
No washing
PM
Soldering: Low wattage soldering iron (25-50 watts max).
Solder time 3 seconds max. No washing

Materials

LEAD FREE
CONTACTS: Au over Ni
SOLDERING: Au over Ni
HOUSING: Thermoplastic UL94 V0

How To Order

Our easy build-a-switch concept allows you to mix and match options to create the switch you need. To order, select desired option from each category and and place it in the appropriate box.

K 5 V [ ] [ ][ ] 4 3 [ ] [ ][ ]

Actuator
1 without snap-in, clear (THT and PM version only)
2 with snap-ins, clear for light pipe extension (THT and PM version only)
4 without snap-in, light grey (SMT version only)
5 with snap-ins, light grey for light pipe extension (SMT version only)

Actuator color/LED color
BA Translucid/Blue-Amber
GN Translucid/Green
BU Translucid/Blue
RD Translucid/Red
RG Translucid/Red-Green
WH Translucid/White
WL Translucid/White (low luminosity)
YE Translucid/Yellow
YG Translucid/Yellow-Green
CL Transparent/No LED
90 Black Actuator/No LED

Operating Force
4 4.0 N (400 grams)

Contact Material
3 Gold (Au)

Termination
G Surface mount
P Panel mount
T Through-hole 3.5mm
S Through-hole 2.1mm

Option
NONE No option
P3 Terminal 3 is cut
P4 Terminal 4 is cut
P13 Terminal 1 & 3 is cut
P14 Terminal 1 & 4 is cut

Dimensions are shown: mm
Specifications and dimensions subject to change

K5V SMT

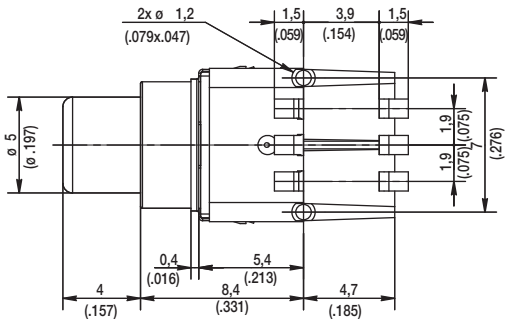

ELECTRICAL DIAGRAM

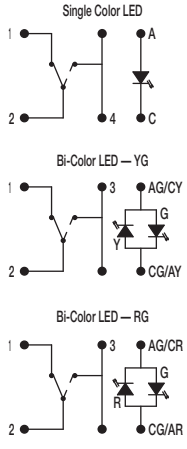

RECOMMENDED PCB LAYOUT (WITH HOLES)

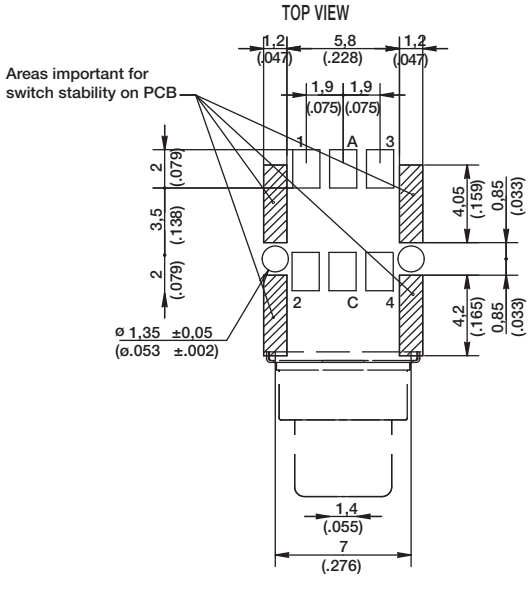

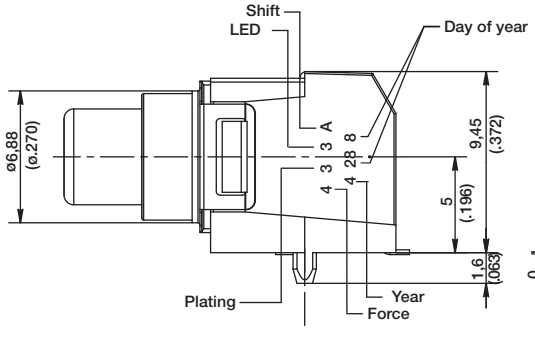

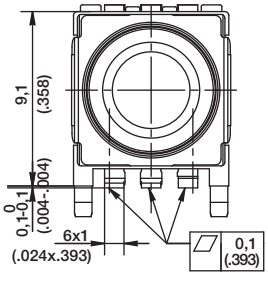

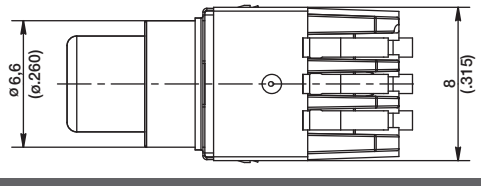

TAPE & REEL

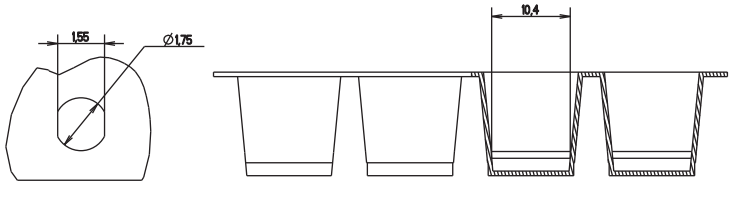

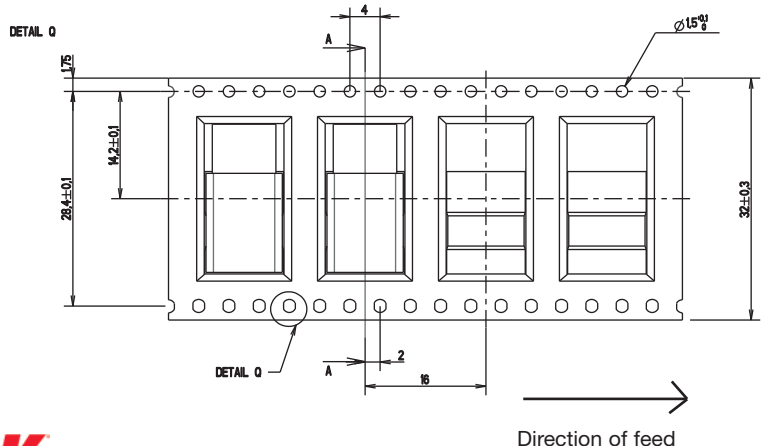

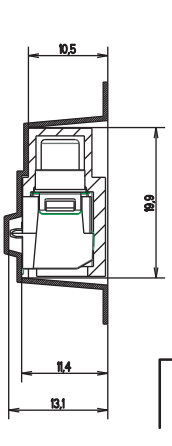

Direction of feed

First Angle Projection

Dimensions are shown: mm
Specifications and dimensions subject to change

K5V
Illuminated Tact Switch

K5V THT

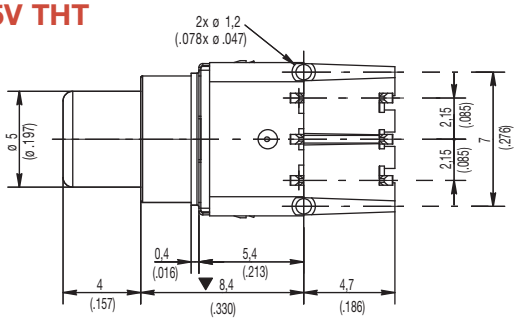

ELECTRICAL DIAGRAM

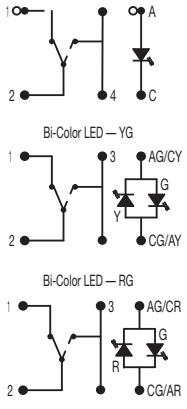

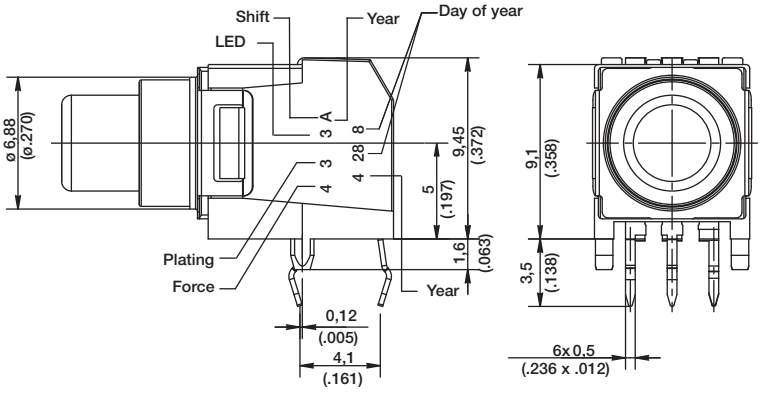

RECOMMENDED PCB LAYOUT (WITH HOLES)

TOP VIEW

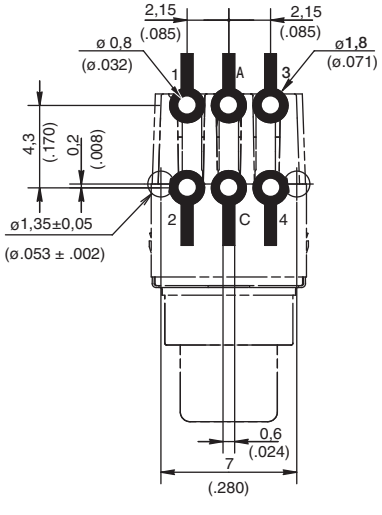

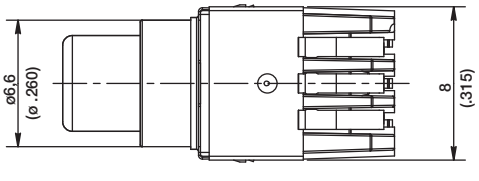

TRAY

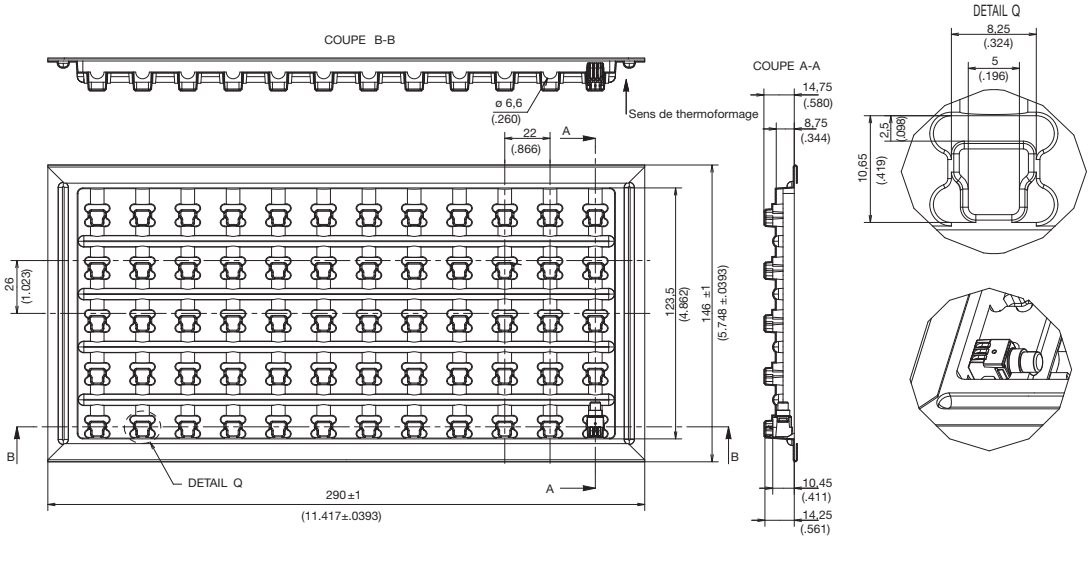

K5V PM

ELECTRICAL DIAGRAM

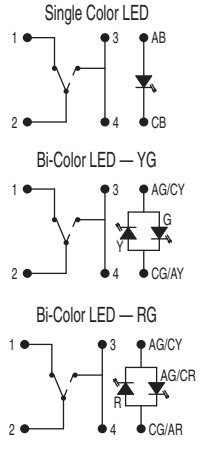

TERMINAL REFERENCES

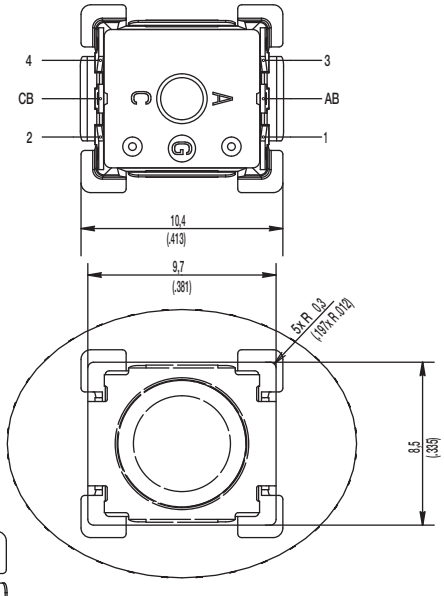

PRODUCT IDENTIFICATION AND DATE CODES

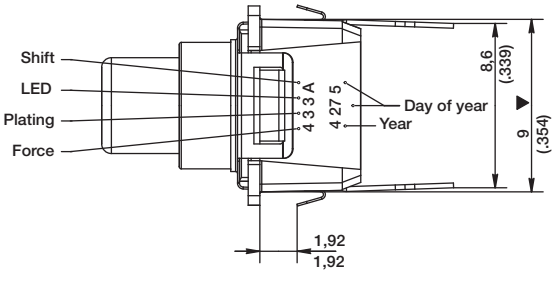

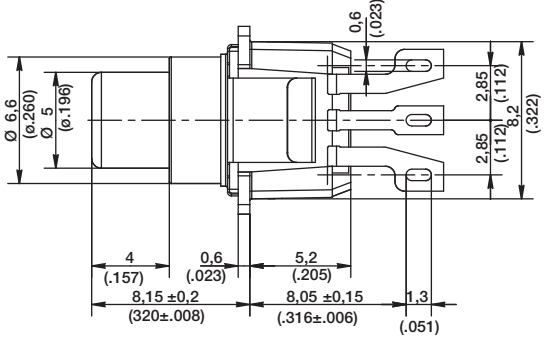

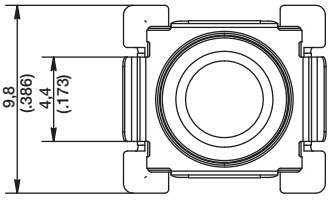

TRAY

SUITABLE FOR PANEL THICKNESS OF 1.8MM MAX

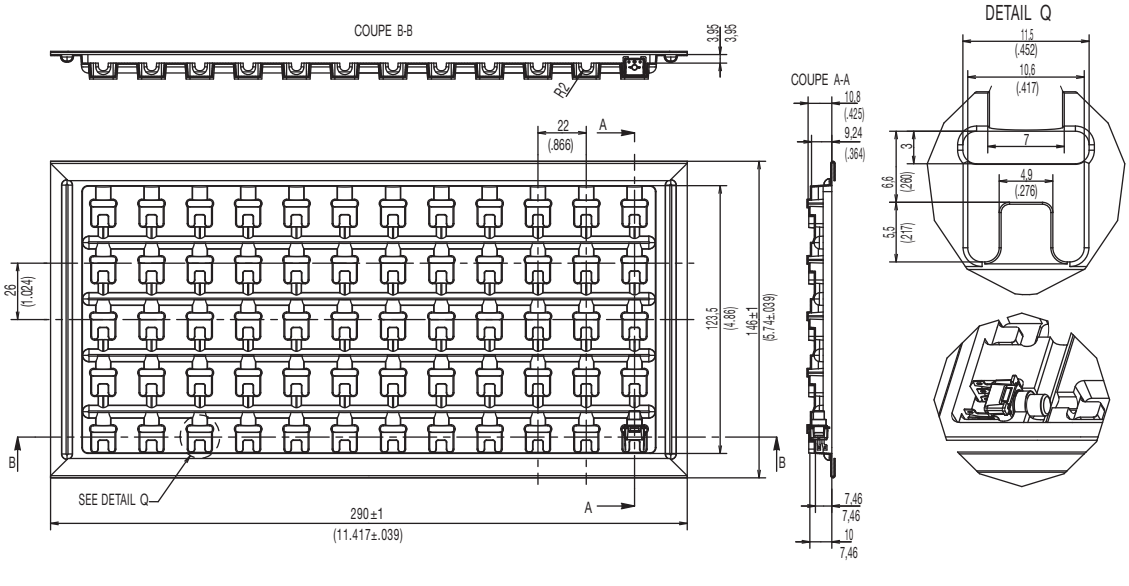

KSF & KSFI Series
Soft Actuated Tact Switch

Features/Benefits

- ***Soft actuated switch***
- ***Sealed front end***
- ***Top and side actuated***

Typical Applications

- ***Low profile keyboards***
- ***Automotive interfaces***
- ***Industrial control***

Specification

FUNCTION: momentary action
CONTACT ARRANGEMENT: 1 make conact = SPST, N.O.
TERMINALS: THT pins

Mechanical

Type	Force (N)	Operating life (operations)	Travel (mm)
KSF0M211LFTR	1.5 ± 0.5	100,000	0.25 ± 0.1
KSF0M311LFTR	1.9 ± 0.5	100,000	0.25 ± 0.1
KSF0M411LFTR	3.0 ± 0.75	100,000	0.25 ± 0.1
KSF0M511LFTR	5.2 ± 1.0	100,000	0.25 ± 0.1
KSFI0V91170SH LFTR	3.4 ± 1.5	100,000	0.65 ± 0.25
KSF0M212 LFT	1.6 ± 0.4	300,000	0.25 ± 0.1
KSFI0M412 70SHLFT	3.2 ± 0.8	100,000	0.75 ± 0.25

Overload resistance: 40N, 1 time
Sealing: IP60 or IP67

NOTE: Other configurations of haptics and terminals are available upon demand. Please also refer to KSF and KSFI Mk2 catalogues pages for other options.

This product is designed and manufactured for general electronic devices. For systems where reliability and safety are required, please contact your sales representative to secure product integration and function to secure usage.

Electrical

	Silver	Gold
MAXIMUM POWER:	1 VA	0.2 VA
MAXIMUM VOLTAGE:	32 VDC	32 VDC
MINIMUM VOLTAGE:	20 mV	20 mV
MAXIMUM CURRENT:	50 mA	10 mA
MINIMUM CURRENT:	1 mA	1 mA

DIELECTRIC STRENGTH (50 Hz, 1 min.): > 250 Vrms
CONTACT RESISTANCE: < 100 m Ω
INSULATION RESISTANCE (100 V, initial stage): > 10^9 Ω
BOUNCE TIME: < 1 ms

Environmental

	Silver	Gold
OPERATING TEMPERATURE:	-40˚C to 85˚C	-40˚C to 125˚C
STORAGE TEMPERATURE:	-55˚C to 85˚C	-40˚C to 125˚C

Process

SOLDERING

Packaging

In boxes of 250 pieces (V type) or 500 pieces (M type).

How To Order

Our easy build-a-switch concept allows you to mix and match options to create the switch you need. To order, select desired option from each category and place it in the appropriate box.

However, please note that all the combinations of these options are not feasible.
For any part number different from those listed above, please consult your local representative.

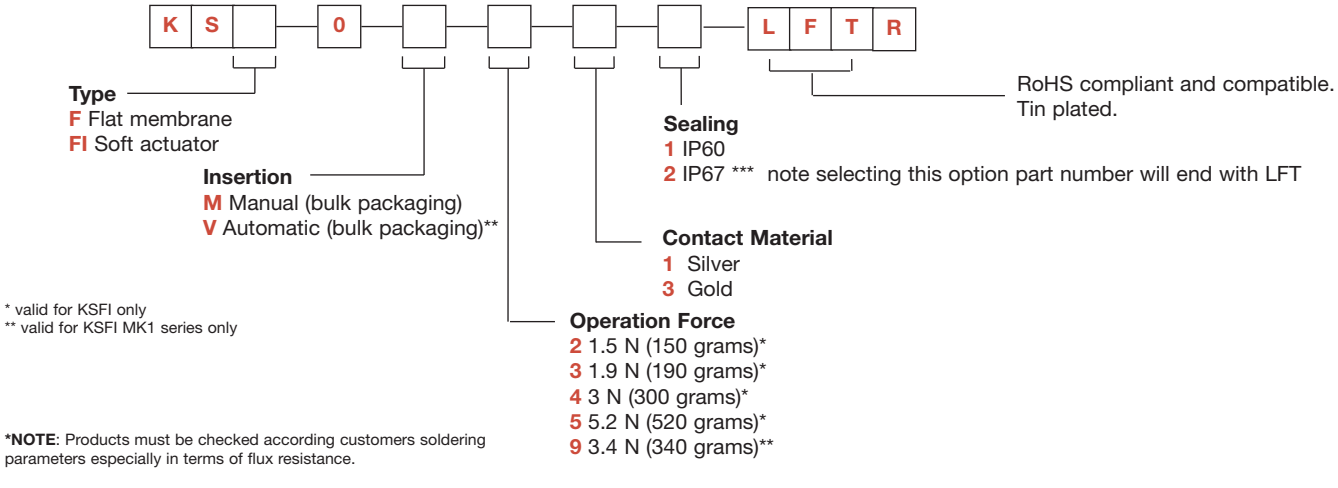

* valid for KSFI only
** valid for KSFI MK1 series only

***NOTE**: Products must be checked according customers soldering parameters especially in terms of flux resistance.

KSF

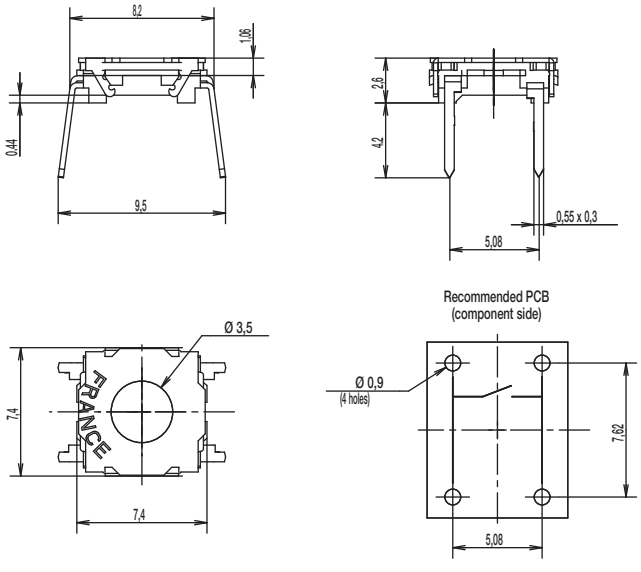

KSFI 0V

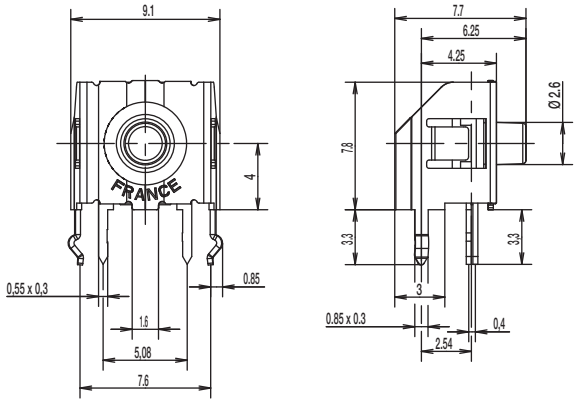

First Angle Projection

Dimensions are shown: mm
Specifications and dimensions subject to change

KSA & KSL Series
Sealed Tact Switch

Features/Benefits

- *Designed for automatic or manual insertion*
- *Cambered terminals to ensure self retention*
- *Top or side actuated*
- *Large choice of caps*
- *RoHS compliant and compatible*

Typical Applications

- *Automotive*
- *Industrial*
- *Telecommunication networks*

Specification

CONTACT ARRANGEMENT: SPST, N.O.
DOUBLE OVERMOLDING ON TERMINAL
SEALING: IP60
TERMINALS: PC pins, ground pin optional

Mechanical

Type	Actuation force N	Operating life (operations)	Travel to make
KSA0M211	1,4 ± 0,4	100,000	0,5 ± 0,2
KSA0M311	1,4 ± 0,4	1,000,000	0,5 ± 0,2
KSA0M411	3 ± 0,75	100,000	0,6 ± 0,2
KSA0M511	5 ± 1,5	100,000	0,7 ± 0,2
KSA0M911	3 ± 0,75	500,000	0,6 ± 0,2
KSL0M211	1,4 ± 0,4	100,000	0,5 ± 0,2
KSL0M311	1,4 ± 0,4	1,000,000	0,5 ± 0,2
KSL0M411	3 ± 0,75	100,000	0,6 ± 0,2
KSL0M511	5 ± 1,5	100,000	0,7 ± 0,2
KSL0M911	3 ± 0,75	500,000	0,6 ± 0,2

NOTE: Other versions in terms of force, termination length and corrosion protection available. Please contact your sales representative.
This data sheet does not provide enough information for applications which require a certain level of quality or safety such as automotive, medical systems, safety equipment. Please contact your sales representative to get contractual specification package.

Electrical

	Silver	Gold
MAXIMUM POWER:	1 VA	0.2 VA
MAXIMUM VOLTAGE:	32 VDC	32 VDC
MINIMUM VOLTAGE:	20 mV	20 mV
MAXIMUM CURRENT:	50 mA	10 mA
MINIMUM CURRENT:	1 mA	1 mA

DIELECTRIC STRENGTH: 250 Vrms
CONTACT RESISTANCE: ≤ 100m Ω
INSULATION RESISTANCE (100 V): ≥ 10^9 Ω
BOUNCE TIME: ≤ 1 ms

Environmental

	Silver	Gold
OPERATING TEMPERATURE:	-40˚C to 85˚C	-40˚C to 125˚C
STORAGE TEMPERATURE:	-40˚C to 85˚C	-55˚C to 125˚C

Process

Wave soldering compatible with lead free soldering profile.

Packaging

Can be delivered in tubes of 65 pieces for automatic insertion or in boxes of 500 pieces for manual insertion (250 pieces for KSL, KSLV, KSAV).

How To Order

Our easy build-a-switch concept allows you to mix and match options to create the switch you need. To order, select desired option from each category and place it in the appropriate box.

However, please note that all the combinations of these options are not feasible.
For any part number different from those listed above, please consult your local representative.

SWITCH K S [ ] [ ] [ ] [ ] [ ] 1 L F T R

Actuator Type
A Short hard plastic
L Long hard plastic

Ground Terminal
0 Without
1 With*

Insertion
M Manual (bulk packaging)
A Automatic (tube packaging)
V Vertical (bulk packaging)*

Contact Material
1 Silver contacts
3 Gold contacts

Operation Force
2 1.3 N (130 grams), 100,000 operations
3 1.3 N (130 grams), 1,000,000 operations
4 3 N (300 grams), 100,000 operations
5 5 N (500 grams), 100,000 operations
9 3 N (300 grams), 500,000 operations

RoHS compliant and compatible. Tin plated.

***Note:** "1" Ground terminal not compatible with "V" insertion

BUTTONS Buttons must be ordered separately and will be supplied in bulk.

B T N K 0 [ ] [ ] [ ]

Button Style
K01 10 mm square snap-on
K02 ø8 mm round snap-on
K03 8,5 x 3,8 mm single floating
K04 18,5 x 3,8 mm double floating
K05 5 mm square
K06 10 x 2,5 mm snap-on handle
K07 5 mm square
K08 9,9 x 5 mm rectangular
K09 ø6,2 mm round

Button Color
10 Dark gray
20 Light gray
30 Yellow
40 Red
50 Green
60 Blue
70 Gray-blue
80 Ivory
90 Black

***NOTE**: Please note that all buttons are not RoHS compliant. Please check the compliance with your C&K sales representative.

Dimensions are shown: mm
Specifications and dimensions subject to change

ACTUATOR TYPE

KSA & KSL

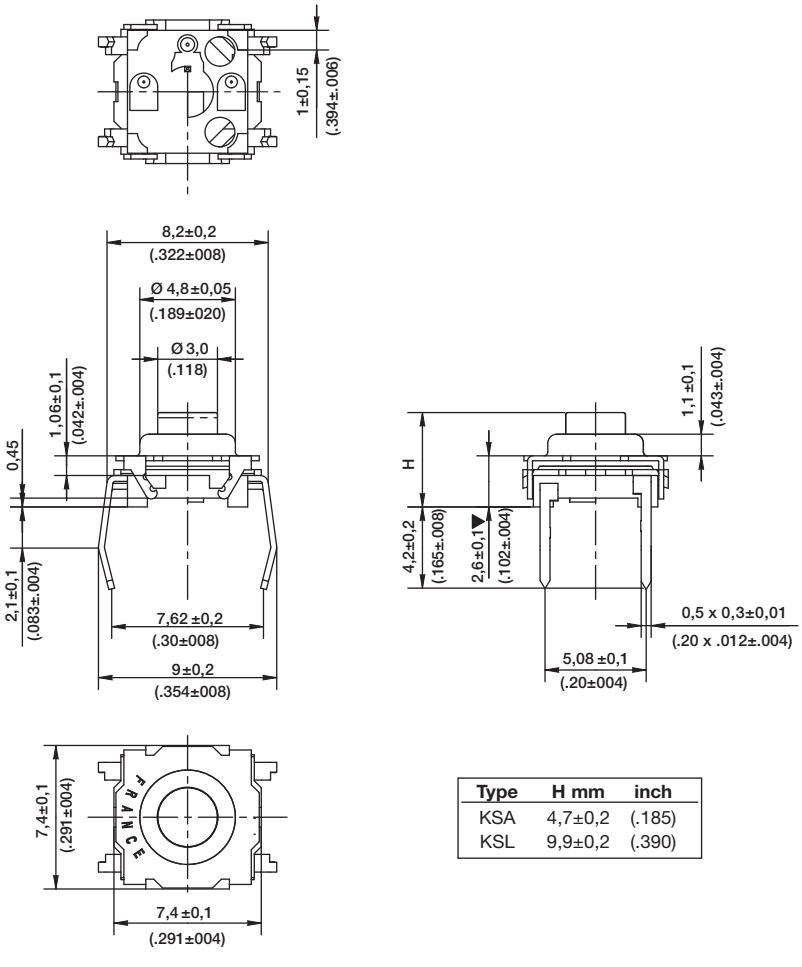

Type	H mm	inch
KSA	4,7±0,2	(.185)
KSL	9,9±0,2	(.390)

GROUND TERMINAL

0 WITHOUT

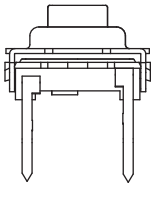

1* WITH

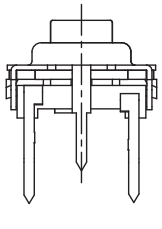

*Not compatible with "V" insertion

First Angle Projection

Dimensions are shown: mm
Specifications and dimensions subject to change

KSA & KSL Series
Sealed Tact Switch

INSERTION

M MANUAL (BULK PACKAGING)

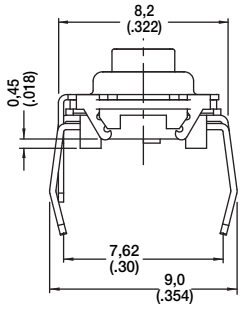

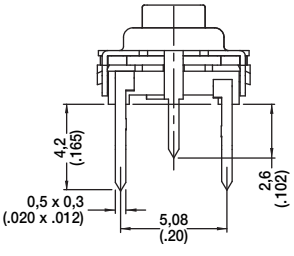

PCB LAYOUT

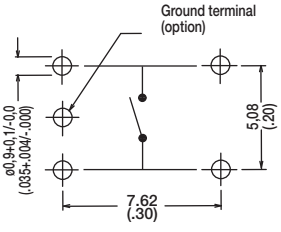

A AUTOMATIC (TUBE PACKAGING, 65 PIECES PER TUBE)

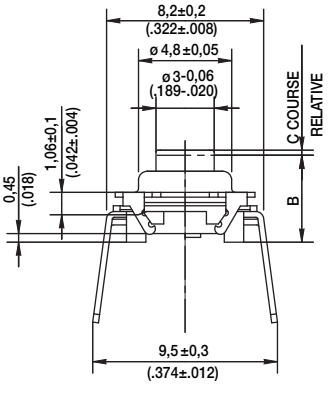

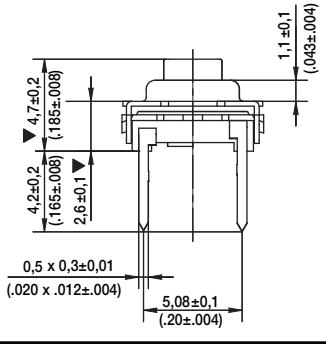

PCB LAYOUT

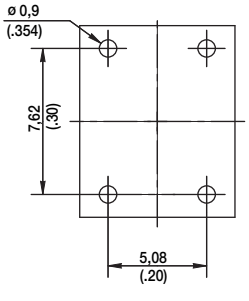

V VERTICAL

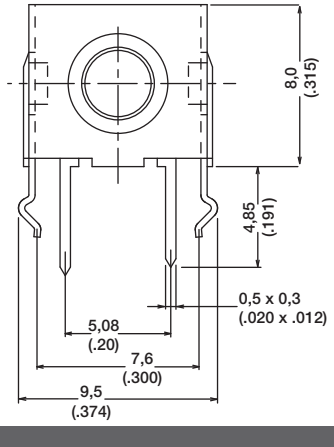

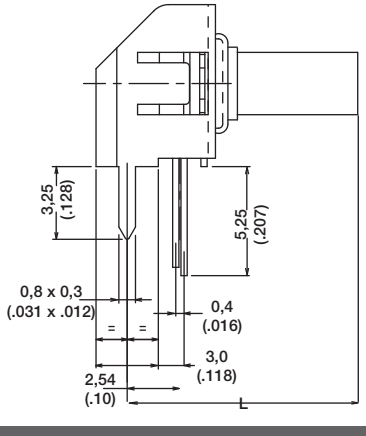

PCB LAYOUT

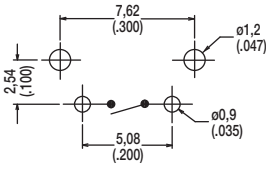

DIMENSION L

Type	L mm	inch
KSA0V	5,8	.228
KSL0V	11,1	.437

OPERATING FORCE

OPTION CODE	OPERATING FORCE
2	1.3 N (130 grams) 100,000 operations
3	1.3 N (130 grams) 1,000,000 operations
4	3.0 N (300 grams) 100,000 operations
5	5.0 N (500 grams) 100,000 operations
9	3.0 N (300 grams) 500,000 operations

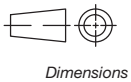
First Angle Projection

Dimensions are shown: mm
Specifications and dimensions subject to change

CONTACT MATERIAL

OPTION CODE	CONTACT MATERIAL
1	Silver contacts
3	Gold contacts

SEALING

OPTION CODE	SEALING
1	Sealing level IP60

BUTTONS

Buttons must be ordered separately and will be supplied in bulk.

BUTTON TYPE	KSA	KSL	KSAV	KSLV
K01	X			
K02	X			
K03	X	X	X	X
K04	X	X	X	X
K05		X		X
K06	X			
K07		X		X
K08		X		X
K09		X		X

K01

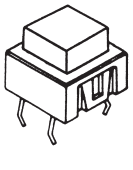

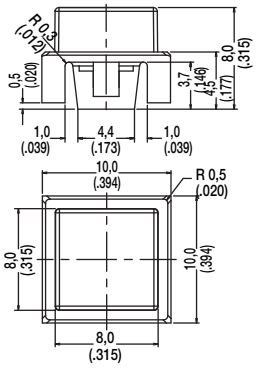

K02

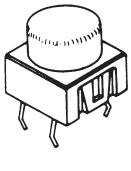

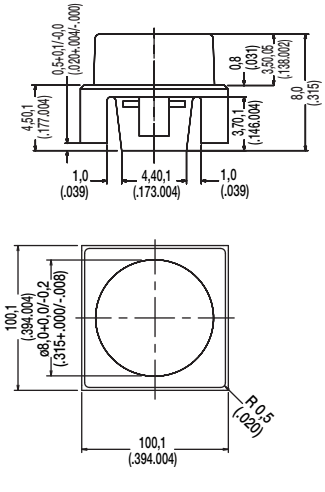

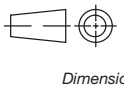
First Angle Projection

Dimensions are shown: mm
Specifications and dimensions subject to change

KSA & KSL Series
Sealed Tact Switch

K03

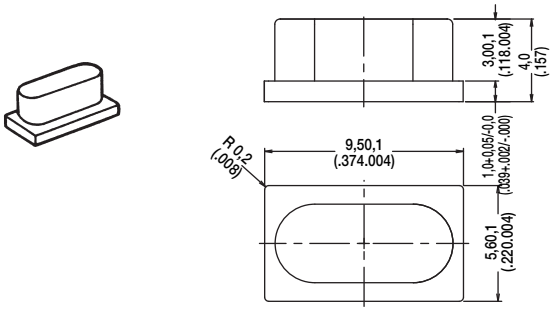

K04

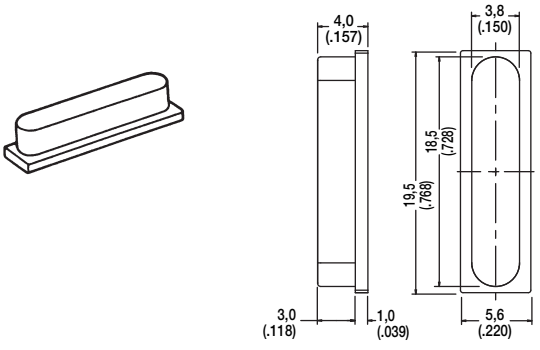

K05

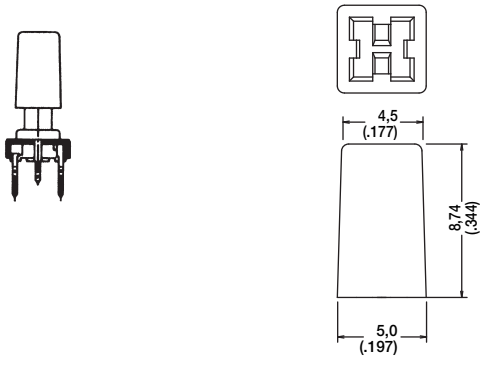

K06

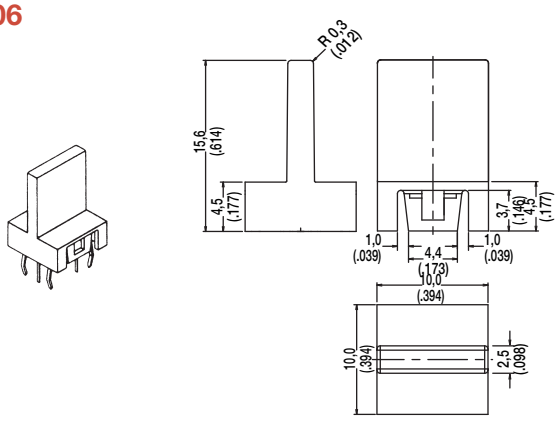

K07

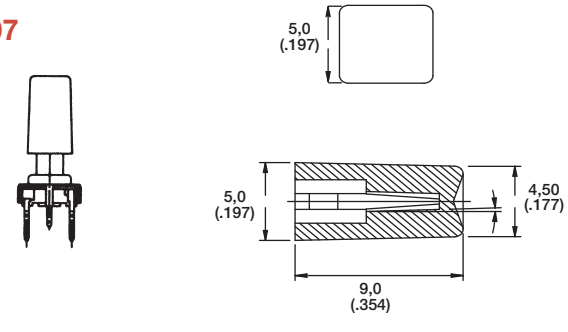

K08

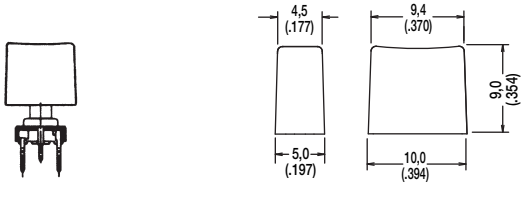

K09

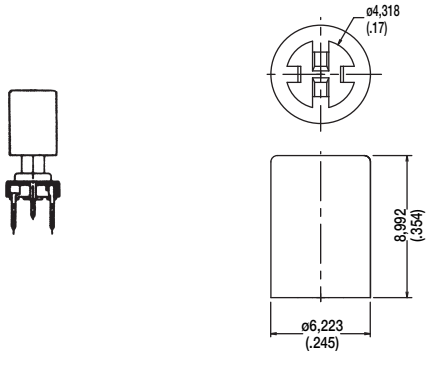

First Angle Projection

Dimensions are shown: mm
Specifications and dimensions subject to change

KSA & KSL MKII Series
High Performance Sealed Tact Switch

Features/Benefits

- ***Highest tact switch sealing performance***
- ***Improved sealing through a modification of the crimping technique and to a double overmolding of the terminal***
- ***Totally sealed***
- ***Up to 1M operations***
- ***RoHS compliant and compatible***

Typical Applications

- ***Automotive***
- ***Industrial***
- ***Telecommunication networks***
- ***Household appliances***
- ***Heating control systems***

Specification

CONTACT ARRANGEMENT: SPST, N.O.
TERMINALS: PC pins
SEALING: IP65
Double overmold on terminals

Mechanical

Type	Actuation force N (grams)	Operating life (operations)	Travel to make
KSA0M212	1,3 ± 0,3	100,000	0,5 ± 0,15
KSA0M312	1,3 ± 0,3	1,000,000	0,5 ± 0,15
KSA0M412	3,25 ± 0,5	100,000	0,6 ± 0,25
KSA0M512	5 ± 1,25	100,000	0,7 ± 0,25

Packaging

Delivered in boxes of 500 pieces (250 pieces for KSL)

NOTE: Specifications listed above are for switches with standard options.
For information on specific and custom switches, consult Customer Service Center.

Other versions in terms of force, termination length and corrosion protection available.
Please contact your sales representative.

This data sheet does not provide enough information for applications which require a certain level of quality or safety such as automotive, medical systems, safety equipment.
Please contact your sales representative to get contractual specification package.

Electrical

	Silver	Gold
MAXIMUM POWER:	1 VA	0.2 VA
MAXIMUM VOLTAGE:	32 VDC	32 VDC
MINIMUM VOLTAGE:	20 mV	20 mV
MAXIMUM CURRENT:	50 mA	10 mA
MINIMUM CURRENT:	1 mA	1 mA

DIELECTRIC STRENGTH: ≥ 250 Vrms
CONTACT RESISTANCE: ≤ 100m Ω
INSULATION RESISTANCE (100 V): ≥ 10^9 Ω
BOUNCE TIME: ≤ 1 ms

Environmental

	Silver	Gold
OPERATING TEMPERATURE:	–40˚C to 85˚C	–40˚C to 125˚C
STORAGE TEMPERATURE:	–40˚C to 85˚C	–55˚C to 125˚C

Process

Wave soldering compatible with lead free soldering profile.

How To Order

Our easy build-a-switch concept allows you to mix and match options to create the switch you need. To order, select desired option from each category and place it in the appropriate box.

However, please note that all the combinations of these options are not feasible.
For any part number different from those listed above, please consult your local represenative.

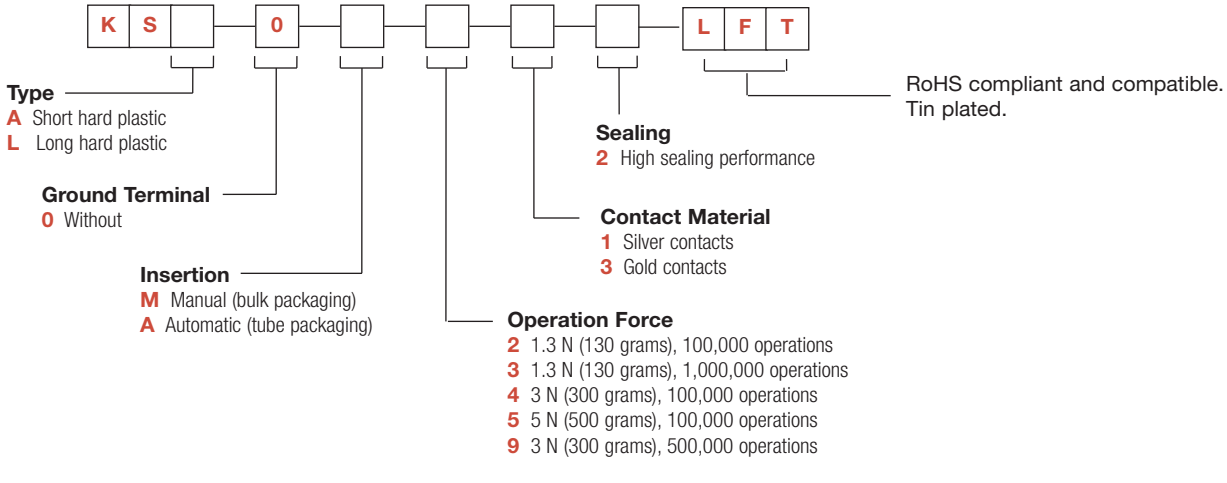

Dimensions are shown: mm
Specifications and dimensions subject to change

KSA & KSL MKII Series
High Performance Sealed Tact Switch

TYPE ☐☐☐ ▪ ▪ ▪ ▪ ▪

KSA & KSL MANUAL INSERTION

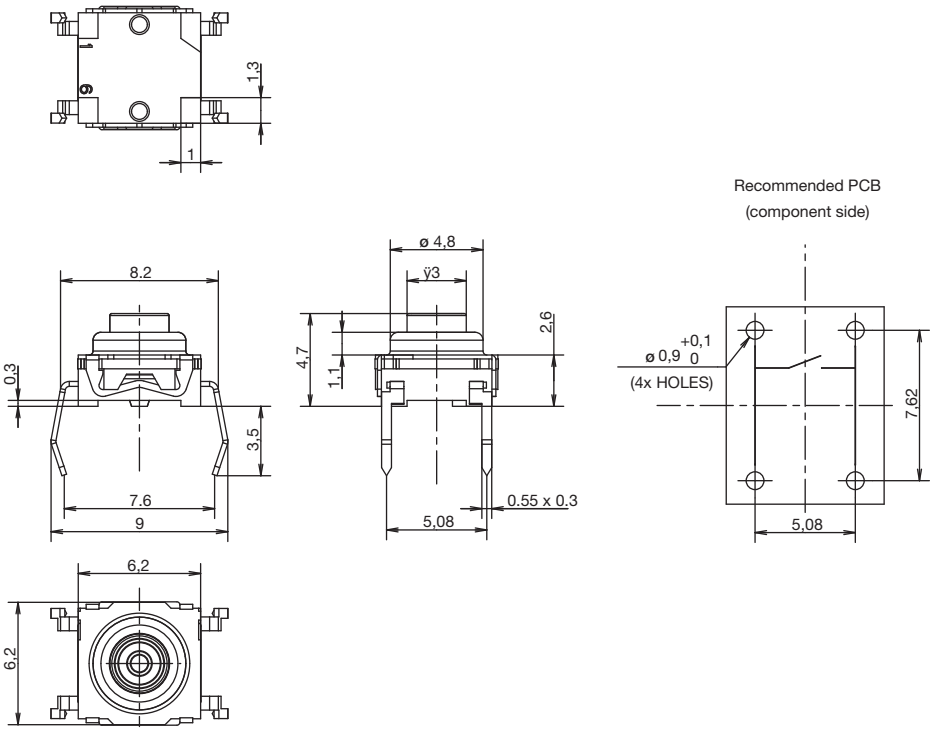

KSA & KSL AUTOMATIC INSERTION

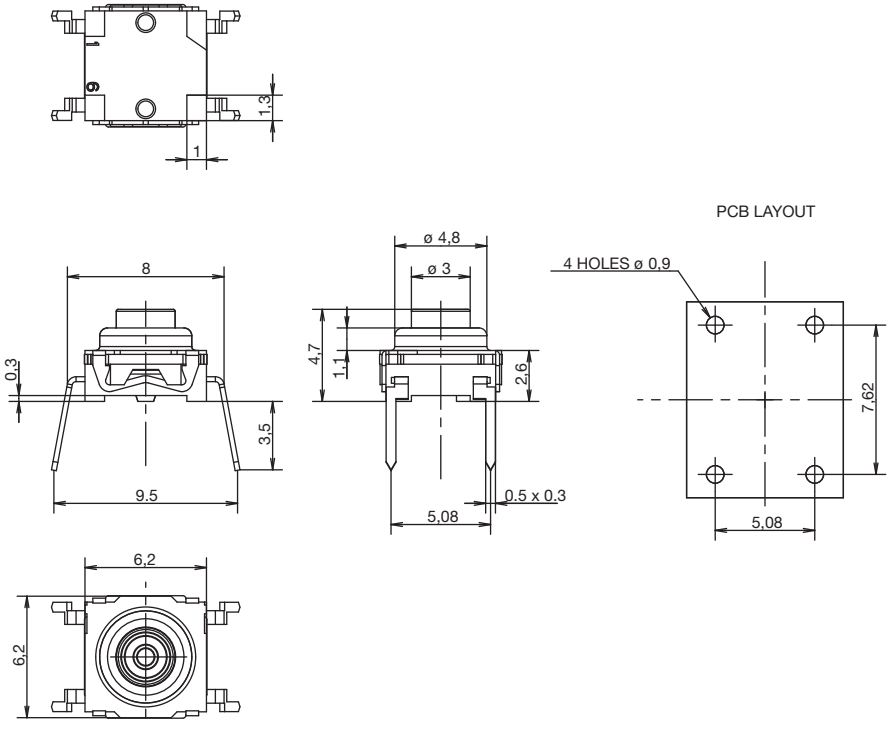

First Angle Projection

Dimensions are shown: mm
Specifications and dimensions subject to change

Features/Benefits

- *Spherical actuator allows actuation force off center ± 30° with regard to vertical*
- *RoHS compliant and compatible*
- *Designed for mechanisms*
- *Compliant side actuation*

Typical Applications

- *Automotive*
- *Cranes, off road, railway*
- *Factory automation*
- *Security systems*

Specification

FUNCTION: Momentary action
CONTACT ARRANGEMENT: 1 make contact = SPST, N.O.
DISTANCE BETWEEN BUTTON CENTERS (min.): 7.62 (0.300)
TERMINALS: PC pins
SEALING: IP60

Mechanical

Type	Actuation force N (grams)	Operating life (operations) axial	Operating life (operations) radial	Travel to make (mm)
KSJ0M21160SH	2 ± 0,5	100,000	30,000	0,6 ± 0,3
KSJ0M41180SH	3,0 ± 0,8	100,000	30,000	0,55 ± 0,25
KSJ0M21180SH	2 ± 0,5	100,000	30,000	0,35 ± 0,2
KSJ0M91180SH	3,9 ± 0,8	100,000	30,000	0,7 ± 0,25

Electrical

	Silver	Gold
MAXIMUM POWER:	1 VA	0.2 VA
MAXIMUM VOLTAGE:	32 VDC	32 VDC
MINIMUM VOLTAGE:	20 mV	20 mV
MAXIMUM CURRENT:	50 mA	10 mA
MINIMUM CURRENT:	1 mA	1 mA

DIELECTRIC STRENGTH (50 Hz, 1 min.): ≥ 250 Vrms
CONTACT RESISTANCE: ≤100m Ω
INSULATION RESISTANCE (100V): ≥ 10^9 ohms
BOUNCE TIME: ≤ 1 ms

Environmental

	Silver	Gold
OPERATING TEMPERATURE:	-40°C to 85°C	-40°C to 125°C
STORAGE TEMPERATURE:	-40°C to 85°C	-55°C to 125°C

Packaging

Delivered in boxes of 250 pieces.

Process

Wave soldering, compatible with lead free soldering profile.

NOTE: Specifications listed above are for switches with standard options.
For information on specific and custom switches, consult Customer Service Center.

This data sheet does not provide enough information for applications which require a certain level of quality or safety such as automotive, medical systems, safety equipment. Please contact your sales representative to get contractual specification package.

* Please contact your C&K represenative for any question regarding the product intergration.

How To Order

Our easy build-a-switch concept allows you to mix and match options to create the switch you need. To order, select desired option from each category and place it in the appropriate box.

However, please note that all the combinations of these options are not feasible.
For any part number different from those listed in the table above, please consult your local represenative.

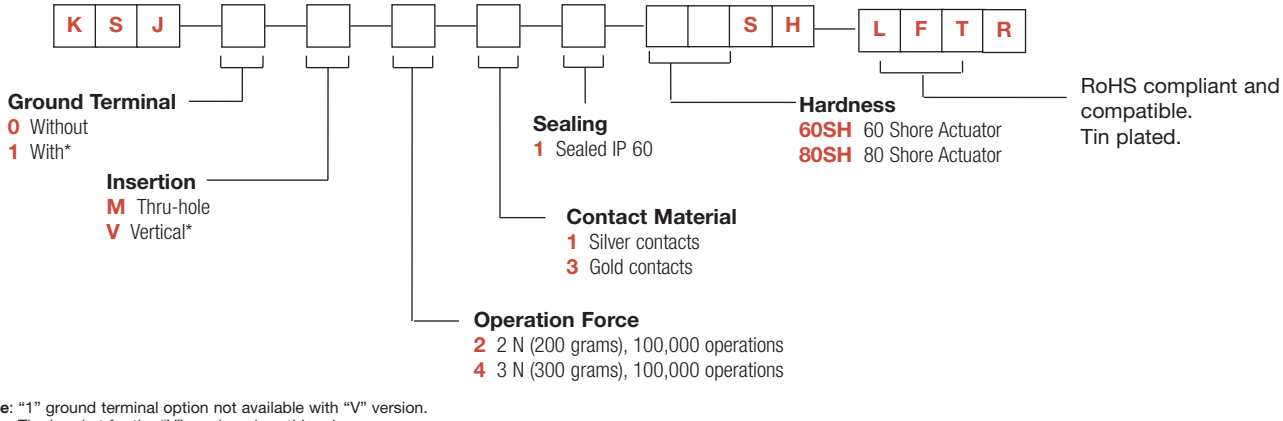

***Note**: "1" ground terminal option not available with "V" version.
The bracket for the "V" version plays this role.

KSJ Series
Spherical Actuator Tact Switches

KSJ

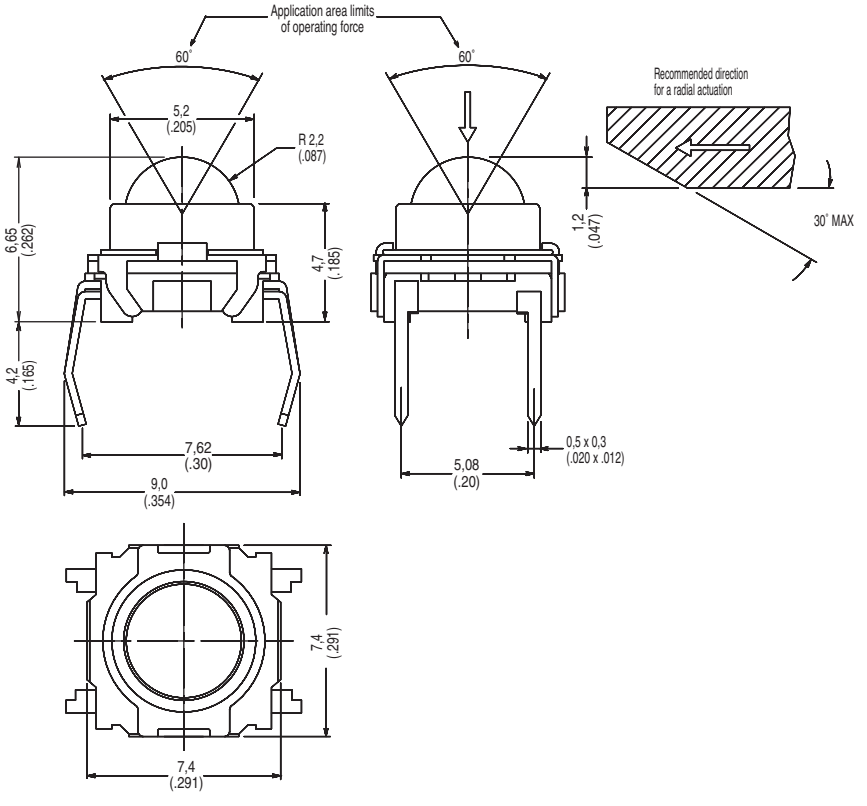

KSJ0M211

INSERTION

M THRU-HOLE

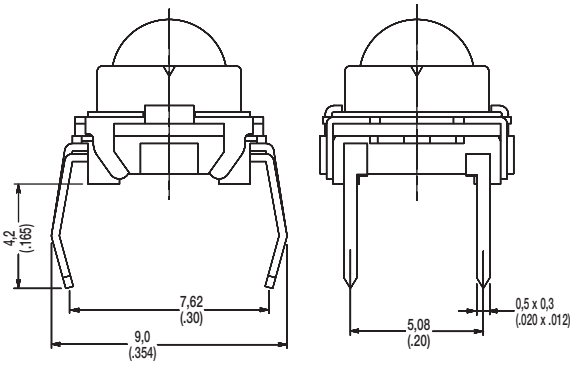

PCB LAYOUT

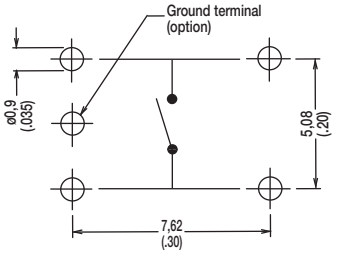

V VERTICAL

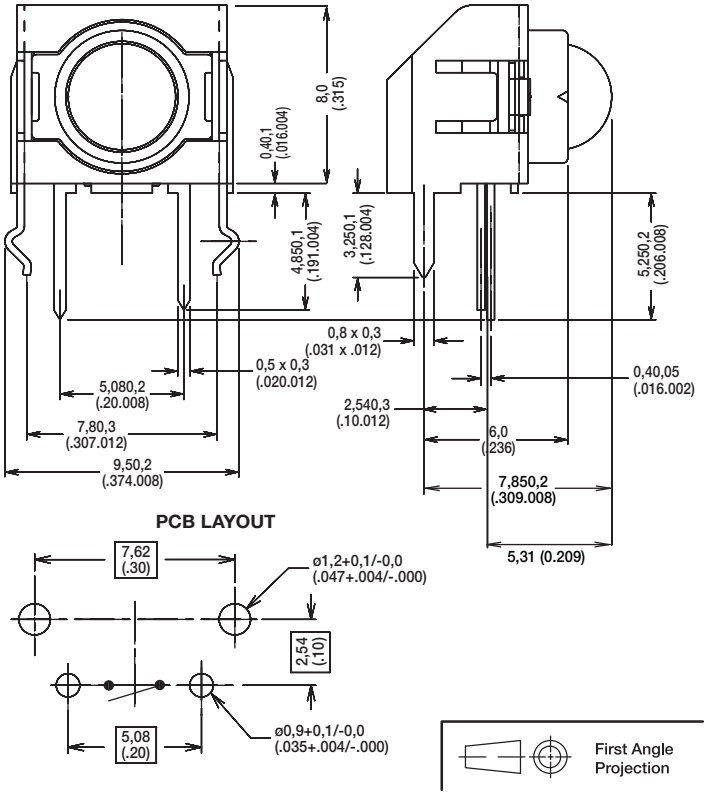

PCB LAYOUT

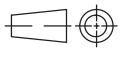

First Angle Projection

Dimensions are shown: mm
Specifications and dimensions subject to change

Features/Benefits

- *Compact size 6 x 3.5 mm*
- *Variety of switch heights*
- *Choice of actuation force*
- *RoHS compliant and compatible*

Typical Applications

- *Consumer products*
- *Instrumentation*
- *Computer products*
- *Industrial*

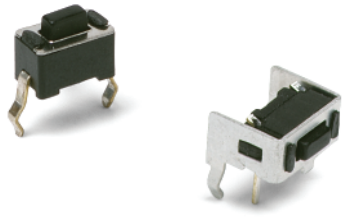

Specification

FUNCTION: Momentary action
CONTACT ARRANGEMENT: SPST, N.O.
TERMINALS: PC pins

Mechanical

ACTUATION FORCE: PTS635L models: 130 grams.
PTS635H models: 200 grams.
LIFE EXPECTANCY: 20,000 operations.

Electrical

CONTACT RATING: 50 mA @ 12 V DC.
DIELECTRIC STRENGTH: 250 V AC min.
CONTACT RESISTANCE: 100 mΩ max. initial.
INSULATION RESISTANCE: 10^{11}Ω min.

Environmental

OPERATING TEMPERATURE: -40˚C to 60˚C

NOTE: Specifications listed above are for switches with standard options.
For information on specific and custom switches, consult Customer Service Center.

Process

SOLDERING: Preheating to 100˚C for 45 sec. max. Keep flux flush with top surface of PCB; do not apply to component side of PCB and area where terminals are located. Soldering to 255˚C for 5 sec. max. Clean by brushing on solder surface. Do not clean switch with solvents.

Materials

BASE: 6/6 nylon or glass filled polyester (PBT) (UL 94V-0).
ACTUATOR: 6/6 nylon or polyacetal (UL 94HB).
COVER PLATE: PTS635S and PTS635V models: Tin plated stainless steel
DOME CONTACTS: Phosphor bronze, silver clad.
STATIONARY CONTACTS: Brass, silver plated.
TERMINALS: Brass, silver plated. Insert molded.

Packaging

Bulk packaging.

Tape & reel for:
PTS635Sx43SMTR, 1700 pcs per reel

How To Order

Our easy build-a-switch concept allows you to mix and match options to create the switch you need. To order, select desired option from each category and place it in the appropriate box.

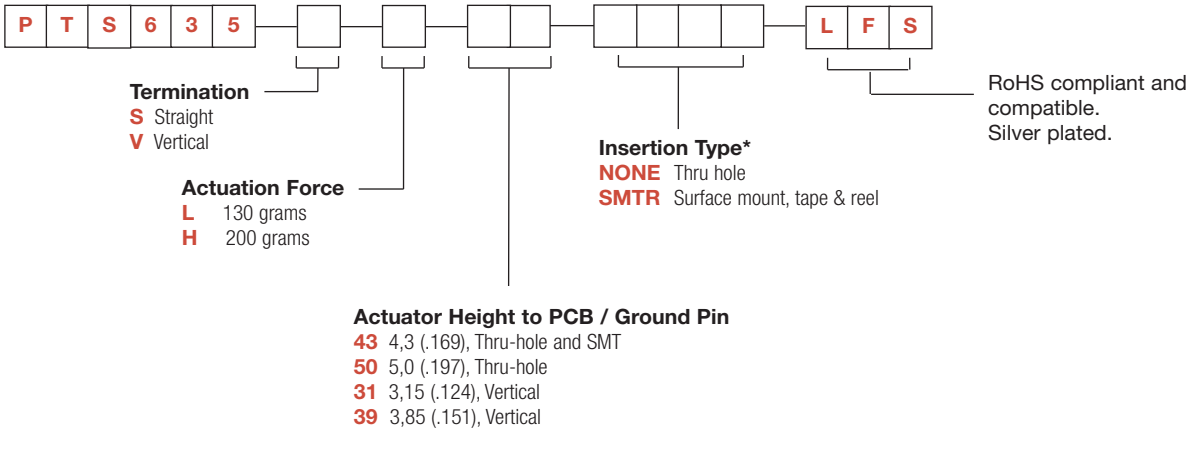

* SMTR only available with PTS635 43 Actuator Height options.

PTS635 Series
3,5 mm Tact Switches

SERIES

PTS635

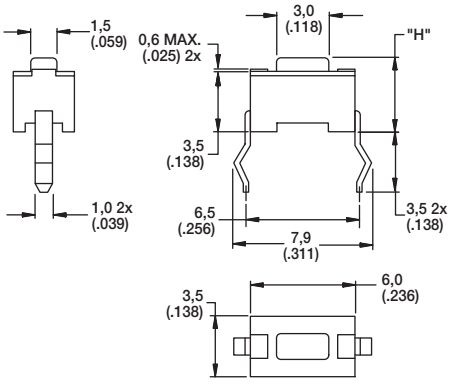

For "H" dimension please refer to chart on next page

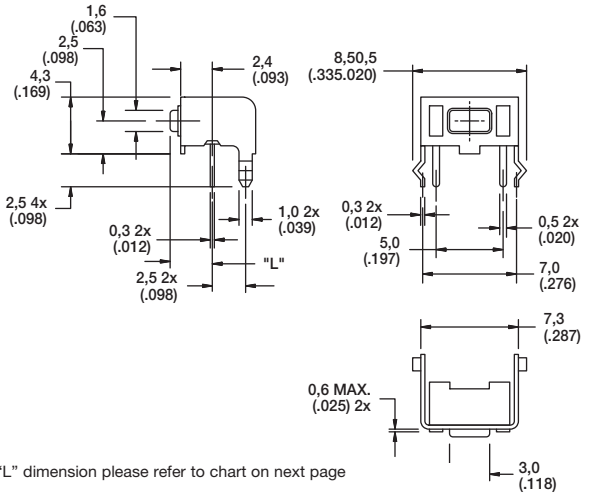

For "L" dimension please refer to chart on next page

TERMINATION

S STRAIGHT

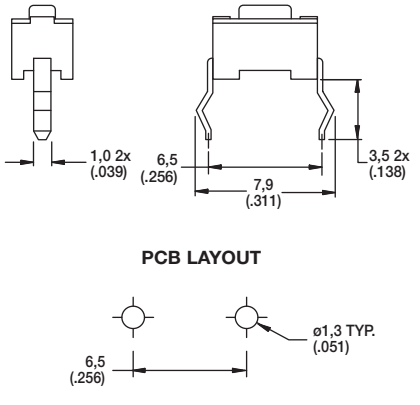

V VERTICAL

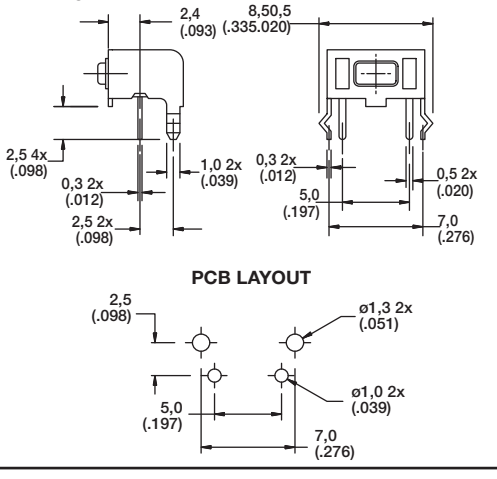

SMT 43

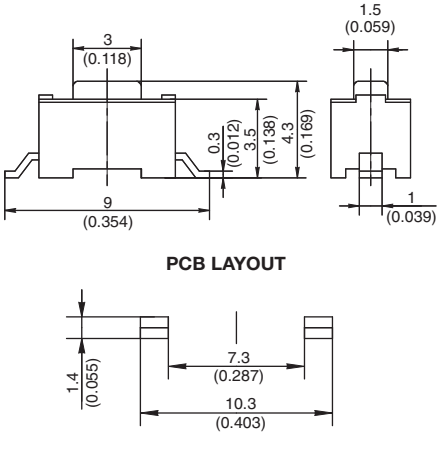

First Angle Projection

Dimensions are shown: mm
Specifications and dimensions subject to change

ACTUATION FORCE

OPTION CODE	FORCE
L	130 grams
H	200 grams

ACTUATOR HEIGHT

OPTION CODE	HEIGHT "H" or LENGTH "L"	TERMINATION	SCHEMATIC
43	4,3 (.169)	Thru-hole & SMT	1 2
50	5,0 (.197)	Thru-hole	
31	3,15 (.124)	Vertical	1 2 3 4
39	3,85 (.151)	Vertical	

INSERTION TYPE

SMTR 43

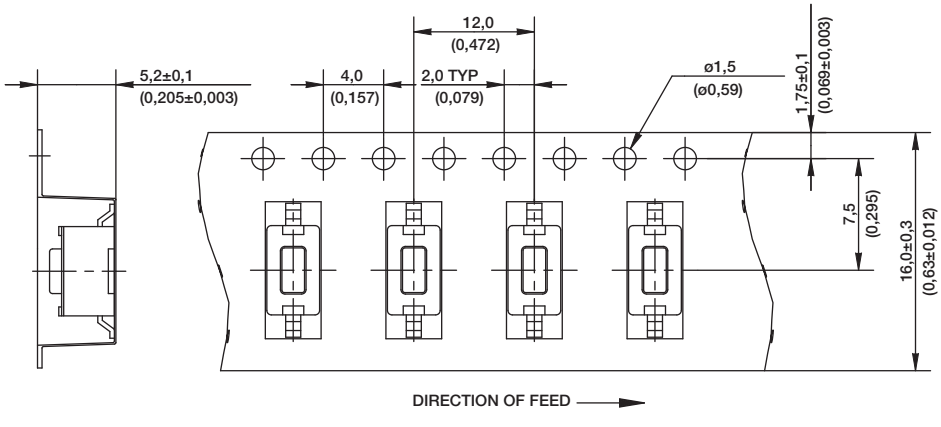

First Angle Projection

Dimensions are shown: mm
Specifications and dimensions subject to change

PTS641 Series
SMT Top Actuated Switches

Features/Benefits

- ***6.3 x 6.3 mm footprint***
- ***Multiple heights***
- ***Ground pin option***

Typical Applications

- ***Metering***
- ***White goods***
-

Specification

FUNCTION: Momentary action
CONTACT ARRANGEMENT: 1 make contact = SPST N.O.
TERMINALS: G type for SMT

Mechanical

TRAVEL:
0.20 mm ±0.15 mm for 160 &250 gf
0.30 mm ±0.15 mm for 320 gf
OPERATING LIFE: 100,000 cycles
OPERATION FORCE:
160 gf ±50 gf blue actuator
250 gf ±50 gf red actuator
320 gf ±80 gf black actuator

Packaging

Switches in reels of 1,500 pieces.
Dimensions of reels according to EIA 481B
External diameter 330 mm

Electrical

MAXIMUM VOLTAGE: 12 VDC
MAXIMUM CURRENT DC: 50 mA
DIELECTRIC STRENGTH: 250 VA C (1mn)
CONTACT RESISTANCE: 100 m Ω
INSULATION RESISTANCE: ≥ 100 M Ω
BOUNCE TIME: < 5 ms

Environmental

OPERATING TEMPERATURE: -20˚C to 85˚C

Process

SOLDERING: This component is suited to the following methods:
Infrared Reflow Soldering in accordance with IEC61760-1

NOTE: Specifications listed above are for switches with standard options.
For information on specific and custom switches, consult Customer Service Center.