Snap-In Enclsoures

Features:

- Light grey and black colours are available for selection
- Snap-in design can be opened and closed easily without the tool
- Rubber of the cable entry can be cut by knife easily for the cable connection
- 4 PCS of internal bosses are available for pcb assembly
- Ideally use for indoor / outdoor telecommunication device

Specifications:

Enclosure Material	: ABS
External Height - Imperial	: 1.77"
External Height - Metric	: 45mm
External Width - Imperial	: 3.58"
External Width - Metric	: 91mm
External Depth - Imperial	: 3.11"
External Depth - Metric	: 79mm

GH001G;GH001B

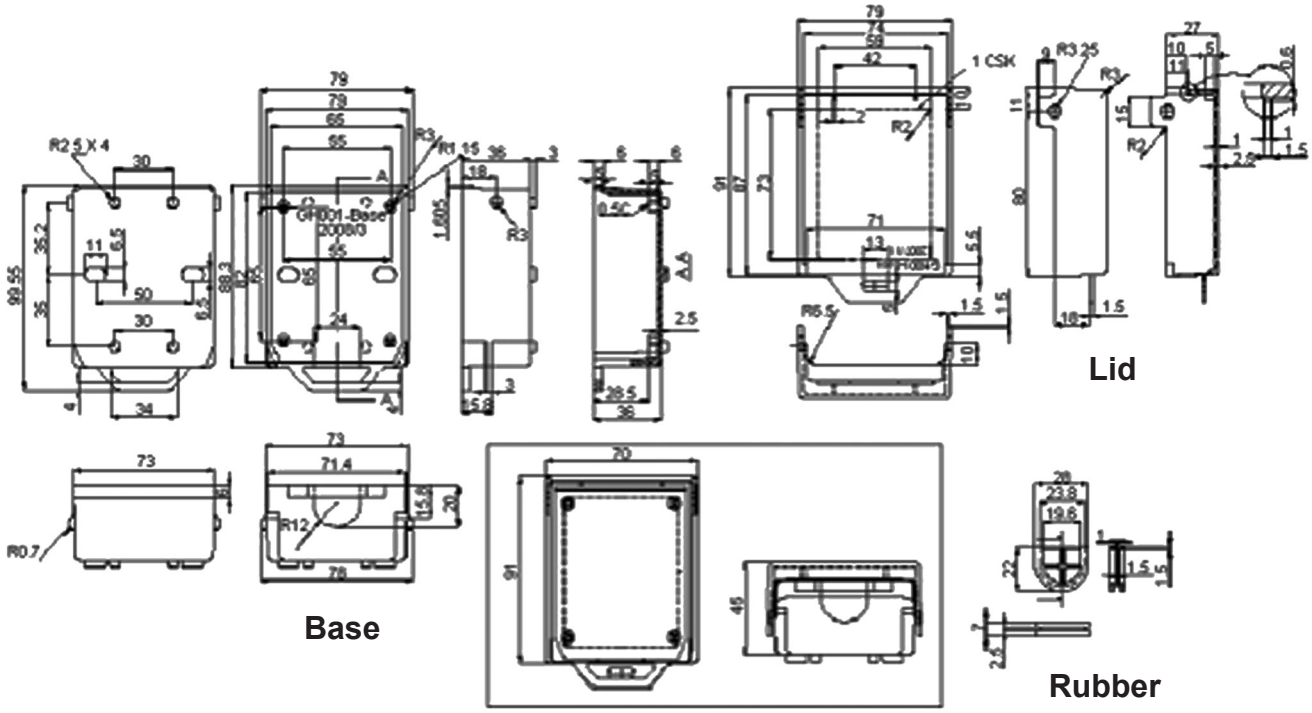

Dimensions : Millimetres

GH002G;GH002B

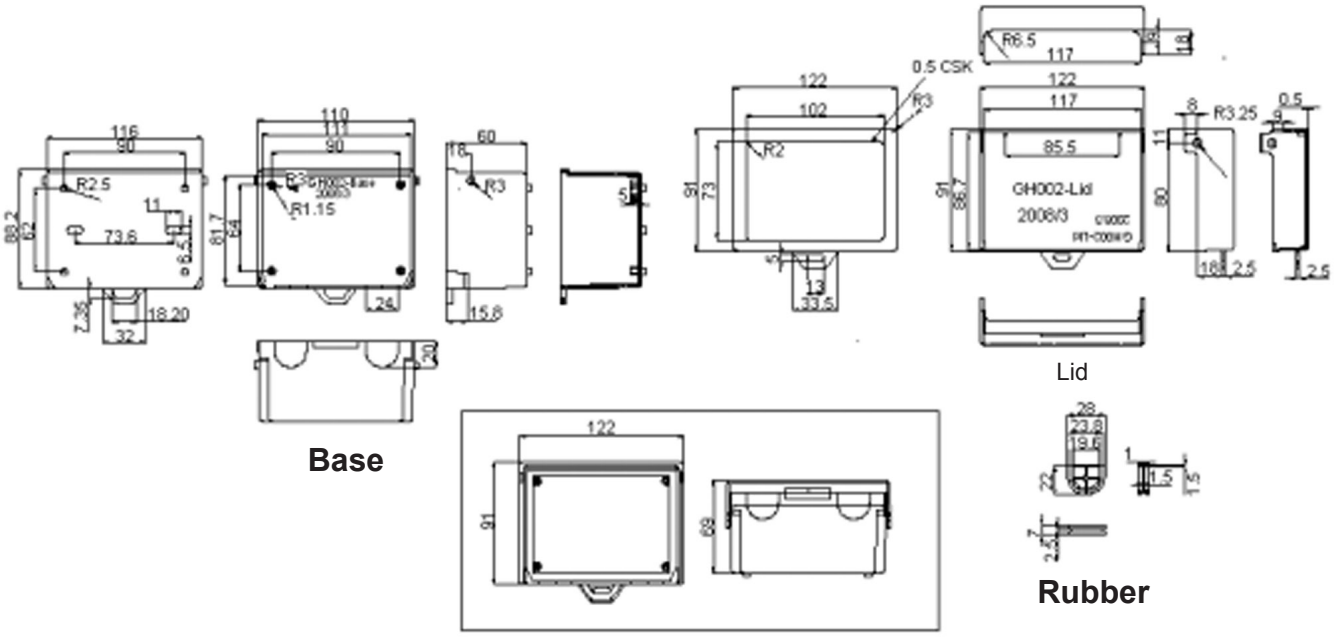

Dimensions : Millimetres

Part Number Table

Description	Cable Entry	External Dimension (mm)			Part Number
		Length	Width	Height	
Box, ABS, 45mm × 79mm × 91mm, GRY	1 Way	91	79	45	GH001G
Box, ABS, 45mm × 79mm × 91mm, BLK					GH001B
Box, ABS, 69mm × 122mm × 91mm, GRY	2 Way		122	69	GH002G
Box, ABS, 69mm × 122mm × 91mm, BLK					GH002B

Important Notice : This data sheet and its contents (the "Information") belong to the members of the Premier Farnell group of companies (the "Group") or are licensed to it. No licence is granted for the use of it other than for information purposes in connection with the products to which it relates. No licence of any intellectual property rights is granted. The Information is subject to change without notice and replaces all data sheets previously supplied. The Information supplied is believed to be accurate but the Group assumes no responsibility for its accuracy or completeness, any error in or omission from it or for any use made of it. Users of this data sheet should check for themselves the Information and the suitability of the products for their purpose and not make any assumptions based on information included or omitted. Liability for loss or damage resulting from any reliance on the Information or use of it (including liability resulting from negligence or where the Group was aware of the possibility of such loss or damage arising) is excluded. This will not operate to limit or restrict the Group's liability for death or personal injury resulting from its negligence. Multicomp is the registered trademark of the Group. © Premier Farnell plc 2012.