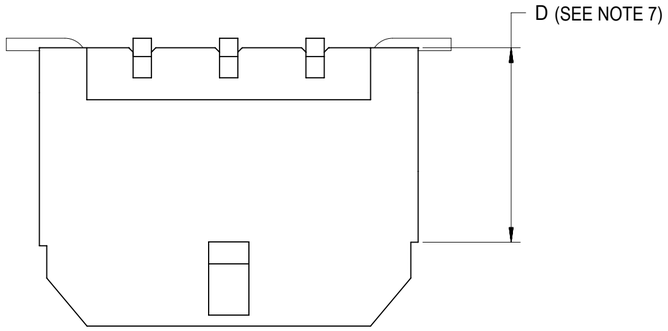

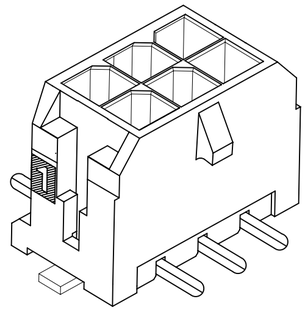

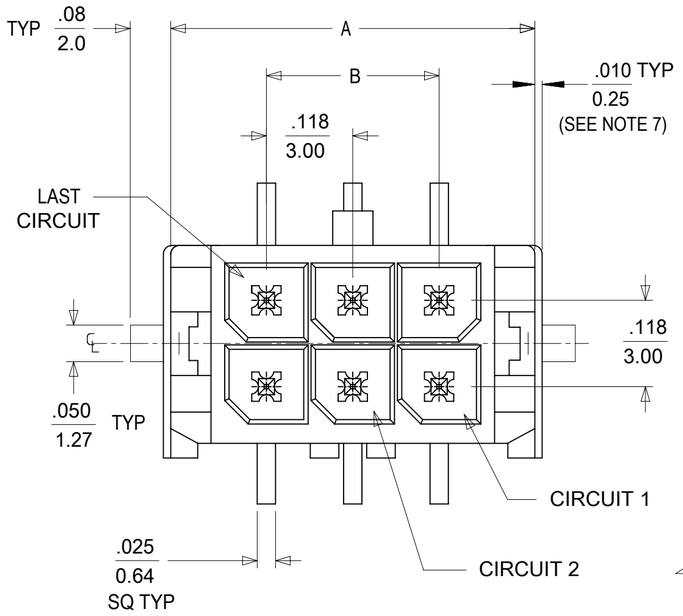

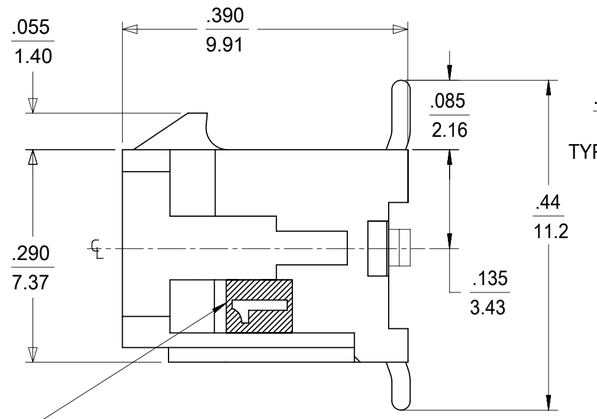

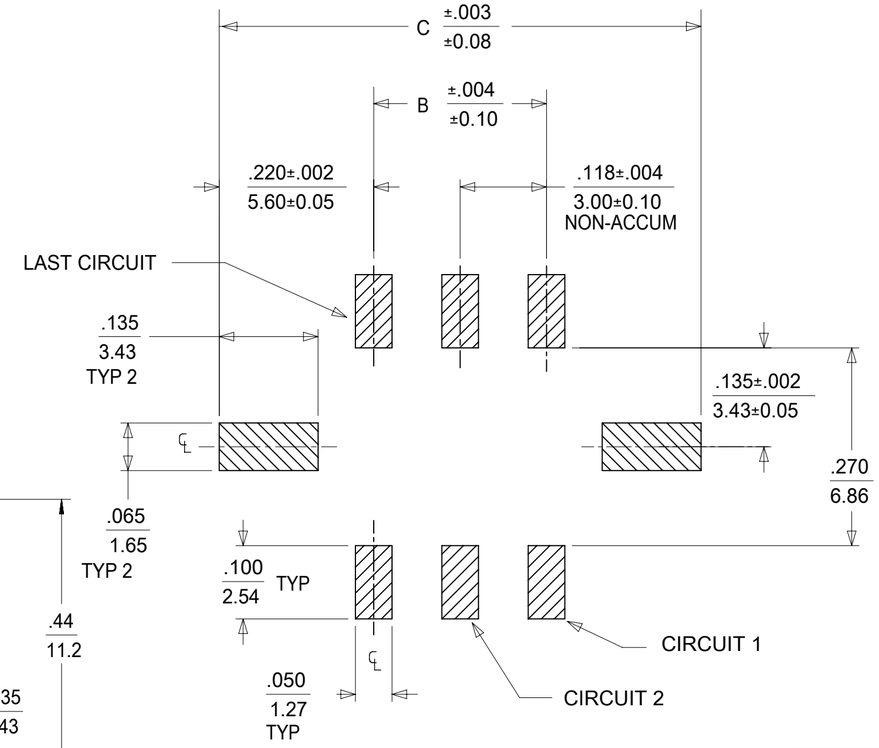

PCB LAYOUT: COMPONENT SIDE

CKTS	A	B	C
02	.262 / 6.65	NA	.441 / 11.20
04	.380 / 9.65	.118 / 3.00	.559 / 14.20
06	.498 / 12.65	.236 / 6.00	.677 / 17.20
08	.616 / 15.65	.354 / 9.00	.795 / 20.20
10	.734 / 18.65	.472 / 12.00	.913 / 23.20
12	.852 / 21.65	.591 / 15.00	1.031 / 26.20
14	.970 / 24.65	.709 / 18.00	1.150 / 29.20
16	1.088 / 27.65	.827 / 21.00	1.268 / 32.20
18	1.206 / 30.65	.945 / 24.00	1.386 / 35.20
20	1.325 / 33.65	1.063 / 27.00	1.504 / 38.20
22	1.443 / 36.65	1.181 / 30.00	1.622 / 41.20
24	1.561 / 39.65	1.299 / 33.00	1.740 / 44.20

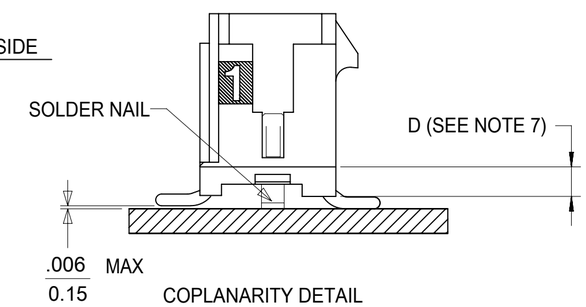

COPLANARITY DETAIL

SEE NOTE #6

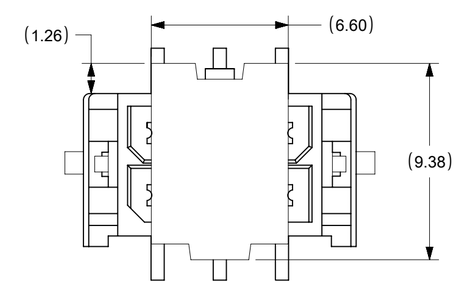

SHOWN WITH DISPOSABLE CAP
(FOR REMOVAL FROM TAPE & REEL PACKAGING)
SEE NOTE #4

NOTES:

1. HOUSING MATERIAL: GLASS FILLED LIQUID CRYSTAL POLYMER
   UL94V-0, COLOR: BLACK
   TERMINAL MATERIAL: BRASS ALLOY
2. FINISH: A = .000060/(0.00152) MIN. REFLOWED MATTE TIN OVER .000050/(0.00127) MIN. NICKEL PLATE. (FINISH IS BRIGHT IN APPEARANCE, THICKNESS AS APPLIED PRIOR TO REFLOW)
   B = .000015/(0.00038) MIN. SELECT GOLD IN CONTACT AREA; .000100/(0.00254) MIN. SELECT MATTE TIN ON SOLDER TAILS; BOTH OVER .000050/(0.00127) MIN. NICKEL PLATE.
   C = .000030/(0.00076) MIN. SELECT GOLD IN CONTACT AREA; .000100/(0.00254) MIN. SELECT MATTE TIN ON SOLDER TAILS; BOTH OVER .000050/(0.00127) MIN. NICKEL PLATE.
   D = .000100/(0.00254) MIN. MATTE TIN OVER .000050/(0.00127) MIN. NICKEL PLATE.
3. PRODUCT SPECIFICATION: PS-43045
4. TAPE AND REEL PACK : SEE MOLEX DRAWING 430450002-PK
5. MATES WITH MICRO FIT (3.0) RECEPTACLE SERIES 43025
6. THE COPLANARITY DIMENSION IS ESTABLISHED BY PLACING THE ASSEMBLY ON A FLAT SURFACE. THE DISTANCE FROM THAT SURFACE TO THE BOTTOM OF ANY TERMINAL OR SOLDER NAIL MUST NOT EXCEED .006/0.15
7. CIRCUIT SIZES 2-6: "D" IS 0.265/6.74 FOR .010/0.25 STEP.
   CIRCUIT SIZES 8-24: "D" IS .063/1.60 FOR .010/0.25 STEP.
8. THIS PART CONFORMS TO CLASS B REQUIREMENTS OF COSMETIC SPECIFICATION PS-45499-002.
9. TEXT ON PART IS FOR REFERENCE ONLY. TEXT AND TEXT LOCATION MAY VARY DEPENDING ON PART NUMBER AND/OR TOOL.

	FINISH A	FINISH B	FINISH C	FINISH D
CKTS	MATERIAL NO:	MATERIAL NO:	MATERIAL NO:	MATERIAL NO:
02	43045-0218	43045-0219	43045-0220	43045-0118
04	43045-0418	43045-0419	43045-0420	43045-0318
06	43045-0618	43045-0619	43045-0620	43045-0518
08	43045-0818	43045-0819	43045-0820	43045-0718
10	43045-1018	43045-1019	43045-1020	43045-0918
12	43045-1218	43045-1219	43045-1220	43045-1118
14	43045-1418	43045-1419	43045-1420	43045-1318
16	43045-1618	43045-1619	43045-1620	43045-1518
18	43045-1818	43045-1819	43045-1820	43045-1718
20	43045-2018	43045-2019	43045-2020	43045-1918
22	43045-2218	43045-2219	43045-2220	43045-2118
24	43045-2418	43045-2419	43045-2420	43045-2318

THIS DRAWING CONTAINS INFORMATION THAT IS PROPRIETARY TO MOLEX ELECTRONIC TECHNOLOGIES, LLC AND SHOULD NOT BE USED WITHOUT WRITTEN PERMISSION

DIMENSION UNITS	SCALE
mm	NTS

GENERAL TOLERANCES (UNLESS SPECIFIED)

	MM	INCH
4 PLACES	±	±
3 PLACES	±	± 0.01
2 PLACES	± 0.25	± 0.014
1 PLACE	± 0.36	±
0 PLACES	±	±
ANGULAR TOL	± 0.5 °	

DRAFT WHERE APPLICABLE MUST REMAIN WITHIN DIMENSIONS

CURRENT REV DESC:

EC NO: 744175
DRWN: ZIXUAQ 2023/03/27
CHK'D: XQZHANG 2023/03/30
APPR: XQZHANG 2023/03/30

INITIAL REVISION:
DRWN: SAMIEC 2000/03/15
APPR: EDGLEY 2000/03/15

THIRD ANGLE PROJECTION | DRAWING: C-SIZE | SERIES: 43045

molex

MICRO FIT (3.0) VERTICAL SMT, NAILS
DUAL ROW HEADER

PRODUCT CUSTOMER DRAWING

DOCUMENT NUMBER	DOC TYPE	DOC PART	REVISION
SD-43045-007	PSD	001	G5

MATERIAL NUMBER	CUSTOMER	SHEET NUMBER
SEE CHART	GENERAL MARKET	1 OF 1

DOCUMENT STATUS	P1	RELEASE DATE	2023/03/30 08:57:07

FORMAT: Eng-tega-master-tb-prod-C
REVISION: E1
DATE: 2021/05/01