© COPYRIGHT. THIS DRAWING HAS COPYRIGHT AND MAY NOT BE COPIED IN WHOLE OR IN PART OR USED FOR ANY PURPOSE OTHER THAN FOR WHICH IT IS SUPPLIED WITHOUT EXPRESS WRITTEN CONSENT OF YAZAKI EUROPE LIMITED.

WIRE SIZE (mm²)	PART NUMBER	APPLICATION	D1	E1	F1	I	MASS (g)	PLATING	PLATING MARK	MATERIAL TERMINAL BODY	MATERIAL SPRING
10	~~7116-5626-02~~	SEALED	4.50	9.50	8.30	1.95	4.34	tin-silver (NOTE 7.1)	S	CuNiSi THICKNESS: 0.8 mm	X 10 CrNi 18 8 THICKNESS 0.3 mm
	7116-5626-06							silver (NOTE 7.2)	L		
10-16	7116-5625-02	SEALED UNSEALED	4.50	9.50	8.30	1.95	4.90	tin-silver (NOTE 7.1)	S		
	7116-5625-06		4.50	9.50	8.30	1.95		silver (NOTE 7.2)	L		
8	7196-1522-02	SEALED	3.50	8.40	7.00	1.80	4.05	tin-silver (NOTE 7.1)	S		
4-6	7116-7473-02	SEALED	2.75	6.75	5.80	1.70	4.20	tin-silver (NOTE 7.1)	S		
	7116-7473-06		2.75	6.75	5.80	1.70		silver (NOTE 7.2)	L		
	7116-7570-02	UNSEALED	2.75	6.75	5.80	0.50	3.36	tin-silver (NOTE 7.1)	S		
	7116-7570-06		2.75	6.75	5.80	0.50		silver (NOTE 7.2)	L		

7116-5625-02 / 7116-5625-06 / 7116-7473-02 / 7116-7473-06 / 7196-1522-02

INSULATION DIAMETER (mm)	WIRE SIZE (mm²)	APPLICABLE SWS
7.3-8.3	16	7158-3673-90
6.2-7.3	16	7158-3672-50
5.4-6.5	10	7158-3713-70
5.0-5.8	8	7158-3713-70
3.4-4.3	4-6	7172-5184

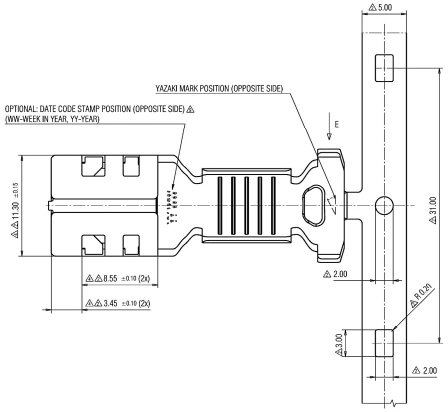

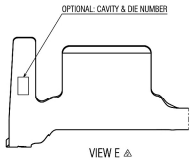

VIEW E

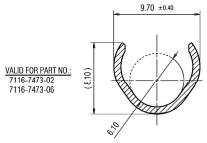

SECTION B-B

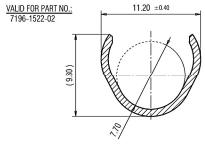

SECTION B-B

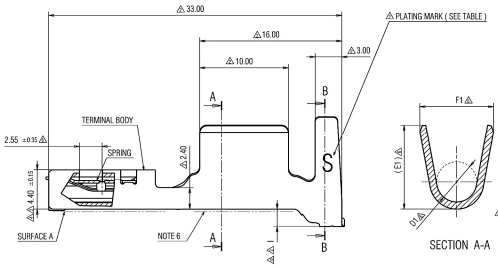

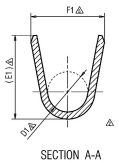

SECTION A-A

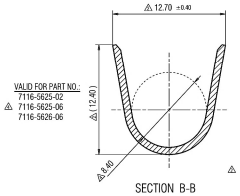

SECTION B-B

~~7116-5626-02~~ / 7116-5626-06

INSULATION DIAMETER (mm)	WIRE SIZE (mm²)	APPLICABLE SWS
3.4-6.0	10	7158-3268-70

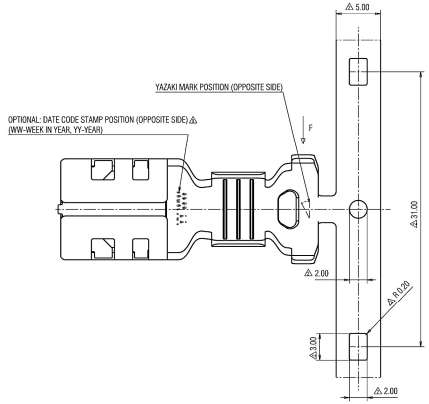

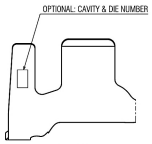

VIEW F

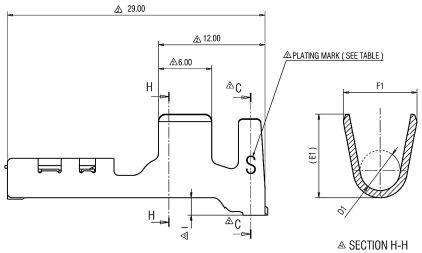

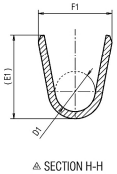

SECTION H-H

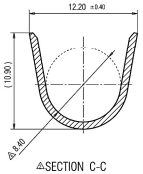

SECTION C-C

7116-7570-02 / 7116-7570-06

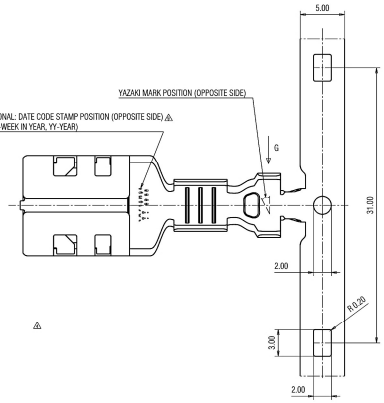

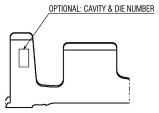

VIEW G

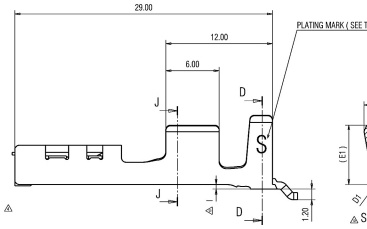

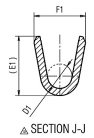

SECTION J-J

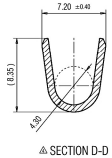

SECTION D-D

NOTES:
1. MATERIAL: SEE TABLE;
2. MATING MALE TERMINAL ACCORDING DRAWING 7114-5623-02:R;
3. FOR GENERAL DIMENSIONAL AND POSITIONAL TOLERANCE SEE GENERAL TOLERANCE TABLE;
4. HANDLING MANUAL: YPES-15-969E;
5. PRODUCT STANDARD: YPES-11-98-148E;
6. IN THIS AREA AFTER CRIMPING MAX. ALLOWED STEP IS 0.30 REFERRED TO THE SURFACE A;
7. PLATING:
   7.1. 1-3 μm TIN-SILVER
   7.2. 1-2 μm SILVER OVER 1-2 μm NICKEL UNDERLAYER.
   AFTER PLATING: TARNISH RESISTANCE AND FRICTION REDUCTION POST TREATMENT.
8. THE MATERIALS USED IN THIS PRODUCT ARE IN CONFORMITY WITH REQUIREMENTS OF EU ELV 2000/53/EC DIRECTIVE AND ASSOCIATED DOCUMENTS
9. PRINTED COPIES ARE UNCONTROLLED. THEY ARE POTENTIALLY OUT-OF-DATE AND INVALID. DATABASE IS MASTER.

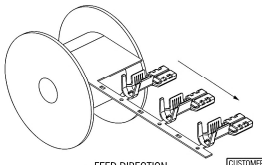

FEED DIRECTION
(SCALE 1:1)

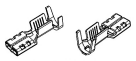

ISOMETRIC VIEW
(SCALE 1:1)

LEI	DATE	REVISION RECORD	NO.	CHKD
	08.01.2021.	ADDED PART NO.	Y21-0012	A.B.
	30.04.2019.	ADDED PART NO. FOR 8 mm²	Y19-0418	I.J.
	21.11.2018.	ADDED MARKING	Y18-0970	I.J.
	29.05.2018.	ADDED PART NO. NWP	Y18-0472	I.J.
	21.07.2015.	PLATING UPDATE	Y15-0353	J.J.
	11.04.2013.	UPDATED CRIMP DATA	Y13-0207	J.J.
	21.02.2013.	UPDATED CRIMP DATA	Y13-0101	J.J.
	08.11.2012.	ADDED PART NO., ETC.	Y12-0839	J.J.
	16.09.2008.	CHANGED SWS AND CRIMP DATA	Y08-0146	V.B.
	10.07.2008.	CHANGED CRIMP DATA AND TOLERANCES	Y08-0030	V.B.
	27.06.2007.	CHANGED TABLE	C07-0719	V.B.
	03.11.2006.	NEW	Q06-0789	V.B.

PRINTED COPIES ARE UNCONTROLLED. THEY ARE POTENTIALLY OUT-OF-DATE AND INVALID. DATABASE IS MASTER.

GENERAL TOLERANCE

	10MAX	50MAX	100MAX	250MAX	2500VR	ANGLE	ECCENT
A	±0.15	±0.2	±0.3	±0.5	±0.75	±30'	0.1
B	±0.2	±0.3	±0.55	±0.95	±1.4	±30'	0.1
C	±0.3	±0.5	±0.8	±1.4	±2	±30'	0.15
SPECIFIED							

MASS: SEE TABLE

CUSTOMER:					
CUSTOMER PART NO.		CUSTOMER DWG NO.			
OFFICE: YEL-K		TRIAL PART NO.			
VENDOR					
VENDOR NO.					
DWG TYPE	DWG SOURCE	DWG DATE	UNIT	SCL	ANGLE
B	NEW	11.10.2006.	mm	5/1	3
APPROVED	CHECKED	CHECKED	DESIGN	DRAWN	
G.GREGURIĆ	J.JAKOPLIĆ	A.BUCEVIĆ	J.JELAK	A. BUCEVIĆ	
	11.01.2021.	11.01.2021.	08.01.2021.	11.10.2006.	08.01.2021.

MATL. SPEC: SEE NOTES | TREAT. & FIN.: SEE NOTES

NAME: 9.5 mm CONTACT SYSTEM (YPT) FEMALE TERMINAL

PART NO.: 7116-5625-02 ETC.

CH. CODE

DWG NO.: 7116-5625-02:R | SPT DWG NO.

YAZAKI

ISSUE MARK

A0