TABLE 1

SUB ASSEMBLY PART NO. AND CH. CODE	NO.	PART NO. AND CH. CODE	MATERIAL	COLOR	QTY.
7283-1407 ETC.	①	SEE TABLE 2	PBT	SEE TABLE 2	1
	②	7157-6504	PBT	NATURAL	1
	③	7137-2660-80	SILICONE RUBBER	BROWN	1

△2 TABLE 2

SUB ASSEMBLY PART NO. AND CH. CODE	PART NO. AND CH. CODE	COLOR
7283-1407. D	7183-1407	NATURAL
7283-1407-10. D	7183-1407-10	DARK GRAY
7283-1407-30. D	7183-1407-30	BLACK
7283-1407-40. D	7183-1407-40	LIGHT GRAY

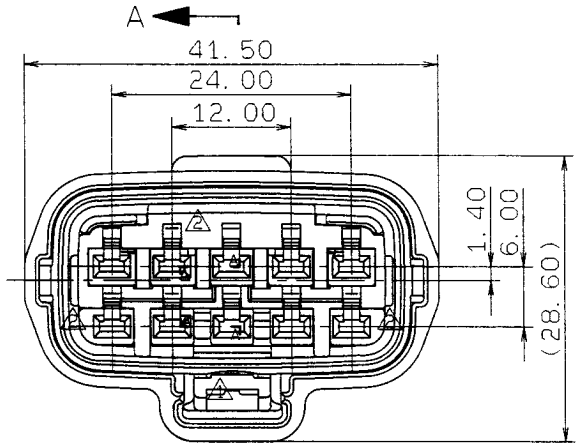

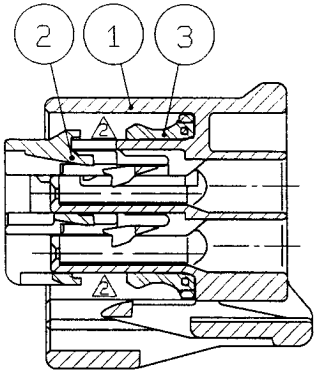

SEC. A-A

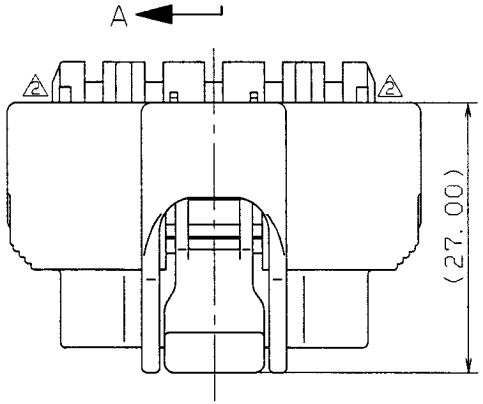

注記

1. 適用端子品番 : 7116-4025 ETC.

NOTE

1. APPLICABLE TERMINAL NO.
: 7116-4025 ETC.

ISSUE MARK

LET	DATE	REVISION RECORD	NO.	CHKD
△2	99. 03. 26	CHANGED FORM ETC., D	C99-L493	C. T
△1	97. 05. 08	CHANGED FORM. B	C97-L767	H. K
	95. 11. 13	NEW. A	C95-M446	K. O

GENERAL TOLERANCE

	10MAX	50MAX	100MAX	250MAX	2500VR	ANGLE	ECCENT
A	±0. 15	±0. 2	±0. 3	±0. 5	±0. 75	±30′	0. 1
B	±0. 2	±0. 3	±0. 55	±0. 95	±1. 4	±30′	0. 1
Ⓒ	±0. 3	±0. 5	±0. 8	±1. 4	±2	±30′	0. 15

SPECIFIED

MASS g

CUSTOMER

CUSTOMER PART NO. | CUSTOMER DWG NO.

OFFICE | TRIAL PART NO.

VENDOR

VENDOR NO.

DWG TYPE	DWG SOURCE	DWG DATE	UNIT	SCL	ANGLE
R	NEW	95. 10. 23	mm	2/1	3

APPROVED	CHECKED	CHECKED	DESIGN	DRAWN
加藤	山梨	鳥居	AKAHORI	HATORI 杉山じ
'99. 04. 15	'99. 04. 05	99. 04. 01	93. 03. 15	99. 03. 26

MATL. SPEC. SEE TABLE 1 | TREAT. & FIN.

NAME 090Ⅱ 10P SEALED CONNECTOR HOUSING FEMALE SUB ASSEMBLY

PART NO. CH. CODE 7283-1407 ETC.

DWG NO. 7283-1407:R | SET DWG NO.

YAZAKI CORPORATION