YAZAKI PART NO. AND CH. CODE	MATERIAL	COLOR
7123-5014, B	PA66	5 WHITE
7123-5014-30, B	PA66	BLACK
1 7123-5014-90, B	PA66	BLUE

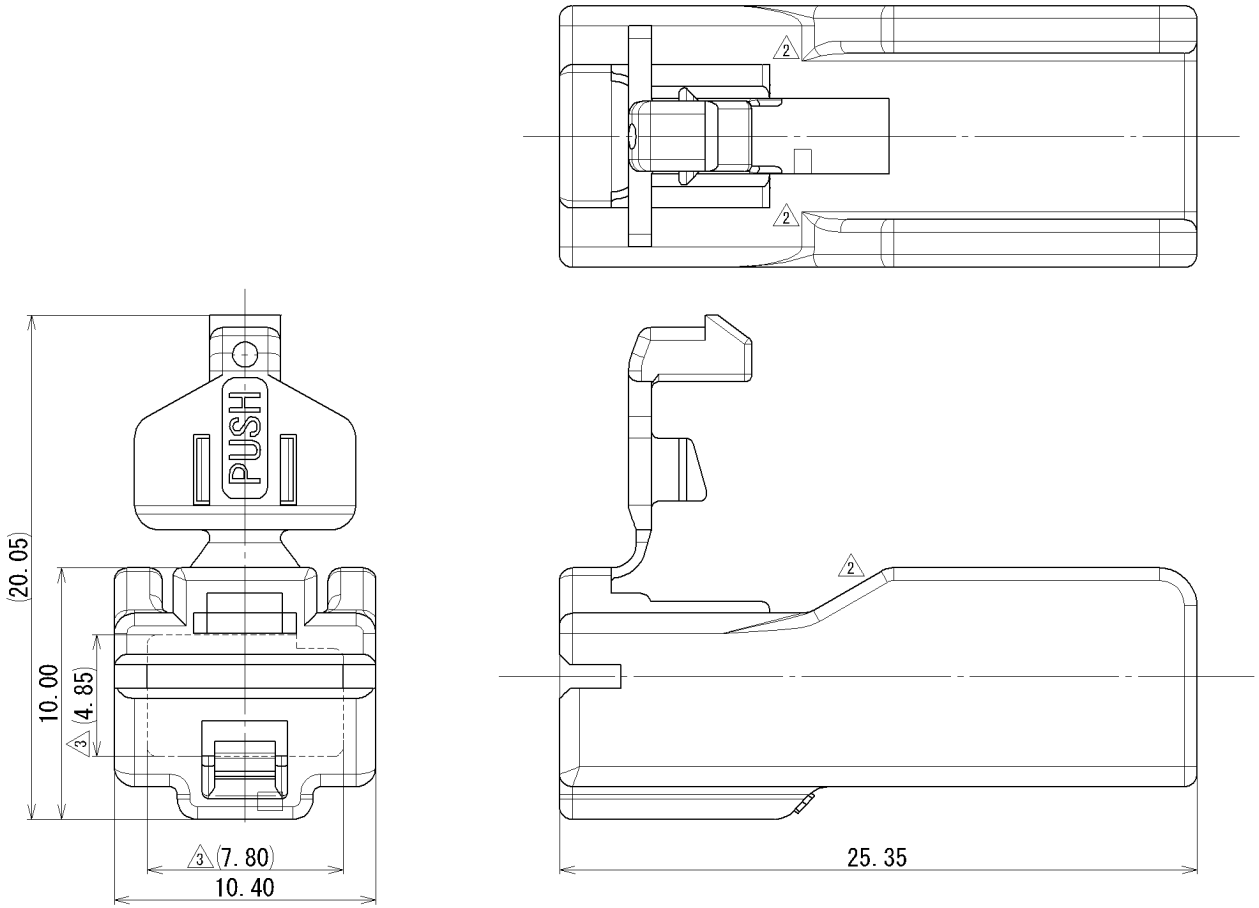

NOTE

1. APPLICABLE TERMINAL PART NO.:7116-2951 ETC.
4 7116-2954 ETC.

注記

1. 適用端子品番 : 7116-2951 ETC.
4 7116-2954 ETC.

5	2013/06/07	CHANGED COLOR ETC.	C13-Z270	E.O
4	2002/07/15	ADDED PART NO.	C02-X781	S.K
3	1999/04/05	CHANGED FORM, B	C99-L419	M.S
2	1995/03/20	CHANGED FORM, A	C95-L482	T.S
1	1993/02/24	ADDED COLOR NO.	C93-6249	A.H
	1991/05/10	NEW	C91-6737	S.I
LET	DATE	REVISION RECORD	NO.	CHKD

ISSUE MARK

GENERAL TOLERANCE

	10MAX	50MAX	100MAX	250MAX	2500VR	ANGLE	ECCENT
A	±0.15	±0.2	±0.3	±0.5	±0.75	±30'	0.1
B	±0.2	±0.3	±0.55	±0.95	±1.4	±30'	0.1
C	±0.3	±0.5	±0.8	±1.4	±2	±30'	0.15

SPECIFIED

MASS

CUSTOMER	
CUSTOMER PART NO.	CUSTOMER DWG NO.
OFFICE	TRIAL PART NO.
VENDOR	
VENDOR NO.	

DWG TYPE	DWG SOURCE	DWG DATE	UNIT	SCL	ANGLE
R	NEW	1991/05/10	mm	5:1	3

APPROVED	CHECKED	CHECKED	DESIGN	DRAWN
K. SUZUKI	Y. IWAHORI	N. TAKASHIMA	KAMEYAMA	E. ORLANI
2013/06/07	2013/06/07	2013/06/07	1991/05/16	2013/06/07

MATL. SPEC. SEE TABLE

TREAT. & FIN.

NAME 5 250 SEL 1P HOUSING FEMALE

PART NO. CH. CODE 7123-5014 ETC.

DWG NO. 7123-5014:R

SET DWG NO.

YAZAKI CORPORATION