REV.	ECN NUMBER	DESCRIPTION	DRAWING	DATE

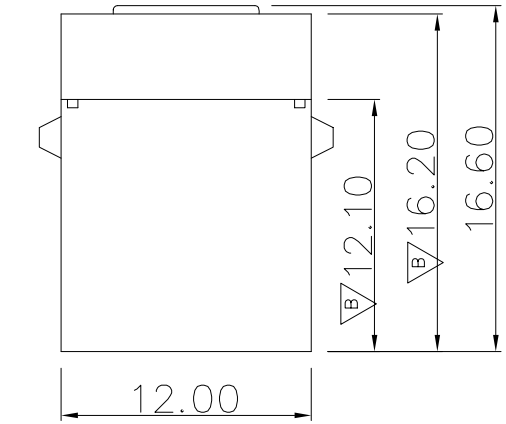

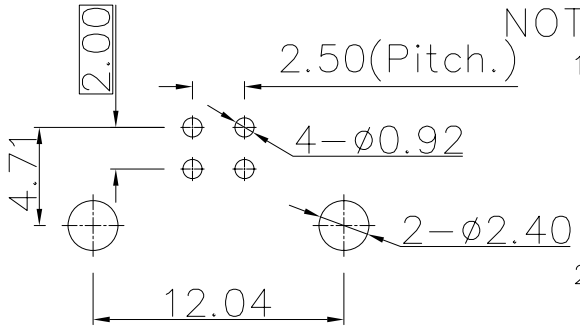

RECOMMEND PCB LAYOUT(±0.05)

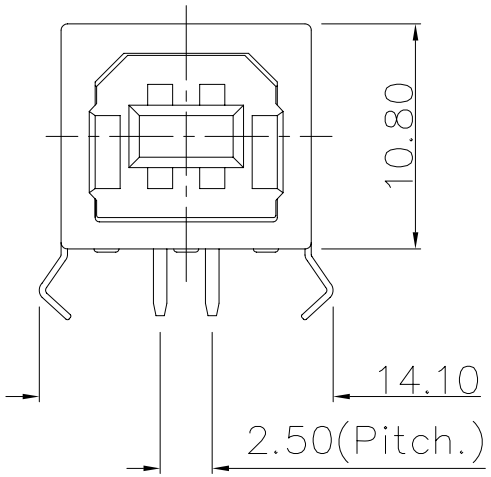

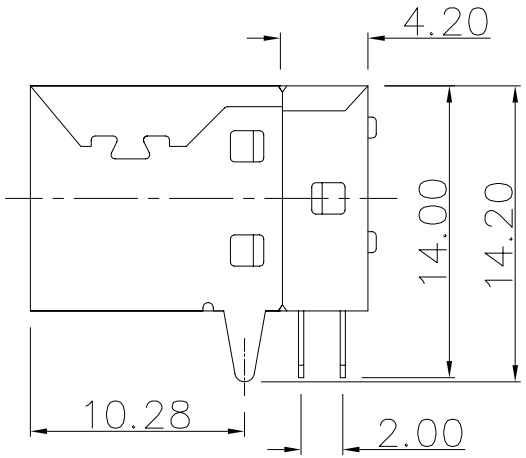

NOTES:

1. MATERIAL:
   1.1 HOUSING: HIGH-THERMOPLASTIC, UL94V-0, COLOR: BLACK OR WHITE
   1.2 FEMALE TERMINAL: COPPY ALLOY
   1.3 MALE TERMIANL: COPPY ALLOY
   1.4 SHELL: COPPY ALLOY Or SPCC
2. FINISHING
   2.1 TERMINAL: CONTACT AREA GOLD FLASH PLATING ON SOLDERTAILS.
   2.2 SHELL: 50μ" MIN.NICKEL UNDER, 50μ" MATTE TIN OVER ALL.
3. ELECTRICAL CHARACTERISITICS:
   3.1 CURRENT RATING: 1AMP. MAX.PER CONTACT
   3.2 LOW LEVEL CONTACT RESISTANCE: 50MILLIOHMS
   3.3 DIELECTRIC WITHSTANDING VOLTAGE: 500V AC MIN. FOR 1 MINUTE, WITH 1mA MAX. CURRENT LEAKAGE.
   3.4 INSULATION RESISTANCE: 100 MEGAOHMS MIN. INITIAL AT 100VDC.
4. MECHANICAL CHARACTERISTICS:
   4.1 MATING FORCE: 40N(4.0kgf) MAX.
   4.2 UNMATING FORCE: 10N(1.02kgf) MIN.
   4.3 CONTACT RETENTION FORCE: 1.47N(0.15kgf) MIN.
   4.4 DURABILITY: 5000 TIMES MATING/UNMATING CYCLES.
5. ENVIRONMENTAL CHARACTERISTICS:
   5.1 OPERATING TEMPERATURE: -0°C TO +50°C.
   5.2 STORAGE TEMPERATURE: -20°C TO +60°C.
   5.3 SALT SPRAY: SALT WATER DENSITY OF 5%, TEMPERATURE OF 35°C, TIME 24HOUR.

USB F - 04 X X X X X AM

- AM: 特征码
- X: 塑胶颜色: W: 白胶 B: 黑胶
- X: 外壳材料: C: 铜壳 T: 铁壳
- X: 包装: A:真空盘
- X: 外壳电镀: C:镀全镍至少100μ" A:镀全锡至少100μ" O: 素材
- 04: 4 PIN
- F: 母座
- USB: USB系列

端子电镀:
- M:功能区打镍底镀金至少1μ" 锡脚部位打镍底镀亮纯锡 100-120μ"
- N:功能区打镍底镀金至少3μ" 锡脚部位打镍底镀亮纯锡 100-120μ"
- P:功能区打镍底镀金至少5μ" 锡脚部位打镍底镀亮纯锡 100-120μ"
- G:功能区打镍底镀金至少10μ" 锡脚部位打镍底镀亮纯锡 100-120μ"

CUSTOMER DRAWING		TOLERANCE UNLESS OTHERWISE SPECIFIED					
		X.± 0.30	X.°± 4°				
		.X± 0.25	.X°± 4°				
DRAWIN	赵会纳	.XX± 0.20		PART NO.	USBF-04XXXXXAM	DWG NO.	22-0000-003
CHECKED		UNIT	mm	TITLE	USB B/Female 90度插板 DIP Type		
APPROVE		SCALE	1:1				
DATE	05/18'07	SHEET	1/1	PROJ.		SIZE A4	REV. B