C&K Switches Catalog

Pushbutton

Tactile

Navigation

Keyswitch

Detect

Toggle

Rocker

Dip

Slides

Snap

Rotary

Rotary (Encoder)

Switchlock

Thumbwheel

Smartcard Connector

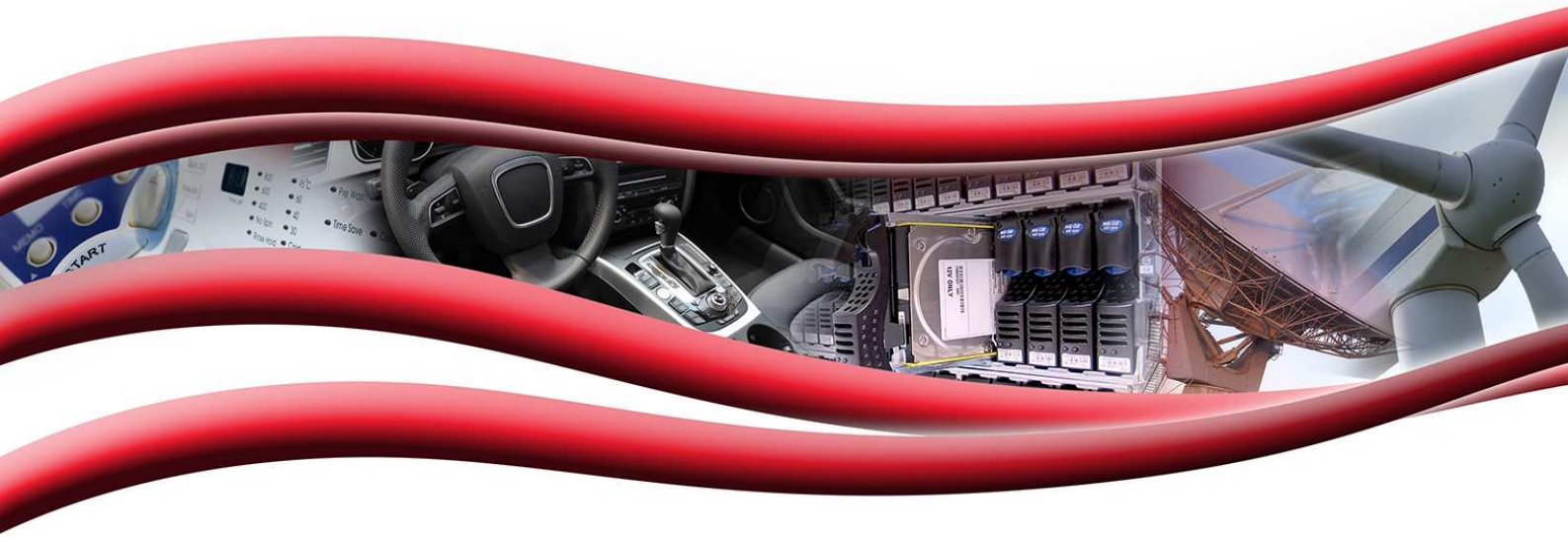

Pushbutton
Product Selection Guide

Pushbutton									
Series	**ELUM**	**EP**	**TP**	**E020**	**8020**	**E010**	**8060**	**8500**	**KM**
Switch Type	Mom./ Latching	Tiny	Tiny	Snap-acting Mom.	Snap-acting Mom.	Miniature	Alternate Action	Sub-miniature	Sub-miniature
Poles/Throws	SPDT	SPST, SPDT, DPST	SPST, SPDT, DPST	SPDT, DPDT	SPDT, DPDT, 3PDT, 4PDT	SPDT	SPDT, DPDT	SPST	SPST, SPDT
Max. Current	3.5 VA	1 Amp	1 Amp	1 Amp	1 Amp	4 Amps	6 Amps	3 Amps	1 Amp
Process Sealed		•		•		•			
Illuminated	•				•		•	•	
PCB Mount Options									
Thru-hole	•	•	•	•	•	•	•	•	•
Vertical		•	•	•	•	•	•	•	•
Right Angle	•	•	•	•	•	•	•	•	•
Surface Mount	•	•							
Panel Mount			•		•	•	•	•	•
Page No.	A-4	A-9	A-15	A-21	A-29	A-46	A-52	A-62	A-67

Pushbutton							
Series	**8600**	**8700**	**GP**	**PN**	**PHB**	**F**	**NE-18**
Switch Type	Micro-miniature	Over Travel	Ultra-miniature	Alternate & Mom. Action	Short Stroke	Alternate & Mom. Action	Mains / Power
Poles/Throws	SPST	SPST	SPST, SPDT	SPDT, DPDT, 4PDT	DPDT, 4PDT	DPDT, 4PDT, 6PDT, 8PDT, 10PDT	DPST, DPDT Varied
Max. Current	500 mA	1 Amp	0.4 VA	200 mA	100 mA	500 mA	6 A
Process Sealed			•				
PCB Mount Options							
Thru-hole	•	•	•	•	•	•	•
Vertical	•	•	•				
Right Angle			•	•	•	•	•
Surface Mount			•				
Panel Mount	•	•				•	•
Page No.	A-71	A-74	A-77	A-81	A-84	A-87	A-96

Pushbutton
Product Selection Guide

Pushbutton								
Series	**FP**	**AP**	**APB**	**HP**	**NP**	**PBA**	**PB**	**PS**
Switch Type	Ultra Miniature	Industrial	Industrial	Hall Effect	Sealed Power	Snap-acting Mom.	Miniature	Sub-miniature Microminiature
Poles/Throws	SPST	SPST	SPST	Linear Output	SPDT	DPST	DPDT 4PDT	SPDT DPDT
Max. Current	0.4 VA	400mA	400mA	10 mA	5 Amp	250mA	0.3A / 1A	0.1 / 1A 0.3 / 2A
Process Sealed	•	IP67	IP67	IP68	IP68			
PCB Mount Options								
Thru-hole	•	•	•		•	•	•	•
Vertical	•	•	•	•	•			•
Right Angle	•					•	•	•
Panel Mount		•	•	•	•			•
Wire Leads		•	•	•	•			
Solder Lug		•	•					
Surface Mount								
Quick Connect								
Page No.	A-105	A-108	A-114	A-118	A-120	A-127	A-131	A-139

ELUM™ Series
Right Angle Illuminated Latching Pushbutton

LEAD FREE COMPATIBLE OPTION

Features/Benefits

- *SPDT (N.O. & N.C.)*
- *Low height above PCB*
- *Reliable self-cleaning contact*
- *Surface-mount or thru-hole PCB*
- *Standard or custom actuator*
- *Central LED illumination*
- *Latching or Momentary*
- *Long travel. Smooth feel*
- *RoHS compliant and compatible*

Typical Applications

- *Telecom network equipment*
- *Automotive electronics*
- *Consumer electronics*
- *Computer, server, modem, data storage*
- *Professional instrumentation, medical*

Patent Numbers
6,974,924 B2 US
EP1583118B1 Europe

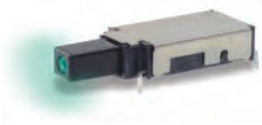

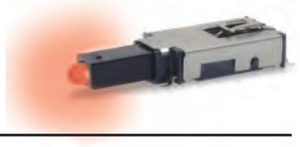

Materials

FIXED CONTACTS: Stainless steel, silver plated with gold flash
TERMINALS: Stainless steel, silver plated
MOVABLE CONTACTS: Copper alloy, silver plated with gold flash
BASE: Glass filled LCP (UL94V-0)
ACTUATOR: Glass filled nylon 4/6 (UL94V-0)
COVER: Stainless steel

Electrical

MAXIMUM POWER: 3.5 VA
MIN./MAX. VOLTAGE: 20 mV – 50 VDC
MIN./MAX. CURRENT: 0.01 mA – 250 mA
DIELECTRIC STRENGTH: ≥ 250 Vrms
CONTACT RESISTANCE: ≤ 50 mΩ
INSULATION RESISTANCE: ≥ 10^9 Ω
BOUNCE TIME: ≤1 ms
LED SPECIFICATIONS: See page A-5

Mechanical

OPERATING FORCE: 2.5 N at Full Travel
SWITCHING TRAVEL: .067" (1.7 mm)
LATCH TRAVEL: .131" (3.6 mm)
FULL TRAVEL: .200" (5.1 mm)

Operating Environment

OPERATING TEMPERATURE: -40˚C TO 80˚C.
STORAGE TEMPERATURE: -40˚C TO 80˚C.
RELATIVE HUMIDITY: 90% R.H. @ 80˚C.
OPERATING LIFE: 30,000 Cycles.
VIBRATION: Per EIA 186-E Method
MECHANICAL SHOCK: Per EIA 186-E Method 12.
OVERLOAD: Withstands 40 N for 1 minute without damage

Process Environment

SOLDERABILITY: According to Mil STD 202F Method 208D or EIA RS-186E Method 9.
LEAD FREE PROCESS COMPATIBLE: 260˚C peak, 10 seconds Max. above 250° C.
WASHING PROCESS: No clean process compatible (SMT)
Bottom wash compatible (Thru-hole)
SHEAR TEST (SWITCH/PCB): > 40 N

Packaging

"SA" Terminal Style SMT: Tape and reel per EIA 481-2 (450/reel)
"TH" Terminal Style PC: Tray (60/tray)

NOTE: Any models supplied with Q, contact material are RoHS compliant.

NOTE: Specifications and materials listed above are for switches with standard options. For information on specific and custom switches, please contact Customer Service.

Build-A-Switch

To order, simply select desired option from each category and place in the appropriate box.

E L U M — □ □ — □ □ — Q — □ — □ □ □

Designation
ELUM ELUM Series

Switch Function
OA Momentary
OC*** Momentary short travel
EE Latching (push-push)

Terminal Style
TH Right Angle, PC thru-hole
SA Right Angle, surface mount

Contact Material*
Q Silver with gold flash

Illumination
(NONE) Models without illumination
1 LED White
2 LED Bi-color – Red (Green)
3 LED Red
5 LED Amber
6 LED Green
7 LED Blue
8 LED Bi-Color – Amber (Green)

Actuator Style**
C02 Black without window
C12 Black with window
C22 Black with window and snap feature for custom actuators

* Other plating options available, please contact Customer Service.
** Custom actuators available, please contact Customer Service.
*** Short travel available in momentary only.

Third Angle Projection

Dimensions are shown: Inches (mm)
Specifications and dimensions subject to change

ELUM™ Series
Right Angle Illuminated Latching Pushbutton

STANDARD OPTIONS

ELUMEESAQ7C12

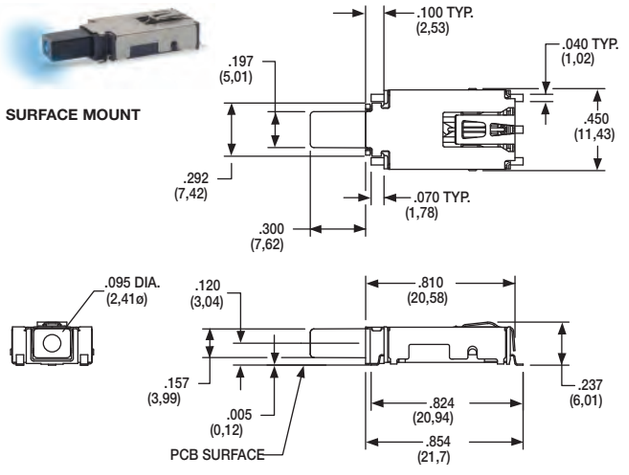

ACTUATOR SHOWN EXTENDED POSITION

ELUMOATHQ6C12

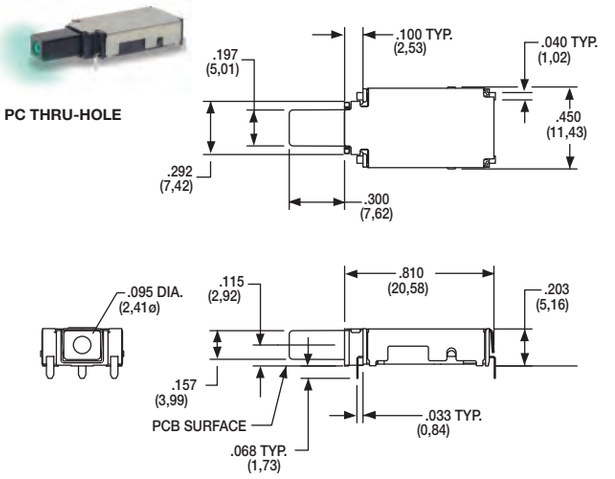

ACTUATOR SHOWN EXTENDED POSITION

ELUMEESAQ3C22

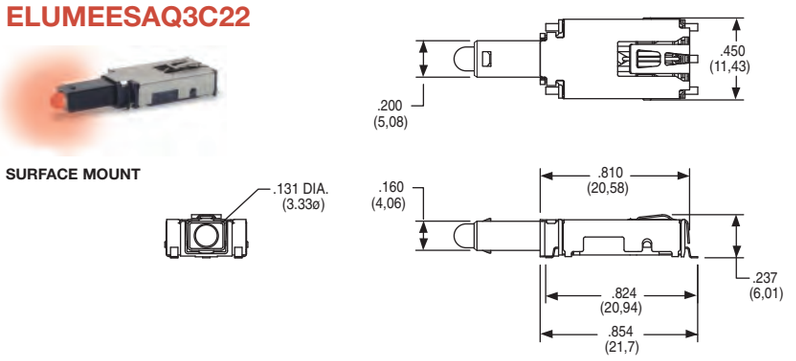

ACTUATOR SHOWN EXTENDED POSITION

DESIGNATION

E L U M

ELUM ELUM SERIES, Illuminated Latching Pushbutton

SWITCH FUNCTION

OPTION CODE	NO. OF POLES	POSITION 1 SWITCH FUNCTION	POSITION 1 CONNECTED TERMINALS	POSITION 2 SWITCH FUNCTION	POSITION 2 CONNECTED TERMINALS	SCHEMATIC
OA / OC	SP Momentary	ON	3 – 4	ON (Mom.)	3 – 2	SPDT: 3 C, 4 NC, NO 2; 5, 1; + Anode – Cathode
EE	SP Latching (Push-Push)	ON	3 – 4	ON	3 – 2	

For SPST N.O. function, only terminals 3 & 2 are used.
For SPST N.C. function, only terminals 3 & 4 are used.
Circuit: Make before break

LED pins 1 & 5 are independent of switch function.

NOTE:
For bi-color LED's the polarity must be reversed to alternate the color

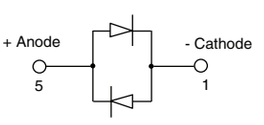

Third Angle Projection

Dimensions are shown: Inches (mm)
Specifications and dimensions subject to change

ELUM™ Series
Right Angle Illuminated Latching Pushbutton

TERMINAL STYLE

SA RIGHT ANGLE, SURFACE MOUNT

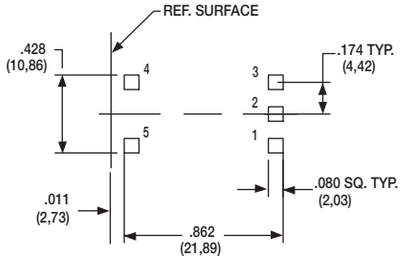

PCB MOUNTING

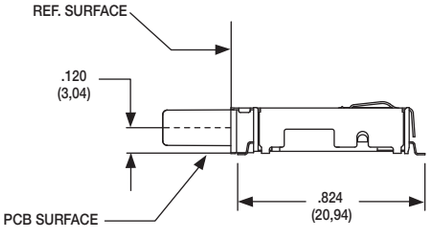

Terminal 5 = LED Anode

TH RIGHT ANGLE, PC THRU-HOLE

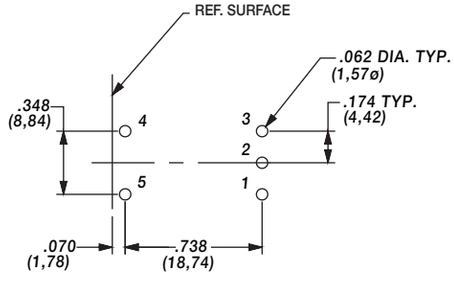

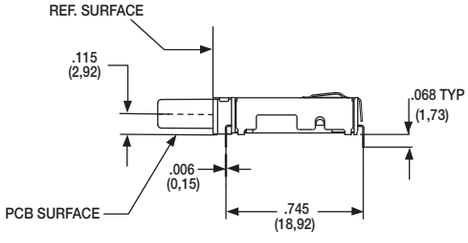

Terminal 5 = LED Anode

CONTACT MATERIAL

OPTION CODE	CONTACT MATERIAL	TERMINAL PLATING	RATINGS
Q	SILVER WITH GOLD FLASH	SILVER	250 mA

* Note: See Technical Data section of this catalog for RoHS compliant and compatible definitions and specifications.

FIXED CONTACTS AND TERMINALS: Stainless steel, silver plated with gold flash
MOVABLE CONTACTS: Copper alloy, silver plated with gold flash

NOTE: Any models supplied with Q, contact material are RoHS compliant.

ILLUMINATION

OPTION CODE	ILLUMINATION TYPE	TYPICAL INTENSITY* MIN	MAX	PEAK WAVELENGTH	Vf Forward Voltage
		(mcd)		(nm)	
0	Model without illumination	N/A		N/A	
1	LED Super White	4,000	5,000	N/A	3.5
2	LED Bi-Color – Red (Green)	10	20	635/565	2.0
3	LED Red	4	8	700	2.0
5	LED Amber	35	50	610	2.0
6	LED Green	35	50	565	2.0
7	LED Super Blue	800	1,500	470	3.8
8	LED Bi-Color – Amber (Green)	10	10	585/565	2.0

*LED FORWARD CURRENT: 20 mA
LED FORWARD VOLTAGE: see chart above
LED REVERSE VOLTAGE: 5.0 V MAX

* For information on specific and custom LED, please contact Customer Service.

Third Angle Projection

Dimensions are shown: Inches (mm)
Specifications and dimensions subject to change

ACTUATOR STYLE*

C02 BLACK WITHOUT WINDOW

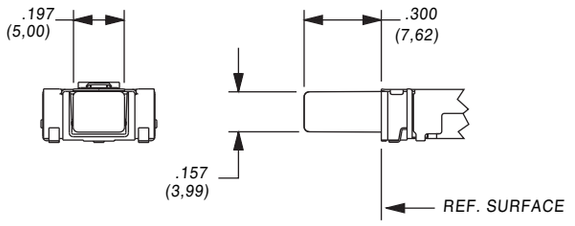

C12 BLACK WITH WINDOW

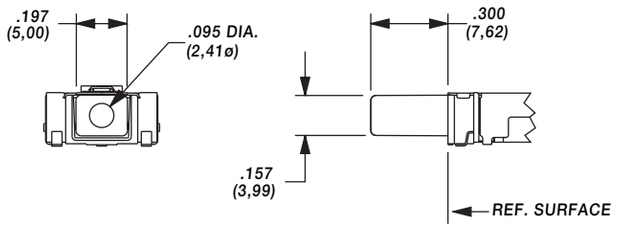

C22 BLACK WITH WINDOW AND SNAP FEATURE TO ACCEPT CUSTOM CAP

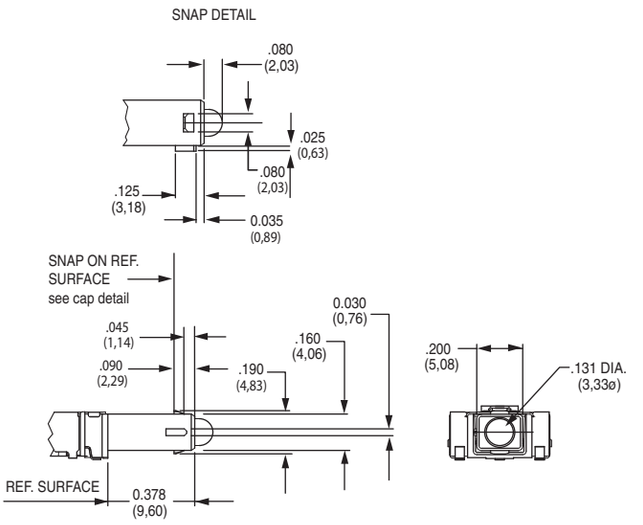

* Custom actuators available, please contact Customer Service.

FORCE TRAVEL DIAGRAM

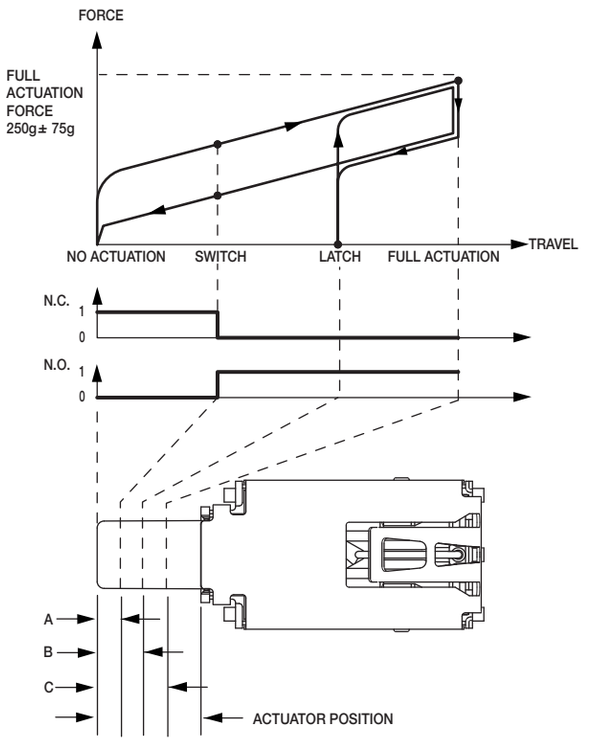

OA, EE ACTUATOR POSITION			
A	SWITCH POINT	.067 ±.020	1,7 ± 0.5mm
B	LATCH	.131 ±.020	3,3 ± 0.5mm
C	FULL ACTUATION	.200 ±.020	5,1 ± 0.5mm

OC ACTUATOR POSITION			
A	SWITCH POINT	.067 ±.020	1,7 ± 0.5mm
C	FULL ACTUATION	.098 ±.020	2,5 ± 0.5mm

TAPE & REEL

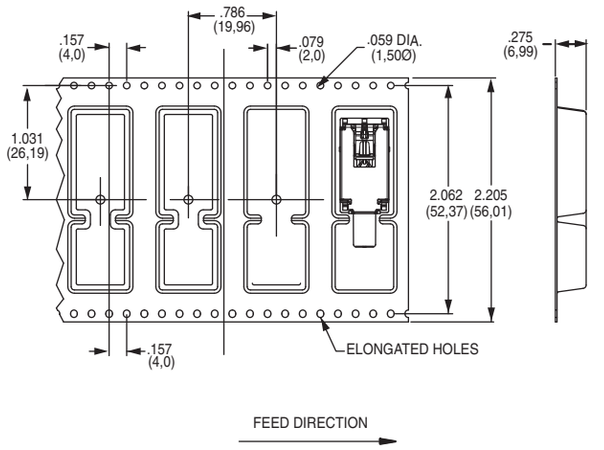

Third Angle Projection

Dimensions are shown: Inches (mm)
Specifications and dimensions subject to change

ELUM™ Series
Right Angle Illuminated Latching Pushbutton

AVAILABLE HARDWARE

Cap

PART NO.

957C00000 High temperature black cap with universal standby symbol

956C02000 High temperature black cap with no symbol

Material: 4/6 Nylon SMT compatible

Cap

PART NO.

181D01000 Paint and Laser Etched with black paint and universal standby symbol

Material: Clear polycarbonate

Cap

PART NO.

181D00000 Paint and laser etched with white paint underlay and black paint with universal standby symbol.

Material: Clear polycarbonate

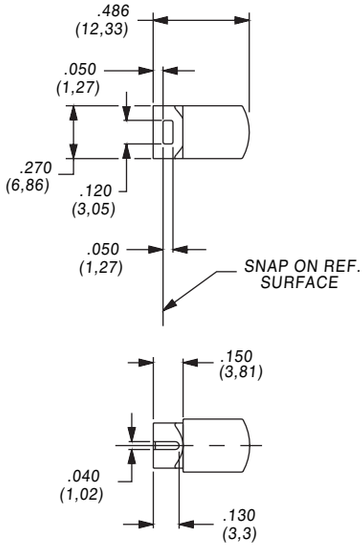

NOTE: Caps are for use with the C22 actuator style. Other colors and symbols available, consult Customer Service Center.

CAP INSTALLATION

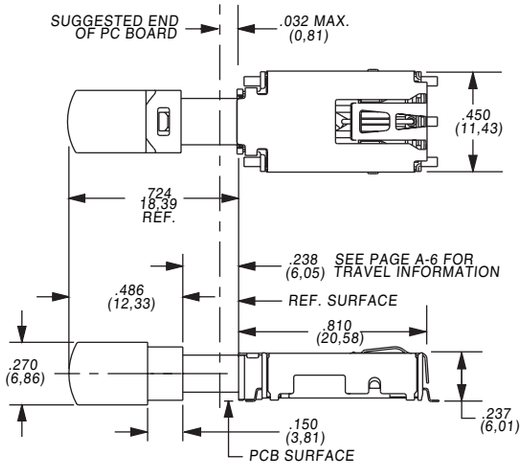

VIEW WITH 957C CAP INSTALLED

Third Angle Projection

Dimensions are shown: Inches (mm)
Specifications and dimensions subject to change

EP Series
Sealed Tiny Pushbutton Switches

Features/Benefits

- ***Sealed against solder & cleaning processes***
- ***Thru-hole and surface mount models***
- ***Snap-fitting actuator accepts standard caps***
- ***Tape & reel packaging available***
- ***RoHS compliant models available***

Models Available

Typical Applications

- ***Telecommunications and networking equipment***
- ***Computers and peripherals***
- ***Instrumentation and controls***

Specifications

CONTACT RATING: B contact material: 0.4 VA max. @ 20 V AC or DC max. See page A-13 for additional ratings.

ELECTRICAL LIFE: EP11, EP21 models: 60,000 make-and-break cycles at full load. EP12 models: 30,000 cycles.

CONTACT RESISTANCE: Below 20 mΩ typ. initial @ 2-4 V DC, 100 mA, for both silver and gold plated contacts.

INSULATION RESISTANCE: 10^9 Ω min.

DIELECTRIC STRENGTH: 1000 Vrms min. @ sea level.

OPERATING TEMPERATURE: –30°C to 85°C.

SOLDERABILITY: Per MIL-STD-202F method 208D, or EIA RS-186E method 9 (1 hour steam aging).

DEGREE OF PROTECTION: IP57; Protection against harmful dust deposit, full-scale voltage protection, temporary immersion.

PACKAGING: Surface mount switches standard in anti-static tape and reel packaging per EIA 481-3, see page A-14 for drawings and reel information. Tape and cover strip are conductive for use near statically sensitive components, consult Customer Service Center.

Materials

CASE & BUSHING: High temperature material, glass filled nylon 4/6, flame retardant, heat stabilized (UL 94V-0) on EP11 / EP12 models; glass filled nylon 6/6 on EP21.

PLUNGER: Thermoplastic polyester or glass filled nylon (UL 94V-0), with internal o-ring seal. SA surface mount: High temperature material, glass filled LCP (UL 94V-0).

SWITCH SUPPORT: Brass, matte-tin plated.

CONTACTS & TERMINALS: B contact material: Copper alloy, with gold plate over nickel plate. See page A-13 for additional contact materials.

TERMINAL SEAL: Epoxy.

NOTE: Any models supplied with Q, B, P, S, R or G contact material are RoHS compliant.

NOTE: Specifications and materials listed above are for switches with standard options. For information on specific and custom switches, consult Customer Service Center.

CAUTION: PC mounting layouts and pads as shown are designed to be compatible with the latest equipment and reflow techniques. Care should be taken in the design and location of PC lands to suit individual needs. Orientation relative to reflow direction may significantly impact solder joint integrity.

Build-A-Switch

To order, simply select desired option from each category and place in the appropriate box. Available options are shown and described on pages A-10 thru A-14. For additional options not shown in catalog, consult Customer Service Center. All models are process sealed to withstand machine soldering temperatures and pressure wash cleaning methods.

Switch Function
- **EP11** SPST Off-Mom.
- **EP12** SPDT On-Mom.
- **EP21** DPST Off-Mom.

Plunger
- **S** .215" high
- **S1** .110" high
- **S2** .465" high
- **FP** Flush
- **R** Snap-fitting, .215 high

Bushing
- **D1** Unthreaded

Terminations
- **A** Right angle, PC thru-hole
- **C** PC Thru-hole
- **AV** Vertical right angle, PC thru-hole
- **AV3** Vertical right angle, snap-in, PC thru-hole
- **SA** Right angle, surface mount
- **SA1** Right angle, surface mount rear facing
- **V3** Vertical mount, v-bracket
- **V31** Vertical mount, v-bracket, snap-in (EP11 & EP12 only)
- **W** Wire wrap

Contact Material
- **B** Gold
- **P** Gold, matte-tin
- **Q** Silver
- **S** Silver, matte-tin
- **G** Gold over silver
- **R** Gold over silver, matte tin

Seal
- **E** Epoxy

Dimensions are shown: Inches (mm)
Specifications and dimensions subject to change

EP Series
Sealed Tiny Pushbutton Switches

SWITCH FUNCTION

NO. POLES	MODEL NO.	SWITCH FUNCTION POS. 1 (C&K marking on opposite side)	SWITCH FUNCTION POS. 2 (C&K marking on opposite side)	CONNECTED TERMINALS POS. 1 (C&K marking on opposite side)	CONNECTED TERMINALS POS. 2 (C&K marking on opposite side)	SCHEMATIC
SP	EP11	OFF	MOM.	OPEN	1-3	SPST 1 3
	EP12	ON	MOM.	2-1	2-3	SPDT NC 1 2 (COMM) 3 NO

SPDT

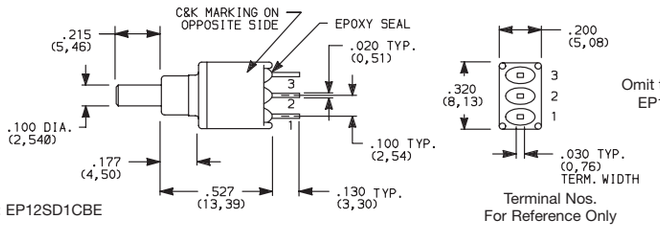

Omit terminal 2 for EP11 models.

Part number shown: EP12SD1CBE

DP	EP21	OFF	MOM.	OPEN	1-3,4-6	DPST 1 3 4 6

DPST

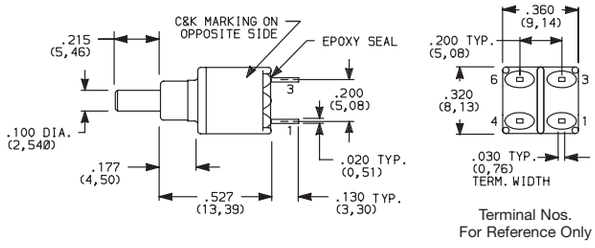

Part number shown: EP21SD1CBE

MOM. = Momentary

All models cULus with all options when ordered with G, Q, R or S contact material.

PLUNGER

S .215" HIGH

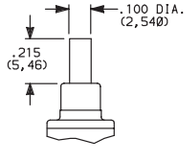

S1 .110" HIGH

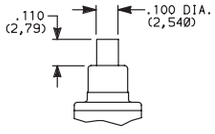

S2 .465" HIGH

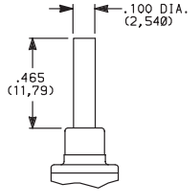

FP FLUSH PLUNGER

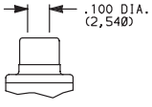

R SNAP-FITTING

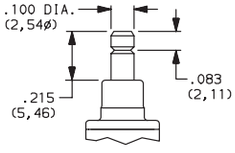

S1& S2 actuators are not available with EP12 & EP21 models.

FP & R actuators are not available with EP21 model.

NOTE: Caps available for plunger options, see page A-14.

BUSHING

D1 UNTHREADED

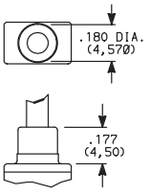

NOTE: Internal actuator o-ring standard.

Third Angle Projection

Dimensions are shown: Inches (mm)
Specifications and dimensions subject to change

TERMINATIONS

C PC THRU-HOLE

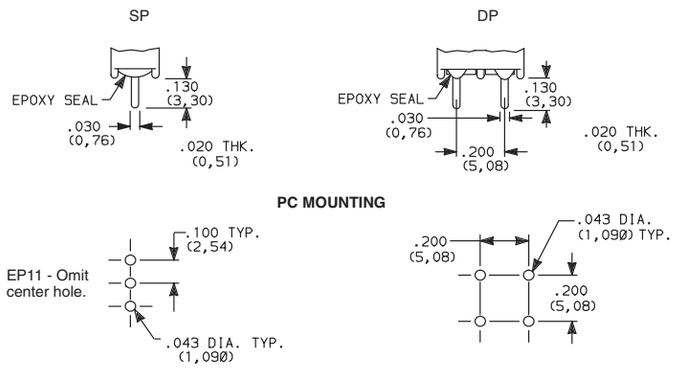

SP and DP

W WIRE WRAP

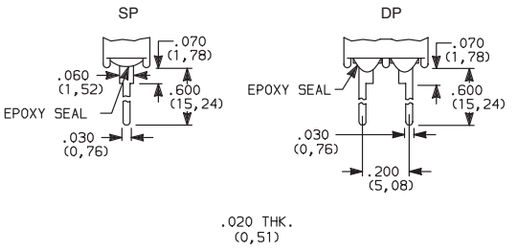

SP and DP

A RIGHT ANGLE, PC THRU-HOLE

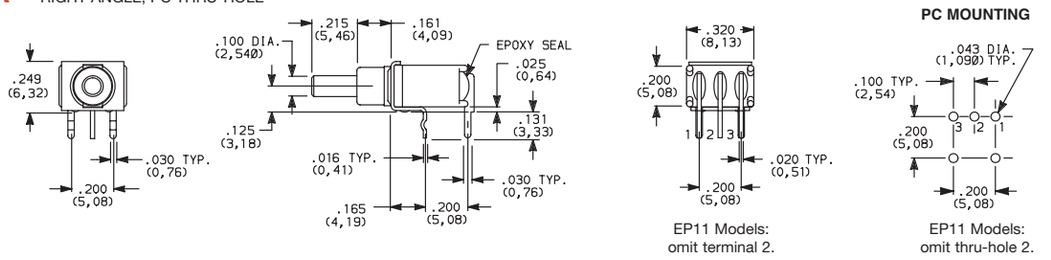

EP11 Models: omit terminal 2.

EP11 Models: omit thru-hole 2.

EP12SD1ABE
SPDT

A RIGHT ANGLE, PC THRU-HOLE

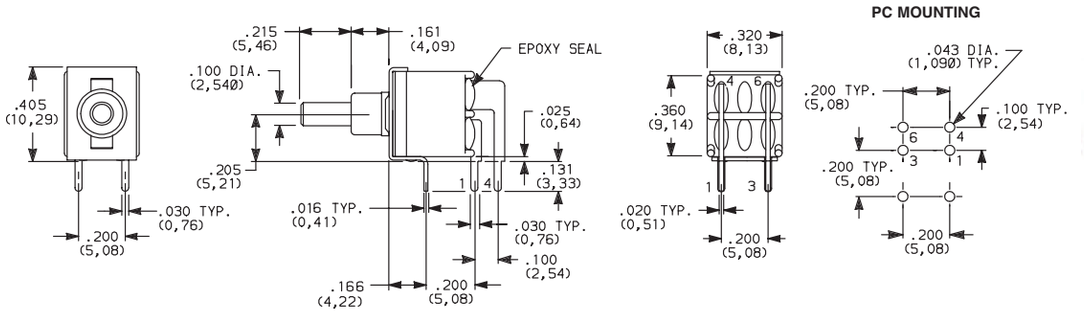

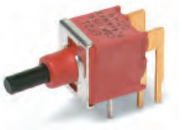

EP21SD1ABE
DPST

AV VERTICAL RIGHT ANGLE, PC THRU-HOLE

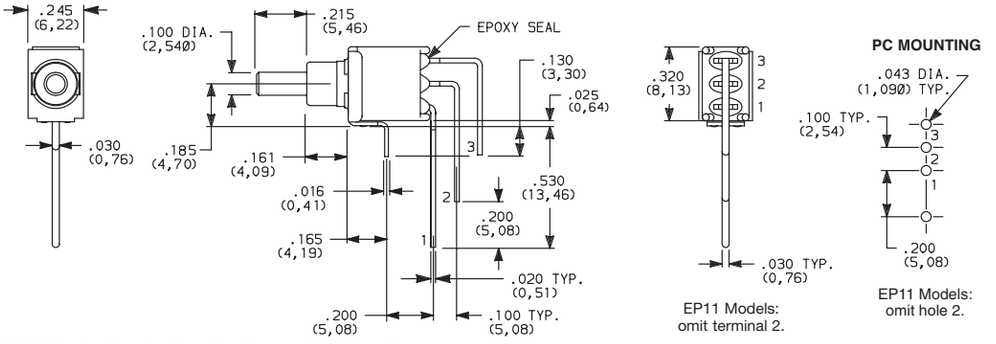

EP11 Models: omit terminal 2.

EP11 Models: omit hole 2.

EP12SD1AVBE
SPDT

NOTE: Terminal bend radii and lead-in manufacturing option.

Third Angle Projection

Dimensions are shown: Inches (mm)
Specifications and dimensions subject to change

EP Series
Sealed Tiny Pushbutton Switches

TERMINATIONS

AV VERTICAL RIGHT ANGLE, THRU-HOLE

EP21SD1AVBE
DPST

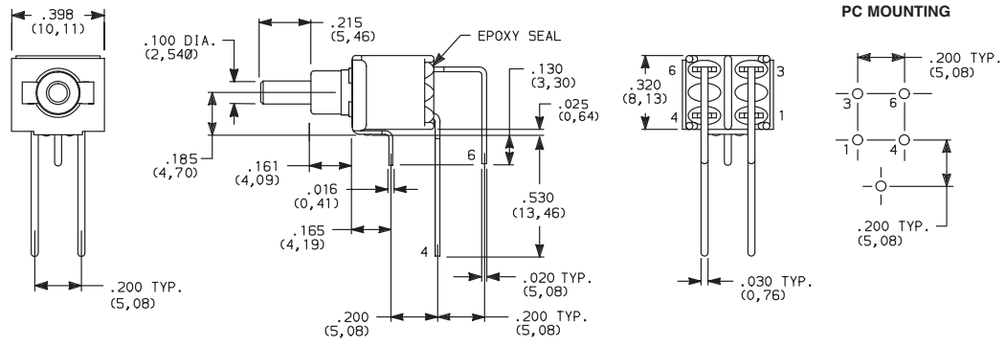

NOTE: Terminal bend radii and lead-in manufacturing option.

AV3 VERTICAL RIGHT ANGLE, SNAP-IN, PC THRU-HOLE

EP12SD1AV3BE
SPST

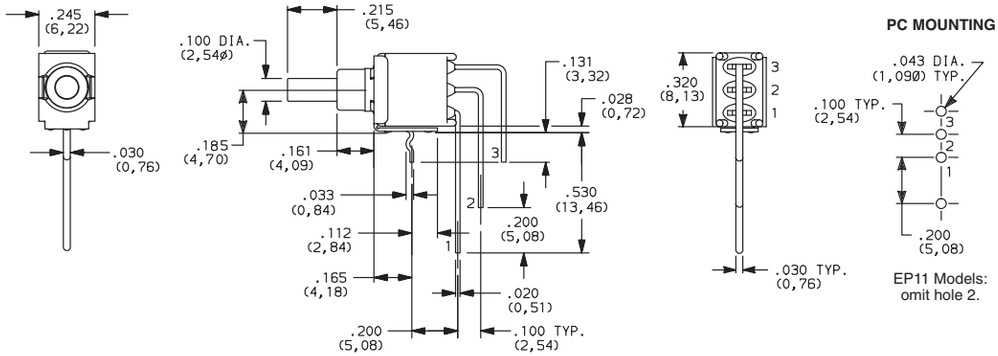

SA RIGHT ANGLE, SURFACE MOUNT

EP12SD1SAPE
SPDT

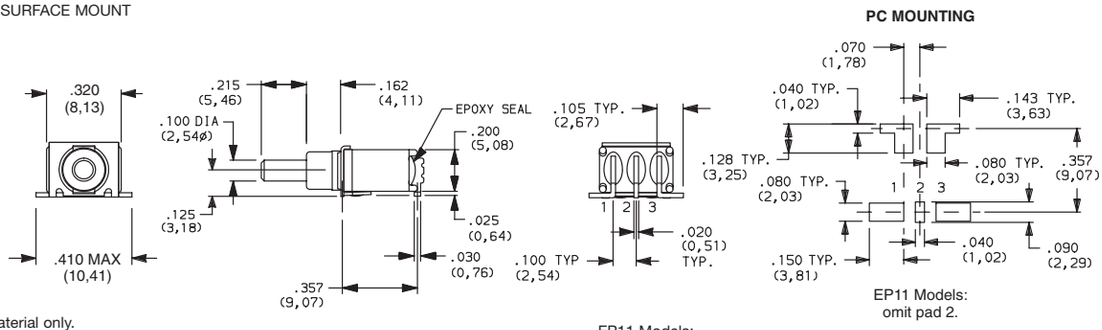

Available with P contact material only.
Not Available on DPST models.

SA1 RIGHT ANGLE, SURFACE MOUNT

EP12SD1SA1BE
SPDT

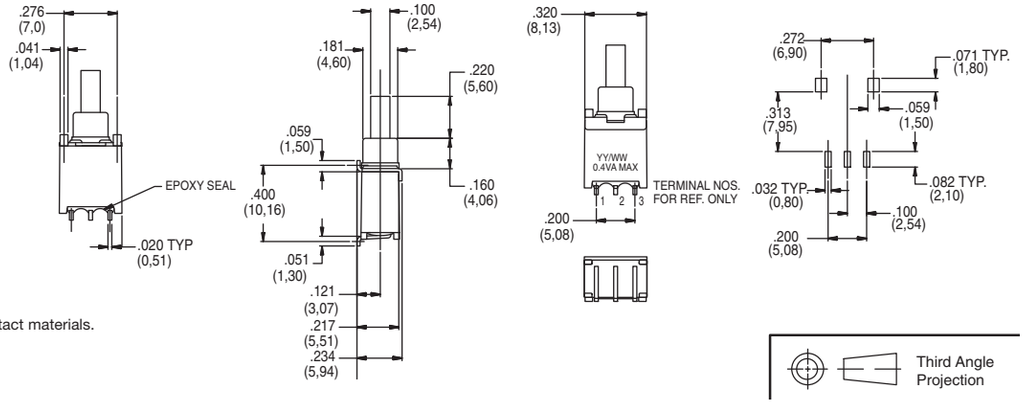

SA1 is only available with B and P contact materials.
Not Available on DPST models.

Third Angle Projection

Dimensions are shown: Inches (mm)
Specifications and dimensions subject to change

TERMINATIONS

V3 VERTICAL MOUNT, V-BRACKET

V31 VERTICAL MOUNT, V-BRACKET, SNAP-IN

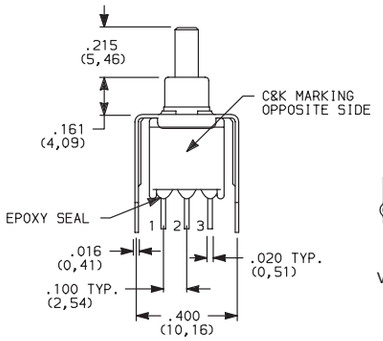

EP11 Models:
omit terminal 2.

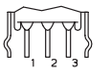

V31 SNAP-IN

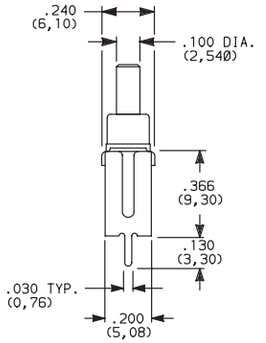

PC MOUNTING

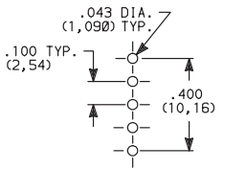

EP11 Models:
omit centerhole.

EP12SD1V3BE
SPDT

V3 VERTICAL MOUNT, V-BRACKET

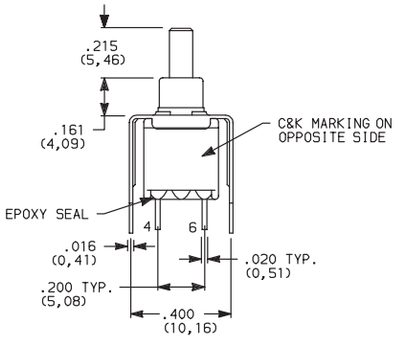

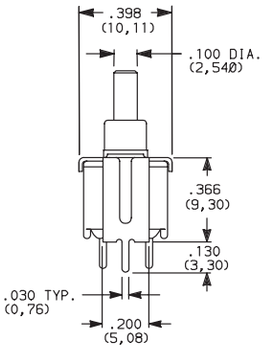

PC MOUNTING

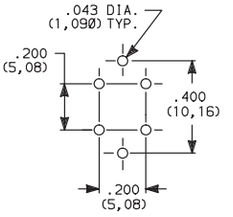

EP21SD1V3BE
DPST

CONTACT MATERIAL

OPTION CODE	CONTACT MATERIAL	TERMINAL PLATING	RATINGS	
B	GOLD [1]	GOLD [1]	LOW LEVEL/DRY CIRCUIT	0.4 VA MAX. @ 20 V AC OR DC MAX.
P		MATTE-TIN [6]		
Q	SILVER [4,5]	SILVER [5]	POWER	1 AMP @ 120 V AC OR 28 V DC.
S		MATTE-TIN [6]		
G	GOLD OVER SILVER [2,3]	GOLD [3]	LOW LEVEL/DRY CIRCUIT OR POWER	0.4 VA MAX @ 20 V AC OR DC MAX. OR 1 AMP @ 120 V AC OR 28 V DC.
R		MATTE-TIN [6]		

* Note: See Technical Data section of this catalog for RoHS compliant and compatible definitions and specifications.

[1] CONTACTS & TERMINALS: Copper alloy, with gold plate over nickel plate.
[2] END CONTACTS: Coin silver, with gold plate over nickel plate.
[3] CENTER CONTACTS & ALL TERMINALS: Copper alloy, with gold plate over nickel plate.
[4] END CONTACTS: Coin silver, silver plated.
[5] CENTER CONTACT & ALL TERMINALS: Copper alloy, silver plated.
[6] TERMINALS: Copper alloy, with matte tin over nickel plate.

NOTE: Any models supplied with Q, B P, S ,R or G contact material are RoHS compliant.

All models c UL us with all options when ordered with G, S, R or Q contact material.

SEAL

E EPOXY SEAL

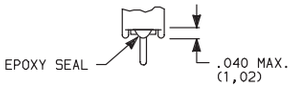

Third Angle Projection

Dimensions are shown: Inches (mm)
Specifications and dimensions subject to change

EP Series
Sealed Tiny Pushbutton Switches

AVAILABLE HARDWARE

Cap

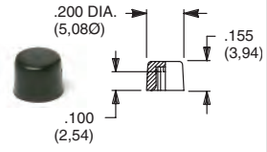

PART NO.

508101000 WHITE
508102000 BLACK
508103000 RED

Material: Nylon
Finish: Gloss

Not for use on S1 plunger

Cap

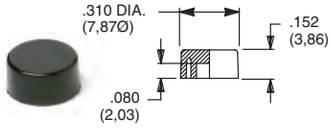

PART NO.

465801000 WHITE
465802000 BLACK
465803000 RED

Material: Nylon
Finish: Gloss

Not for use on S1 plunger

Cap
Compatible with snap-fitting plungers EP11 & EP12 Models. R option only.

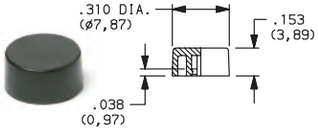

PART NO.

585A01000 WHITE
585A02000 BLACK
585A03000 RED

Material: Nylon
Finish: Gloss

Cap
Compatible with snap-fitting plungers EP11 & EP12 Models. R option only.

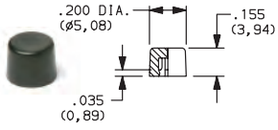

PART NO.

785A01000 WHITE
785A02000 BLACK
785A03000 RED

Material: Nylon
Finish: Gloss

NOTE: Other colors available, consult Customer Service Center.

TAPE & REEL

For part number EPXX-SA/SA1

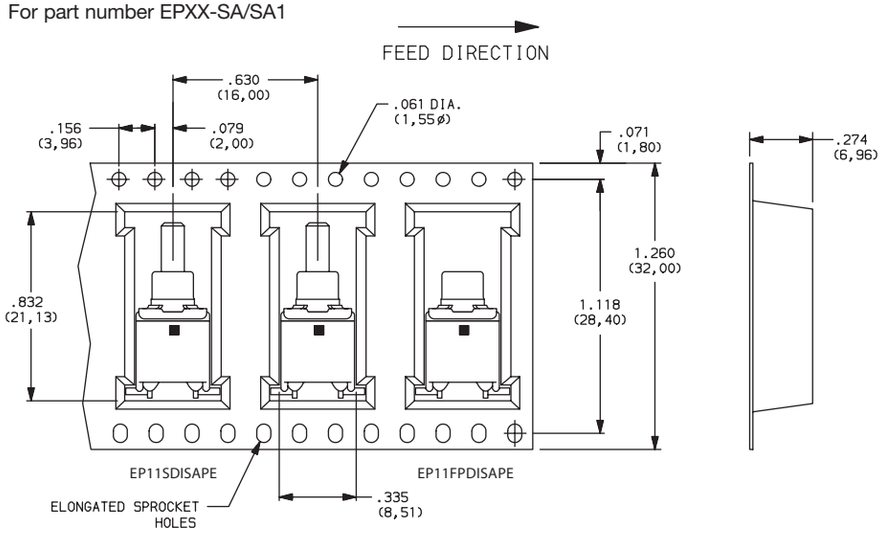

REEL INFORMATION	
OUTSIDE DIAMETER	13.00 (330,0)
PILOT HOLE	.512 (13,0)
QUANTITY PER REEL	600

Third Angle Projection

Dimensions are shown: Inches (mm)
Specifications and dimensions subject to change

TP Series
Tiny Pushbutton Switches

Features/Benefits

- ***Subminiature size—capable of switching 1 AMP***
- ***Vertical & right angle terminations***
- ***PC & panel mount models***
- ***Snap-in front panel mounting available***
- ***Epoxy terminal seal-compatible with bottom wash cleaning***
- ***RoHS compliant models available***

Models Available

Typical Applications

- ***Telecommunications and networking equipment***
- ***Computers and peripherals***
- ***Instrumentation and controls***

Specifications

CONTACT RATING: B contact material: 0.4 VA max. @ 20 V AC or DC max. Q contact material: 1 AMP @ 120 V AC or 28 V DC. See page A-19 for additional ratings.

ELECTRICAL LIFE: TP11, TP21 MODELS: 60,000 make-and-break cycles at full load. TP12 MODELS: 30,000 cycles.

CONTACT RESISTANCE: Below 20 mΩ typ. initial @ 2-4 V DC, 100 mA, for both silver and gold plated contacts.

INSULATION RESISTANCE: $10^9\Omega$ min.

DIELECTRIC STRENGTH: 1000 Vrms min. @ sea level.

OPERATING TEMPERATURE: –30°C to 85°C.

SOLDERABILITY: Per MIL-STD-202F method 208D, or EIA RS-186E method 9 (1 hour steam aging).

NOTE: Any models supplied with Q, B, P, R or G contact material are RoHS compliant.

NOTE: Specifications and materials listed above are for switches with standard options. For information on specific and custom switches, consult Customer Service Center.

Materials

CASE: Glass filled nylon 4/6 or 6/6, flame retardant, heat stabilized or diallyl phthalate (DAP), (UL 94V-0).

PLUNGER: Thermoplastic polyester (UL 94V-0).

CAP & FRAME: Nylon, black standard.

BUSHING: Brass, nickel plated.

HOUSING: Stainless steel.

SWITCH SUPPORT: Brass, matte-tin plated.

END CONTACTS: B contact material: Copper alloy, with gold plate over nickel plate. Q contact material: Coin silver, silver plated. See page A-19 for additional contact materials.

CENTER CONTACT & ALL TERMINALS: B contact material: Copper alloy, with gold plate over nickel plate. Q contact material: Copper alloy, silver plated. See page A-19 for additional contact materials.

TERMINAL SEAL: Epoxy. Refer to soldering and cleaning in Technical Data Chapter

HARDWARE: Nut & Locking Ring: Brass nickel plated. Lockwasher: Steel, nickel plated.

Build-A-Switch

To order, simply select desired option from each category and place in the appropriate box. Available options are shown and described on pages A-16 thru A-20. For additional options not shown in catalog, consult Customer Service Center. All models have epoxy terminal seal and are compatible with all “bottom-wash” PCB cleaning methods.

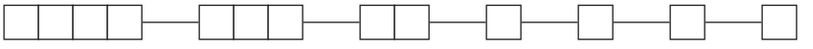

Switch Function
- **TP11** SPST Off-Mom.
- **TP12** SPDT On-Mom.
- **TP21** DPST Off-Mom.

Actuator or Bushing
- **SH** .155" high plunger, threaded, .220" high bushing, flat
- **SH8** .155" high plunger, unthreaded, .220" high bushing, round
- **SH9** .155" high plunger, unthreaded, .220" high bushing, flat
- **J81** Snap-in with frame
- **LT** .215" high plunger, threaded, .310" high bushing, flat
- **LT9** .215" high plunger, unthreaded, .310" high bushing, flat
- **MS9** .130" high plunger, .020" high bushing, round

Terminations
- **A** Right angle, PC thru-hole
- **C** PC Thru-hole
- **Z** Solder lug
- **AV** Vertical right angle, PC thru-hole
- **V3** Vertical mount, v-bracket
- **W** Wire wrap

Contact Material
- **B** Gold
- **P** Gold, matte-tin
- **Q** Silver
- **G** Gold over silver
- **R** Gold over silver, matte-tin

Seal
- **E** Epoxy

Cap Color
- **2** Black
- **NONE** Models with no cap
- **1** White

Frame Color
- **2** Black
- **NONE** Models with no frame

Dimensions are shown: Inches (mm)
Specifications and dimensions subject to change

TP Series
Tiny Pushbutton Switches

SWITCH FUNCTION

NO. POLES	MODEL NO.	SWITCH FUNCTION POS. 1	SWITCH FUNCTION POS. 2	CONNECTED TERMINALS POS. 1	CONNECTED TERMINALS POS. 2	SCHEMATIC
		C&K marking on opposite side		C&K marking on opposite side		
SP	TP11	OFF	MOM.	OPEN	1-3	SPST 1 3
	TP12	ON	MOM.	2-1	2-3	SPDT NC 1 2 (COMMON) 3 NO

SPDT

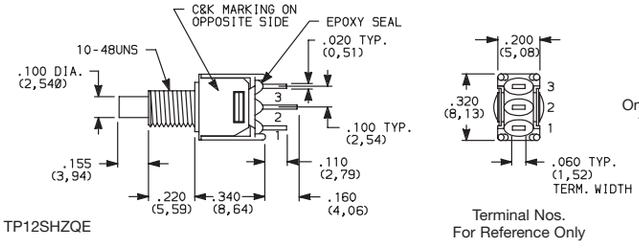

Omit terminal 2 for TP11 models.

Part number shown: TP12SHZQE

DP	TP21	OFF	MOM.	OPEN	1-3,4-6	DPST 1 3 4 6

DPST

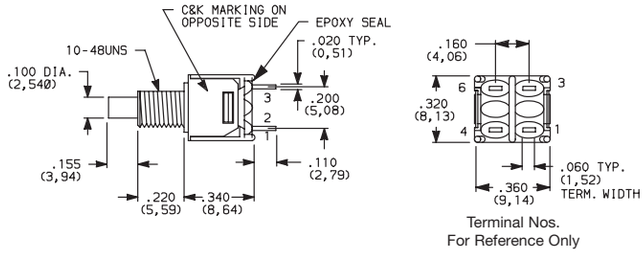

Part number shown: TP21SHZQE

MOM. = Momentary

All models ® with all options when ordered with G, Q or R contact material.

ACTUATOR—SNAP-IN FRONT MOUNT

CAP COLOR
ACTUATOR OR BUSHING
FRAME COLOR

J81 SNAP-IN WITH FRAME

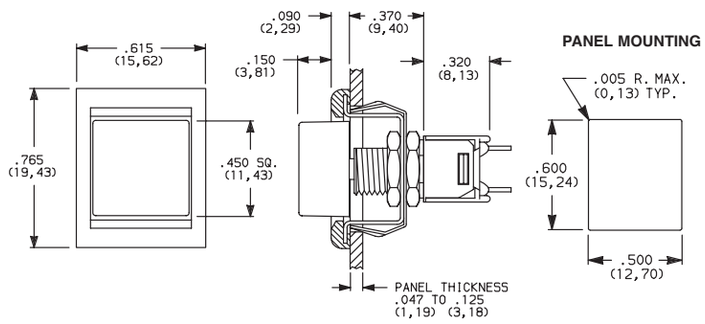

OPTION CODE	CAP COLOR
2	BLACK
1	WHITE

OPTION CODE	FRAME COLOR
2	BLACK
NONE	No Frame Color (J80 option)

Cap and Frame Finish: matte. Other colors available, consult Customer Service Center.

NOTE: Available with Z, C, or W terminations.

NOTE: Caps & frames available separately, see page A-20.

Third Angle Projection

Dimensions are shown: Inches (mm)
Specifications and dimensions subject to change

SH .155" HIGH PLUNGER, .220" HIGH BUSHING, THREADED, FLAT

SH8 .155" HIGH PLUNGER, .220" HIGH BUSHING, UNTHREADED

SH9 .155" HIGH PLUNGER, .220" HIGH BUSHING, UNTHREADED, FLAT

LT .215" HIGH PLUNGER, .310" HIGH BUSHING, THREADED

LT9 .215" HIGH PLUNGER, .310" HIGH BUSHING, UNTHREADED

MS9 .130" HIGH PLUNGER

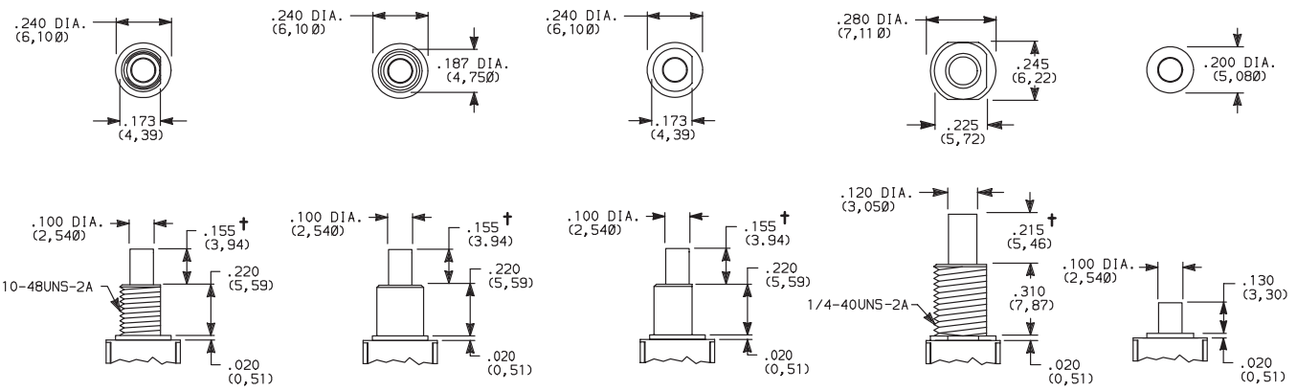

Standard with Z, C, W terminations.

Standard with A, AV, V3 terminations.

Not available with Z terminations.

† Subtract .016 (0,41) for models with A, AV or V3 terminations.

NOTE: Caps available for plunger options, see page A-20.

PANEL MOUNTING

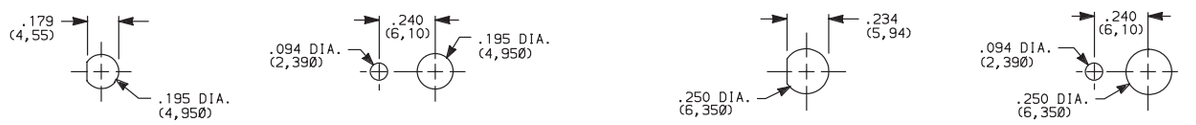

Without locking ring | With standard locking ring | Without locking ring | With standard locking rin

NOTE: One mounting nut, locking ring and lockwasher supplied standard with 10-48 threaded bushings (two nuts with 1/4-40 bushings). Optional mounting nut and locking ring styles and finishes available separately, see section "Technical Data and Additional Hardware".

TERMINATIONS

C PC THRU-HOLE

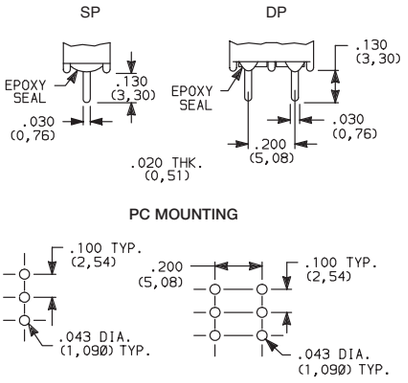

Omit center holes for TP11 models

Z SOLDER LUG

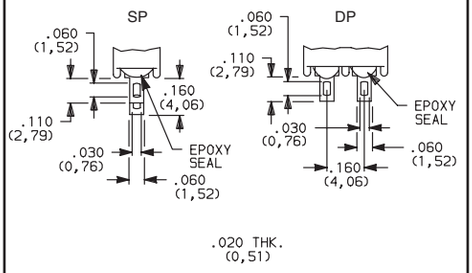

Not available with MS9 bushing or P or R contact material.

W WIRE WRAP

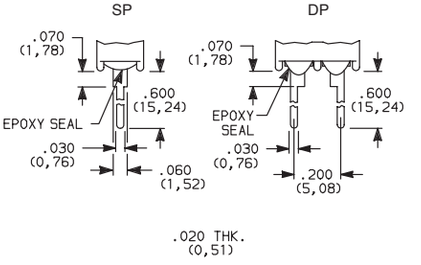

Third Angle Projection

Dimensions are shown: Inches (mm)
Specifications and dimensions subject to change

TP Series
Tiny Pushbutton Switches

TERMINATIONS

A RIGHT ANGLE, PC THRU-HOLE

TP12SH9ABE
SPDT

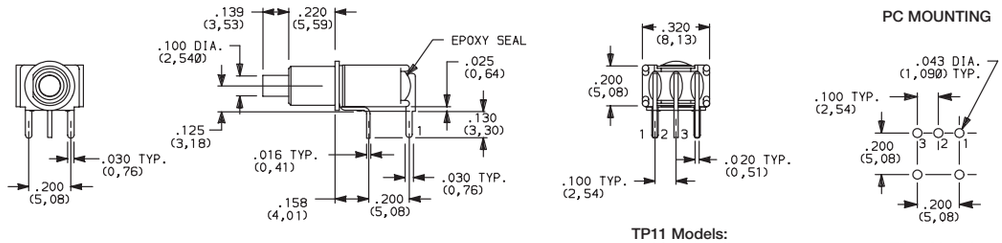

TP11 Models: omit terminal 2.

TP11 Models: omit hole 2.

A RIGHT ANGLE, PC THRU-HOLE

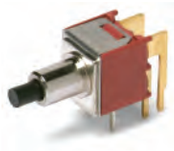

TP21SH9ABE
DPST

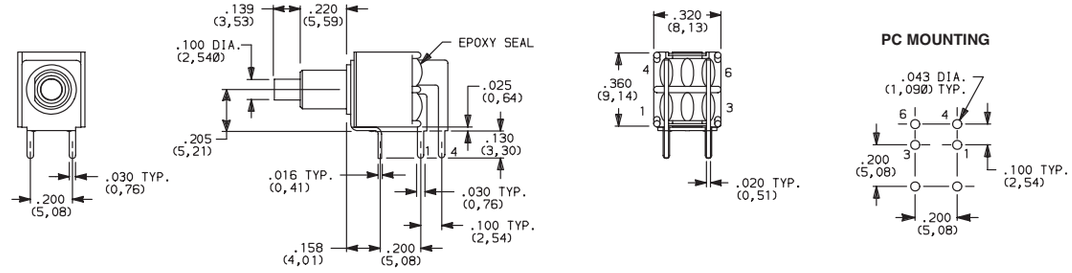

AV VERTICAL RIGHT ANGLE, PC THRU-HOLE

TP12SH9AVBE
SPDT

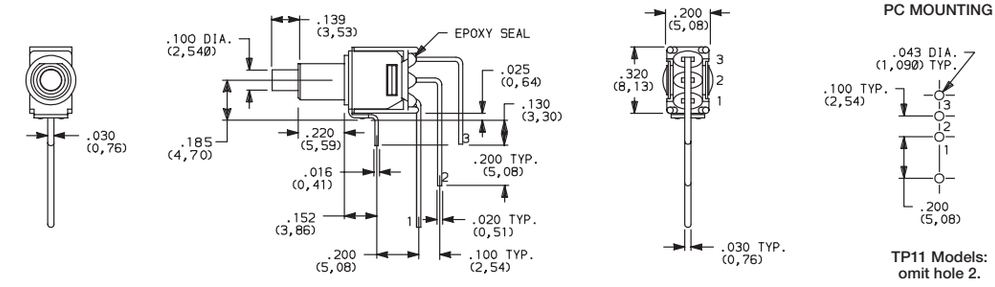

TP11 Models: omit terminal 2.

TP11 Models: omit hole 2.

NOTE: Terminal bend radii and lead-in manufacturing option.

AV VERTICAL RIGHT ANGLE, PC THRU-HOLE

TP21SH9AVBE
DPST

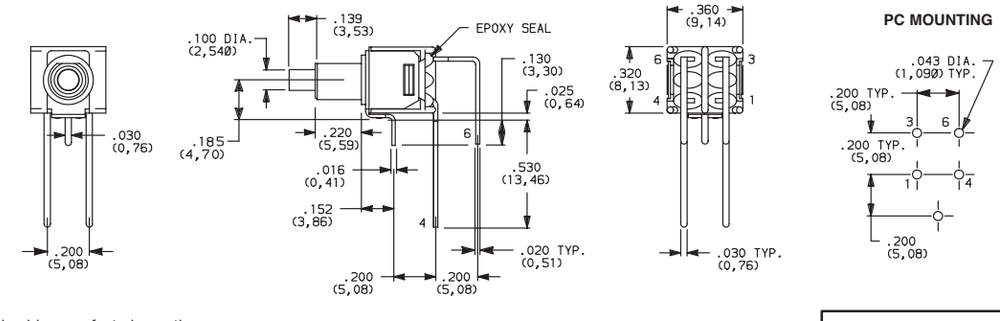

NOTE: Terminal bend radii and lead-in manufacturing option.

Third Angle Projection

Dimensions are shown: Inches (mm)
Specifications and dimensions subject to change

TERMINATIONS

V3 VERTICAL MOUNT, V-BRACKET

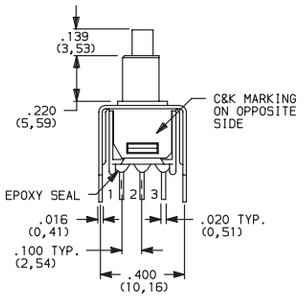

TP11 Models: omit terminal 2.

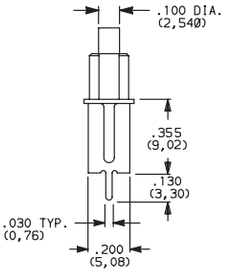

PC MOUNTING

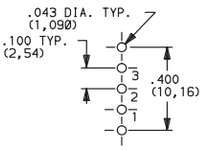

TP11 Models: omit hole 2.

TP12SH9V3BE
SPDT

V3 VERTICAL MOUNT, V-BRACKET

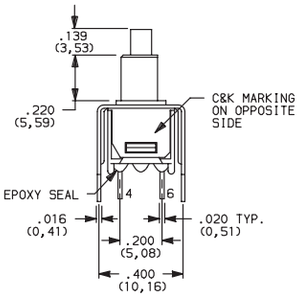

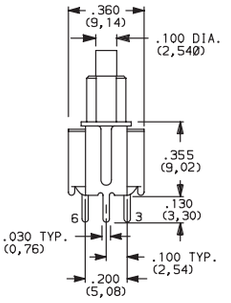

PC MOUNTING

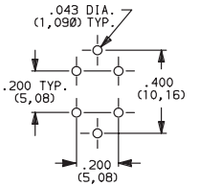

TP21SH9V3BE
DPST

CONTACT MATERIAL

OPTION CODE	CONTACT MATERIAL	TERMINAL PLATING	RATINGS	
B	GOLD [1]	GOLD [1]	LOW LEVEL/DRY CIRCUIT	0.4 VA MAX. @ 20 V AC OR DC MAX.
P		MATTE-TIN [6]		
Q	SILVER [4,5]	SILVER [5]	POWER	1 AMP @ 120 V AC OR 28 V DC.
G	GOLD OVER SILVER [2,3]	GOLD [3]	LOW LEVEL/DRY CIRCUIT OR POWER	0.4 VA MAX @ 20 V AC OR DC MAX. OR 1 AMP @ 120 V AC OR 28 V DC.
R		MATTE-TIN [6]		

* Note: See Technical Data section of this catalog for RoHS compliant and compatible definitions and specifications.

[1] CONTACTS & TERMINALS: Copper alloy, with gold plate over nickel plate.
[2] END CONTACTS: Coin silver, with gold plate over nickel plate.
[3] CENTER CONTACTS & ALL TERMINALS: Copper alloy, with gold plate over nickel plate.
[4] END CONTACTS: Coin silver, silver plated.
[5] CENTER CONTACT & ALL TERMINALS: Copper alloy, silver plated.
[6] TERMINALS: Copper alloy, with matte-tin over nickel plate.

NOTE: Any models supplied with P, R, Q, B or G contact material are RoHS compliant.

All models with all options when ordered with R, G, or Q contact material.
B contact material standard with A, AV, V3 & W terminations.
Q contact material standard with C & Z terminations
P, R contact materials not available with Z terminations.

SEAL

E EPOXY SEAL

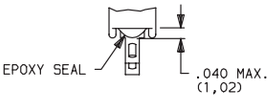

Third Angle Projection

Dimensions are shown: Inches (mm)
Specifications and dimensions subject to change

TP Series
Tiny Pushbutton Switches

AVAILABLE HARDWARE

Cap, .100" DIA. Plungers

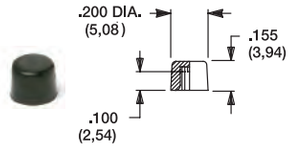

PART NO.

508101000 WHITE
508102000 BLACK

Material: Nylon
Finish: Gloss

Cap, .100" DIA. Plungers
(Recommended for S9 plunger)

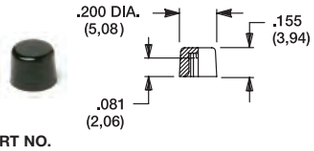

PART NO.

538701000 WHITE
538702000 BLACK

Material: Nylon
Finish: Gloss

Cap, .100" DIA. Plungers

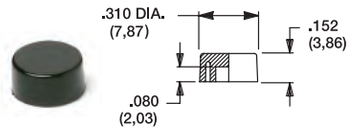

PART NO.

465801000 WHITE
465802000 BLACK

Material: Nylon
Finish: Gloss

Cap, .120" DIA. Plungers

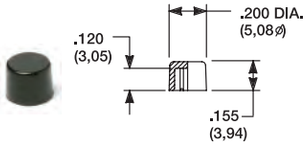

PART NO.

708901000 WHITE
708902000 BLACK

Material: Nylon
Finish: Gloss

Cap, .120" DIA. Plungers

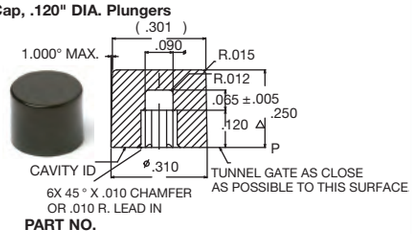

PART NO.

891D01000 WHITE
891D02000 BLACK

Material: Nylon
Finish: Gloss

Cap, J81 option only

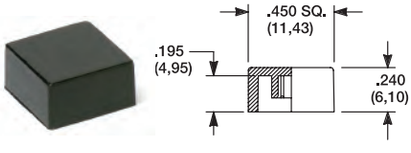

PART NO.

484601000 WHITE
484602000 BLACK

Material: Nylon
Finish: Gloss

PART NO.

798201000 WHITE
798202263 BLACK

Material: Nylon
Finish: Matte

NOTE: Additional nuts, locking rings and lockwashers available separately, see section "Technical Data and Additional Hardware".
Other cap colors available, consult Customer Service Center.

Frames snap into panel opening and are independent from switch mounting. Accurate positioning of the PC mounted switch relative to the panel opening is necessary to provide proper clearance between actuator and frame. Available in two basic styles and four panel thicknesses .047-.125 in. Material: Nylon. Finish: Matte.

TYPICAL APPLICATION

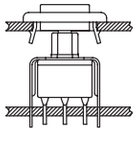

.047" (1,19) PANEL THK.	.062" (1,57) PANEL THK.	.090" (2,29) PANEL THK.	.125" (3,18) PANEL THK.
PART NO.	**PART NO.**	**PART NO.**	**PART NO.**
432502263	**432602263**	**432702263**	**432802263** BLACK

PANEL MOUNTING

For part numbers
432502263, 432602263

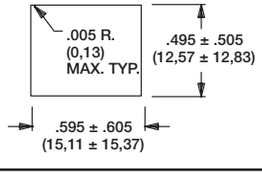

For part numbers
432702263, 432802263

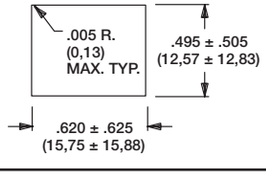

Panel Inserts

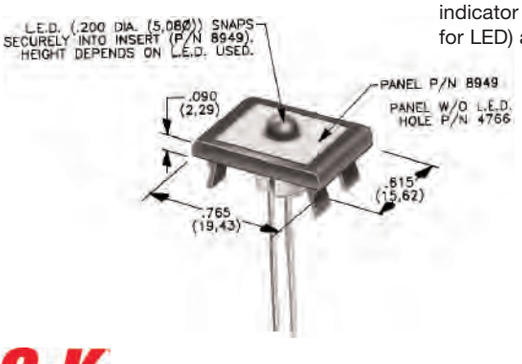

Above frames (part nos. 432XXXXXX) are also available with insert which accepts LED for indicator light assembly. Order insert separately from frame. Blank insert panel (without hole for LED) also available. **LED not included.**

PANEL INSERT WITH HOLE FOR LED	BLANK PANEL INSERT WITHOUT HOLE FOR LED
PART NO.	**PART NO.**
894902000	**476602000** BLACK

Third Angle Projection

Dimensions are shown: Inches (mm)
Specifications and dimensions subject to change

E020 Series
Sealed Snap-acting Momentary Pushbutton Switches

Features/Benefits

- ***Process sealed with disposable splashproof boot***
- ***Long life contact design***
- ***Snap-fitting plunger available***
- ***RoHS compliant models available***

Typical Applications

- ***Instrumentation***
- ***Telecommunications and networking equipment***
- ***Computers and peripherals***

Models Available

Specifications

CONTACT RATING: B contact material (EX25 Models): 0.4 VA max. @ 20 V AC or DC max. G contact material (EX21 Models): 1 AMP @120 V AC or 28 V DC or 0.4 VA max. @ 20 V AC or DC max. Note: Break-before-make contacts. Multi-pole contacts do not make and break simultaneously. See page A-26 for additional ratings.

ELECTRICAL LIFE: 60,000 make-and-break cycles at full load.

CONTACT RESISTANCE: Below 50 mΩ typ. initial @ 2–4 V DC, 100 mA, for both silver and gold plated contacts.

INSULATION RESISTANCE: 10^9Ω min.

DIELECTRIC STRENGTH: 1000 Vrms min. @ sea level.

OPERATING TEMPERATURE: –30°C to 75°C.

CAP INSTALLATION FORCE: 10 lbs. max. permissible.

SOLDERABILITY: Per MIL-STD-202F method 208D, or EIA RS-186E method 9 (1 hour steam aging).

NOTE: Any models supplied with P, R, B or G contact material are RoHS compliant.

NOTE: Specifications and materials listed above are for switches with standard options. For information on specific and custom switches, consult Customer Service Center.

Materials

CASE & BUSHING: Glass filled nylon 6/6, flame retardant (UL 94V-0).

PLUNGER: Glass filled nylon or glass filled polyester (PBT) (UL 94V-0).

SWITCH SUPPORT: Brass or steel, matte-tin.

SWITCH SUPPORT RETAINER: Stainless steel.

N.O. & N.C. CONTACTS: EX25 MODELS: B contact material: Copper alloy, with gold plate over nickel plate. EX21 MODELS: G contact material: Coin silver, with gold plate over nickel plate. See page A-26 for additional contact materials.

COMMON CONTACTS & ALL TERMINALS: Copper alloy, with gold plate over nickel plate. See page A-26 for additional contact materials.

TERMINAL SEAL: Epoxy.

DISPOSABLE BOOT: Vinyl splashproof boot supplied standard. Remove and discard only after soldering and cleaning processes are complete.

Build-A-Switch

To order, simply select desired option from each category and place in the appropriate box. Available options are shown and described on pages A-22 thru A-28. For additional options not shown in catalog, consult our Customer Service Center. All models are process sealed to withstand machine soldering temperatures and pressure wash cleaning methods.

Switch Function
- **E121** SPDT On-Mom. 1 Amp
- **E221** DPDT On-Mom. 1 Amp
- **E125** SPDT On-Mom. 0.4VA
- **E225** DPDT On-Mom. 0.4VA

Plunger
- **S** .282" high
- **M** .331" high, snap-fitting
- **S1** .332" high

Bushing
- **D1** Unthreaded
- **D3** .180" high, unthreaded

Terminations
- **A** Right angle, PC thru-hole
- **AV2** Vertical right angle, PC thru-hole
- **C** PC Thru-hole
- **A3** Right angle, snap-in, PC thru-hole
- **AV3** Vertical right angle, snap-in, PC thru-hole
- **V3** .460" high, V-bracket
- **V4** .630" high, V-bracket
- **V6** .460" high, V-bracket
- **V8** .953" high, V-bracket
- **V31** .460" high, snap-in V-bracket
- **V41** .630" high, snap-in V-bracket
- **V61** .460" high, snap-in V-bracket

Contact Material
- **B** Gold
- **G** Gold over silver
- **P** Gold, matte-tin
- **R** Gold over silver, matte-tin

Seal
- **E** Epoxy and disposable splashproof boot

Dimensions are shown: Inches (mm)
Specifications and dimensions subject to change

E020 Series
Sealed Snap-acting Momentary Pushbutton Switches

SWITCH FUNCTION

NO. POLES	MODEL NO.	SWITCH FUNCTION POS. 1 (C&K marking this side)	SWITCH FUNCTION POS. 2 (C&K marking this side)	CONNECTED TERMINALS POS. 1 (C&K marking this side)	CONNECTED TERMINALS POS. 2 (C&K marking this side)	SCHEMATIC
SP	E121	ON	MOM.	1-3	1-2	SPDT
	E125	ON	MOM.			
DP	E221	ON	MOM.	1-3,4-6	1-2,4-5	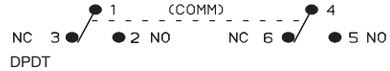 DPDT
	E225	ON	MOM.			

SPDT

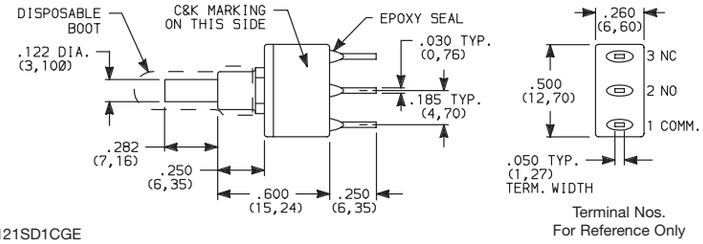

Part number shown: E121SD1CGE

DPDT

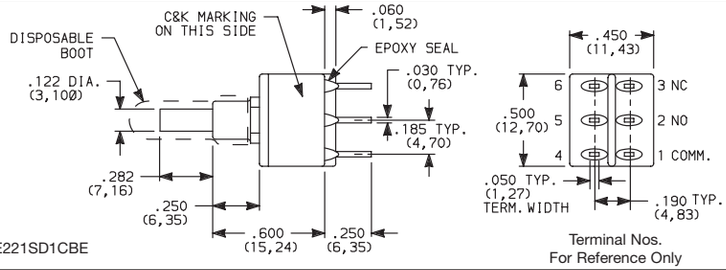

Part number shown: E221SD1CBE

MOM. = Momentary

E121, E221 models with all options when ordered with G or R contact material.

EX25 models must be ordered with B or P contact material.
EX21 models must be ordered with G or R contact material.

PLUNGER

S .282" HIGH

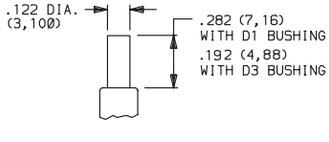

S1 .332" HIGH

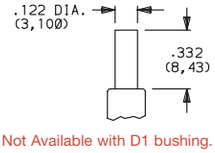

Not Available with D1 bushing.

M .332" HIGH SNAP-FITTING

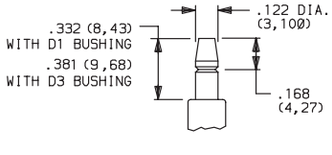

NOTE: Caps available for all plunger options, see page A-27.

BUSHING

D1 UNTHREADED

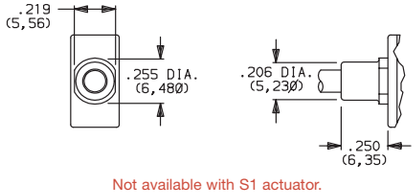

Not available with S1 actuator.

D3 .180" HIGH UNTHREADED

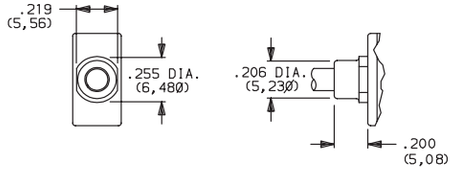

NOTE: Disposable splashproof vinyl over actuator and bushing supplied std., see page A-26.

Third Angle Projection

Dimensions are shown: Inches (mm)
Specifications and dimensions subject to change

TERMINATIONS

C PC THRU-HOLE

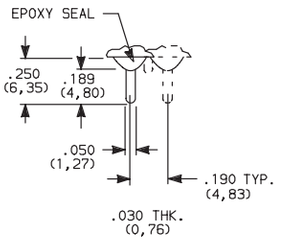

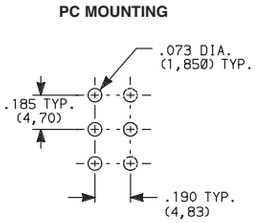

SPDT and DPDT

A RIGHT ANGLE, PC THRU-HOLE

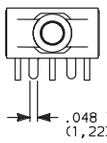

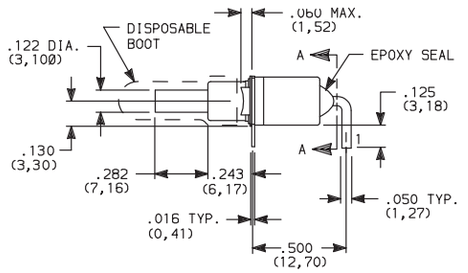

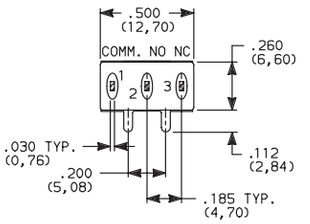

SECTION A-A

E121SD1AGE
SPDT

A3 RIGHT ANGLE, SNAP-IN, PC THRU-HOLE

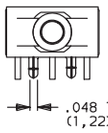

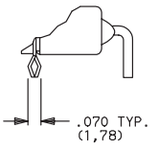

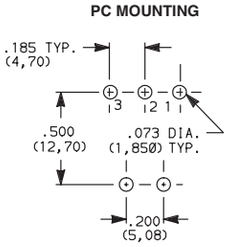

NOTE: Terminal bend radii and lead-in manufacturing option.

A RIGHT ANGLE, PC THRU-HOLE

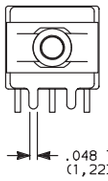

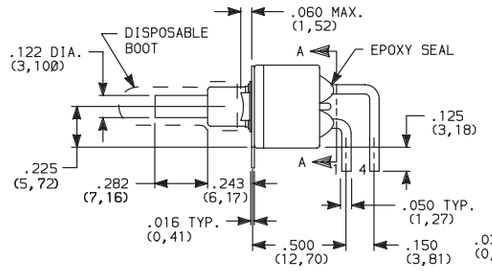

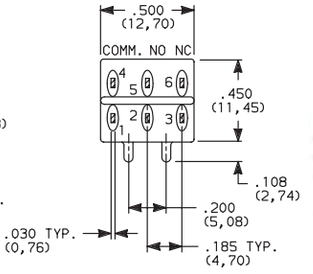

SECTION A-A

E221SD1AGE
DPDT

A3 RIGHT ANGLE, SNAP-IN, PC THRU-HOLE

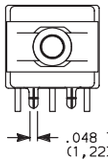

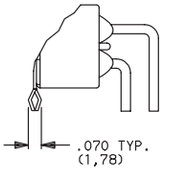

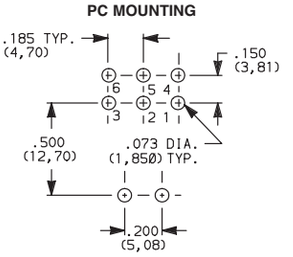

NOTE: Terminal bend radii and lead-in manufacturing option.

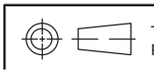

Third Angle Projection

Dimensions are shown: Inches (mm)
Specifications and dimensions subject to change

E020 Series
Sealed Snap-acting Momentary Pushbutton Switches

TERMINATIONS

AV2
VERTICAL RIGHT ANGLE, PC THRU-HOLE,
.150" PITCH

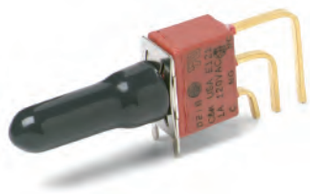

E121SD1AV2GE
SPDT

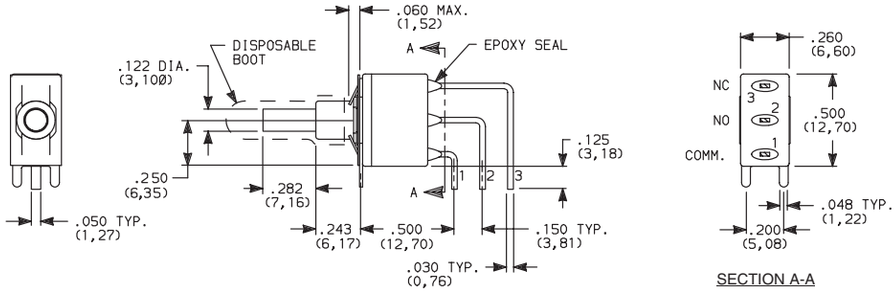

AV3
VERTICAL RIGHT ANGLE, SNAP-IN, PC THRU-HOLE,
.150" PITCH

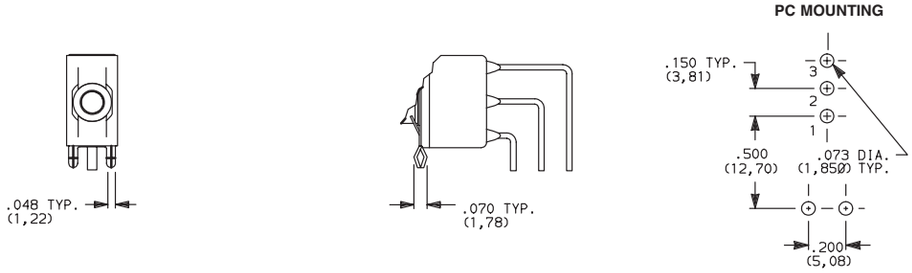

NOTE: Terminal bend radii and lead-in manufacturing option.

AV2
VERTICAL RIGHT ANGLE, PC THRU-HOLE,
.150" PITCH

E221SD1AV2GE
DPDT

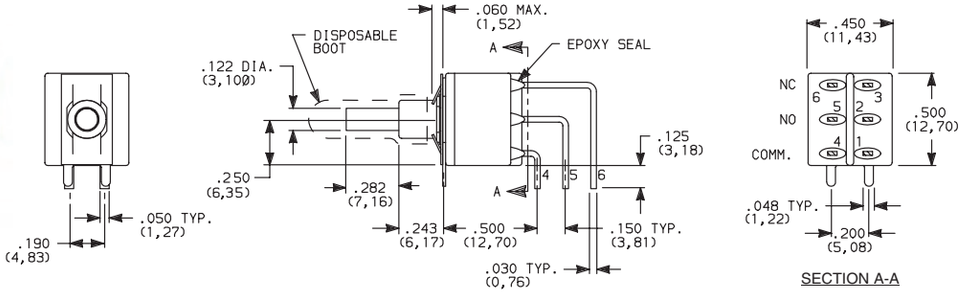

AV3
VERTICAL RIGHT ANGLE, SNAP-IN, PC THRU-HOLE,
.150" PITCH

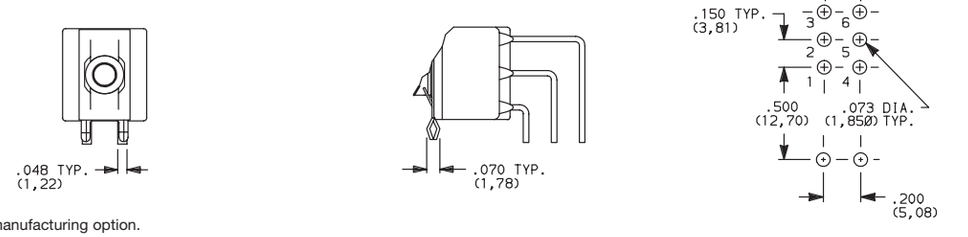

NOTE: Terminal bend radii and lead-in manufacturing option.

Third Angle Projection

Dimensions are shown: Inches (mm)
Specifications and dimensions subject to change

TERMINATIONS

V3, V4 VERTICAL MOUNT, V-BRACKET

V31, V41 VERTICAL MOUNT, V-BRACKET, SNAP-IN

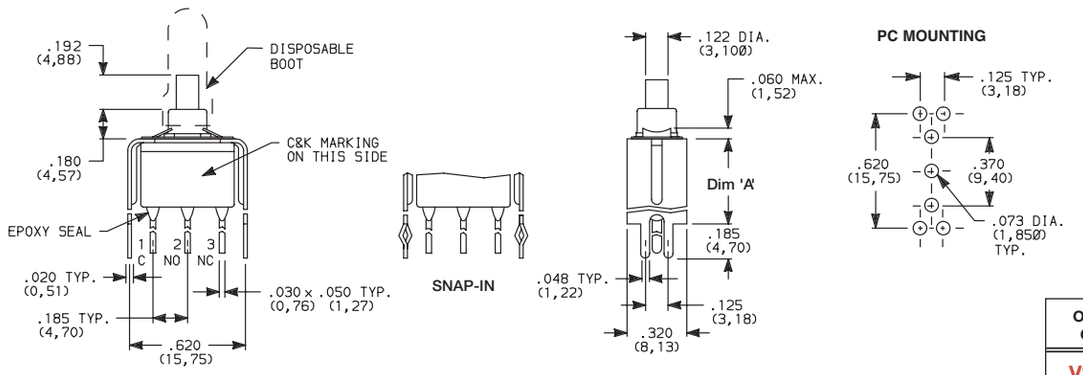

E121SD3__GE
SPDT

OPTION CODE	DIM 'A'
V3, V31	.460 (11,68)
V4, V41	.630 (16,00)

V3, V4 VERTICAL MOUNT, V-BRACKET

V31, V41 VERTICAL MOUNT, V-BRACKET, SNAP-IN

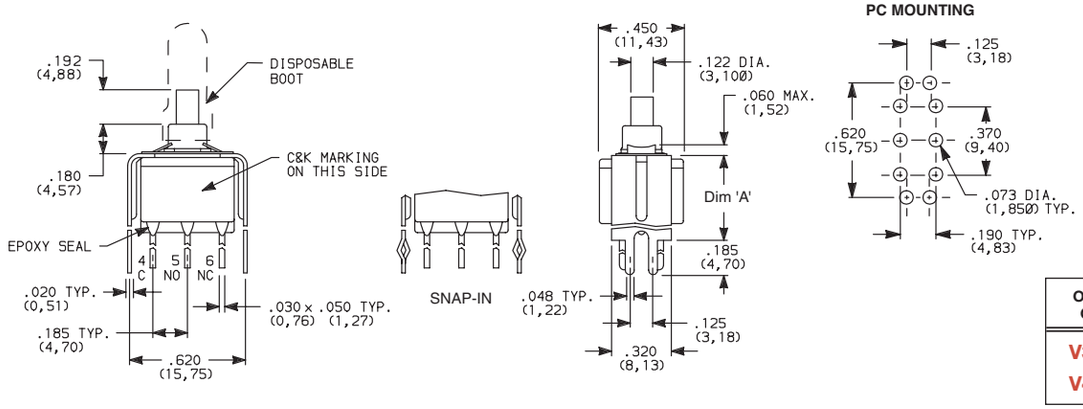

E221SD3__GE
DPDT

OPTION CODE	DIM 'A'
V3, V31	.460 (11,68)
V4, V41	.630 (16,00)

V6, V8 VERTICAL MOUNT, V-BRACKET

V61, V81 VERTICAL MOUNT, V-BRACKET, SNAP-IN

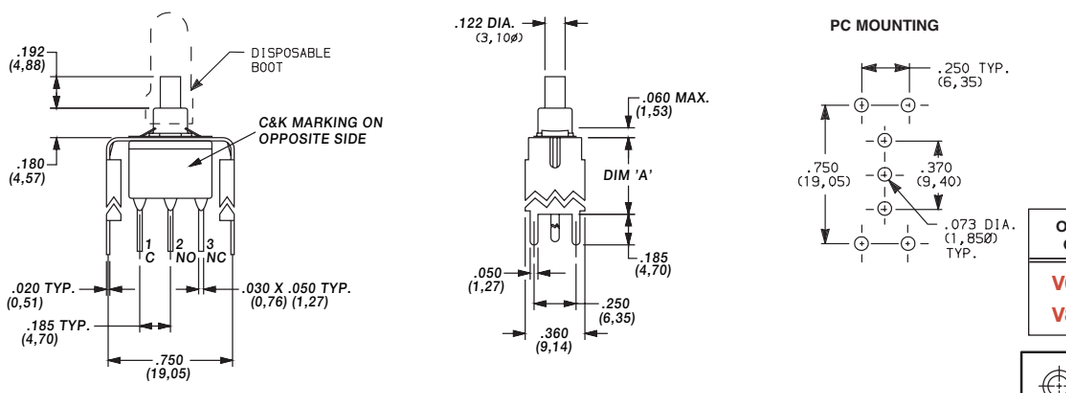

E121SD3__GE
SPDT

OPTION CODE	DIM 'A'
V6, V61	.460 (11,68)
V8, V81	.953 (24,21)

Third Angle Projection

Dimensions are shown: Inches (mm)
Specifications and dimensions subject to change

E020 Series
Sealed Snap-acting Momentary Pushbutton Switches

TERMINATIONS

V6, V8 VERTICAL MOUNT, V-BRACKET

V61, V81 VERTICAL MOUNT, V-BRACKET, SNAP-IN

E221SD3V6GE
DPDT

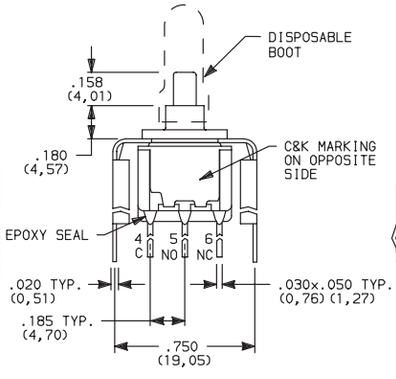

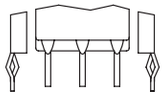

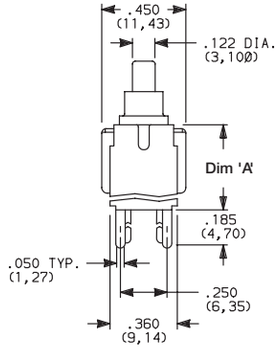

PC MOUNTING

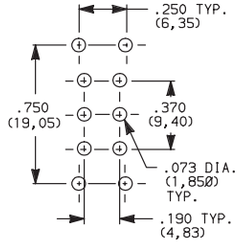

OPTION CODE	DIM 'A'
V6, V61	.460 (11,68)
V8, V81	.953 (24,21)

CONTACT MATERIAL

OPTION CODE	CONTACT MATERIAL	TERMINAL PLATING	RATINGS	
B	GOLD [1]	GOLD [1]	LOW LEVEL/DRY CIRCUIT	EX25 MODELS ONLY: 0.4 VA MAX. @ 20 V AC OR DC MAX.
P		MATTE-TIN [4]		
G	GOLD OVER SILVER [2,3]	GOLD [3]	LOW LEVEL/DRY CIRCUIT OR POWER	EX21 MODELS ONLY: 0.4 VA MAX @ 20 V AC OR DC MAX. OR 1 AMP @ 120 V AC OR 28 V DC.
R		MATTE-TIN [4]		

* Note: See Technical Data section of this catalog for RoHS compliant and compatible definitions and specifications.

[1] CONTACTS & TERMINALS: Copper alloy, with gold plate over nickel plate.
[2] N.O. AND N.C. CONTACTS: Coin silver, with gold plate over nickel plate.
[3] COMMON CONTACTS & ALL TERMINALS: Copper alloy, with gold plate over nickel plate.
[4] TERMINALS: Copper alloy, with matte-tin alloy over nickel plate.

NOTE: Any models supplied with P, R, B or G contact material are RoHS compliant.

E121, E221 models c UL us with all options when ordered with mandatory G, or R contact material.

P or B contact material must be ordered with EX25 models.

R or G contact material must be ordered with EX21 models.

SEAL

E EPOXY SEAL AND DISPOSABLE SPLASHPROOF BOOT

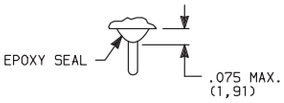

Disposable splashproof boot supplied standard. Remove and discard boot *only after* soldering and cleaning processes are complete.

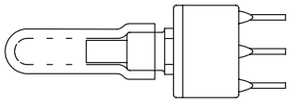

Third Angle Projection

Dimensions are shown: Inches (mm)
Specifications and dimensions subject to change

AVAILABLE HARDWARE

Cap

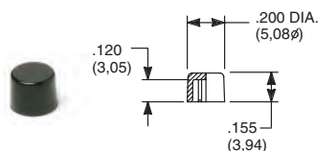

PART NO.

708901000	WHITE
708902000	BLACK
708903000	RED

Material: Nylon
Finish: Gloss

Cap

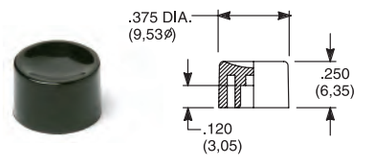

PART NO.

752701000	WHITE
752702000	BLACK
752703000	RED

Material: Nylon
Finish: Gloss

Cap

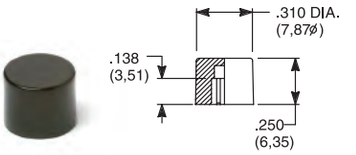

PART NO.

801801000	WHITE
801802000	BLACK
801803000	RED

Material: Nylon
Finish: Gloss

Cap, Snap-fitting plunger

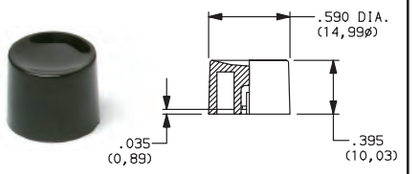

PART NO.

452D01000	WHITE
452D02000	BLACK
452D03000	RED

Material: Nylon
Finish: Gloss

Cap, Snap-fitting plunger

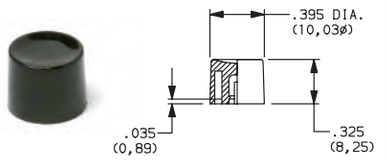

PART NO.

894101000	WHITE
894102000	BLACK
894103000	RED

Material: Nylon
Finish: Gloss

Cap

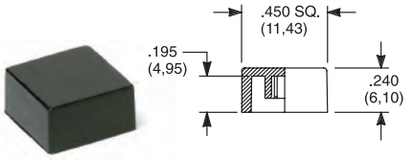

PART NO.

484601000	WHITE
484602000	BLACK
484603000	RED

Material: Nylon
Finish: Gloss

PART NO.

798201000	WHITE
798202263	BLACK
798203000	RED

Material: Nylon
Finish: Matte

NOTE: Other cap colors available, consult Customer Service Center.

Frames snap into panel opening and are independent from switch mounting. Accurate positioning of the PC mounted switch relative to the panel opening is necessary to provide proper clearance between actuator and frame. Available in two basic styles and four panel thicknesses .047-.125 in. Material: Nylon. Finish: Matte.

TYPICAL APPLICATION

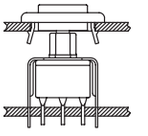

.047" (1,19) PANEL THK.	.062" (1,57) PANEL THK.	.090" (2,29) PANEL THK.	.125" (3,18) PANEL THK.
PART NO.	**PART NO.**	**PART NO.**	**PART NO.**
432502263	432602263	432702263	432802263 BLACK

PANEL MOUNTING

For part numbers
4325xxxxx, 4326xxxxx

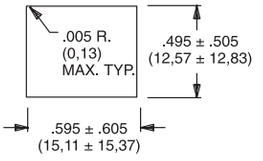

For part numbers
4327xxxxx, 4328xxxxx

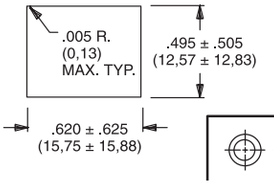

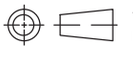

Third Angle Projection

Dimensions are shown: Inches (mm)
Specifications and dimensions subject to change

E020 Series
Sealed Snap-acting Momentary Pushbutton Switches

AVAILABLE HARDWARE

PANEL INSERTS

Above frames (part nos. 432XXXXXX) are also available with insert which accepts LED for indicator light assembly. Order insert separately from frame. Blank insert panel (without hole for LED) also available. **LED not included.**

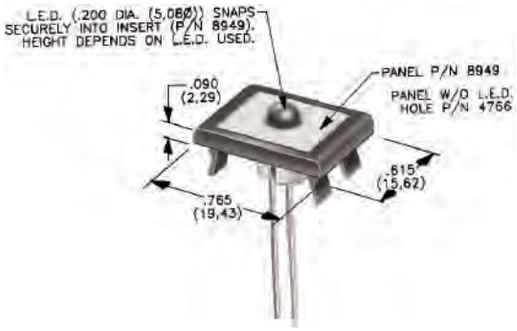

PANEL INSERT WITH HOLE FOR LED	BLANK PANEL INSERT WITHOUT HOLE FOR LED	
PART NO.	**PART NO.**	
894902000	476602000	BLACK

Special colors, custom markings available, consult Customer Service Center.

Third Angle Projection

Dimensions are shown: Inches (mm)
Specifications and dimensions subject to change

8020 Series
Snap-acting Momentary Pushbutton Switches

Features/Benefits

- ***Positive tactile feel***
- ***Multi-positions available***
- ***Wide variety of termination options***
- ***Epoxy terminal seal compatible with bottom wash cleaning***
- ***RoHS compliant models available***

Models Available

Typical Applications

- ***Instrumentation***
- ***Computer peripherals***
- ***Telecommunications equipment***

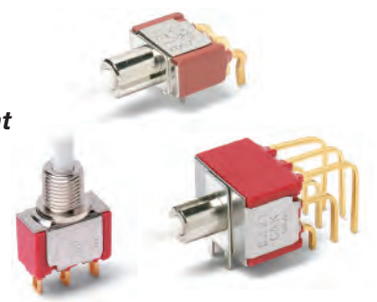

Specifications

CONTACT RATING: B contact material (8X25 Models): 0.4 VA max. @ 20 V AC or DC maximum. G contact material (8X21, U8X1 Models): 1 AMP @ 120 V AC or 28 V DC or 0.4 VA max. @ 20 V AC or DC max. Note: Break-before-makecontacts. Multi-pole contacts do not make and break simultaneously. See page A-43 for additional ratings.

ELECTRICAL LIFE: 60,000 make-and-break cycles at full load.

CONTACT RESISTANCE: Below 50 mΩ typ. initial @ 2-4 V DC, 100 mA, for both silver and gold plated contacts.

INSULATION RESISTANCE: 10^9Ω min.

DIELECTRIC STRENGTH: 1,000 Vrms min. @ sea level.

OPERATING TEMPERATURE: 8X2X MODELS: –30°C to 75°C. U8X1 MODELS: –30°C to 65°C.

CAP INSTALLATION FORCE: 10 lbs. max. permissible.

SOLDERABILITY: Per MIL-STD-202F method 208D, or EIA RS-186E method 9 (1 hour steam aging).

NOTE: Any models supplied with B, P, R, or G contact material are RoHS compliant.

NOTE: Specifications and materials listed above are for switches with standard options. For information on specific and custom switches, consult Customer Service Center.

Materials

CASE: Glass filled nylon 6/6 or diallyl phthalate (DAP), flame retardant (UL 94V-0).

PLUNGER: Glass filled nylon or glass filled polyester (PBT) (UL 94V-0).

CAP & FRAME: Nylon, black, standard.

BUSHING: Brass or zinc, nickel plated.

HOUSING: Stainless steel.

SWITCH SUPPORT: Brass or steel, matte-tin plated.

N.O. & N.C. CONTACTS: 8X21, U8X1 MODELS: G contact material: Coin silver, with gold plate over nickel plate. See page A-43 for additional contact materials.
8X25 MODELS: B contact material: Copper alloy, with gold plate over nickel plate. See page A-43 for additional contact materials.

COMMON CONTACT & ALL TERMINALS: Copper alloy, with gold plate over nickel plate.

TERMINAL SEAL: Epoxy. Refer to soldering and cleaning Technical Data Chapter.

HARDWARE: Nut & Locking Ring: Brass, nickel plated; Lockwasher: Steel, nickel plated.

Build-A-Switch

To order, simply select desired option from each category and place in the appropriate box. Available options are shown and described on pages A-30 thru A-45. For additional options not shown in catalog, consult Customer Service Center. All models have epoxy terminal seal and are compatible with all "bottom-wash" PCB cleaning methods.

Switch Function
- **8121** SPDT On-Mom. 1 Amp
- **8125** SPDT On-Mom. 0.4VA
- **8221** DPDT On-Mom. 1 Amp
- **8225** DPDT On-Mom. 0.4VA
- **8321** 3PDT On-Mom. 1 Amp
- **8325** 3PDT On-Mom. 0.4VA
- **8421** 4PDT On-Mom. 1 Amp
- **8425** 4PDT On-Mom. 0.4VA

Note: UL models available, see page A-30 and A-31.

Actuator or Plunger
- **S** Plunger
- **NONE** Snap-in
- **J80** Snap-in
- **J81** Snap-in w/frame
- **J82** Snap-in w/frame for LED
- **J83** Snap-in w/frame & flush cap
- **J84** Snap-in w/frame for LED, flush cap
- **J85** Snap-in w/frame & LED
- **J95** PC w/V-bracket & LED
- **L** Plunger
- **M** Snap-fitting plunger

Bushing
- **D9** .280" high, keyway
- **H** .250" high, flat
- **NONE** No bushing choice required
- **D** .280" high, keyway
- **D2** .288" high, flat
- **D3** .180" high
- **D8** .288" high, flat
- **H9** .250" high, flat, hi torque
- **Y** .350" high, keyway
- **Y3** 6.35mm high, keyway, hi torque
- **Y4** .378" high, flat, hi torque
- **Y9** .350" high, keyway

Contact Material
- **B** Gold
- **P** Gold, matte-tin
- **G** Gold over silver
- **R** Gold over silver, matte-tin

Seal
- **E** Epoxy
- **I** Epoxy potted base

Cap Color
- **2** Black
- **NONE** Models without caps
- **1** White
- **3** Red
- **4** Orange
- **5** Yellow
- **6** Green
- **7** Blue
- **9** Gray

Frame Color
- **2** Black
- **NONE** Models without frame
- **1** White
- **3** Red
- **5** Yellow
- **6** Green
- **9** Gray

LED Color
- **3** Red
- **NONE** Models without LED
- **5** Yellow
- **6** Green

Terminations
- **A** Right angle, PC thru-hole
- **AV2** Vertical right angle, PC thru-hole
- **C** PC Thru-hole
- **Z** Solder lug
- **A2** Right angle, PC thru-hole
- **A3** Right angle, snap-in, PC thru-hole
- **A4** Right angle, PC thru-hole, reversed terminals
- **A6** Right angle, PC thru-hole
- **AV1** Vertical right angle, PC thru-hole
- **AV3** Vertical right angle, snap-in, PC thru-hole
- **R** Right angle with PCB
- **R2** Right angle with PCB, reversed terminals
- **V2** .555" high, V-bracket
- **V3** .460" high, V-bracket
- **V4** .630" high, V-bracket
- **V6** .460" high, V-bracket
- **V7** .630" high, V-bracket
- **V8** .953" high, V-bracket
- **V9** 1.150" high, V-bracket
- **V31** .460" high, snap-in V-bracket
- **V61** .460" high, snap-in V-bracket
- **W** .750" long, wire wrap
- **W1** .964" long, wire wrap
- **W3** .425" long, wire wrap
- **W4** 1.062" long, wire wrap
- **Z3** Quick connect

Dimensions are shown: Inches (mm)
Specifications and dimensions subject to change

8020 Series
Snap-acting Momentary Pushbutton Switches

SWITCH FUNCTION

NO. POLES	MODEL NO.	UL/CSA* MODEL NO.	SWITCH FUNCTION POS. 1 (C&K marking on opposite side)	SWITCH FUNCTION POS. 2	CONNECTED TERMINALS POS. 1 (C&K marking on opposite side)	CONNECTED TERMINALS POS. 2	SCHEMATIC
SP	8121	U811	ON	MOM.	1-3	1-2	SPDT
	8125		ON	MOM.			

SPDT

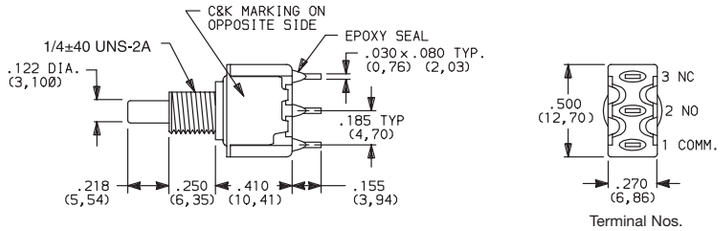

Part number shown: 8121SHZGE

Terminal Nos. For Reference Only

DP	8221	U821	ON	MOM.	1-3,4-6	1-2,4-5	DPDT
	8225		ON	MOM.			

DPDT

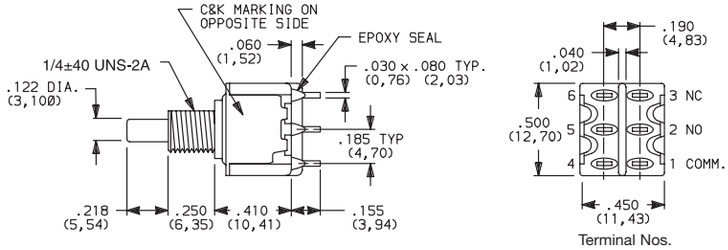

Part number shown: 8221SHZGE

Terminal Nos. For Reference Only

3P	8321	U831	ON	MOM.	1-3,4-6,7-9	1-2,4-5,7-8	3PDT
	8325		ON	MOM.			

3PDT

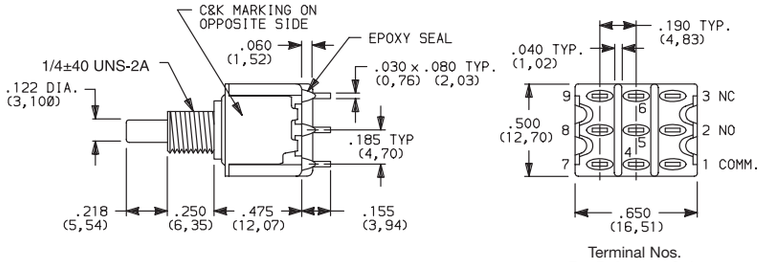

Part number shown: 8321SHZGE

Terminal Nos. For Reference Only

MOM. = Momentary

*U811 thru U841 model numbers c UL us with all options (except R, R2 terminations) when ordered with G or R contact material.

8X25 models must be ordered with B or P contact material.

8X21 and U8X1 models must be ordered with G or R contact material.

Third Angle Projection

Dimensions are shown: Inches (mm)
Specifications and dimensions subject to change

8020 Series
Snap-acting Momentary Pushbutton Switches

SWITCH FUNCTION

NO. POLES	MODEL NO.	UL/CSA* MODEL NO.	SWITCH FUNCTION POS. 1	SWITCH FUNCTION POS. 2	CONNECTED TERMINALS POS. 1	CONNECTED TERMINALS POS. 2	SCHEMATIC
			C&K marking on opposite side		C&K marking on opposite side		
4P	8421	U841	ON	MOM.	1-3,4-6,7-9,10-12	1-2,4-5,7-8,10-11	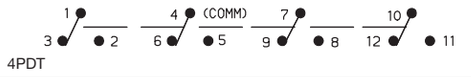
	8425		ON	MOM.			

4PDT

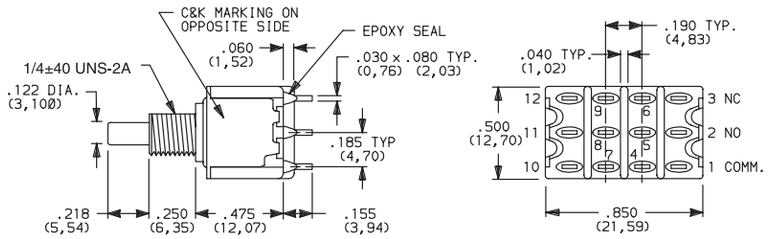

Part number shown: 8421SHZGE

Terminal Nos.
For Reference Only

MOM. = Momentary

* U811 thru U841 model numbers c UL us with all options (except R, R2 terminations) when ordered with G or R contact material.

8X25 models must be ordered with B or P contact material.

8X21 and U8X1 models must be ordered with G or R contact material.

ACTUATOR—SNAP-IN FRONT MOUNT

CAP COLOR
ACTUATOR OR PLUNGER
FRAME COLOR

OPTION CODE	CAP AND FRAME COLOR
2	BLACK
NONE	No Frame Color (J80 option)
1	WHITE
3	RED
4	ORANGE
5	YELLOW
6	GREEN
7	BLUE
9	GRAY

Other colors available, consult Customer Service Center. Cap and Frame Finish: matte.

NOTE: Caps and frames available separately, see pages A-44 and A-45.

J80 SNAP-IN

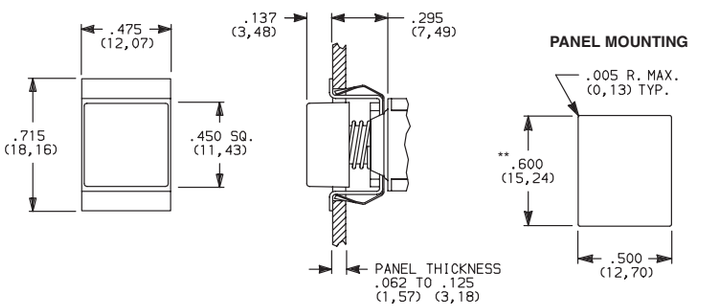

NOTE: No frame color choice required.

** Increase this dim. to .620/.625 (15,75/15,88) for .091/.125 (2,31/3,18) thk. panels.

J81 SNAP-IN WITH FRAME

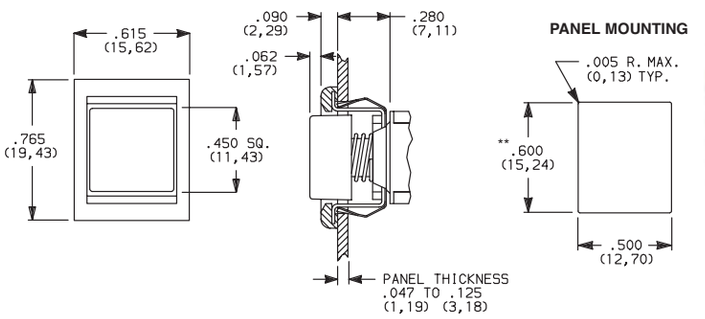

NOTE: Available with C, W-W4, Z or Z3 terminations and SPDT and DPDT models only.

** Increase this dim. to .620/.625 (15,75/15,88) for .091/.125 (2,31/3,18) thk. panels.

Third Angle Projection

Dimensions are shown: Inches (mm)
Specifications and dimensions subject to change

8020 Series
Snap-acting Momentary Pushbutton Switches

ACTUATOR—SNAP-IN FRONT MOUNT

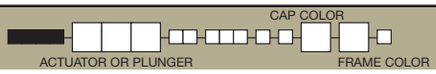

J83 SNAP-IN WITH FRAME AND FLUSH CAP

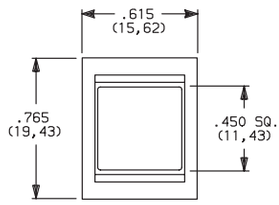

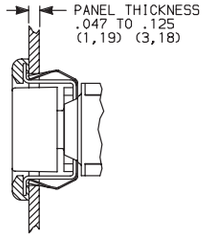

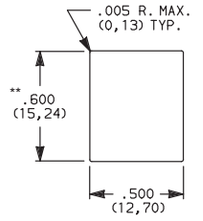

J82 SNAP-IN WITH FRAME FOR LED

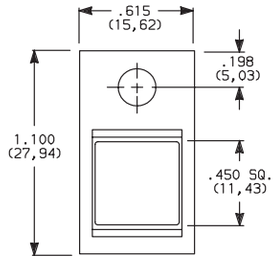

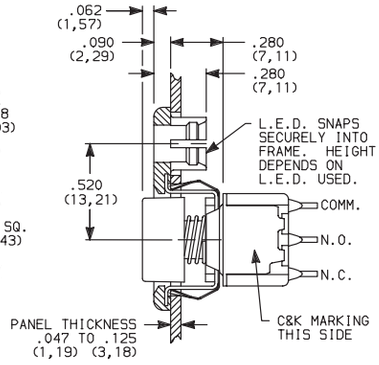

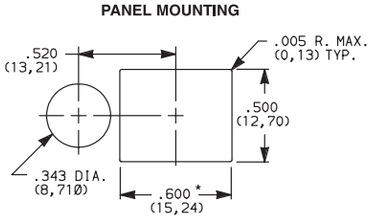

* Increase this dim. to .620/.625 (15,75/15,88) for .091/.125 (2,31/3,18) thk. panels.

LED not included.
For LED information, see page A-45.

J84 SNAP-IN WITH FRAME FOR LED, FLUSH CAP

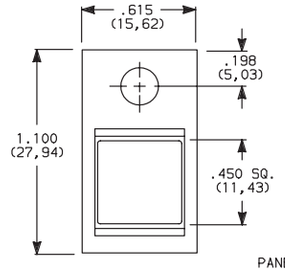

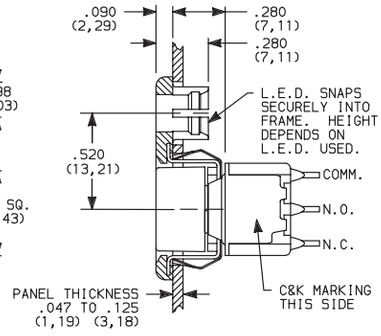

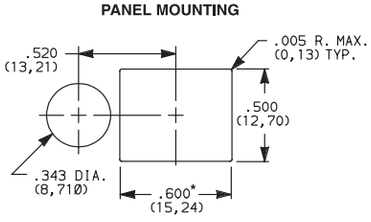

* Increase this dim. to .620/.625 (15,75/15,88) for .091/.125 (2,31/3,18) thk. panels.

LED not included.
For LED information, see page A-45.

OPTION CODE	CAP AND FRAME COLOR
2	BLACK
1	WHITE
3	RED
4	ORANGE
5	YELLOW
6	GREEN
7	BLUE
9	GRAY

Other colors available, consult Customer Service Center.
Cap and Frame Finish: matte.

Available with C, W-W4, Z or Z3 terminations and SPDT and DPDT models only.

NOTE: Caps and frames available separately, see pages A-44 and A-45.

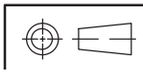
Third Angle Projection

Dimensions are shown: Inches (mm)
Specifications and dimensions subject to change

ACTUATOR—SNAP-IN FRONT MOUNT

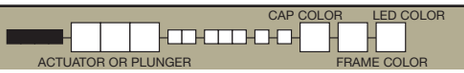

J85 SNAP-IN WITH FRAME AND LED

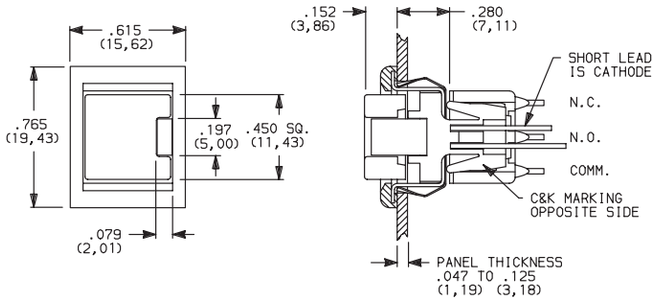

PANEL MOUNTING

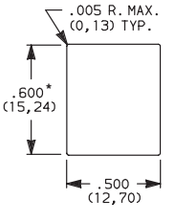

* Increase this dim. to .620/.625 (15,75/15,88) for .091/.125 (2,31/3,18) thk. panels.

8121J85ZGE223
SPST

Available with C, W-W4, Z or Z3 terminations and SPDT models only. For LED information see page A-45.

NOTE: Caps & frames available separately, see pages A-44 and A-45.

OPTION CODE	CAP AND FRAME COLOR
2	BLACK
1	WHITE
3	RED
4	ORANGE
5	YELLOW
6	GREEN
7	BLUE
9	GRAY

OPTION CODE	LED COLOR
3	RED
5	YELLOW
6	GREEN

For LED information see page A-45.

ACTUATOR—PC MOUNT

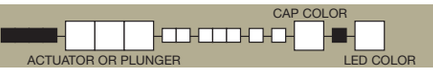

J95 PC WITH V-BRACKET AND LED

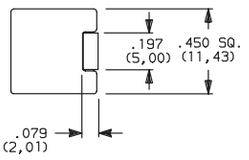

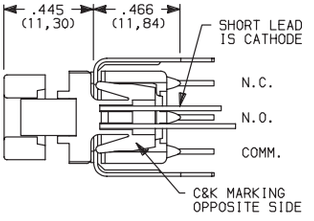

PC MOUNTING

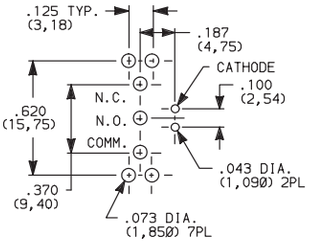

8121J95V3GE23
SPST

OPTION CODE	CAP AND FRAME COLOR
2	BLACK
1	WHITE
3	RED
4	ORANGE
5	YELLOW
6	GREEN
7	BLUE
9	GRAY

OPTION CODE	LED COLOR
3	RED
5	YELLOW
6	GREEN

For LED information see page A-45.

NOTE: Caps available separately, see page A-44.
Available with V3 terminations and SPDT models only.

Third Angle Projection

Dimensions are shown: Inches (mm)
Specifications and dimensions subject to change

8020 Series
Snap-acting Momentary Pushbutton Switches

PLUNGER

ACTUATOR OR PLUNGER

S PLUNGER

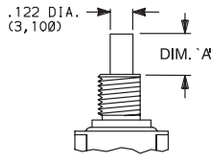

AVAILABLE BUSHINGS	DIM. 'A' FOR C, W-W4, Z & Z3 TERMINATIONS	DIM. 'A' FOR A, A2, A3, A4, A6, AV-A3, R & R2 TERMINATIONS	DIM. 'A' FOR V3-V61 TERMINATIONS
D, D9	.244 (6,20)	.228 (5,79)	.224 (5,69)
H, H9	.218 (5,54)	.202 (5,13)	.198 (5,03)
Y, Y9	.203 (5,16)	.187 (4,75)	.183 (4,65)
Y3	(5,54)	(5,13)	(5,03)
Y4	.185 (4,70)	.169 (4,29)	.165 (4,19)
D2, D8	N/A	.232 (5,89)	.228 (5,79)
D3	N/A	.162 (4,11)	.158 (4,01)

NONE NO PLUNGER CHOICE REQUIRED (JXX ACTUATORS)

L PLUNGER

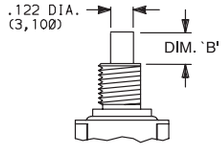

AVAILABLE BUSHINGS	DIM. 'B' FOR C, W-W4, Z & Z3 TERMINATIONS	DIM. 'B' FOR A, A2, A3, A4, A6, AV-A3, R & R2 TERMINATIONS	DIM. 'B' FOR V3-V61 TERMINATIONS
Y, Y9	.178 (4,52)	.162 (4,11)	.158 (4,01)
Y4	.090 (2,29)	.074 (1,88)	.070 (1,78)

M SNAP-FITTING PLUNGER

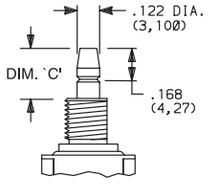

AVAILABLE BUSHINGS	DIM. 'C' FOR C, W-W4, Z & Z3 TERMINATIONS	DIM. 'C' FOR A, A2, A3, A4, A6, AV-A3, R & R2 TERMINATIONS	DIM. 'C' FOR V3-V61 TERMINATIONS
D, D9	.297 (7,54)	.281 (7,14)	.277 (7,04)
H, H9	.267 (6,78)	.251 (6,38)	.247 (6,27)
Y, Y9	.259 (6,58)	.243 (6,17)	.239 (6,07)
Y3	(6,78)	(6,37)	(6,27)
Y4	.259 (6,58)	.243 (6,17)	.239 (6,07)
D2, D8	N/A	.273 (6,93)	.269 (6,83)
D3	N/A	.361 (9,17)	.357 (9,07)

N/A = NOT AVAILABLE

NOTE: When selecting plunger option, bushing selection must also be made, see next page. No plunger option is required when any JXX actuator option is selected. Additional plunger lengths are available on SPDT and DPDT models, consult Customer Service Center. Not all plunger lengths sufficient for use with caps, see page A-44.

BUSHING

NONE NO BUSHING CHOICE REQUIRED (JXX ACTUATORS)

D .280" HIGH THREADED, KEYWAY

D9 .280" HIGH UNTHREADED, KEYWAY

H .250" HIGH THREADED, FLAT

H9 .250" HIGH UNTHREADED, FLAT

Y .350" HIGH THREADED, KEYWAY

Y9 .350" HIGH UNTHREADED, KEYWAY

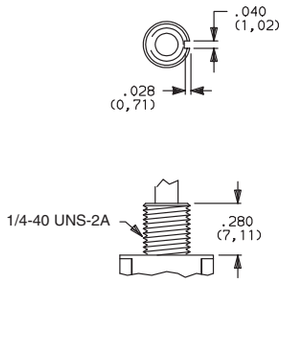

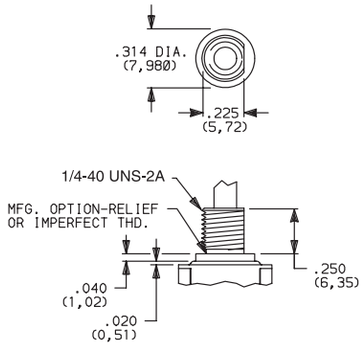

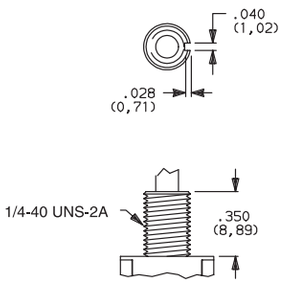

D9 bushing standard with A-A6, R, R2 AV-AV3 terminations.

H bushing standard with C, W-W4, Z or Z3 terminations. H, H9 bushings not available on single pole models with A3-A6, R, R2 terminations.

Will withstand 12 in./lbs. of torque with no distortion.

Third Angle Projection

Dimensions are shown: Inches (mm)
Specifications and dimensions subject to change

BUSHING

Y3 6.35mm THREADED, KEYWAY

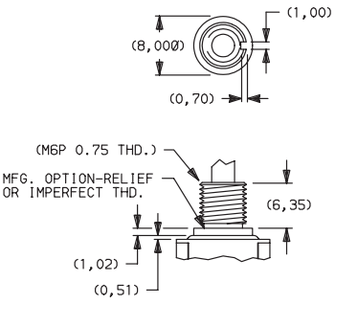

Y4 .378" HIGH THREADED, FLAT

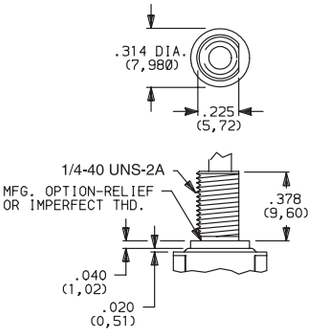

Y3 & Y4 bushings not available on single pole models with A3-A6, R, R2 terminations. Will withstand 12 in./lbs. of torque with no distortion.

D2 .288" HIGH THREADED, FLAT
D8 .288" HIGH UNTHREADED, FLAT

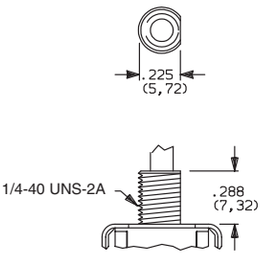

D2, D8 bushings not available with C, W-W4, Z, Z3 terminations.

D3 .180" HIGH UNTHREADED

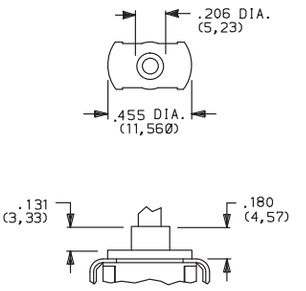

D3 bushing available with A, A2, A3, AV, AV2, AV3 and V2-V61 terminations only.

NOTE: No bushing option choice required when JXX actuator option is selected. When selecting bushing option, plunger selection must also be made, see previous page. Plunger lengths vary with bushing and termination options selected.

PANEL MOUNTING

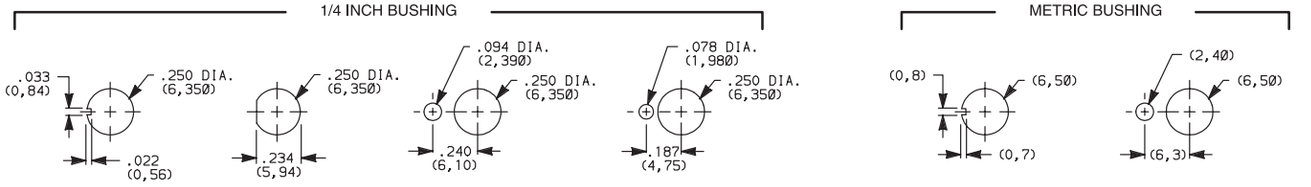

Without locking ring | With standard locking ring | With small locking ring | Without locking ring | With locking ring

NOTE: Two mounting nuts, locking ring and lockwasher supplied standard with threaded bushings.
Optional mounting nut and locking ring styles available, see section "Technical Data and Additional Hardware".

TERMINATIONS

Z SOLDER LUG

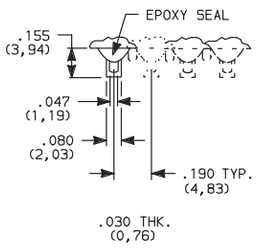

SPDT thru 4PDT

Not available with J95 actuator, P or R contact material.

C PC THRU-HOLE

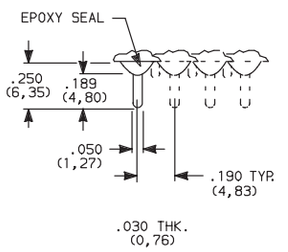

PC MOUNTING

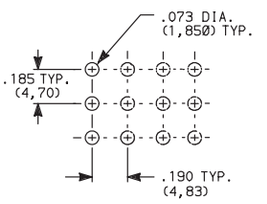

SPDT thru 4PDT

Not available with J95 actuator option.

Z3 QUICK CONNECT

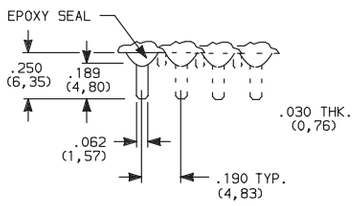

SPDT thru 4PDT

Not available with J95 actuator, P or R contact material. Mating quick connector available, order part number 530100000, page A-44.

W W1, W3, W4 WIRE WRAP

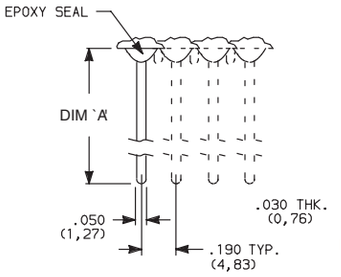

OPTION CODE	DIM 'A'
W	.750 (19,05)
W1	.964 (24,49)
W3	.425 (10,80)
W4	1.062 (26,97)

Not available with J95 actuator option.

SPDT thru 4PDT

Third Angle Projection

Dimensions are shown: Inches (mm)
Specifications and dimensions subject to change

8020 Series
Snap-acting Momentary Pushbutton Switches

TERMINATIONS

A RIGHT ANGLE, PC THRU-HOLE

8121SD9AGE
SPDT

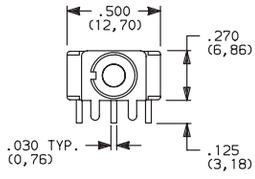

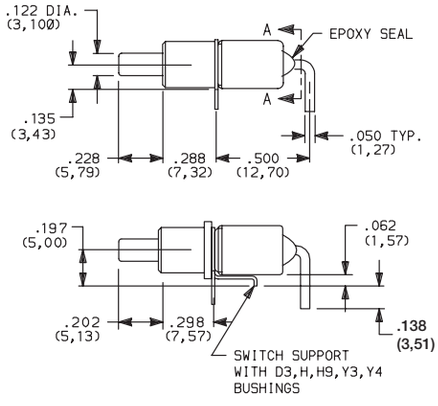

Part Number 8121SH9AGE

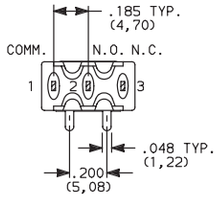

SECTION A-A

Terminal Nos.
For Reference Only.

A3 RIGHT ANGLE, SNAP-IN, PC THRU-HOLE

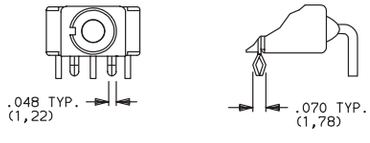

PC MOUNTING

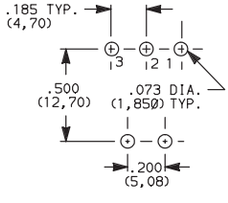

Not available with JXX actuators and I seal.
Terminal bend radii and lead-in manufacturing option.

A RIGHT ANGLE, PC THRU-HOLE

8221SD9AGE
DPDT

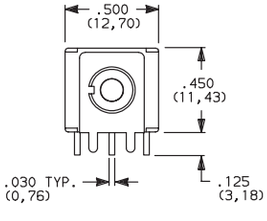

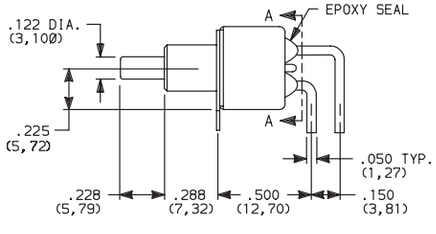

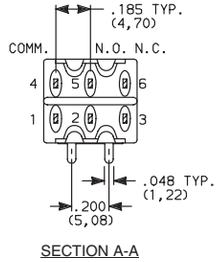

SECTION A-A

A3 RIGHT ANGLE, SNAP-IN, PC THRU-HOLE

PC MOUNTING

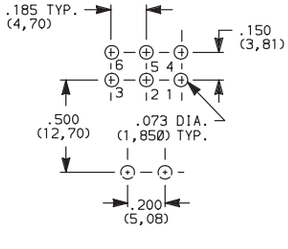

Not available with JXX actuators and I seal option.
Terminal bend radii and lead-in manufacturing option.

Third Angle Projection

Dimensions are shown: Inches (mm)
Specifications and dimensions subject to change

TERMINATIONS

A RIGHT ANGLE, PC THRU-HOLE

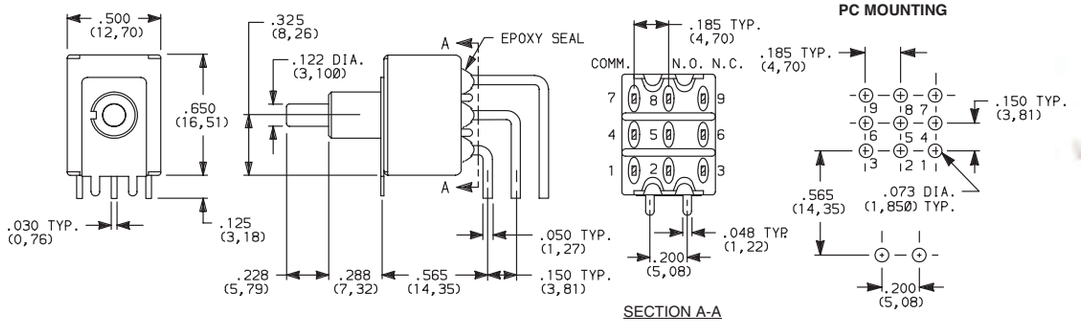

8321SD9AGE
3PDT

Not available with JXX actuators and I seal option.
Terminal bend radii and lead-in manufacturing option.

A2 RIGHT ANGLE, PC THRU-HOLE

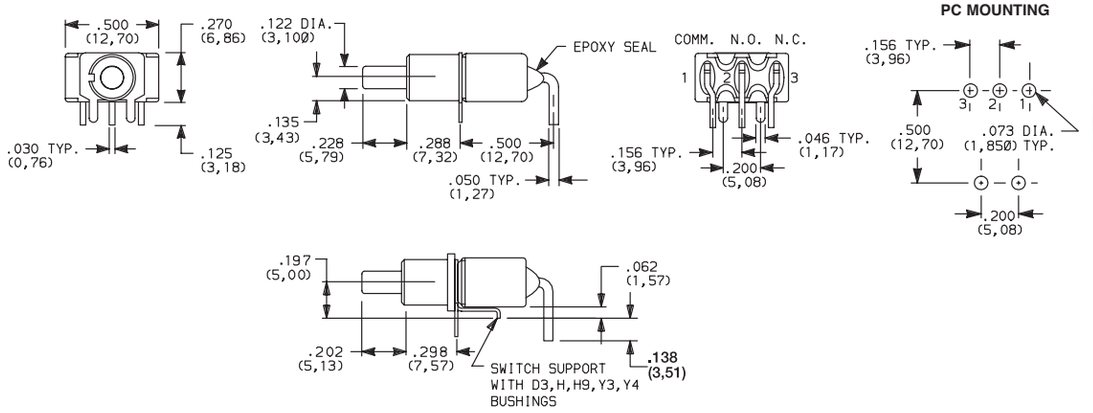

Part Number 8121SH9A2GE

8121SD9A2GE
SPDT

Not available with JXX actuators, I seal option.
Terminal bend radii and lead-in manufacturing option.

A4 RIGHT ANGLE, PC THRU-HOLE, REVERSED TERMINALS

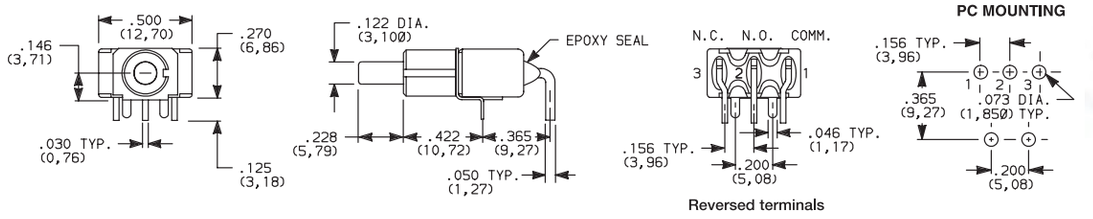

8121SD9A4GE
SPDT

Not available with JXX actuators, D3, H, H9, Y3, Y4 bushings and I seal.
Terminal bend radii and lead-in manufacturing option.

The A4 and R2 termination options are functionally identical and fit the same PC mounting pattern. The switches, however, are shifted relative to the mounting holes. The PC pattern must clear the switch support legs. Unlike the R2, the A4 option is available with UL/CSA.

Third Angle Projection

Dimensions are shown: Inches (mm)
Specifications and dimensions subject to change

8020 Series
Snap-acting Momentary Pushbutton Switches

TERMINATIONS

A6 RIGHT ANGLE, PC THRU-HOLE

8121SD9A6GE
SPDT

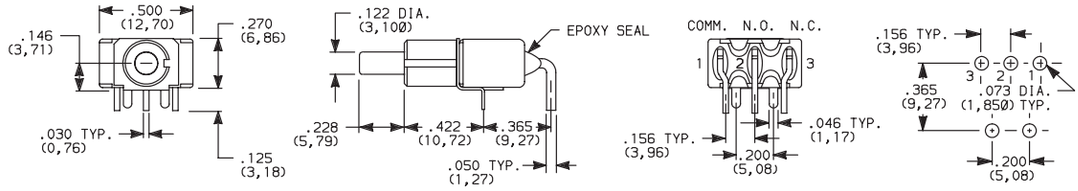

The A6 and R termination options are functionally identical and fit the same PC mounting pattern, The switches, however, are shifted relative to the mounting holes. The PC pattern must clear the switch support legs. Unlike the R, the A6 option is available with UL/CSA.

Not available with JXX actuators, D3, H, H9, Y3, Y4 bushings and I seal.
Terminal bend radii and lead-in manufacturing option.

R RIGHT ANGLE WITH PCB

8121SD9RGE
SPDT

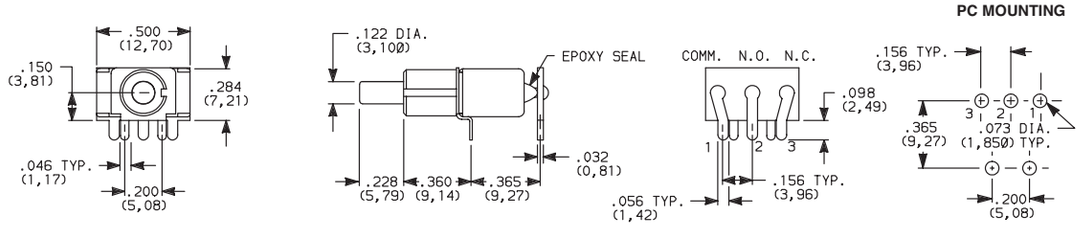

Not available with JXX actuators, D3, H, H9, Y3, Y4 bushings, I seal option.
R termination not UL/CSA approved.

R2 RIGHT ANGLE WITH PCB, REVERSED TERMINALS

8121SD9R2GE
SPDT

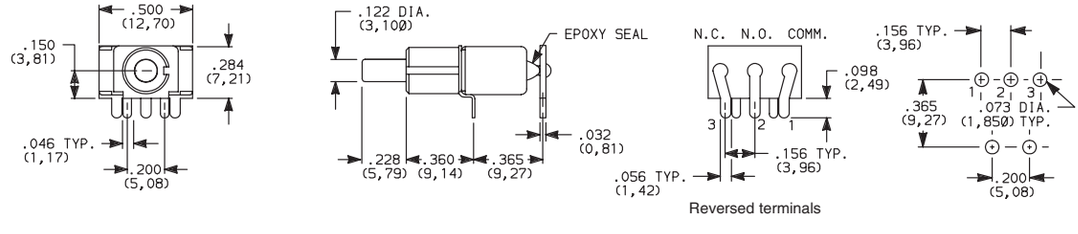

Not available with JXX actuators, D3, H, H9, Y3, Y4 bushings, I seal option.
R2 termination not UL/CSA approved.

Third Angle Projection

Dimensions are shown: Inches (mm)
Specifications and dimensions subject to change

TERMINATIONS

AV2 VERTICAL RIGHT ANGLE, PC THRU-HOLE, .150" PITCH

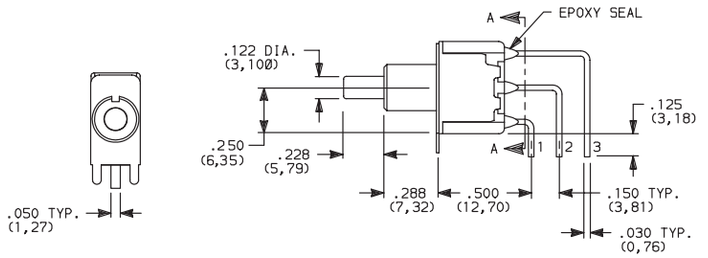

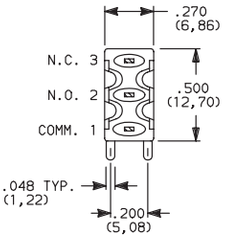

SECTION A-A

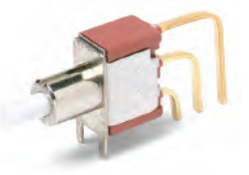

8121SD9AV2GE
SPDT

AV3 VERTICAL RIGHT ANGLE, SNAP-IN,, PC THRU-HOLE, .150" PITCH

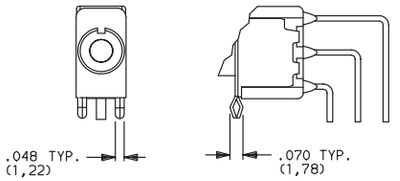

AV1 VERTICAL RIGHT ANGLE, EXTENDED, PC THRU-HOLE, .150" PITCH

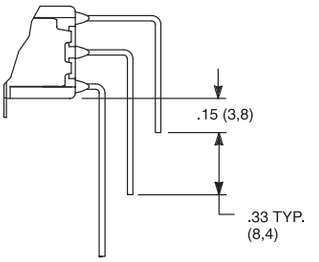

PC MOUNTING

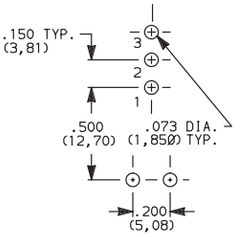

Not available with JXX actuators and I seal.
Terminal bend radii and lead-in manufacturing option.

AV2 VERTICAL RIGHT ANGLE, PC THRU-HOLE, .150" PITCH

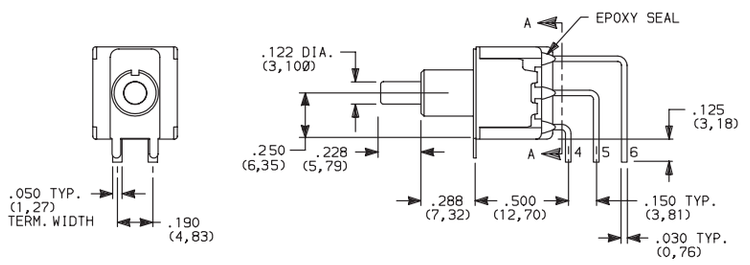

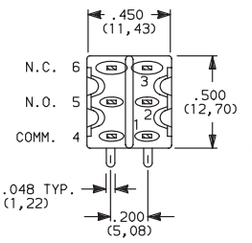

SECTION A-A

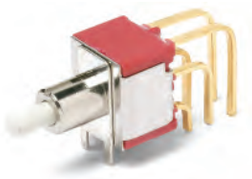

8221SD9AV2GE
DPDT

AV3 VERTICAL RIGHT ANGLE, SNAP-IN, PC THRU-HOLE, .150" PITCH

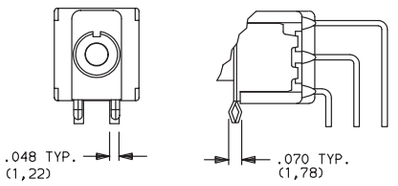

AV1 VERTICAL RIGHT ANGLE, EXTENDED, PC THRU-HOLE, .150" PITCH

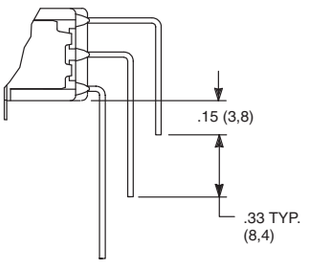

PC MOUNTING

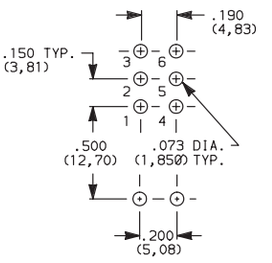

Not available with JXX actuators and I seal.
Terminal bend radii and lead-in manufacturing option.

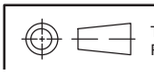

Third Angle Projection

Dimensions are shown: Inches (mm)
Specifications and dimensions subject to change

8020 Series
Snap-acting Momentary Pushbutton Switches

TERMINATIONS

AV2 VERTICAL RIGHT ANGLE, PC THRU-HOLE, 150" PITCH

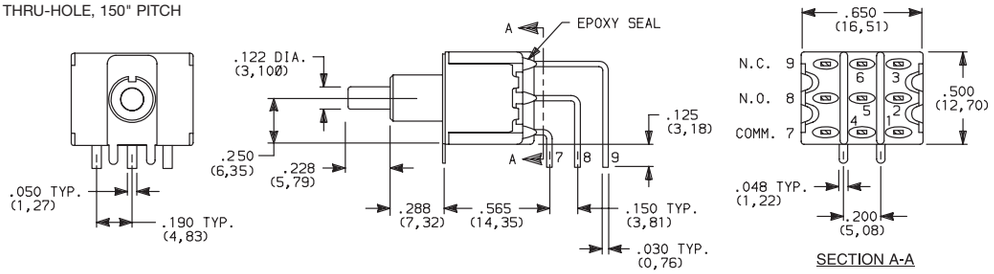

8321SD9AV2GE
3PDT

AV1 VERTICAL RIGHT ANGLE, EXTENDED, PC THRU-HOLE, .150" PITCH

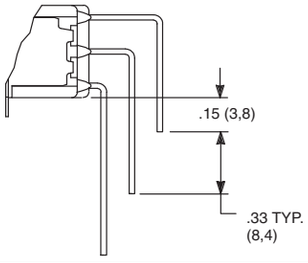

AV3 VERTICAL RIGHT ANGLE, SNAP-IN, PC THRU-HOLE, .150" PITCH

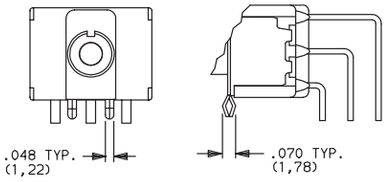

Not available with JXX actuators and I seal.
Terminal bend radii and lead-in manufacturing option.

PC MOUNTING

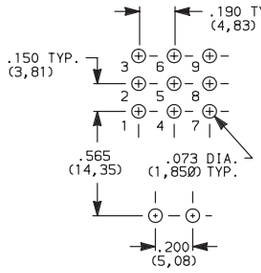

AV2 VERTICAL RIGHT ANGLE, PC THRU-HOLE, 150" PITCH

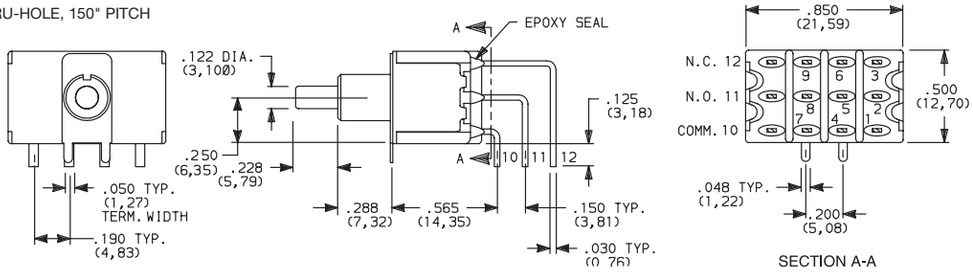

8421SD9AV2GE
4PDT

AV1 VERTICAL RIGHT ANGLE, EXTENDED, PC THRU-HOLE, .150" PITCH

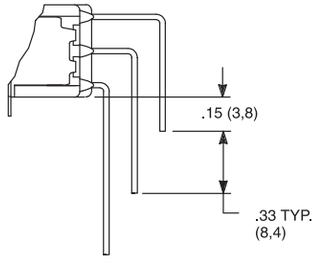

AV3 VERTICAL RIGHT ANGLE, SNAP-IN, PC THRU-HOLE, .150" PITCH

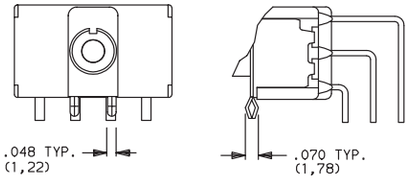

Not available with JXX actuators and I seal.
Terminal bend radii and lead-in manufacturing option.

PC MOUNTING

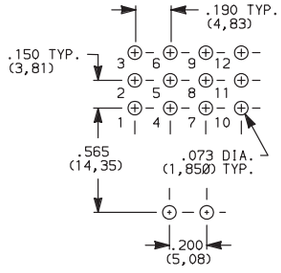

V2, V6, V7, V8 VERTICAL MOUNT, V-BRACKET

V61 VERTICAL MOUNT, V-BRACKET, SNAP-IN

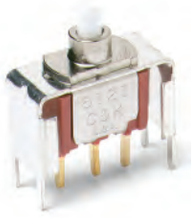

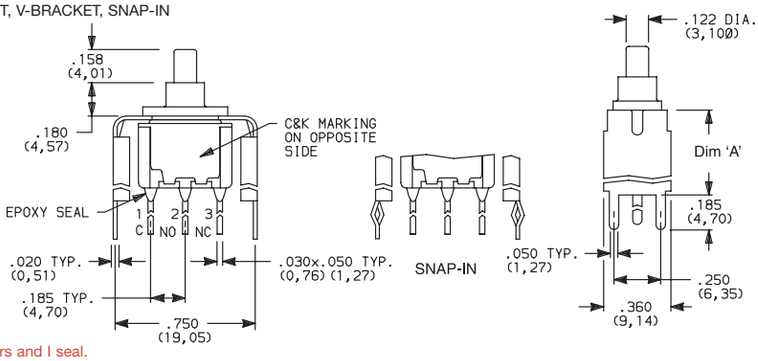

8121SD3__GE
SPDT

Not available with JXX actuators and I seal.

PC MOUNTING

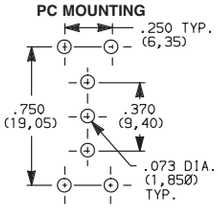

OPTION CODE	DIM 'A'
V2	.555 (14,10)
V6, V61	.460 (11,68)
V7	.630 (16,00)
V8	.953 (24,21)

Third Angle Projection

Dimensions are shown: Inches (mm)
Specifications and dimensions subject to change

TERMINATIONS

V2, V6, V7, V8 VERTICAL MOUNT, V-BRACKET
V61 VERTICAL MOUNT, V-BRACKET, SNAP-IN

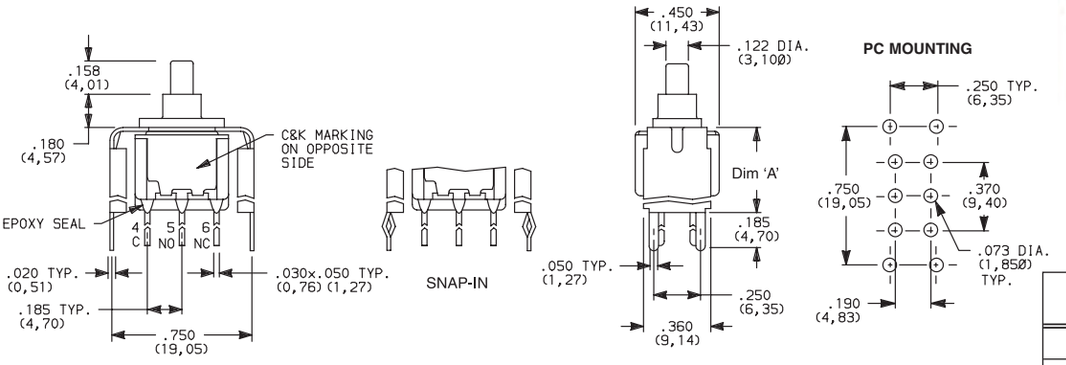

8221SD3__GE
DPDT

OPTION CODE	DIM 'A'
V2	.555 (14,10)
V6, V61	.460 (11,68)
V7	.630 (16,00)
V8	.953 (24,21)

Not available with JXX actuators and I seal.

V2, V7, V8 VERTICAL MOUNT, V-BRACKET

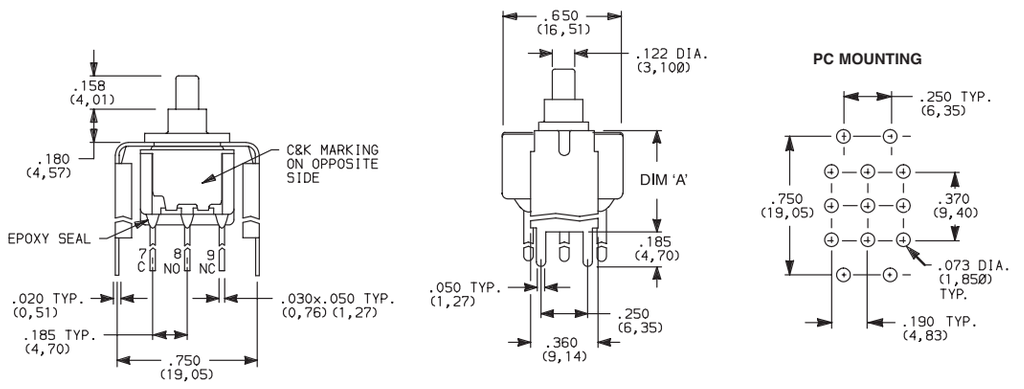

8321SD3__GE
3PDT

OPTION CODE	DIM 'A'
V2	.555 (14,10)
V7	.630 (16,00)
V8	.953 (24,21)

Not available with JXX actuators and I seal.

V2, V7, V8 VERTICAL MOUNT, V-BRACKET

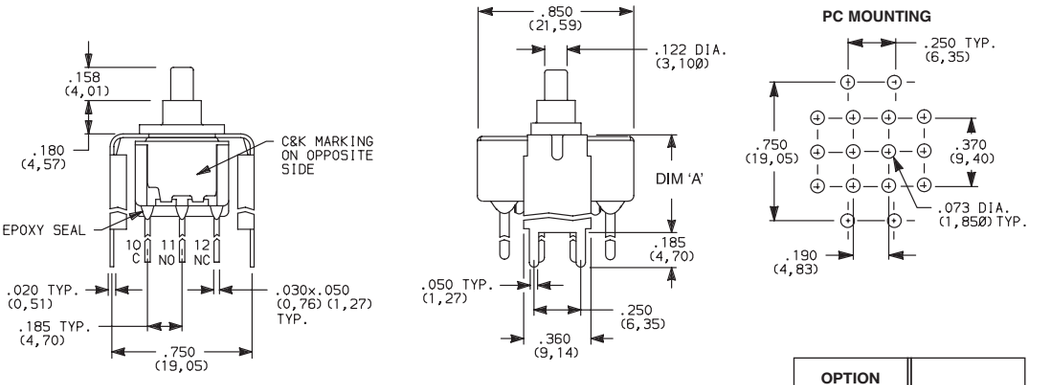

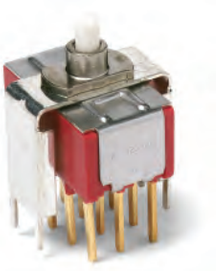

8421SD3__GE
4PDT

OPTION CODE	DIM 'A'
V2	.555 (14,10)
V7	.630 (16,00)
V8	.953 (24,21)

Not available with JXX actuators and I seal.

Third Angle Projection

Dimensions are shown: Inches (mm)
Specifications and dimensions subject to change

8020 Series
Snap-acting Momentary Pushbutton Switches

TERMINATIONS

V3, V4, V9 VERTICAL MOUNT, V-BRACKET

V31 VERTICAL MOUNT, V-BRACKET, SNAP-IN

8121SD3__GE
SPDT

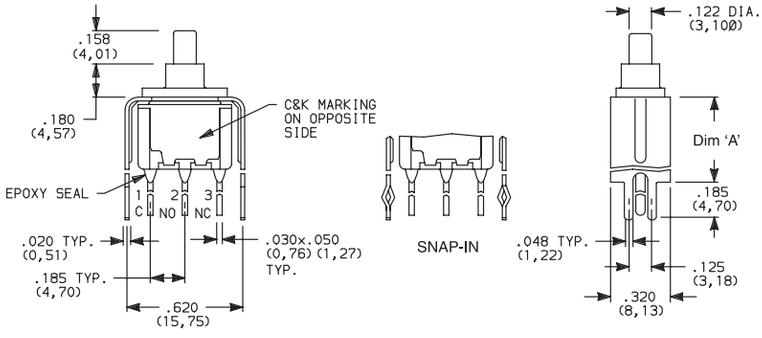

PC MOUNTING

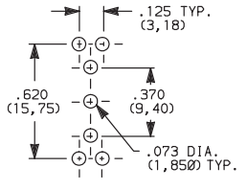

OPTION CODE	DIM 'A'
V3, V31	.460 (11,68)
V4	.630 (16,00)
V9	1.150 (29,21)

Not available with J8X actuators and I seal.

V3, V4, V9 VERTICAL MOUNT, V-BRACKET

V31 VERTICAL MOUNT, V-BRACKET, SNAP-IN

8221SD3__GE
DPDT

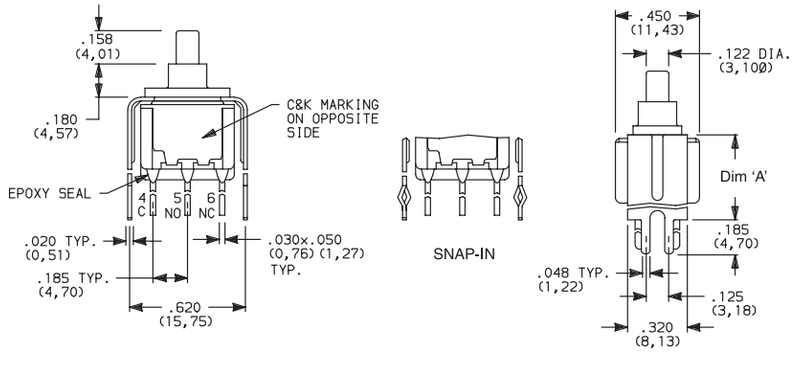

PC MOUNTING

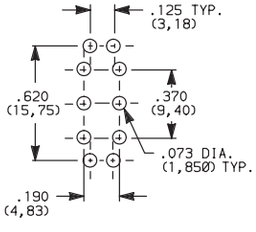

OPTION CODE	DIM 'A'
V3, V31	.460 (11,68)
V4	.630 (16,00)
V9	1.150 (29,21)

Not available with J8X actuators and I seal.

V4, V9 VERTICAL MOUNT, V-BRACKET

8321SD3V4GE
3PDT

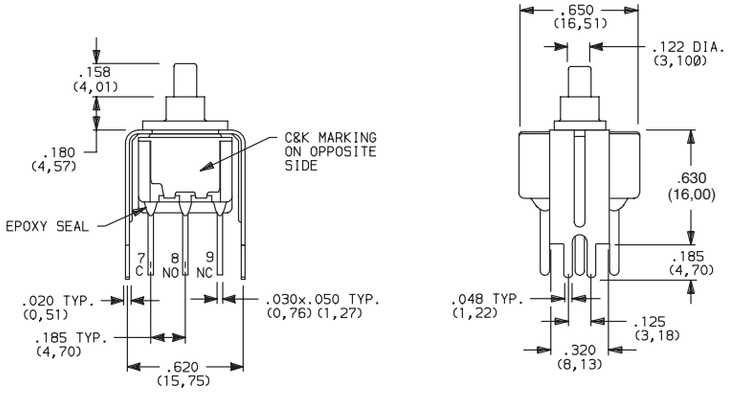

PC MOUNTING

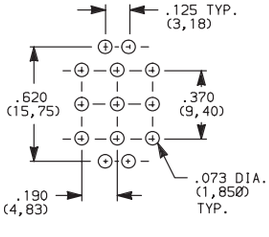

OPTION CODE	DIM 'A'
V4	.630 (16,00)
V9	1.150 (29,21)

Not available with JXX actuators and I seal.

Third Angle Projection

Dimensions are shown: Inches (mm)
Specifications and dimensions subject to change

TERMINATIONS

V4, V9 VERTICAL MOUNT, V-BRACKET

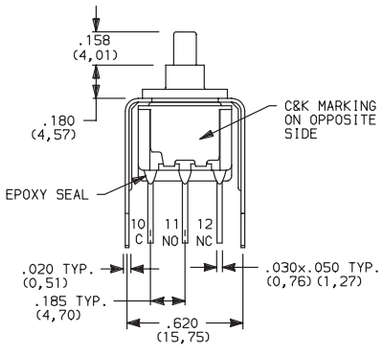

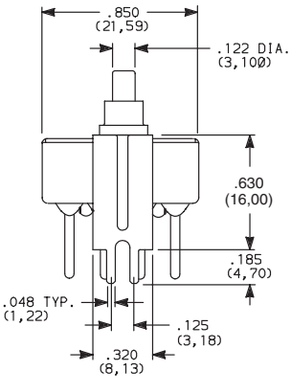

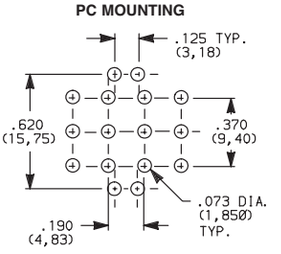

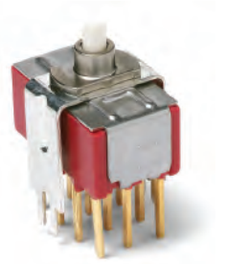

8421SD3V4GE
4PDT

OPTION CODE	DIM 'A'
V4	.630 (16,00)
V9	1.150 (29,21)

Not available with JXX actuators and I seal.

CONTACT MATERIAL

OPTION CODE	CONTACT MATERIAL	TERMINAL PLATING	RATINGS	
B	GOLD [1]	GOLD [1]	LOW LEVEL/DRY CIRCUIT	8x25 MODELS ONLY: 0.4 MAX. @ 20 V AC OR DC MAX.
P		MATTE-TIN [4]		
G	GOLD OVER SILVER [2,3]	GOLD [3]	LOW LEVEL/DRY CIRCUIT OR POWER	8X21, U8X1 MODELS ONLY: 0.4 VA MAX @ 20 V AC OR DC MAX. OR 1 AMP @ 120 V AC OR 28 V DC.
R		MATTE-TIN [4]		

* Note: See Technical Data section of this catalog for RoHS compliant and compatible definitions and specifications.

[1] ALL CONTACTS & TERMINALS: Copper alloy, with gold plate over nickel plate.
[2] N.O. AND N.C. CONTACTS: Coin silver, with gold plate over nickel plate.
[3] COMMON CONTACTS & ALL TERMINALS: Copper alloy, with gold plate over nickel plate.
[4] TERMINALS: Copper alloy, with matte-tin over nickel plate.

NOTE: Any models supplied with B, P, R or G contact material are RoHS compliant.

U811-U841 models with all options (except R, R2 terminations) when ordered with mandatory G or R contact material.

B or P contact material must be ordered with 8X25 models.

G or R contact material must be ordered with 8X21, U8X1 models.

P or R contact material not available with Z, Z3 terminations.

SEAL

E EPOXY SEAL

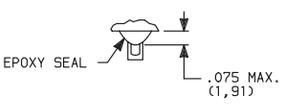

I EPOXY POTTED BASE

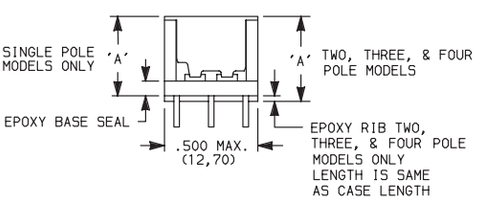

NO. POLES	DIM 'A'
SP	.410 (10,41)
DP	.440 (11,18)
3P	.505 (12,83)
4P	.505 (12,83)

NOTE: Available with C, W-W4, Z, Z3 terminations only.

Third Angle Projection

Dimensions are shown: Inches (mm)
Specifications and dimensions subject to change

8020 Series
Snap-acting Momentary Pushbutton Switches

AVAILABLE HARDWARE

Cap

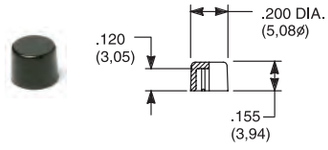

PART NO.

708901000	WHITE
708902000	BLACK
708903000	RED
708904000	ORANGE
708905000	YELLOW
708906000	GREEN
708907000	BLUE
708909000	GRAY

Material: Nylon
Finish: Gloss

Cap

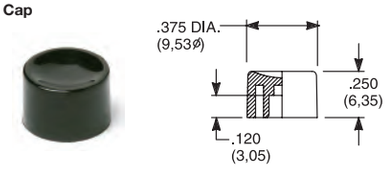

PART NO.

752701000	WHITE
752702000	BLACK
752703000	RED
752704000	ORANGE
752705000	YELLOW
752706000	GREEN
752707000	BLUE
752709000	GRAY

Material: Nylon
Finish: Gloss

Cap

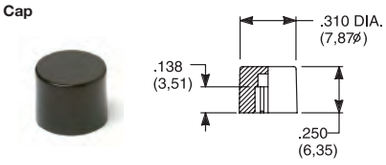

PART NO.

801801000	WHITE
801802000	BLACK
801803000	RED
801804000	ORANGE
801805000	YELLOW
801806000	GREEN
801807000	BLUE
801809000	GRAY

Material: Nylon
Finish: Gloss

Cap, Snap-fitting plunger

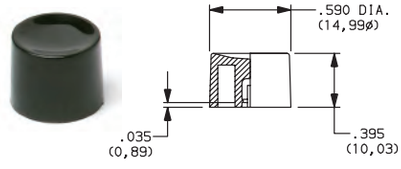

PART NO.

452D01000	WHITE
452D02000	BLACK
452D03000	RED
452D04000	ORANGE
452D05000	YELLOW
452D06000	GREEN
452D07000	BLUE
452D09000	GRAY

Material: Nylon
Finish: Gloss

Cap, Snap-fitting plunger

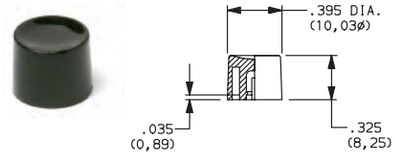

PART NO.

894101000	WHITE
894102000	BLACK
894103000	RED
894104000	ORANGE
894105000	YELLOW
894106000	GREEN
894107000	BLUE
894109000	GRAY

Material: Nylon
Finish: Gloss

Cap, J80, J81, J82, J83 & J84 options only

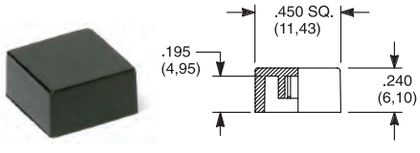

PART NO.

484601000	WHITE
484602000	BLACK
484603000	RED
484604000	ORANGE
484605000	YELLOW
484606000	GREEN
484607000	BLUE
484609000	GRAY

Material: Nylon
Finish: Gloss

PART NO.

798201000	WHITE
798202263	BLACK
798203000	RED
798204000	ORANGE
798205000	YELLOW
798206000	GREEN
798207000	BLUE
798209000	GRAY

Material: Nylon
Finish: Matte

Frame

PART NO.

615602263 BLACK

Material: Nylon
Finish: Matte

Frame

PART NO.

613302263 BLACK

Material: Nylon
Finish: Matte

Cap, J85 & J95 options only

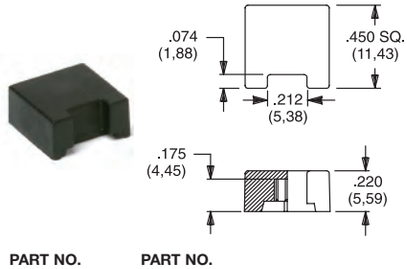

PART NO.

459701000	WHITE
459702000	BLACK
459703000	RED
459704000	ORANGE
459705000	YELLOW
459706000	GREEN
459707000	BLUE
459709000	GRAY

Material: Nylon
Finish: Gloss

PART NO.

476801000	WHITE
476802000	BLACK
476803000	RED
476804000	ORANGE
476805000	YELLOW
476806000	GREEN
476807000	BLUE
476809000	GRAY

Material: Nylon
Finish: Matte

Fits Z3 Termination female connector

PART NO.

530100000

Available in loose pieces.

NOTE: Additional nuts, locking rings and lockwashers available separately, see section "Technical Data and Additional Hardware".
Other cap & frame colors available, consult Customer Service Center.

Third Angle Projection

Dimensions are shown: Inches (mm)
Specifications and dimensions subject to change

AVAILABLE HARDWARE

Frames snap into panel opening and are independent from switch mounting. Accurate positioning of the PC mounted switch relative to the panel opening is necessary to provide proper clearance between actuator and frame. Available in two basic styles and four panel thicknesses .047-.125 in. Material: Nylon. Finish: Matte.

TYPICAL APPLICATION

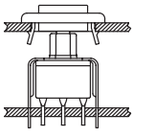

.047" (1,19) PANEL THK.	.062" (1,57) PANEL THK.	.090" (2,29) PANEL THK.	.125" (3,18) PANEL THK.
PART NO.	**PART NO.**	**PART NO.**	**PART NO.**
432502263	432602263	432702263	432802263 BLACK

PANEL MOUNTING

For part numbers
4325xxxxx, 4326xxxxx

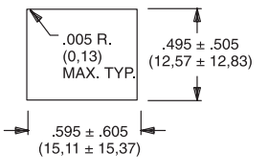

For part numbers
4327xxxxx, 4328xxxxx

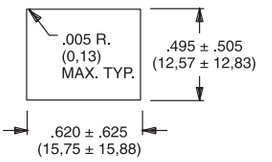

Panel Inserts

Above frames (part nos. 432XXXXXX) are also available with insert which accepts LED for indicator light assembly. Order insert separately from frame. Blank insert panel (without hole for LED) also available. **LED not included.**

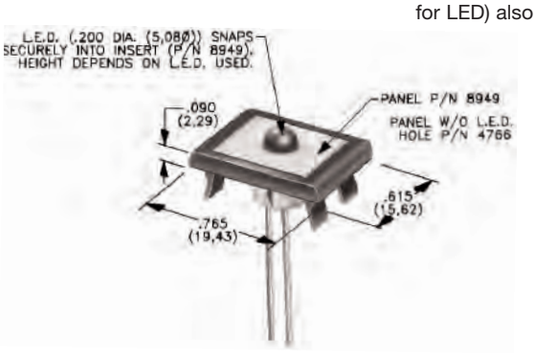

PANEL INSERT WITH HOLE FOR LED	BLANK PANEL INSERT WITHOUT HOLE FOR LED
PART NO.	**PART NO.**
894902000	476602000 BLACK

Special colors, custom markings available, consult Customer Service Center.

LED INFORMATION

SWITCHES WITH LED SUPPLIED: J85, J95 OPTIONS:
Rectangular LEDs are supplied on 8020 Series pushbutton switches with J85 and J95 options. These LEDs are factory installed and are not replaceable. The following specifications apply:

OPTION CODE	COLOR	TYP. INTENSITY	TYP. FORWARD VOLTAGE	TYP. FORWARD CURRENT	MAX RATINGS AT 25ºC AMBIENT TEMPERATURE		
					FORWARD VOLTAGE	CONTINUOUS FORWARD CURRENT	POWER DISSIPATION
6	Green	1.0 mcd	2.1 V	20 mA	2.5 V	50 mA	125 mW
3	Red*	0.5 mcd		10 mA		30 mA	75 mW
5	Yellow	4.0 mcd		20 mA		50 mA	125 mW

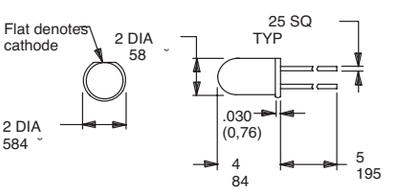

Suggested LED for J82 & J84 options
Dimensions for reference only

Process Information: Soldering to LED leads must be completed within 5 seconds at 500ºF (260ºC) maximum.
Caution: Circuit elements must limit forward current of LED to 50mA max. continuous.
* Extra-bright red LED available (typ. intensity 4.5 mcd), consult Customer Service Center.
LEDs are not supplied with J82, J84 options. LED snaps into switch frame surrounding actuator and is wired externally.

Third Angle Projection

Dimensions are shown: Inches (mm)
Specifications and dimensions subject to change

E010 Series
Sealed Momentary Pushbutton Switches

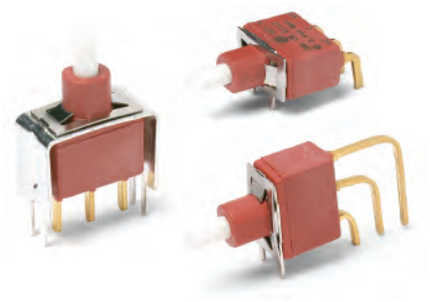

Features/Benefits

- *Process sealed, withstands soldering and cleaning*
- *Long life contact design*
- *Snap-fitting plunger available, accepts a variety of caps*
- *RoHS compliant models available*

Typical Applications

- *Instrumentation*
- *Telecommunications and networking equipment*
- *Computers and peripherals*

Models Available

Specifications

CONTACT RATING: Q contact material: 4 AMPS @ 125 V AC or 28 V DC. See page A-50 for additional ratings.

ELECTRICAL LIFE: 40,000 make-and-break cycles at full load.

CONTACT RESISTANCE: Below 20 mΩ typ. initial @ 2–4 V DC, 100 mA, for both silver and gold plated contacts.

INSULATION RESISTANCE: 10^9Ω min.

DIELECTRIC STRENGTH: 1000 Vrms min. @ sea level.

OPERATING TEMPERATURE: -30°C to 75°C.

CAP INSTALLATION FORCE: 10 lbs. max. permissible.

SOLDERABILITY: Per MIL-STD-202F method 208D, or EIA RS-186E method 9 (1 hour steam aging).

NOTE: Any models supplied with P, Q, B or G contact material are RoHS compliant.

NOTE: Specifications and materials listed above are for switches with standard options. For information on specific and custom switches, consult Customer Service Center.

Materials

CASE & BUSHING: Glass filled nylon 6/6, flame retardant (UL 94V-0).

PLUNGER: Glass filled nylon or glass filled polyester (PBT) (UL 94V-0), with internal o-ring seal standard.

SWITCH SUPPORT: Brass or steel, matte-tin plated.

SWITCH SUPPORT RETAINER: Stainless steel.

END CONTACTS: Q contact material: Coin silver, silver plated. See A-50 for additional ratings.

CENTER CONTACTS & ALL TERMINALS: Q contact material: Copper alloy, silver plated. See page A-50 for additional ratings.

TERMINAL SEAL: Epoxy.

HARDWARE: Nut & locking ring-Brass, nickel plated. Lockwasher-Steel, nickel plated.

Build-A-Switch

To order, simply select desired option from each category and place in the appropriate box. Available options are shown and described on pages A-47 thru A-51. For additional options not shown in catalog, consult Customer Service Center. All models are process sealed to withstand machine soldering temperatures and pressure wash cleaning methods.

Switch Function
E112 SPDT On-Mom.

Plunger
S .222" high
L .338" high
M .331" high, snap-fitting

Bushing
D1 Unthreaded
Y Threaded, keyway

Terminations
A Right angle, PC thru-hole
AV2 Vertical right angle, PC thru-hole
C PC Thru-hole
A3 Right angle, snap-in, PC thru-hole
AV3 Vertical right angle, snap-in, PC thru-hole
R2 Right angle with PCB
V3 .460" high, V-bracket
V4 .630" high, V-bracket
V6 .460" high, V-bracket
V8 .953" high, V-bracket
V31 .460" high, snap-in V-bracket
V81 .953" high, snap-in V-bracket
V91 1.150" high, snap-in V-bracket
W .750" long, wire wrap
Z Solder lug

Contact Material
B Gold
P Gold, matte-tin
Q Silver
G Gold over silver

Seal
E Epoxy

Dimensions are shown: Inches (mm)
Specifications and dimensions subject to change

E010 Series
Sealed Momentary Pushbutton Switches

SWITCH FUNCTION

NO. POLES	MODEL NO.	SWITCH FUNCTION POS. 1 (C&K marking this side)	SWITCH FUNCTION POS. 2 (C&K marking this side)	CONNECTED TERMINALS POS. 1 (C&K marking this side)	CONNECTED TERMINALS POS. 2 (C&K marking this side)	SCHEMATIC
SP	E112	ON	MOM.	2-1	2-3	SPDT: NC 1, 2 (COMM), 3 NO

SPDT

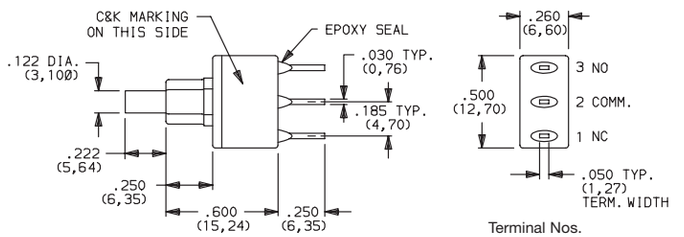

Part number shown: E112SD1CQE

MOM. = Momentary

All models c UL us with all options when ordered with G or Q contact material.

PLUNGER

S .218" HIGH

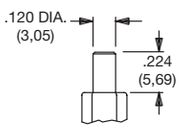

Standard with D1 bushing (as shown).

† Subtract .100 (2,54) from plunger length when ordered with Y bushing.

L .338" HIGH

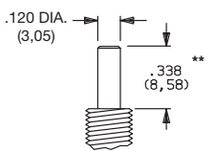

Standard with Y bushing (as shown).

** Add .100 (2,54) from plunger length when ordered with D1 bushing.

M .331" HIGH, SNAP-FITTING

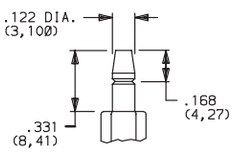

NOTE: Caps available for all plunger options, see pages A-50 and A-51.

BUSHING

D1 UNTHREADED

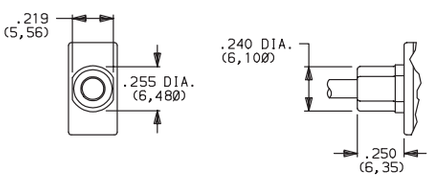

S plunger standard with D1 bushing.

Y THREADED, KEYWAY

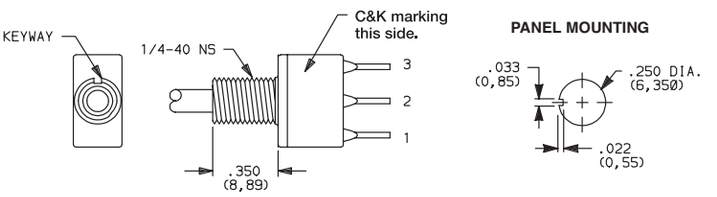

L plunger standard with Y bushing. Available only with C, Z terminations.
Hardware: One dress nut part number 299D01201, one hex nut and lockwasher supplied standard.

Withstands 4 in./lbs. without distortion.

NOTE: Internal o-ring actuator seal standard for all bushing options.

Third Angle Projection

Dimensions are shown: Inches (mm)
Specifications and dimensions subject to change

E010 Series
Sealed Momentary Pushbutton Switches

TERMINATIONS

C PC THRU-HOLE

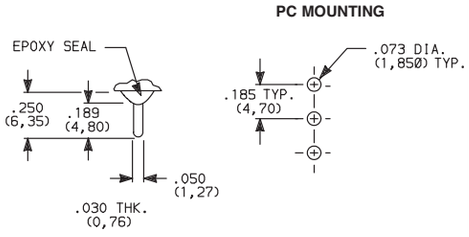

SPDT

Z SOLDER LUG

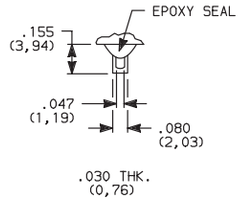

SPDT Not available with P contact materials.

W WIRE WRAP

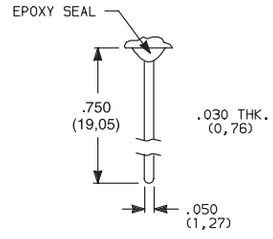

SPDT

A RIGHT ANGLE, PC THRU-HOLE

E112SD1ABE
SPDT

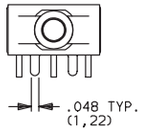

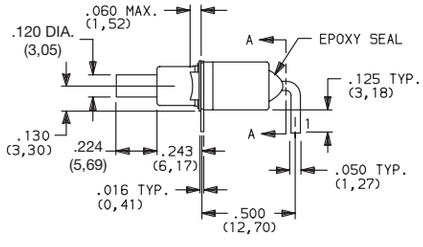

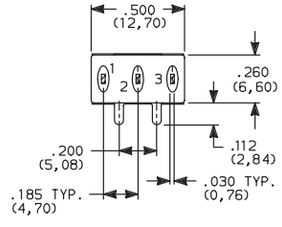

SECTION A-A

A3 RIGHT ANGLE, SNAP-IN, PC THRU-HOLE

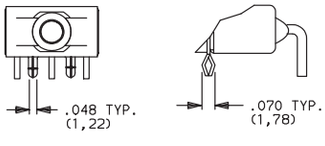

AW RIGHT ANGLE, EXTENDED, PC THRU-HOLE

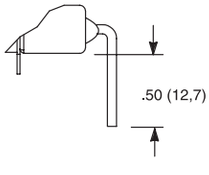

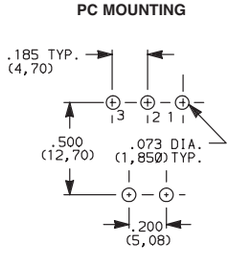

NOTE: Terminal bend radii and lead-in manufacturing option.
Available with D1 bushing only.

AV2 VERTICAL RIGHT ANGLE, PC THRU-HOLE, .150" PITCH

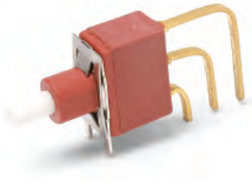

E112SD1AV2BE
SPDT

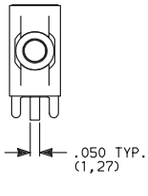

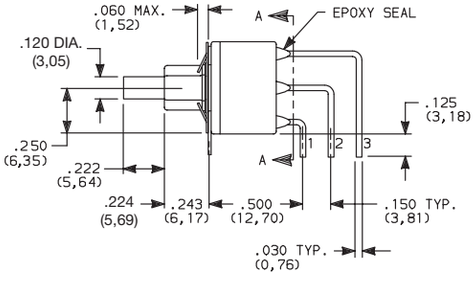

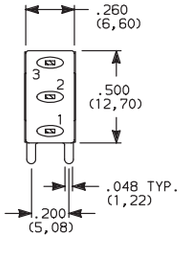

SECTION A-A

AV3 VERTICAL RIGHT ANGLE, SNAP-IN, PC THRU-HOLE, .150" PITCH

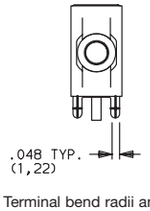

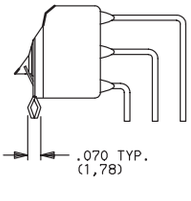

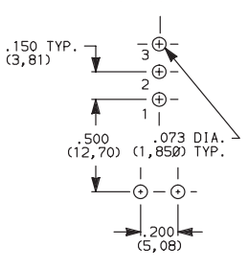

NOTE: Terminal bend radii and lead-in manufacturing option.
Available with D1 bushing only.

Third Angle Projection

Dimensions are shown: Inches (mm)
Specifications and dimensions subject to change

TERMINATIONS

R2 RIGHT ANGLE WITH PCB

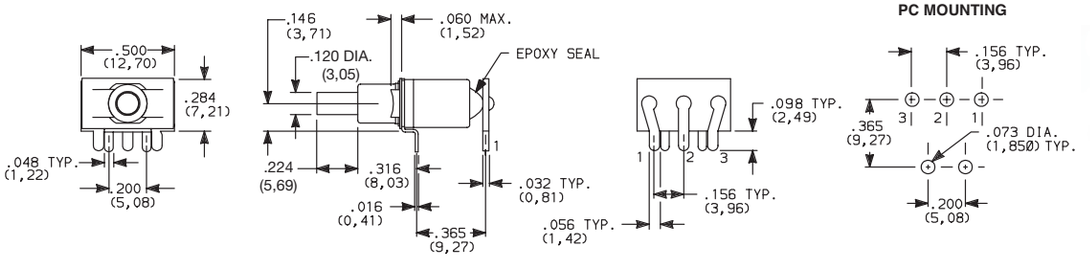

E112SD1R2BE
SPDT

NOTE: Available with D1 bushing and B contact material only.

V3, V4 VERTICAL MOUNT, V-BRACKET
V31, V91 VERTICAL MOUNT, V-BRACKET, SNAP-IN

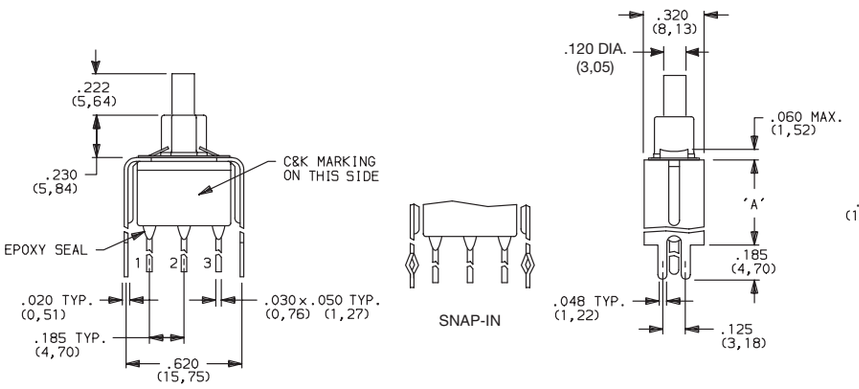

E112SD1__BE
SPDT

OPTION CODE	DIM 'A'
V3, V31	.460 (11,68)
V4	.630 (16,00)
V91	1.150 (29,21)

NOTE: Available with D1 bushing only.

V6, V8 VERTICAL MOUNT, V-BRACKET
V81 VERTICAL MOUNT, V-BRACKET, SNAP-IN

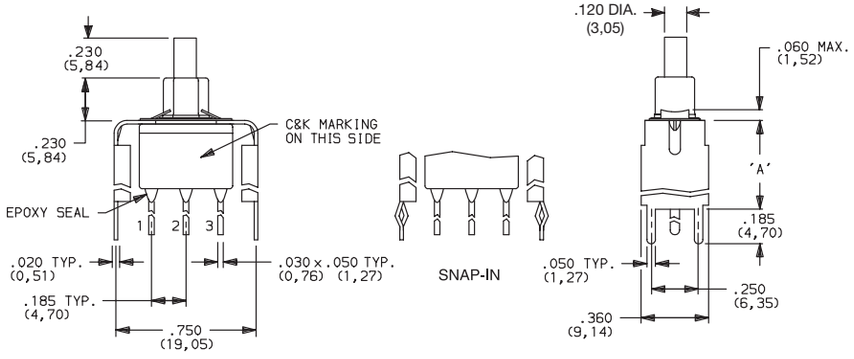

E112SD1__BE
SPDT

OPTION CODE	DIM 'A'
V6	.460 (11,68)
V8, V81	.953 (24,21)

NOTE: Available with D1 bushing only.

Third Angle Projection

Dimensions are shown: Inches (mm)
Specifications and dimensions subject to change

E010 Series
Sealed Momentary Pushbutton Switches

CONTACT MATERIAL

OPTION CODE	CONTACT MATERIAL	TERMINAL PLATING	RATINGS	
B	GOLD [1]	GOLD [1]	LOW LEVEL/DRY CIRCUIT	0.4 VA MAX. @ 20 V AC OR DC MAX.
P		MATTE-TIN [6]		
Q	SILVER [4,5]	SILVER [5]	POWER	4 AMPS @ 125 V AC 0R 28 V DC.
G	GOLD OVER SILVER [2,3]	GOLD [3]	LOW LEVEL/DRY CIRCUIT OR POWER	0.4 VA MAX. @ 20 V AC OR DC MAX. OR 4 AMPS @ 125 V AC 0R 28 V DC.

* Note: See Technical Data section of this catalog for RoHS compliant and compatible definitions and specifications.

[1] CONTACTS & TERMINALS: Copper alloy, with gold plate over nickel plate.
[2] END CONTACTS: Coin silver, with gold plate over nickel plate.
[3] CENTER CONTACTS & ALL TERMINALS: Coin silver, with gold plate over nickel plate.
[4] END CONTACTS: Coin silver, silver plated.
[5] CENTER CONTACTS & ALL TERMINALS: Copper alloy, silver plated.
[6] TERMINALS: Copper alloy, with matte-tin over nickel plate.

NOTE: Any models supplied with P, Q, B or G contact material are RoHS compliant.

All models c UL us with all options when ordered with G or Q contact material.
B contact material standard with all terminations except C, Z.
B contact material must be ordered with R2 terminations.
Q contact material standard with C, Z terminations.
P contact materials not available with Z terminations.

SEAL

E EPOXY SEAL

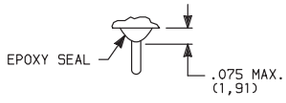

AVAILABLE HARDWARE

Cap

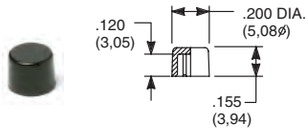

PART NO.
708901000 WHITE
708902000 BLACK
708903000 RED

Material: Nylon
Finish: Gloss

Cap

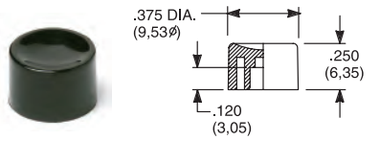

PART NO.
752701000 WHITE
752702000 BLACK
752703000 RED

Material: Nylon
Finish: Gloss

Cap

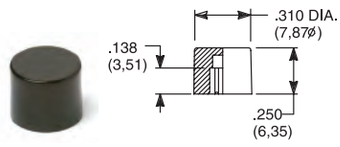

PART NO.
801801000 WHITE
801802000 BLACK
801803000 RED

Material: Nylon
Finish: Gloss

NOTE: Additional nuts, locking rings and lockwashers available separately, see section "Technical Data and Additional Hardware".
Other cap colors available, consult Customer Service Center.

Third Angle Projection

Dimensions are shown: Inches (mm)
Specifications and dimensions subject to change

AVAILABLE HARDWARE

Cap, Snap-fitting plunger

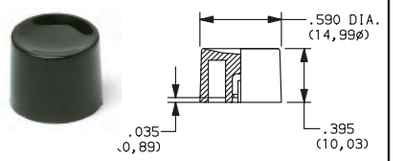

PART NO.

452D01000	WHITE
452D02000	BLACK
452D03000	RED

Material: Nylon
Finish: Gloss

Cap, Snap-fitting plunger

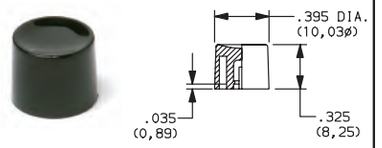

PART NO.

894101000	WHITE
894102000	BLACK
894103000	RED

Material: Nylon
Finish: Gloss

Cap

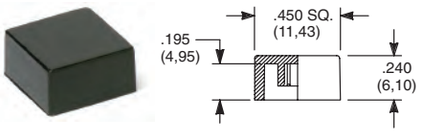

PART NO.

484601000	WHITE
484602000	BLACK
484603000	RED

Material: Nylon
Finish: Gloss

PART NO.

798201000	WHITE
798202263	BLACK
798203000	RED

Material: Nylon
Finish: Matte

NOTE: Additional nuts, locking rings and lockwashers available separately, see section "Technical Data and Additional Hardware".
Other cap colors available, consult Customer Service Center.

Frames snap into panel opening and are independent from switch mounting. Accurate positioning of the PC mounted switch relative to the panel opening is necessary to provide proper clearance between actuator and frame. Available in two basic styles and four panel thicknesses .047-.125 in. Material: Nylon. Finish: Matte.

TYPICAL APPLICATION

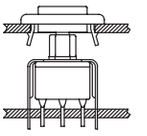

.047" (1,19) PANEL THK.	.062" (1,57) PANEL THK.	.090" (2,29) PANEL THK.	.125" (3,18) PANEL THK.
PART NO.	**PART NO.**	**PART NO.**	**PART NO.**
432502263	432602263	432702263	432802263 BLACK

PANEL MOUNTING

For part numbers
4325xxxxx, 4326xxxxx

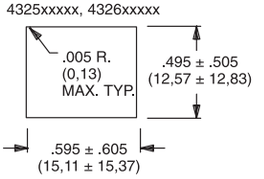

For part numbers
4327xxxxx, 4328xxxxx

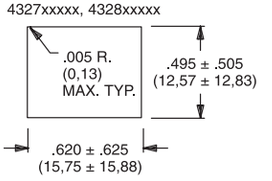

Panel Inserts

Above frames (part nos. 432XXXXXX) are also available with insert which accepts LED for indicator light assembly. Order insert separately from frame. Blank insert panel (without hole for LED) also available. **LED not included.**

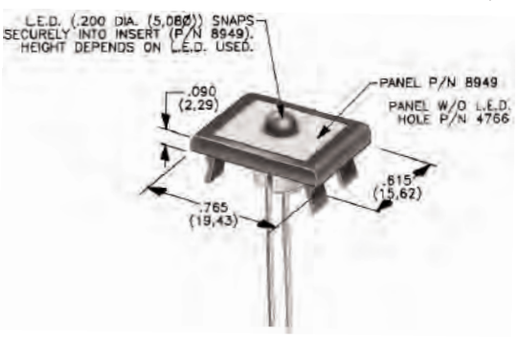

PANEL INSERT WITH HOLE FOR LED	BLANK PANEL INSERT WITHOUT HOLE FOR LED
PART NO.	**PART NO.**
894902000	476602000 BLACK

Special colors, custom markings available, consult Customer Service Center.

Third Angle Projection

Dimensions are shown: Inches (mm)
Specifications and dimensions subject to change

8060 Series
Alternate Action and Momentary Pushbutton Switches

Features/Benefits

- *Long travel*
- *Available with LED*
- *Long life contact design*
- *Epoxy terminal seal compatabile with bottom wash cleaning*
- *RoHS compliant models available*

Typical Applications

- *Instrumentation*
- *Computers and peripherals*
- *Telecommunications and networking equipment*

Models Available

Specifications

CONTACT RATING: Q contact material: 6 AMPS @ 120 V AC or 28 V DC; 3 AMPS @ 250 V AC. See page A-59 for additional ratings.

ELECTRICAL LIFE: 50,000 make-and-break cycles at full load.

CONTACT RESISTANCE: Below 20 mΩ typ. initial @ 2-4 V DC, 100 mA, for both silver and gold plated contacts.

INSULATION RESISTANCE: $10^9\Omega$ min.

DIELECTRIC STRENGTH: 1,000 Vrms min. @ sea level.

OPERATING TEMPERATURE: –30°C to 65°C

SOLDERABILITY: Per MIL-STD-202F method 208D, or EIA RS-186E method 9 (1 hour steam aging).

CAP INSTALLATION FORCE: 10 lbs. maximum permissible.

NOTE: Any models supplied with P, R, S, Q, B or G contact material are RoHS compliant.

NOTE: Specifications and materials listed above are for switches with standard options. For information on specific and custom switches, consult Customer Service Center.

Materials

CASE: Glass filled nylon 6/6 or diallyl phthalate (DAP), flame retardant (UL 94V-0).

PLUNGER: S, S1, S2 Options: Glass filled nylon or glass filled polyester (PBT) (UL 94V-0). L, L1 Options: Brass, nickel plated.

CAP & FRAME: Nylon, black standard.

BUSHING: Brass or zinc, nickel plated.

HOUSING: Stainless steel.

SWITCH SUPPORT: Brass or steel, matte-tin plated.

END CONTACTS: Q contact material: Coin silver, silver plated. See page A-59 for additional contact materials.

CENTER CONTACT & ALL TERMINALS: Q contact material: Copper alloy, silver plated. See page A-59 for additional contact materials.

TERMINAL SEAL: Epoxy. Refer to soldering and cleaning in Technical Data Chapter.

HARDWARE: Nut & Locking Ring: Brass, nickel plated; Lockwasher: Steel, nickel plated.

Build-A-Switch

To order, simply select desired option from each category and place in the appropriate box. Available options are shown and described on pages A-53 thru A-61. For additional options not shown in catalog, consult Customer Service Center. All models have epoxy terminal seal and are compatible with all "bottom-wash" PCB cleaning methods.

Switch Function
- **8161** SPDT On-On
- **8168** SPDT On-Mom.
- **8261** DPDT On-On

Actuator or Plunger
- **S** .710" high plunger with .375" dia. cap
- **J80** Snap-in
- **J81** Snap-in with frame
- **J82** Snap-in with frame for LED
- **J86** Snap-in with frame & LED
- **L** .740" high plunger with .395" dia. cap
- **L1** .740" high plunger with .590" dia. cap
- **S1** .615" high plunger with .200" dia. cap
- **S2** .710" high plunger with .310" dia. cap

Bushing
- **H** .300" high, flat, hi torque
- **H9** .300" high, flat, hi torque
- **NONE** No bushing choice required
- **Y3** 7.6mm, keyway

Terminations
- **A** Right angle, PC thru-hole
- **AV2** Vertical right angle, PC thru-hole
- **C** PC Thru-hole
- **Z** Solder lug
- **A3** Right angle, snap-in, PC thru-hole
- **AV3** Vertical right angle, snap-in, PC thru-hole
- **V3** .460" high, V-bracket
- **V4** .630" high, V-bracket
- **V6** .460" high, V-bracket
- **V21** .555" high, snap-in V-bracket
- **V31** .460" high, snap-in V-bracket
- **W** .750" long, wire wrap
- **Z3** Quick connect

Contact Material
- **B** Gold
- **P** Gold, matte-tin
- **Q** Silver
- **S** Silver, matte-tin
- **G** Gold over silver
- **R** Gold over silver, matte-tin

Seal
- **E** Epoxy
- **I** Epoxy potted base

Cap Color
- **2** Black
- **1** White
- **3** Red
- **4** Orange
- **5** Yellow
- **9** Gray

Frame Color
- **2** Black

LED Color
- **3** Red
- **NONE** Models without LED

8060 Series
Alternate Action and Momentary Pushbutton Switches

SWITCH FUNCTION

NO. POLES	MODEL NO.	SWITCH FUNCTION POS. 1	SWITCH FUNCTION POS. 2	CONNECTED TERMINALS POS. 1	CONNECTED TERMINALS POS. 2	SCHEMATIC
		C&K marking this side		C&K marking this side		
SP	8161	ON	ON	2-3	2-1	SPDT
	8168	ON	MOM.	2-3	2-1	
DP	8261	ON	ON	2-3,5-6	2-1,5-4	DPDT

SPDT

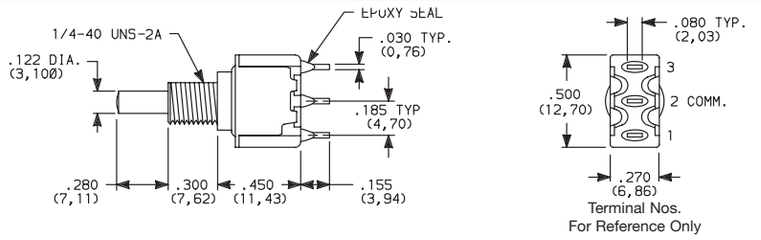

Part number shown: 8161SHZQE

DPDT

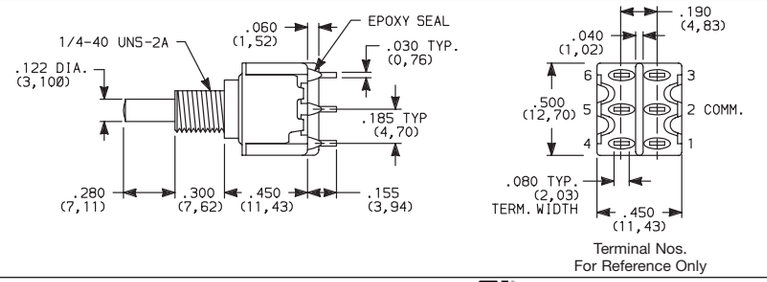

Part number shown: 8261SHZQE

MOM. = Momentary

All models c UL us with all options when ordered with G or Q contact material.

ACTUATOR—SNAP-IN FRONT MOUNT

CAP COLOR

ACTUATOR OR PLUNGER

OPTION CODE	CAP COLOR
2	BLACK
1	WHITE
3	RED
4	ORANGE
5	YELLOW
9	GRAY

Cap Finish: matte.
Other colors available, consult Customer Service Center.

Available with C, W, Z or Z3 terminations.

NOTE: Caps & frames available separately, see pages A-60 and A-61.

J80 SNAP-IN

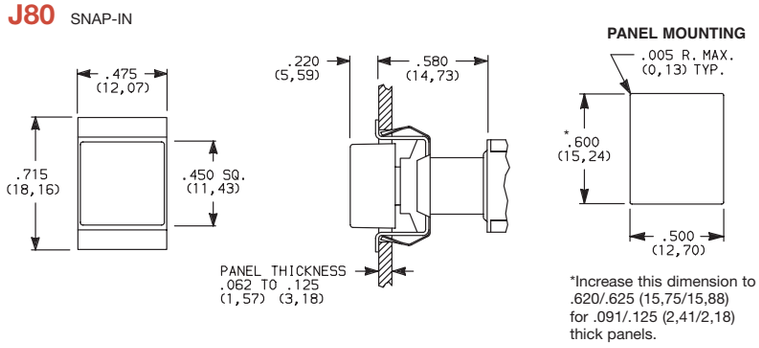

J81 SNAP-IN WITH BLACK FRAME

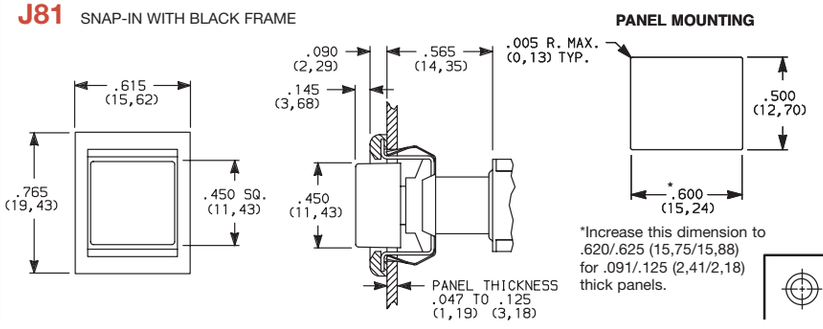

Third Angle Projection

Dimensions are shown: Inches (mm)
Specifications and dimensions subject to change

8060 Series
Alternate Action and Momentary Pushbutton Switches

ACTUATOR—SNAP-IN FRONT MOUNT

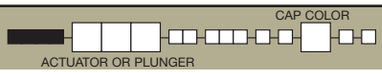

J82 SNAP-IN WITH BLACK FRAME FOR LED

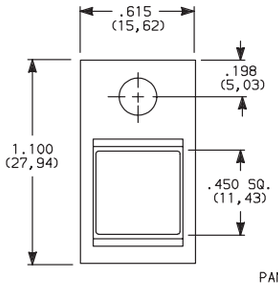

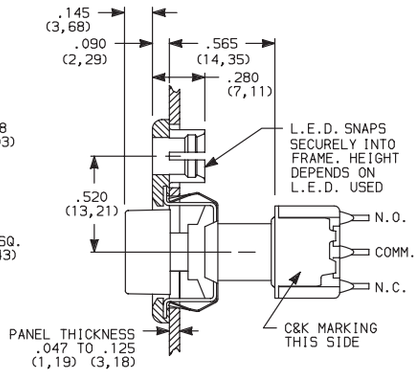

PANEL MOUNTING

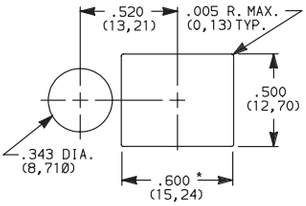

* Increase this dimension to .620/.625 (15,75/15,88) for .091/.125 (2,31/3,18) thick panels.

Available with C, W, Z or Z3 terminations.

LED not included.
For LED information, see page A-61.

NOTE: Caps & frames available separately, see pages A-60 and A-61.

Other colors available, consult Customer Service Center.

OPTION CODE	CAP COLOR
2	BLACK
1	WHITE
3	RED
4	ORANGE
5	YELLOW
9	GRAY

ACTUATOR—SNAP-IN FRONT MOUNT

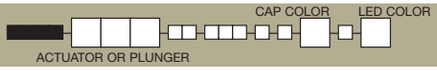

J86 SNAP-IN WITH BLACK FRAME AND LED

8161J86ZQE223
SPDT

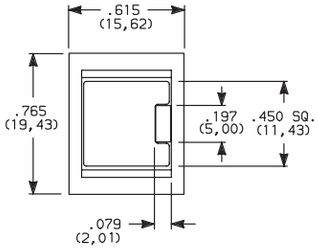

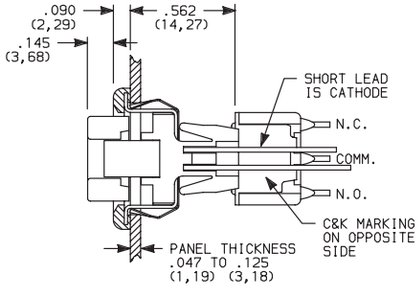

PANEL MOUNTING

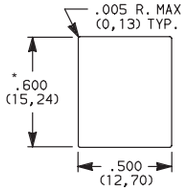

* Increase this dimension to .620/.625 (15,75/15,88) for .091/.125 (2,31/3,18) thick panels.

Available with C, W, Z or Z3 terminations and SPDT models only.

NOTE: Caps & frames available separately, see pages A-60 and A-61.

Other colors available, consult Customer Service Center.

OPTION CODE	CAP COLOR
2	BLACK
1	WHITE
3	RED
4	ORANGE
5	YELLOW
9	GRAY

OPTION CODE	LED COLOR
3	RED

For LED information, see page A-61.

Third Angle Projection

Dimensions are shown: Inches (mm)
Specifications and dimensions subject to change

PLUNGER

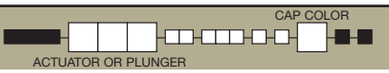

S PLUNGER WITH CAP P/N 7527

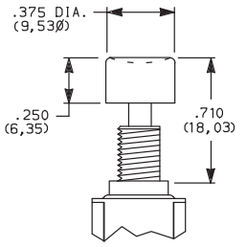

S1 PLUNGER WITH CAP P/N 7089

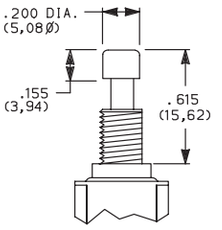

S2 PLUNGER WITH CAP P/N 8018

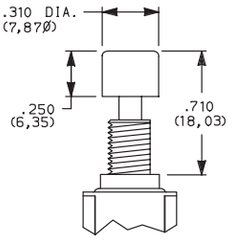

S, S1, S2 plunger dimensions.

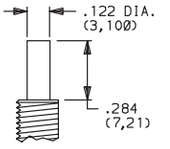

Plunger material: Glass filled nylon or glass filled polyester (UL 94V-0).

L PLUNGER WITH CAP P/N 8941

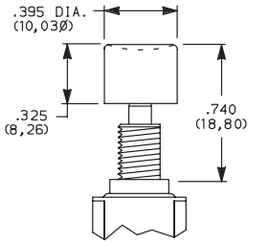

L1 PLUNGER WITH CAP P/N 8940

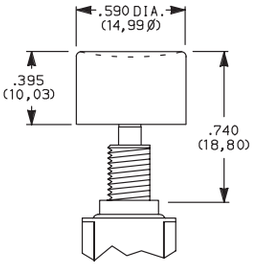

L, L1 plunger dimensions.

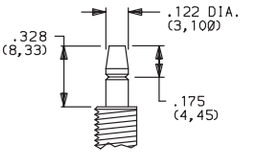

Plunger Material: Brass, chrome plated.

OPTION CODE	CAP COLOR
2	BLACK
1	WHITE
3	RED
4	ORANGE
5	YELLOW
9	GRAY

Cap Finish: gloss. Cap supplied not installed. Other colors available, consult Customer Service Center.

NOTE: When selecting plunger and cap option, bushing selection must also be made, see below.

BUSHING

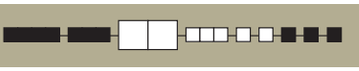

H .300" HIGH THREADED, FLAT

H9 .300" HIGH UNTHREADED, FLAT

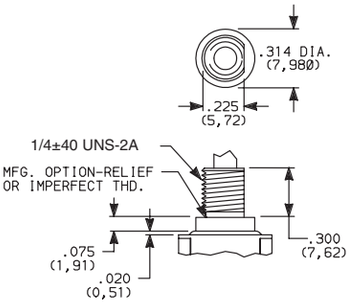

H bushing standard with C, W, Z or Z3 terminations.
H9 bushing standard with A, A3, AV2, AV3, or V3-V31 terminations.

Withstands 12 in./lbs. of torque with no distortion.

NONE NO BUSHING CHOICE REQUIRED (JXX ACTUATORS)

Y3 7.6mm THREADED, KEYWAY

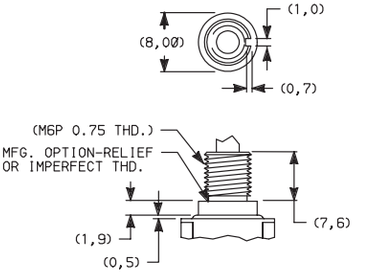

Withstands 12 in./lbs. of torque with no distortion.

NOTE: When selecting bushing option, plunger selection must also be made, see above. No bushing option choice required when any JXX actuator option is selected.

PANEL MOUNTING

1/4 IN. BUSHING

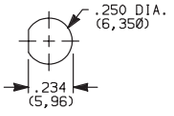

Without Locking Ring

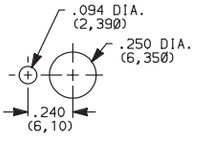

With Standard Locking Ring

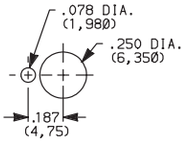

With Small Locking Ring

METRIC BUSHING

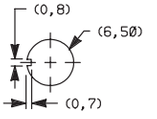

Without Locking Ring

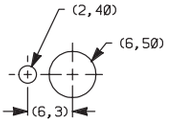

With Locking Ring

NOTE. Two mounting nuts, locking ring and lockwasher supplied standard with threaded bushings. Optional mounting nut and locking ring styles and finishes available, see section "Technical Data and Additional Hardware".

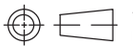

Third Angle Projection

Dimensions are shown: Inches (mm)
Specifications and dimensions subject to change

8060 Series
Alternate Action and Momentary Pushbutton Switches

TERMINATIONS

C PC THRU-HOLE

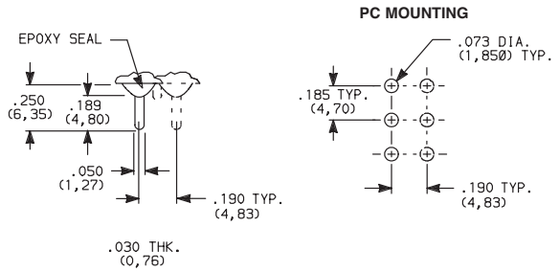

SPDT and DPDT

Z SOLDER LUG

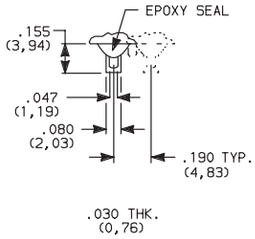

SPDT and DPDT

Not available with P, S or R contact material.

Z3 QUICK CONNECT

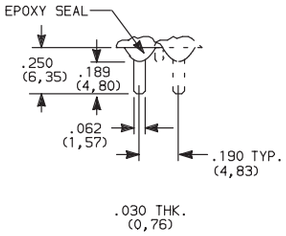

SPDT and DPDT

Not available with P, S or R contact material.
Mating quick connector available;
order part number 530100000, page A-61.

W WIRE WRAP

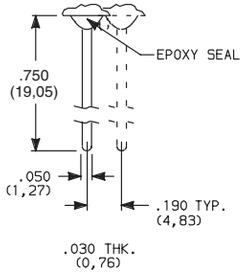

SPDT and DPDT

A RIGHT ANGLE, PC THRU-HOLE

8161SH9ABE2
SPDT

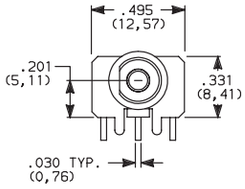

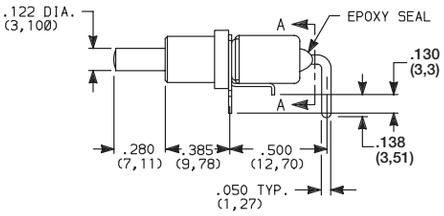

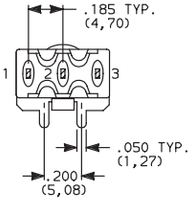

SECTION A-A

A3 RIGHT ANGLE, SNAP-IN, PC THRU-HOLE

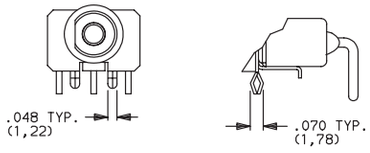

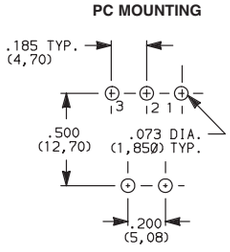

NOTE: PC pattern must clear switch support leg.

Not available with I seal.
Terminal bend radii and lead-in manufacturing option.

Third Angle Projection

Dimensions are shown: Inches (mm)
Specifications and dimensions subject to change

TERMINATIONS

A RIGHT ANGLE, PC THRU-HOLE

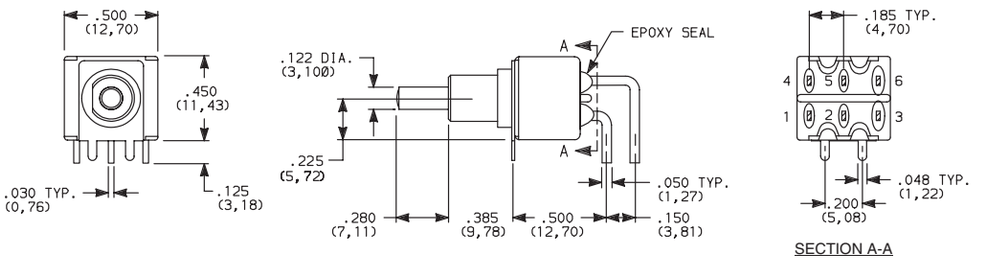

8261SH9ABE2
DPDT

A3 RIGHT ANGLE, SNAP-IN, PC THRU-HOLE

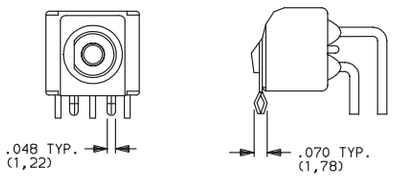

PC MOUNTING

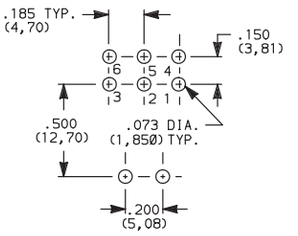

Not available with I seal.
Terminal bend radii and lead-in manufacturing option.

AV2 VERTICAL RIGHT ANGLE, PC THRU-HOLE, .150" PITCH

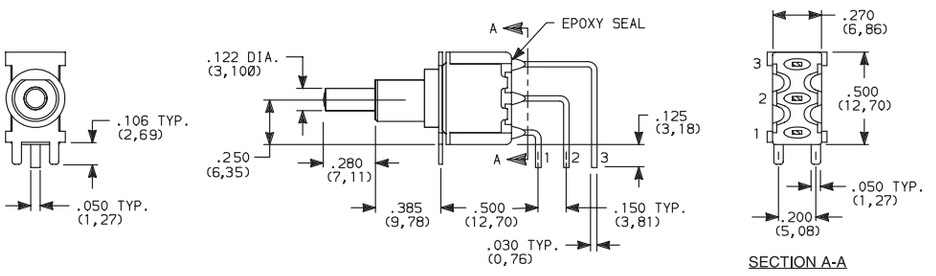

8161SH9AV2BE2
SPDT

AV3 VERTICAL RIGHT ANGLE, SNAP-IN, PC THRU-HOLE, .150" PITCH

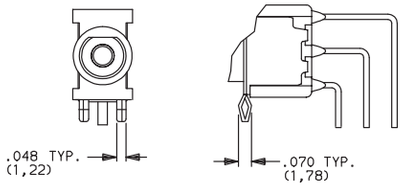

PC MOUNTING

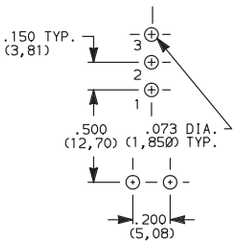

Not available with I seal.
Terminal bend radii and lead-in manufacturing option.

Third Angle Projection

Dimensions are shown: Inches (mm)
Specifications and dimensions subject to change

8060 Series
Alternate Action and Momentary Pushbutton Switches

TERMINATIONS

AV2 VERTICAL RIGHT ANGLE, PC THRU-HOLE, .150" PITCH

8261SH9AV2BE2
DPDT

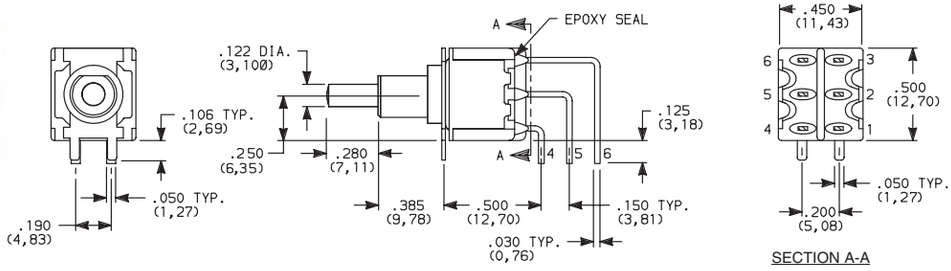

AV3 VERTICAL RIGHT ANGLE, SNAP-IN, PC THRU-HOLE, .150" PITCH

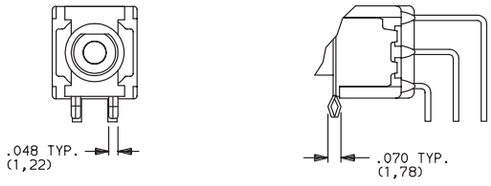

PC MOUNTING

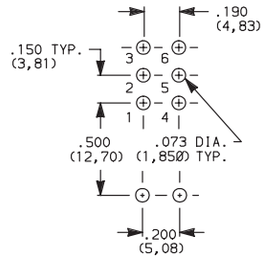

Not available with I seal.
Terminal bend radii and lead-in manufacturing option.

V6 VERTICAL MOUNT, V-BRACKET
V21 VERTICAL MOUNT, V-BRACKET, SNAP-IN

8161SH9__BE2
SPDT

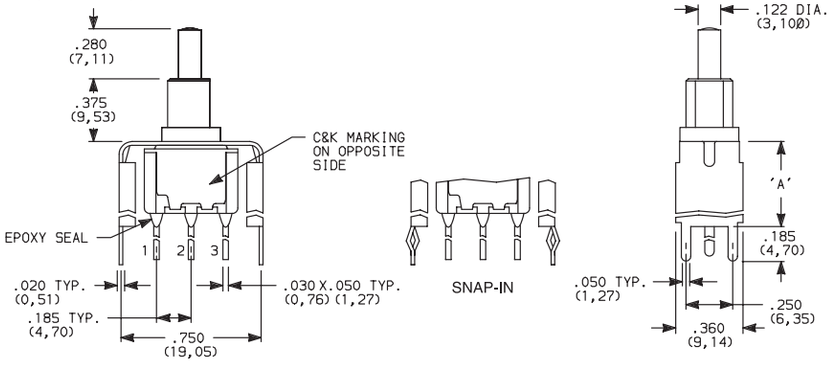

PC MOUNTING

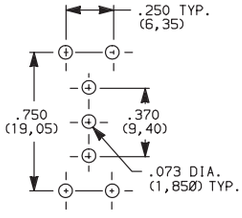

OPTION CODE	DIM 'A'
V21	.555 (14,10)
V6	.460 (11,68)

Not available with I seal.

V6 VERTICAL MOUNT, V-BRACKET
V21 VERTICAL MOUNT, V-BRACKET, SNAP-IN

8261SH9__BE2
DPDT

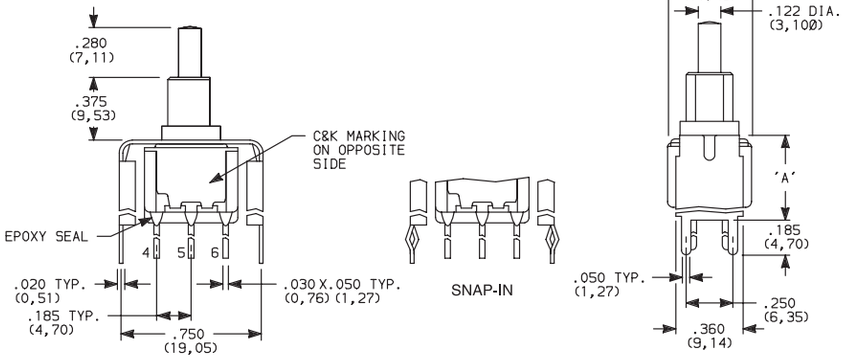

PC MOUNTING

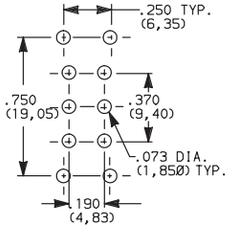

OPTION CODE	DIM 'A'
V21	.555 (14,10)
V6	.460 (11,68)

Not available with I seal.

Third Angle Projection

Dimensions are shown: Inches (mm)
Specifications and dimensions subject to change

TERMINATIONS

V3, V4 VERTICAL MOUNT, V-BRACKET

V31 VERTICAL MOUNT, V-BRACKET, SNAP-IN

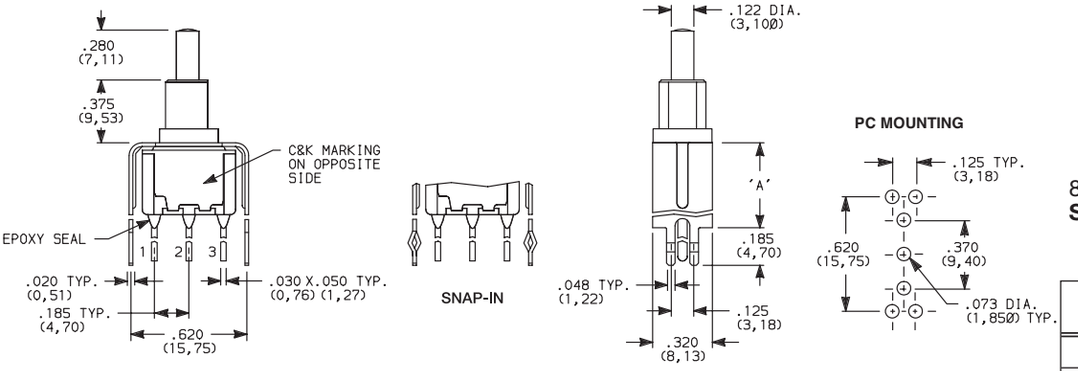

8161SH9__BE2
SPDT

OPTION CODE	DIM 'A'
V3, V31	.460 (11,68)
V4	.630 (16,00)

Not available with I seal.

V3, V4 VERTICAL MOUNT, V-BRACKET

V31 VERTICAL MOUNT, V-BRACKET, SNAP-IN

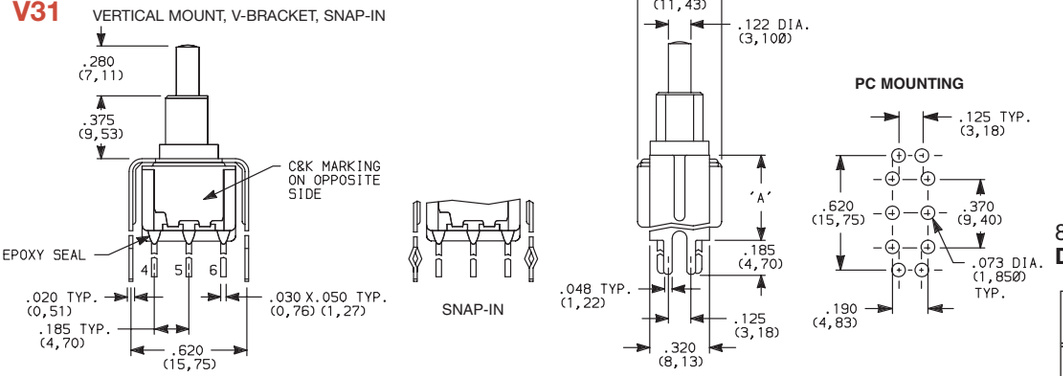

8261SH9__BE2
DPDT

OPTION CODE	DIM 'A'
V3, V31	.460 (11,68)
V4	.630 (16,00)

Not available with I seal.

CONTACT MATERIAL

OPTION CODE	CONTACT MATERIAL	TERMINAL PLATING	RATINGS	
B	GOLD [1]	GOLD [1]	LOW LEVEL/DRY CIRCUIT	0.4 VA MAX. @ 20 V AC OR DC MAX.
P		MATTE-TIN [6]		
Q	SILVER [4,5]	SILVER [5]	POWER	6 AMPS @ 120 V AC OR 28 V DC; 3 AMPS @ 250 V AC.
S		MATTE-TIN [6]		
G	GOLD OVER SILVER [2,3]	GOLD [3]	LOW LEVEL/DRY CIRCUIT OR POWER	0.4 VA MAX @ 20 V AC OR DC MAX. OR 6 AMPS @ 120 V AC OR 28 V DC; 3 AMPS @ 250 V AC.
R		MATTE-TIN [6]		

* Note: See Technical Data section of this catalog for RoHS compliant and compatible definitions and specifications.

[1] CONTACTS & TERMINALS: Copper alloy, with gold plate over nickel plate.

[2] END CONTACTS: Coin silver, with gold plate over nickel plate.

[3] CENTER CONTACTS & ALL TERMINALS: Copper alloy, with gold plate over nickel plate.

[4] END CONTACTS: Coin silver, silver plated.

[5] CENTER CONTACT & ALL TERMINALS: Copper alloy, silver plated.

[6] TERMINALS: Copper alloy, with matte-tin over nickel plate.

NOTE: Any models supplied with P, S, R,Q, B or G contact material are RoHS compliant.

All models c UL us with all options when ordered with S, R, G, or Q contact material.

B contact material standard with all terminations except C, Z & Z3.

Q contact material standard with C, Z & Z3 terminations.

P, S & R contact materials not available with Z & Z3 terminations.

Third Angle Projection

Dimensions are shown: Inches (mm)
Specifications and dimensions subject to change

8060 Series
Alternate Action and Momentary Pushbutton Switches

SEAL

E EPOXY SEAL

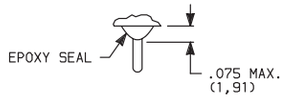

I EPOXY POTTED BASE

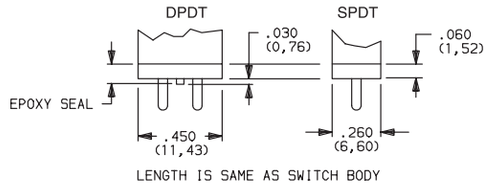

NOTE: Available with C, W, Z, Z3 terminations only.

AVAILABLE HARDWARE

Cap

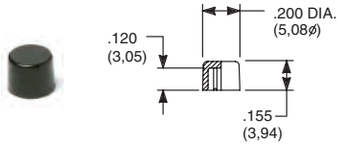

PART NO.

708901000	WHITE
708902000	BLACK
708903000	RED
708904000	ORANGE
708905000	YELLOW
708909000	GRAY

Material: Nylon
Finish: Gloss

Cap

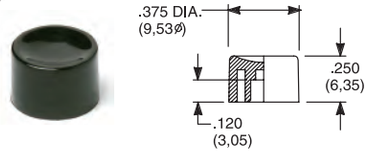

PART NO.

752701000	WHITE
752702000	BLACK
752703000	RED
752704000	ORANGE
752705000	YELLOW
752709000	GRAY

Material: Nylon
Finish: Gloss

Cap

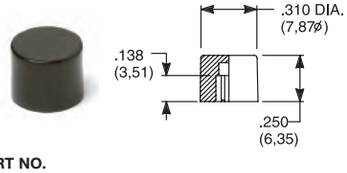

PART NO.

801801000	WHITE
801802000	BLACK
801803000	RED
801804000	ORANGE
801805000	YELLOW
801809000	GRAY

Material: Nylon
Finish: Gloss

Cap, Snap-fitting plunger

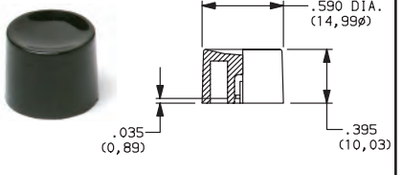

PART NO.

452D01000	WHITE
452D02000	BLACK
452D03000	RED
452D04000	ORANGE
452D05000	YELLOW
452D09000	GRAY

Material: Nylon
Finish: Gloss

Cap, Snap-fitting plunger

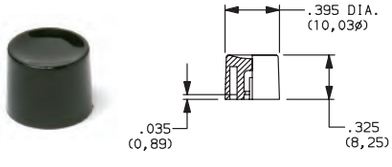

PART NO.

894101000	WHITE
894102000	BLACK
894103000	RED
894104000	ORANGE
894105000	YELLOW
894109000	GRAY

Material: Nylon
Finish: Gloss

Cap, J80, J81 & J82 options only

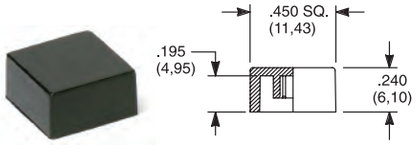

PART NO.

484601000	WHITE
484602000	BLACK
484603000	RED
484604000	ORANGE
484605000	YELLOW
484609000	GRAY

Material: Nylon
Finish: Gloss

PART NO.

798201000	WHITE
798202263	BLACK
798203000	RED
798204000	ORANGE
798205000	YELLOW
798209000	GRAY

Material: Nylon
Finish: Matte

Cap, J86 & J96 options only

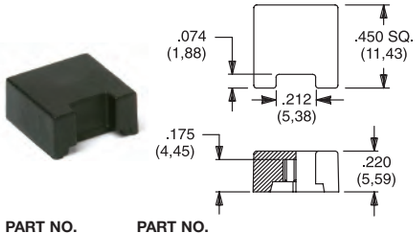

PART NO.

459701000	WHITE
459702000	BLACK
459703000	RED
459704000	ORANGE
459705000	YELLOW
459709000	GRAY

Material: Nylon
Finish: Gloss

PART NO.

476801000	WHITE
476802000	BLACK
476803000	RED
476804000	ORANGE
476805000	YELLOW
476809000	GRAY

Material: Nylon
Finish: Matte

Frame

PART NO.

615602263 BLACK

Material: Nylon
Finish: Matte

Frame

PART NO.

613302263 BLACK

Material: Nylon
Finish: Matte

NOTE: Additional nuts, locking rings and lockwashers available separately, see section "Technical Data and Additional Hardware".
Other cap & frame colors available, consult Customer Service Center.

Third Angle Projection

Dimensions are shown: Inches (mm)
Specifications and dimensions subject to change

AVAILABLE HARDWARE

Fits Z3 Termination female connector

PART NO.
530100000
Available in loose pieces.

Frames snap into panel opening and are independent from switch mounting. Accurate positioning of the PC mounted switch relative to the panel opening is necessary to provide proper clearance between actuator and frame. Available in two basic styles and four panel thicknesses .047-.125 in. Material: Nylon. Finish: Matte.

TYPICAL APPLICATION

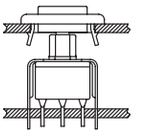

.047" (1,19) PANEL THK.	.062" (1,57) PANEL THK.	.090" (2,29) PANEL THK.	.125" (3,18) PANEL THK.
PART NO.	**PART NO.**	**PART NO.**	**PART NO.**
432502263	**432602263**	**432702263**	**432802263** BLACK

PANEL MOUNTING

For part numbers 4325xxxxx, 4326xxxxx

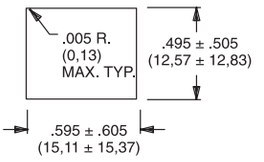

For part numbers 4327xxxxx, 4328xxxxx

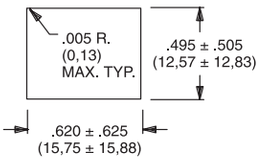

Panel Inserts

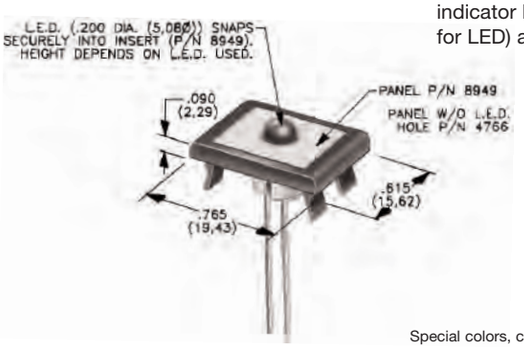

Above frames (part nos. 432XXXXXX) are also available with insert which accepts LED for indicator light assembly. Order insert separately from frame. Blank insert panel (without hole for LED) also available. **LED not included.**

PANEL INSERT WITH HOLE FOR LED	BLANK PANEL INSERT WITHOUT HOLE FOR LED
PART NO.	**PART NO.**
894902000	**476602000** BLACK

Special colors, custom markings available, consult Customer Service Center.

LED INFORMATION

SWITCHES WITH LED SUPPLIED: J86 OPTION:
Rectangular LEDs are supplied on 8060 Series pushbutton switches with J86 option. These LEDs are factory installed and are not replaceable. The following specifications apply:

OPTION CODE	COLOR	TYP. INTENSITY	TYP. FORWARD VOLTAGE	TYP. FORWARD CURRENT	MAX RATINGS AT 25°C AMBIENT TEMPERATURE		
					FORWARD VOLTAGE	CONTINUOUS FORWARD CURRENT	POWER DISSIPATION
6	Green	1.0 mcd	2.1 V	20 mA	2.5 V	50 mA	125 mW
3	Red*	0.5 mcd		10 mA		30 mA	75 mW
5	Yellow	4.0 mcd		20 mA		50 mA	125 mW

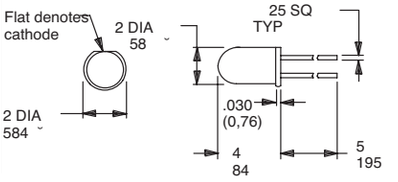

Suggested LED for J82 & J84 options
Dimensions for reference only

Process Information: Soldering to LED leads must be completed within 5 seconds at 500°F (260°C) maximum.
Caution: Circuit elements must limit forward current of LED to 50mA max. continuous.
* Extra-bright red LED available (typ. intensity 4.5 mcd), consult Customer Service Center.
LEDs are not supplied with J82 & J84 options. LED snaps into switch frame surrounding actuator and is wired externally.

Third Angle Projection

Dimensions are shown: Inches (mm)
Specifications and dimensions subject to change

8500 Series
Subminiature Pushbutton Switches

Features/Benefits

- *Pre-travel or over-travel models available*
- *Ratings up to 3 AMPS*
- *Reliable contact design*
- *RoHS compliant*

Typical Applications

- *Detection*
- *Telecommunications and networking equipment*
- *Computers and peripherals*

Models Available

Specifications

CONTACT RATING: Q contact material (853X Models): 1 AMP @ 120 V AC or 28 V DC; (855X Models): 3 AMPS @ 120 V AC or 28 V DC. See page A-65 for additional ratings.

ELECTRICAL LIFE:
853X MODELS: 250,000 actuations at full load.
855X MODELS: 10,000 actuations at full load.

CONTACT RESISTANCE: Below 30 mΩ typ. initial @ 2-4 V DC, 100 mA, for both silver and gold plated contacts.

INSULATION RESISTANCE: $10^9\Omega$ min.

DIELECTRIC STRENGTH: 1,000 Vrms min. @ sea level.

OPERATING TEMPERATURE: –30°C to 65°C.

TORQUE SPECS: T, T1 15/32" bushings - 50 in. lbs max. All other 1/4 -40 bushing types 12 in. lbs max.

Materials

CASE: Glass filled phenolic or diallyl phthalate (DAP) (UL 94V-0).

PLUNGER: Phenolic or glass filled polyester, black standard(UL94V-0).

CAP & FRAME: Nylon, black, standard.

BUSHING: Brass, nickel plated.

CONTACTS: Q contact material: Coin silver, silver plated. See page A-65 for additional contact materials.

TERMINALS: Q contact material: Copper alloy, silver plated. See page A-65 for additional contact materials.

TERMINAL SEAL: Epoxy.

HARDWARE: Nut: Brass, nickel plated; Lockwasher: Steel, bright nickel plated.

NOTE: Any models supplied with Q, B or G contact material are RoHS compliant.

NOTE: Specifications and materials listed above are for switches with standard options. For information on specific and custom switches, consult Customer Service Center.

Build-A-Switch

To order, simply select desired option from each category and place in the appropriate box. Available options are shown and described on pages A-63 thru A-66. For additional options not shown in catalog, consult Customer Service Center. All models have epoxy terminal seal and are compatible with all "bottom-wash" PCB cleaning methods.

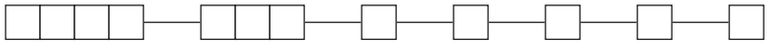

Switch Function
- **8531** SPST Off-Mom. 1 Amp
- **8532** SPST Off-Mom. 1 Amp
- **8533** SPST On-Mom. 1 Amp
- **8534** SPST On-Mom. 1 Amp
- **8551** SPST Off-Mom. 3 Amps
- **8552** SPST Off-Mom. 3 Amps

Actuator or Plunger
- **M** .150" high
- **J81** Snap-in with frame
- **J82** Snap-in with frame for LED
- **S** .210" high
- **T** 15/32 bushing
- **T1** 15/32 bushing with frame (8532 and 8534 only)

Terminations
- **Z** Solder lug
- **AV*** Right angle, PC thru-hole
- **C** PC Thru-hole

Contact Material
- **Q** Silver
- **B** Gold
- **G** Gold over silver

Seal
- **E** Epoxy
- **D** No epoxy seal

Cap or Plunger Color
- **2** Black
- **1** White
- **3** Red
- **9** Gray

Frame Color
- **2** Black
- **NONE** Models without frame

* Available with M or S plunger models, and B contact material only.

Dimensions are shown: Inches (mm)
Specifications and dimensions subject to change

SWITCH FUNCTION

NO. POLES	MODEL NO.	RATING	SWITCH FUNCTION POS. 1	SWITCH FUNCTION POS. 2	TOTAL TRAVEL	ACTUATION FORCE	SCHEMATIC
SP	8531	1 AMP	OFF	MOM.	.095 (2,41) TYP. with overtravel .042 (1,07) TYP.	7.7 oz (220g) TYP.	N.O. with overtravel
	8551	3 AMPS					

SPST

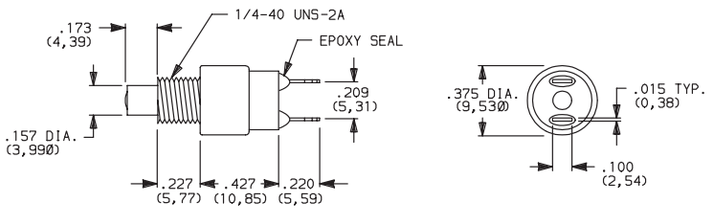

Part number shown: 8531MZQE2

NO. POLES	MODEL NO.	RATING	SWITCH FUNCTION POS. 1	SWITCH FUNCTION POS. 2	TOTAL TRAVEL	ACTUATION FORCE	SCHEMATIC
SP	8532	1 AMP	OFF	MOM.	.050 (1,27) TYP.	6 oz (170g) TYP.	N.O.
	8552	3 AMPS					

SPST

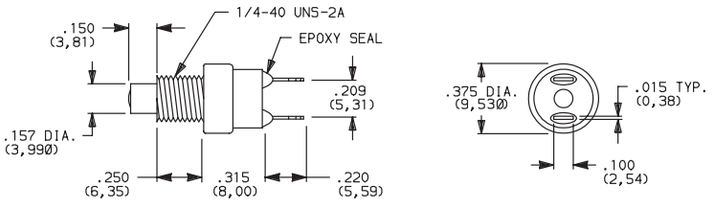

Part number shown: 8532MZQE2

NO. POLES	MODEL NO.	RATING	SWITCH FUNCTION POS. 1	SWITCH FUNCTION POS. 2	TOTAL TRAVEL	ACTUATION FORCE	SCHEMATIC
SP	8533	1 AMP	ON	MOM.	.080 (2,03) TYP. with pretravel .057 (1,45) TYP.	11.5 oz (456 g) TYP.	N.C. with pretravel
	8534	1 AMP	ON	MOM.	.032 (0,81) TYP. with overtravel .028 (0,71) TYP.	10.3 oz (282g) TYP.	N.C. with overtravel

SPST

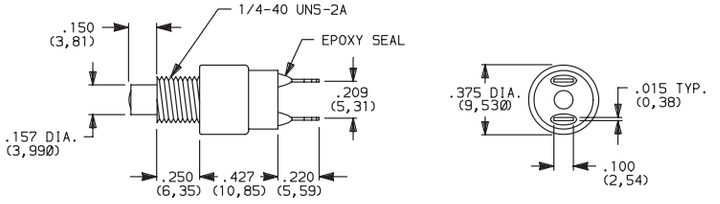

Part number shown: 8533MZQE2

MOM. = Momentary

All models with all options when ordered with G or Q contact material.

Third Angle Projection

Dimensions are shown: Inches (mm)
Specifications and dimensions subject to change

8500 Series
Subminiature Pushbutton Switches

PLUNGER

M .150" HIGH PLUNGER

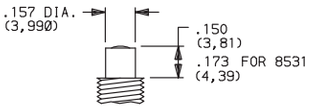

S .210" HIGH PLUNGER

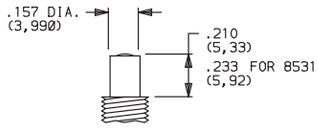

PANEL MOUNTING

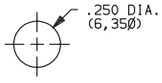

OPTION CODE	PLUNGER COLOR
2	BLACK
3	RED

NOTE: One mounting nut and lockwasher supplied with all actuators (except T actuator: two nuts supplied).

ACTUATOR

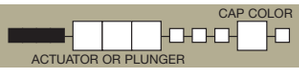

T 15/32 BUSHING

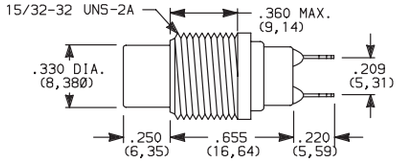

NOTE: No frame color choice required.

T1 15/32 BUSHING WITH FRAME

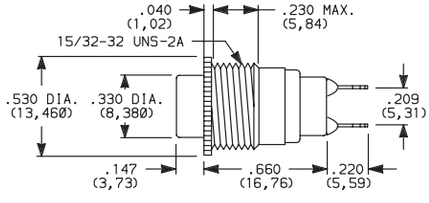

NOTE: No frame color choice required.
Available with 8532 and 8534 models only.

PANEL MOUNTING

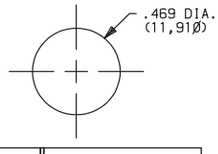

OPTION CODE	CAP COLOR
2	BLACK
1	WHITE
3	RED
9	GRAY

Cap Finish: gloss. Other colors available, consult Customer Service Center.

One mounting nut and lockwasher supplied with all actuators (except T actuator: two nuts supplied).

NOTE: Caps available for plunger options, see page A-65.

ACTUATOR—SNAP-IN FRONT MOUNT

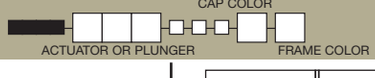

J81 SNAP-IN WITH FRAME

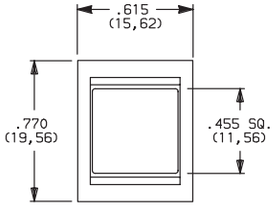

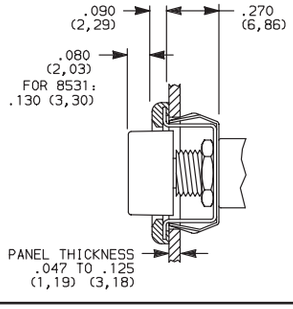

OPTION CODE	CAP AND FRAME COLOR
2	BLACK

Cap and Frame Finish: matte.
Other colors available,
consult Customer Service Center.

One mounting nut and lockwasher supplied with all actuators.

NOTE: Caps & frames available separately, see pages A-65 and A-66.

PANEL MOUNTING

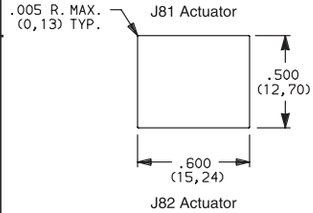

J82 SNAP-IN WITH FRAME FOR LED

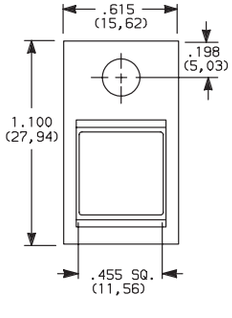

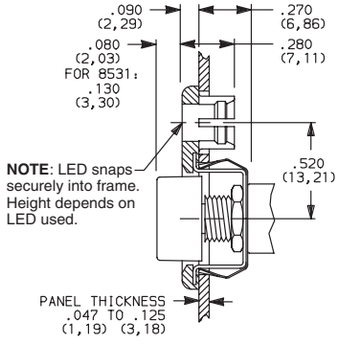

NOTE: LED snaps securely into frame. Height depends on LED used.

LED not included.
For LED information, see page A-66.

J82 Actuator

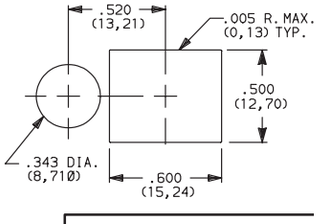

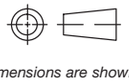
Third Angle Projection

Dimensions are shown: Inches (mm)
Specifications and dimensions subject to change

TERMINATIONS

Z SOLDER LUG

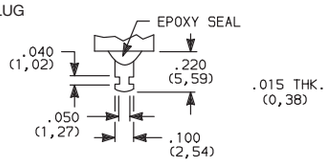

C PC THRU-HOLE

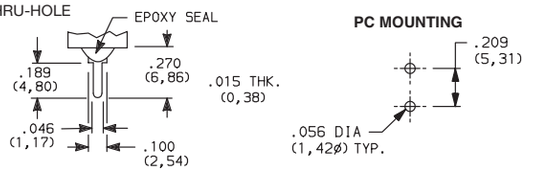

AV RIGHT ANGLE, PC THRU-HOLE

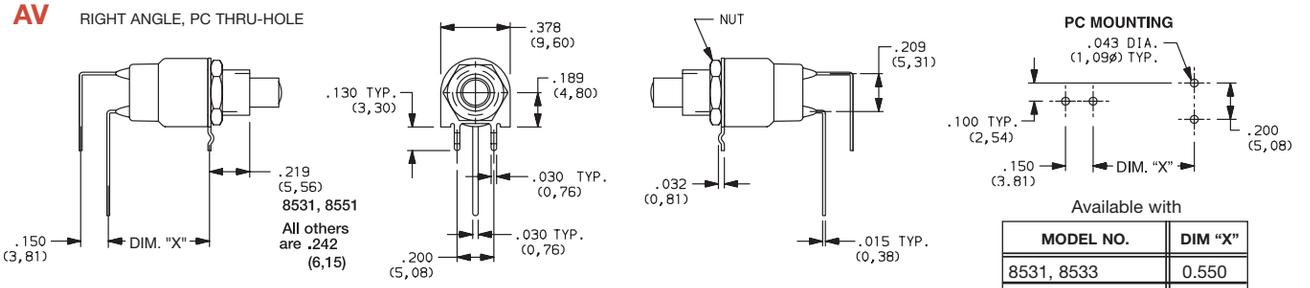

NOTE: Available with M or S plunger models, and B contact material only.

Available with

MODEL NO.	DIM "X"
8531, 8533	0.550
8532, 8534	0.438

CONTACT MATERIAL

OPTION CODE	RoHS COMPLIANT *	RoHS COMPATIBLE *	TERMINAL PLATING	CONTACT MATERIAL	RATINGS	
B	YES	YES	GOLD [1]	GOLD	LOW LEVEL/DRY CIRCUIT	0.4 VA MAX. @ 20 V AC OR DC MAX.
Q	YES	YES	SILVER [4]	SILVER [5]	POWER	853X MODELS: 1 AMP @ 120 V AC OR 28 V DC. 855X MODELS: 3 AMPS @ 120 V AC OR 28 V DC.
G	YES	YES	GOLD OVER SILVER [2]	GOLD [3]	LOW LEVEL/DRY CIRCUIT OR POWER	0.4 V MAX @20 V AC OR DC MAX. OR 853X MODELS: 1 AMP @ 120 V AC OR 28 V DC. 855X MODELS: 3 AMPS @120 V AC OR 28 V DC.

* Note: See Technical Data section of this catalog for RoHS compliant and compatible definitions and specifications.

[1] CONTACTS & TERMINALS: Copper alloy, with gold plate over nickel plate.
[2] CONTACTS: Coin silver, with gold plate over nickel plate.
[3] TERMINALS: Copper alloy, with gold plate over nickel plate.
[4] CONTACTS: Coin silver, silver plated.
[5] TERMINALS: Copper alloy, silver plated.

NOTE: Any models supplied with Q, B or G contact material are RoHS compliant.

All models ®ᴿᵁ with all options when ordered with G or Q contact material.

Q contact material standard with C, Z terminations.

8551 & 8552 available with Q contact material only.

SEAL

E EPOXY SEAL

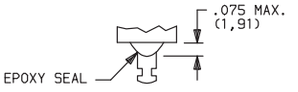

REPLACEMENT HARDWARE

Cap for 0.157" dia. plungers

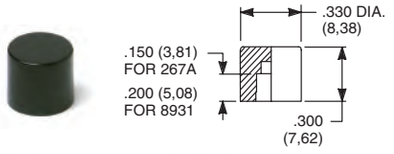

PART NO.		PART NO.	
267A01000	WHITE	893101000	WHITE
267A02000	BLACK	893102000	BLACK
267A03000	RED	893103000	RED
267A09000	GRAY	893109000	GRAY
85X2T, 8534T models only		85X1T, 8532T1, 8533T, 8534T1 models only	
Material: Nylon Finish: Gloss		Material: Nylon Finish: Gloss	

Cap, J80, J81 & J 82 options only

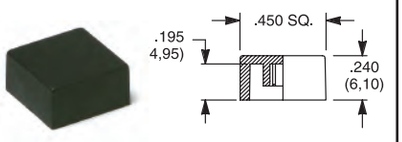

PART NO.

448901000 WHITE
448902000 BLACK
448903000 RED
448909000 GRAY

Material: Nylon
Finish: Gloss or matte

Frame

PART NO.

613302263 BLACK

Material: Nylon
Finish: Matte

Other colors available, consult Customer Service Center.

Third Angle Projection

Dimensions are shown: Inches (mm)
Specifications and dimensions subject to change

8500 Series
Subminiature Pushbutton Switches

AVAILABLE HARDWARE

Frame

PART NO.
615602263 BLACK

Material: Nylon
Finish: Matte

NOTE: Additional nuts, locking rings and lockwashers available separately, see section "Technical Data and Additional Hardware".
Other colors available, consult Customer Service Center.

Frames snap into panel opening and are independent from switch mounting. Accurate positioning of the PC mounted switch relative to the panel opening is necessary to provide proper clearance between actuator and frame. Available in two basic styles and four panel thicknesses .047-.125 in. Material: Nylon. Finish: Matte.

TYPICAL APPLICATION

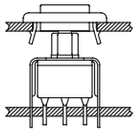

.047" (1,19) PANEL THK.	.062" (1,57) PANEL THK.	.090" (2,29) PANEL THK.	.125" (3,18) PANEL THK.
PART NO.	**PART NO.**	**PART NO.**	**PART NO.**
432502263	432602263	432702263	432802263 BLACK

PANEL MOUNTING

For part numbers
4325xxxxx, 4326xxxxx

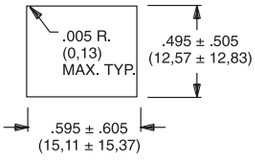

For part numbers
4327xxxxx, 4328xxxxx

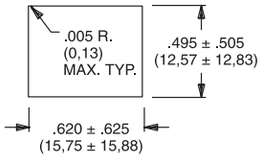

Panel Inserts

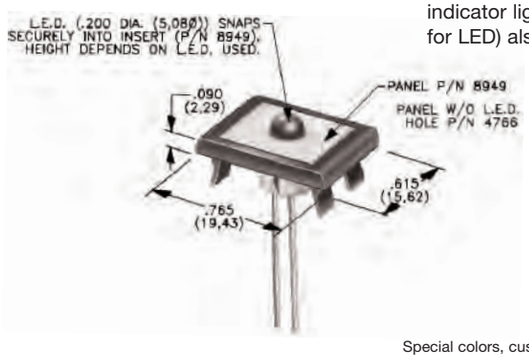

Above frames (part nos. 432XXXXXX) are also available with insert which accepts LED for indicator light assembly. Order insert separately from frame. Blank insert panel (without hole for LED) also available. **LED not included.**

PANEL INSERT WITH HOLE FOR LED	BLANK PANEL INSERT WITHOUT HOLE FOR LED
PART NO.	**PART NO.**
894902000	476602000 BLACK

Special colors, custom markings available, consult Customer Service Center.

LED INFORMATION

Process Information: Soldering to LED leads must be completed within 5 seconds at 500°F (260°C) maximum.
LEDs are not supplied with J82 option. LED snaps into switch frame surrounding actuator and is wired externally.

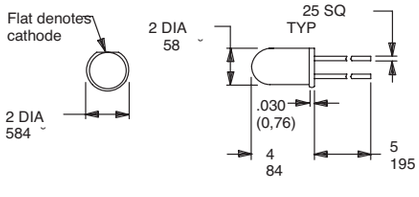

Suggested LED for J82 option
Dimensions for reference only

Third Angle Projection

Dimensions are shown: Inches (mm)
Specifications and dimensions subject to change

KM Series
Subminiature Pushbutton Switches

Features/Benefits

- ***Reliable contact design***
- ***Available with pretravel and overtravel***
- ***RoHS compliant***

Typical Applications

- ***Alarm systems***
- ***Computers***
- ***Detector switch application***

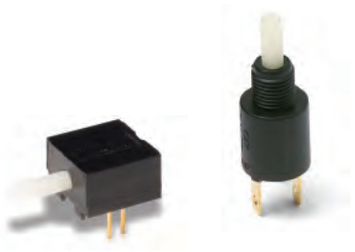

Models Available

Specifications

CONTACT RATING: Q contact material (KM11, KM12 Models): 0.25 AMPS @ 125 V AC or DC (UL); (KM33 Model): 1 AMP @ 125 V AC or 28 V DC. See page A-69 for additional ratings.

ELECTRICAL LIFE: 10,000 actuations min. at full load.

CONTACT RESISTANCE: Below 30 mΩ typ. initial @ 2-4 V DC, 100 mA, for both silver and gold plated contacts.

INSULATION RESISTANCE: $10^9\Omega$ min.

DIELECTRIC STRENGTH: 1,000 Vrms min. @ sea level.

OPERATING TEMPERATURE: –30°C to 85°C.

CAP INSTALLATION FORCE: 10 lbs. max. permissible.

NOTE: Any models supplied with Q or B contact material are RoHS compliant.

NOTE: Specifications and materials listed above are for switches with standard options. For information on specific and custom switches, consult Customer Service Center.

Materials

HOUSING & BUSHING: 6/6 nylon (UL94V-2), black.

ACTUATOR: 6/6 nylon (UL 94V-2), natural. Internal o-ring seal, available on KM11 & KM33 models.

MOVABLE CONTACT: B contact material: Bronze or copper, with gold plate over nickel plate. See page A-69 for additional contact materials.

STATIONARY CONTACTS & TERMINALS: B contact material: Copper, with gold plate over nickel plate. See page A-69 for additional contact materials.

RETURN SPRING: Music wire, phosphor coated.

MOUNTING NUT: Brass, nickel plated.

TERMINAL SEAL: Epoxy.

Build-A-Switch

To order, simply select desired option from each category and place in the appropriate box. Available options are shown and described on pages A-68 and A-70. For additional options not shown in catalog, consult Customer Service Center.

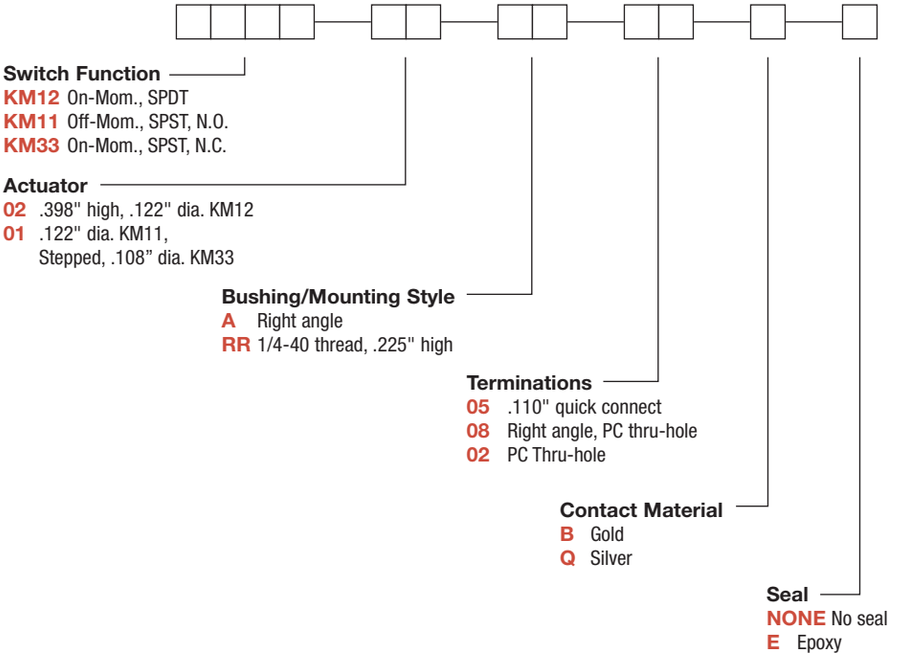

KM Series
Subminiature Pushbutton Switches

SWITCH FUNCTION

NO. POLES	MODEL NO.	SWITCH FUNCTION POS. 1	SWITCH FUNCTION POS. 2	CONNECTED TERMINALS POS. 1	CONNECTED TERMINALS POS. 2	SCHEMATIC
SP	KM11	OFF	MOM.	OPEN	2-1	SPST N.O.
	KM33	ON	MOM.	2-1	OPEN	SPST N.C.

SPST

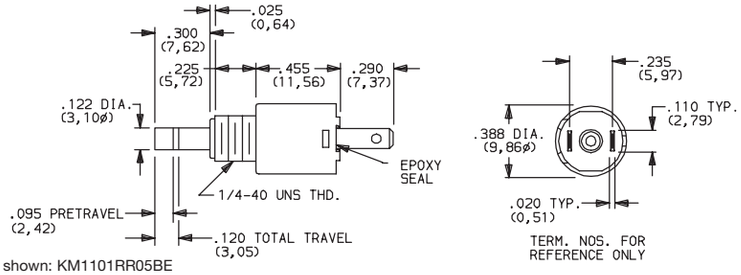

Part number shown: KM1101RR05BE

SP	KM12	ON	MOM.	2-1	4-3	SPDT

SPDT

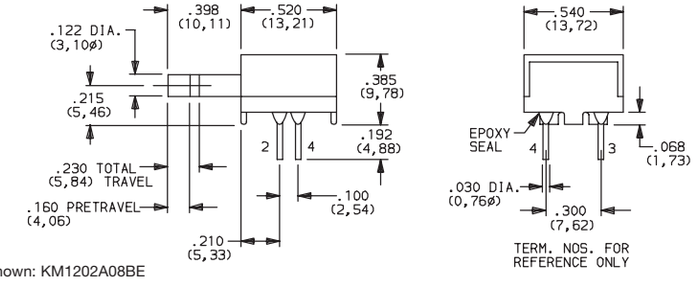

Part number shown: KM1202A08BE

ACTUATOR

02 .398" HIGH, .122" DIA.

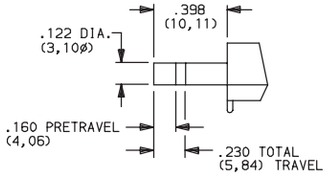

KM12 models only.

01 .122" DIA.

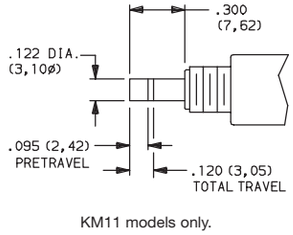

KM11 models only.

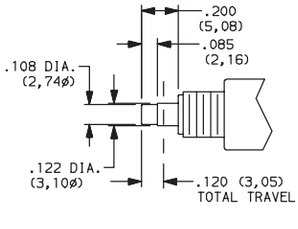

KM33 models only.

NOTE: Caps available for plunger options, see page A-70.

Third Angle Projection

Dimensions are shown: Inches (mm)
Specifications and dimensions subject to change

BUSHING/ MOUNTING STYLE

A RIGHT ANGLE

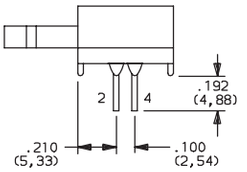

KM12 models only.

RR 1/4-40 THREAD, .225" HIGH

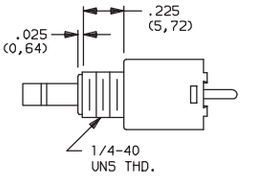

KM11 & KM33 models only.

PANEL MOUNTING

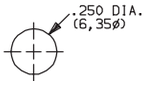

KM11 & KM33 models.

PC MOUNTING

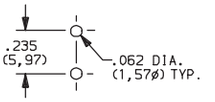

KM11 models only.

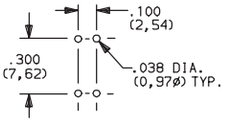

KM12 models only.

TERMINATIONS

05 .110" QUICK CONNECT

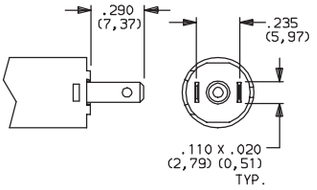

08 RIGHT ANGLE, PC THRU-HOLE

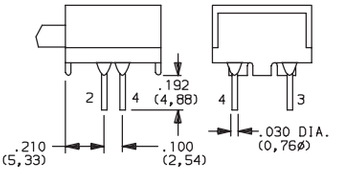

KM12 models only.

02 PC THRU-HOLE

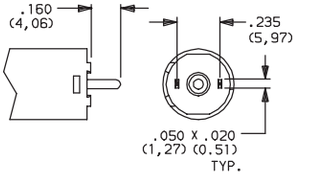

KM11 models only.

CONTACT MATERIAL

OPTION CODE	RoHS COMPLIANT *	RoHS COMPATIBLE *	CONTACT AND TERMINAL MATERIAL	RATINGS	
B	YES	YES	GOLD [1]	LOW LEVEL/DRY CIRCUIT	0.4 VA MAX. @ 20 V AC OR DC MAX.
Q	YES	YES	SILVER [2]	POWER	0.25 AMPS @ 125 V AC OR DC (KM11, KM12) (UL) 1 AMP @ 125 V AC OR 28 V DC (KM33).

* Note: See Technical Data section of this catalog for RoHS compliant and compatible definitions and specifications.

[1] STATIONARY CONTACTS & TERMINALS: Copper, with gold plate over nickel plate.
MOVABLE CONTACT: Phosphor bronze or beryllium copper, with gold plate over nickel plate.

[2] STATIONARY CONTACTS & TERMINALS: Copper, silver plated (standard with all termination options).
MOVABLE CONTACT: Phosphor bronze or beryllium copper, silver plated.

[3] STATIONARY CONTACTS & TERMINALS: Copper, with gold plate over nickel plate over silver plate.
MOVABLE CONTACT: Phosphor bronze or beryllium copper, with gold plate over nickel plate over silver plate.

NOTE: Any models supplied with Q or B contact material are RoHS compliant.

KM11, KM12 models ® when ordered with 'Q' contact material.

SEAL

NONE NO SEAL

E EPOXY SEAL

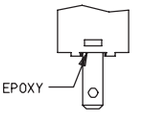

Third Angle Projection

Dimensions are shown: Inches (mm)
Specifications and dimensions subject to change

KM Series
Subminiature Pushbutton Switches

AVAILABLE HARDWARE

Cap, KM33 models

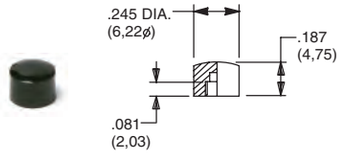

PART NO.

785101000 WHITE
785102000 BLACK
785103000 RED

Material: Nylon
Finish: Gloss

Cap, KM11 and KM12 models

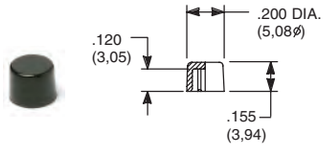

PART NO.

708901000 WHITE
708902000 BLACK
708903000 RED

Material: Nylon
Finish: Gloss

Cap, KM11 and KM12 models

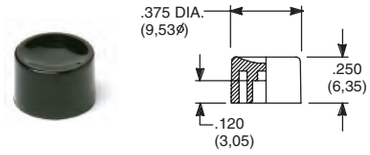

PART NO.

752701000 WHITE
752702000 BLACK
752703000 RED

Material: Nylon
Finish: Gloss

Cap, KM11 and KM12 models

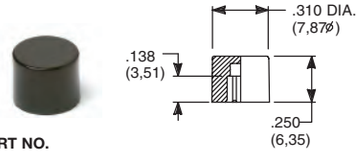

PART NO.

801801000 WHITE
801802000 BLACK
801803000 RED

Material: Nylon
Finish: Gloss

Cap, KM11 models

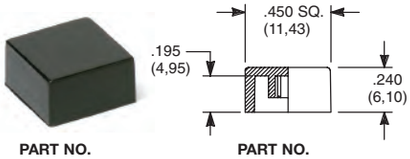

PART NO.

484601000 WHITE
484602000 BLACK
484603000 RED

Material: Nylon
Finish: Gloss

PART NO.

798201000 WHITE
798202263 BLACK
798203000 RED

Material: Nylon
Finish: Matte

NOTE: Other cap colors available, consult Customer Service Center.

Third Angle Projection

Dimensions are shown: Inches (mm)
Specifications and dimensions subject to change

8600 Series
Microminiature Pushbutton Switches

Features/Benefits

- ***Available with overtravel***
- ***Normally closed models available***
- ***Microminiature size ideal for applications where space is limited***
- ***RoHS compliant***

Typical Applications

- ***Detection***
- ***Telecommunications and networking equipment***
- ***Computers and peripherals***

Models Available

Specifications

CONTACT RATING: Q contact material (8631, 8632 Models): 500 mA @ 120 V AC or 28 V DC; 250 mA @ 250 V AC; (8633 Model): 250 mA @ 120 V AC or 28 V DC; 125 mA @ 250 V AC. See page A-73 for additional ratings.

ELECTRICAL LIFE:
8631 and 8633 MODELS: 250,000 actuations at full load.
8632 MODEL: 100,000 actuations at full load.

CONTACT RESISTANCE: Below 30 mΩ typ. initial @ 2-4 V DC, 100 mA, for both silver and gold plated contacts.

INSULATION RESISTANCE: 109 Ω min.

DIELECTRIC STRENGTH: 500 Vrms min. @ sea level.

OPERATING TEMPERATURE: –30°C to 65°C.

SOLDERABILITY: Per MIL-STD-202F method 208D, or EIA RS-186E method 9.

Materials

CASE: Glass filled phenolic or diallyl phthalate (DAP), (UL94V-0).

PLUNGER: Glass filled nylon (UL94V-0), black standard.

BUSHING: Brass, nickel plated.

CONTACTS: Q contact material: Coin silver, silver plated. See page A-73 for additional contact materials.

TERMINALS:
8631, 8632 MODELS: Copper alloy, silver plated.
8633 MODEL: Q contact material: Coin silver.
See page A-73 for additional contact materials.

TERMINAL SEAL:
8633 MODEL: Epoxy.
8631, 8632 MODELS: Terminals insert molded.

HARDWARE: Nut: Brass, nickel plated.

NOTE: Any models supplied with Q, B or G contact material are RoHS compliant.

NOTE: Specifications and materials listed above are for switches with standard options. For information on specific and custom switches, consult Customer Service Center.

Build-A-Switch

To order, simply select desired option from each category and place in the appropriate box. Available options are shown and described on pages A-72 and A-73. For additional options not shown in catalog, consult Customer Service Center.

Switch Function
8631 SPST Off-Mom.
8632 SPST Off-Mom.
8633 SPST On-Mom.

Termination
Z Solder lug
C PC Thru-hole

Contact Material
B Gold
Q Silver
G Gold over silver

Seal
D No epoxy
E Epoxy

Plunger Color
2 Black
3 Red

8600 Series
Microminiature Pushbutton Switches

SWITCH FUNCTION

NO. POLES	MODEL NO.	SWITCH FUNCTION POS. 1	SWITCH FUNCTION POS. 2	TOTAL TRAVEL	ACTUATION FORCE	SCHEMATIC
SP	8631	OFF	MOM.	.040 (1,02) TYP.	5 oz (140g) TYP.	N.O.

SPST

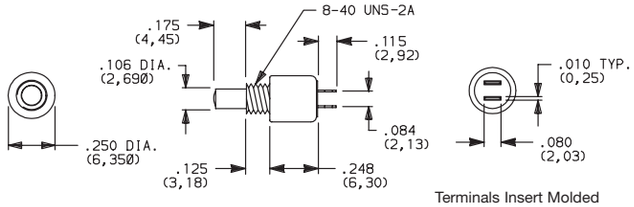

PANEL MOUNTING

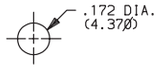

Part number shown: 8631ZQD2

Terminals Insert Molded

NO. POLES	MODEL NO.	SWITCH FUNCTION POS. 1	SWITCH FUNCTION POS. 2	TOTAL TRAVEL	ACTUATION FORCE	SCHEMATIC
SP	8632	OFF	MOM.	.106 (2,69) TYP. with overtravel .024 (0,61) TYP.	6.25 oz (177g) TYP.	N.O. with overtravel

SPST

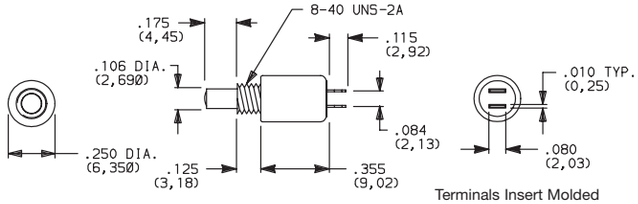

PANEL MOUNTING

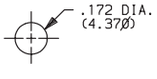

Part number shown: 8632ZQD2

Terminals Insert Molded

NO. POLES	MODEL NO.	SWITCH FUNCTION POS. 1	SWITCH FUNCTION POS. 2	TOTAL TRAVEL	ACTUATION FORCE	SCHEMATIC
SP	8633	ON	MOM.	.048 (1,22) TYP.	5 oz (140g) TYP.	N.C.

SPST

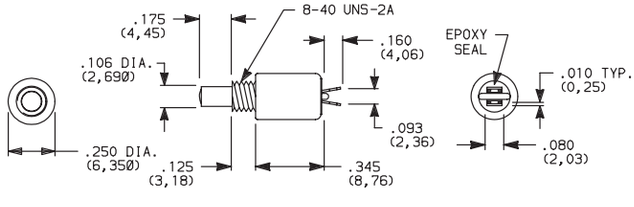

PANEL MOUNTING

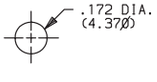

Part number shown: 8633ZQE2

MOM. = Momentary

NOTE: Caps available for plunger options, see page A-73.

TERMINATIONS

Z SOLDER LUG

8631, 8632 models only.

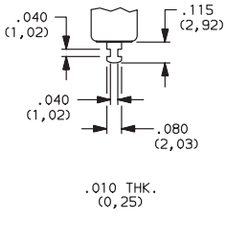

8633 models only.

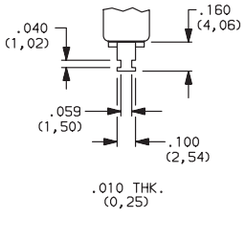

C PC THRU-HOLE

8631, 8632 models only.

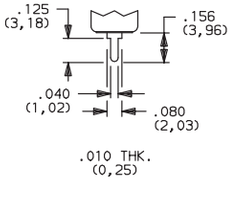

PC MOUNTING

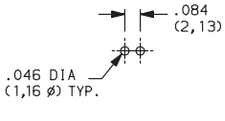

Third Angle Projection

Dimensions are shown: Inches (mm)
Specifications and dimensions subject to change

CONTACT MATERIAL

OPTION CODE	RoHS COMPLIANT *	RoHS COMPATIBLE *	CONTACT MATERIAL	TERMINAL PLATING	RATINGS	
B	YES	YES	GOLD [1]	GOLD [1]	LOW LEVEL/ DRY CIRCUIT	0.4 VA MAX. @ 20 V AC OR DC MAX.
Q	YES	YES	SILVER [4]	SILVER [5]	POWER	8631, 8632 MODELS: 500 mA @ 120 V AC OR 28 V DC; 250 mA @ 250 V AC. 8633 MODELS: 250 mA @ 120 V AC OR 28 V DC; 125 mA @ 250 V AC.
G	YES	YES	GOLD OVER SILVER [4]	GOLD [3]	LOW LEVEL/DRY CIRCUIT OR POWER	0.4 VA MAX @ 20 V AC OR DC MAX. OR 8631, 8632 MODELS: 500 mA @ 120 V AC OR 28 V DC; 250 mA @ 250 V AC. 8633 MODELS: 250 mA @ 120 V AC OR 28 V DC; 125 mA @ 250 V AC.

* Note: See Technical Data section of this catalog for RoHS compliant and compatible definitions and specifications.

[1] CONTACTS & TERMINALS: Copper alloy, with gold plate over nickel plate.
[2] CONTACTS: Coin silver, with gold plate over nickel plate.
[3] TERMINALS: Copper alloy, with gold plate over nickel plate.
8633 model only: Coin silver, with gold plate over nickel plate.
[4] CONTACTS: Coin silver, silver plated.
[5] TERMINALS: Copper alloy, silver plated. 8633 model only: coin silver.

NOTE: Any models supplied with Q, B or G contact material are RoHS compliant.

8631, 8632 models ® with all options when ordered with G or Q contact material.
Q contact material standard with C, Z terminations.

SEAL

D NO EPOXY SEAL

Not available on 8633 model.
Standard on 8631, 8632 models.

E EPOXY SEAL

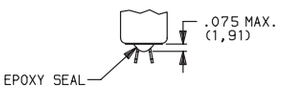

Not available on 8631, 8632 models.
Standard on 8633 model only.

PLUNGER COLOR

OPTION CODE	COLOR
2	BLACK
3	RED

AVAILABLE HARDWARE

Cap

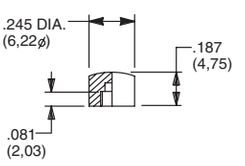

PART NO.

785101000 WHITE
785102000 BLACK
785103000 RED

Material: Nylon
Finish: Gloss

NOTE: Other cap colors available, consult Customer Service Center.

Third Angle Projection

Dimensions are shown: Inches (mm)
Specifications and dimensions subject to change

8700 Series
Overtravel Pushbutton Switches

Features/Benefits

- ***Extended pre-travel or over-travel***
- ***Heavy-duty brass plunger***
- ***Long electrical life — 100K cycles***
- ***RoHS compliant***

Typical Applications

- ***Telecommunications***
- ***High end Instrumentation***
- ***Medical & test equipment***
- ***Detection***

Specifications

CONTACT RATING: Q contact material: 1 AMP @ 120 V AC or 28 V DC. See page A-76 for additional ratings.

ELECTRICAL LIFE: 100,000 actuations at full load.

CONTACT RESISTANCE: Below 30 mΩ typ. Initial @ 2-4 V DC, 100 mA.

INSULATION RESISTANCE: $10^3\Omega$ min.

DIELECTRIC STRENGTH: 1,000 Vrms min. @ sea level.

OPERATING TEMPERATURE: –30°C to 65°C.

NOTE: Any models supplied with Q, or B contact material are RoHS compliant.

NOTE: Specifications and materials listed above are for switches with standard options. For information on specific and custom switches, consult Customer Service Center.

Materials

CASE: Diallyl phthalate (DAP) (UL 94V-0).

PLUNGER:
8731 – .390" brass, nickel plated.
8732 – .390" PBT polyester, black.

BUSHING: brass, nickel plated.

CONTACTS: Q contact material: Coin silver, silver plated. See page A-76 for additional contact materials.

TERMINALS: Q contact material: Copper alloy, silver plated. See page A-76 for additional contact materials.

TERMINAL SEAL: Epoxy.

HARDWARE: Nut: Brass, nickel plated; lockwasher: Steel, bright nickel plate. One mounting nut & lockwasher supplied with all switches.

Build-A-Switch

To order, simply select desired option from each category and place in the appropriate box. Available options are shown and described on pages A-75 and A-76. For additional options not shown in catalog, consult Customer Service Center. All models have epoxy terminal seal and are compatible with all “bottom-wash” PCB cleaning methods.

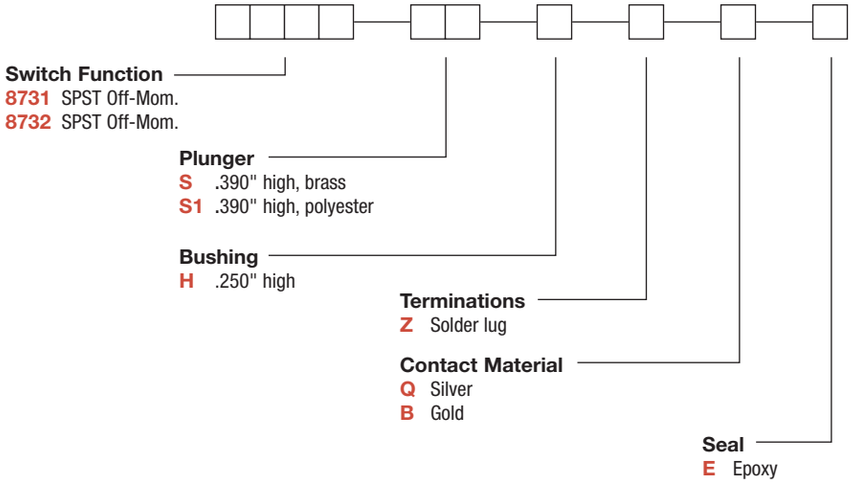

SWITCH FUNCTION

NO. POLES	MODEL NO.	SWITCH FUNCTION POS. 1	SWITCH FUNCTION POS. 2	TOTAL TRAVEL		ACTUATION FORCE	SCHEMATIC
SP	8731	OFF	MOM.	.390 (9,91) TYP.	with overtravel .311 TYP.	4.7 oz TYP.	N.O. with overtravel SPST

SPST

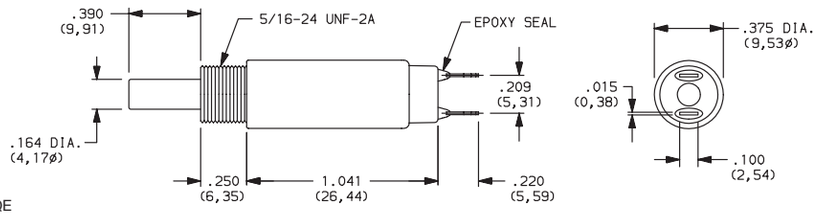

Part number shown: 8731SHZQE

SP	8732	OFF	MOM.	.390 (9,91) TYP.	with overtravel .350 TYP.	2.2 oz TYP.	N.O. with overtravel SPST

SPST

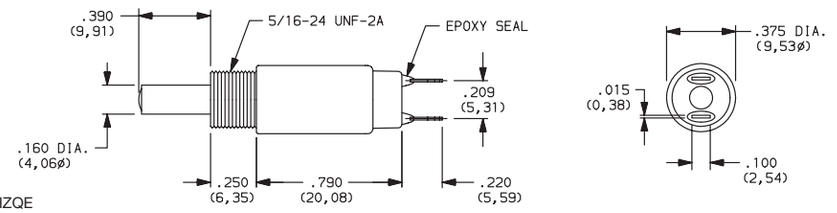

Part number shown: 8732S1HZQE

MOM. = Momentary

PLUNGER

S .390" HIGH, BRASS

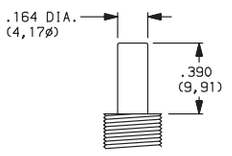

Available with 8731 model only.

S1 .390" HIGH, PBT POLYESTER

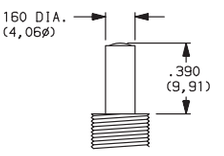

Available with 8732 model only.

BUSHING

H .250" HIGH

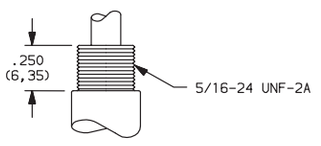

PANEL MOUNTING

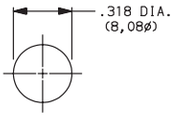

Third Angle Projection

Dimensions are shown: Inches (mm)
Specifications and dimensions subject to change

8700 Series
Overtravel Pushbutton Switches

TERMINATIONS

Z SOLDER LUG

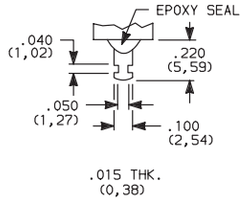

CONTACT MATERIAL

OPTION CODE	RoHS COMPLIANT *	RoHS COMPATIBLE *	CONTACT MATERIAL	TERMINAL PLATING	RATINGS	
Q	YES	YES	SILVER	SILVER	POWER	1 AMP @ 125 V AC OR 28 V DC.
B	YES	YES	GOLD	GOLD	LOW LEVEL/DRY CIRCUIT	0.4 VA MAX. @ 20 V AC OR DC MAX.

* Note: See Technical Data section of this catalog for RoHS compliant and compatible definition and specifications.

NOTE: Any models supplied with Q, or B contact material are RoHS compliant.

SEAL

E EPOXY SEAL

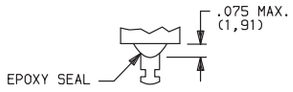

Third Angle Projection

Dimensions are shown: Inches (mm)
Specifications and dimensions subject to change

GP Series
Sealed Ultraminiature Pushbutton Switches

Features/Benefits

- ***Ultraminiature design saves space***
- ***Process compatible, withstands most soldering and washing processes***
- ***Thru-hole and surface mount models available***
- ***Sealed construction—internal o-ring and epoxy base***
- ***RoHS compliant***

Typical Applications

- ***Telecommunications and network equipment***
- ***Computers and peripheral products***
- ***Instrumentation***
- ***Medical Applications***

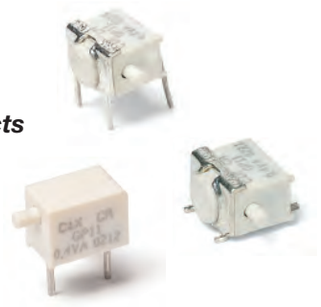

Specifications

CONTACT RATING: 0.4 VA max. @ 20 V AC or DC max.

MECHANICAL & ELECTRICAL LIFE: 40,000 make-and-break cycles at full load.

CONTACT RESISTANCE: Below 50 mΩ typ. initial @ 2-4 V DC, 100 mA.

INSULATION RESISTANCE: $10^9\Omega$ min.

DIELECTRIC STRENGTH: 500 Vrms min. @ sea level.

OPERATING TEMPERATURE: –40°C to 85°C.

SOLDERABILITY: Per MIL-STD-202F method 208D, or EIA RS-186E method 9 (1 hour steam aging).

DEGREE OF PROTECTION: IP57; Protection against harmful dust deposit, full-scale voltage protection, temporary immersion.

PACKAGING: Surface mount switches standard in anti-static tape and reel packaging per EIA 481-3, see page A-80 for drawings and reel information. Thru-Hole parts are shipped in trays.

All models are RoHS compliant and compliant.

Materials

HOUSING & BASE: Glass filled nylon 4/6, flame retardant, heat stabilized (UL 94V-0).

ACTUATOR: Glass filled nylon 4/6, flame retardant (UL 94V-0) with standard internal o-ring seal.

SWITCH SUPPORT: Brass, tin plated.

MOVABLE CONTACT: Copper alloy, with gold plate over nickel plate.

STATIONARY CONTACTS Copper alloy, with gold plate over nickel plate.

TERMINALS: Copper alloy, with gold flash over nickel plate.

TERMINAL SEAL: Epoxy/Urethane. All terminals insert molded.

NOTE: Any models supplied with B contact material are RoHS compliant and compatible.

NOTE: Materials listed above are general specifications. Specifications available for specific and custom switches, consult Customer Service Center.

CAUTION: PC mounting layouts and pads as shown are designed to be compatible with the latest equipment and reflow techniques. Care should be taken in the design and location of PC lands to suit individual needs. Orientation relative to reflow direction may significantly impact solder joint integrity.

How To Order

Complete part numbers for GP Series Sealed Ultraminiature Pushbutton Switches are shown on pages A-78 thru A-80.

PART NUMBER	SWITCH FUNCTION POS.1	SWITCH FUNCTION POS. 2	SCHEMATIC
GP11MCBE	OFF	MOM.	1 3 SPST
Conn. Terms.	OPEN	1-3	
GP12MCBE	ON	MOM.	2 (COMM) NC 1 3 NO SPDT
Conn. Terms.	2-1	2-3	

MOM. = Momentary

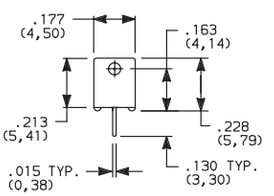

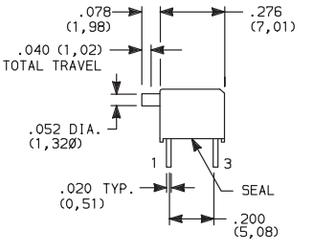

Terminal nos. for reference only.

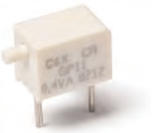

GP11MCBE
SPST

PC MOUNTING

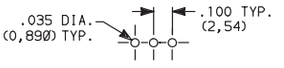

GP11– omit center hole.

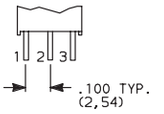

GP12 Model

Dimensions are shown: Inches (mm)
Specifications and dimensions subject to change

GP Series
Sealed Ultraminiature Pushbutton Switches

GP11MABE
SPST

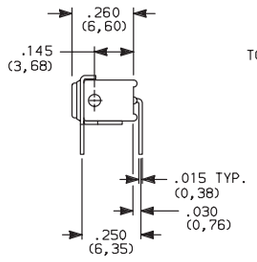

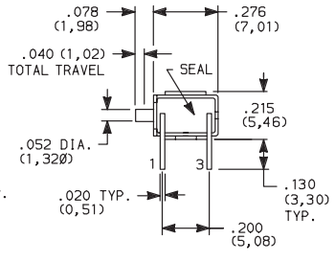

Terminal nos.
for reference only.

PC MOUNTING

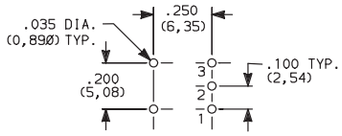

GP11– omit hole 2.

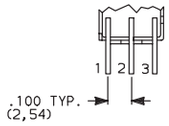

GP12 Model

PART NUMBER	SWITCH FUNCTION POS.1	SWITCH FUNCTION POS. 2	SCHEMATIC
GP11MABE	OFF	MOM.	SPST
Conn. Terms.	OPEN	1-3	
GP12MABE	ON	MOM.	SPDT
Conn. Terms.	2-1	2-3	

MOM. = Momentary

GP11MSABE
SPST

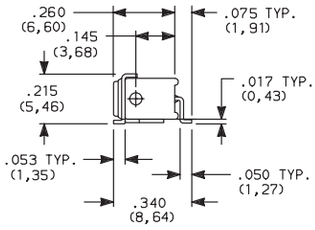

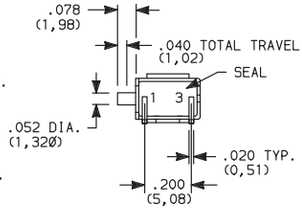

Terminal nos.
for reference only.

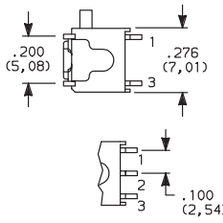

GP12 Model

PC MOUNTING

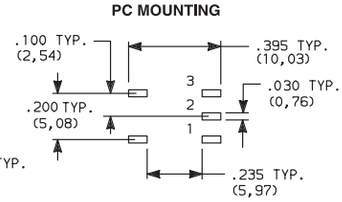

GP11– omit pad 2.

PART NUMBER	SWITCH FUNCTION POS.1	SWITCH FUNCTION POS. 2	SCHEMATIC
GP11MSABE	OFF	MOM.	SPST
Conn. Terms.	OPEN	1-3	
GP12MSABE	ON	MOM.	SPDT
Conn. Terms.	2-1	2-3	

MOM. = Momentary

GP11MSA1BE
SPST

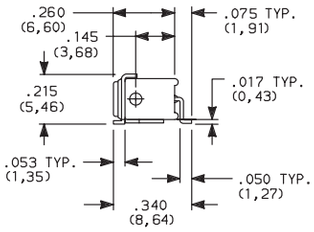

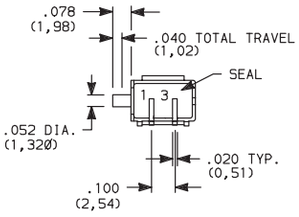

Terminal nos.
for reference only.

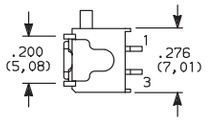

PC MOUNTING

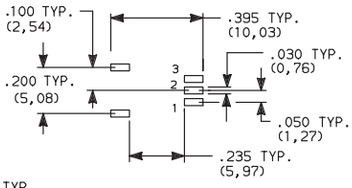

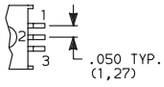

GP12 Model

GP11– omit pad 2.

PART NUMBER	SWITCH FUNCTION POS.1	SWITCH FUNCTION POS. 2	SCHEMATIC
GP11MSA1BE	OFF	MOM.	SPST
Conn. Terms.	OPEN	1-3	
GP12MSA1BE	ON	MOM.	SPDT
Conn. Terms.	2-1	2-3	

MOM. = Momentary

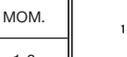

Third Angle
Projection

Dimensions are shown: Inches (mm)
Specifications and dimensions subject to change

PART NUMBER	SWITCH FUNCTION POS.1	SWITCH FUNCTION POS. 2	SCHEMATIC
GP12MSCBE	ON	MOM.	2 (COMM) NC 1 3 NO SPDT
Conn. Terms.	2-1	2-3	

MOM. = Momentary

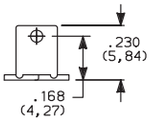

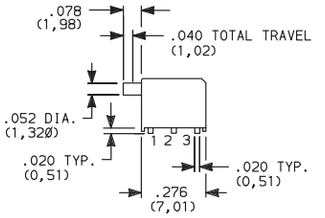

Terminal nos.
for reference only.

GP12MSCBE
SPDT

PC MOUNTING

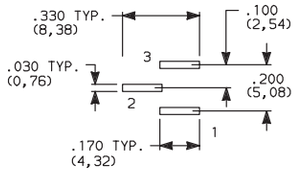

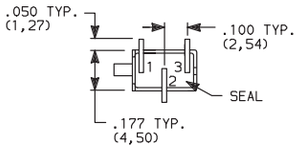

NOTE: Recommended for infrequent use applications only
For increased switch mounting strength, order, SV1 termination style with support bracket (see below).

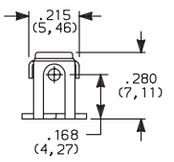

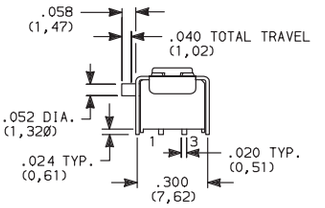

GP11MSV1BE
SPST

PART NUMBER	SWITCH FUNCTION POS.1	SWITCH FUNCTION POS. 2	SCHEMATIC
GP11MSV1BE	OFF	MOM.	1 3 SPST
Conn. Terms.	OPEN	1-3	
GP12MSV1BE	ON	MOM.	2 (COMM) NC 1 3 NO SPDT
Conn. Terms.	2-1	2-3	

MOM. = Momentary

PC MOUNTING
GP11 MODELS

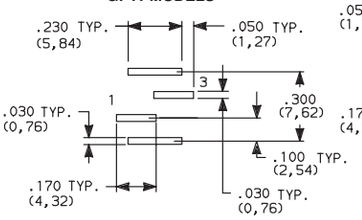

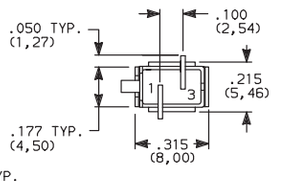

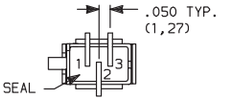

GP12 Model

Terminal nos.
for reference only.

PC MOUNTING
GP12 Models

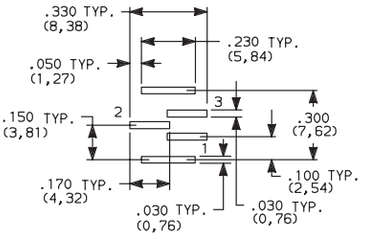

Third Angle
Projection

Dimensions are shown: Inches (mm)
Specifications and dimensions subject to change

GP Series
Sealed Ultraminiature Pushbutton Switches

TAPE & REEL

For part numbers GP11MSV1BE, GP12MSV1BE

REEL INFORMATION	
OUTSIDE DIAMETER	13.00 (330,0)
PILOT HOLE	.512 (13,0)
QUANTITY PER REEL	600

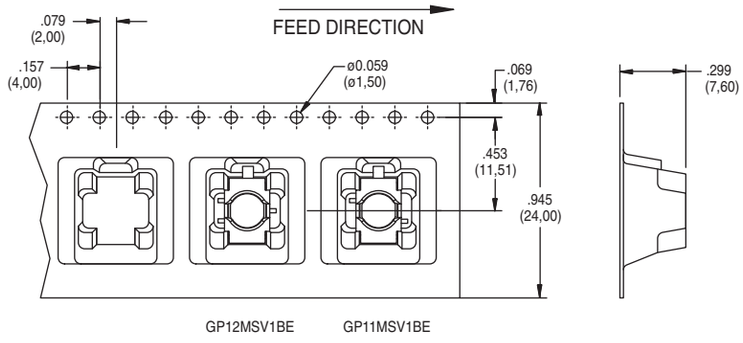

For part numbers GPXXSA1BE, GPXXMSABE

REEL INFORMATION	
OUTSIDE DIAMETER	13.00 (330,0)
PILOT HOLE	.512 (13,0)
QUANTITY PER REEL	600

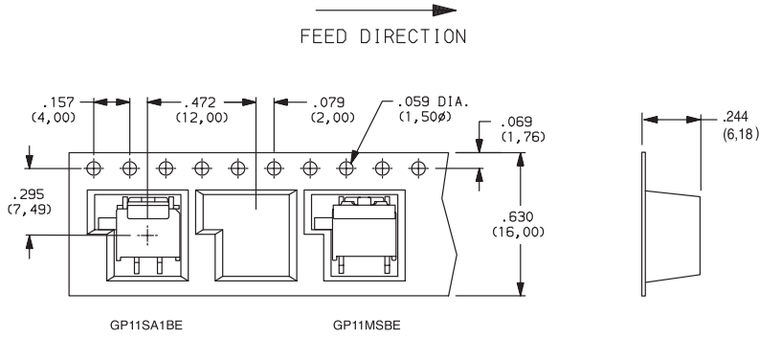

For part numbers GP12MSCBE

REEL INFORMATION	
OUTSIDE DIAMETER	13.00 (330,0)
PILOT HOLE	.512 (13,0)
QUANTITY PER REEL	600

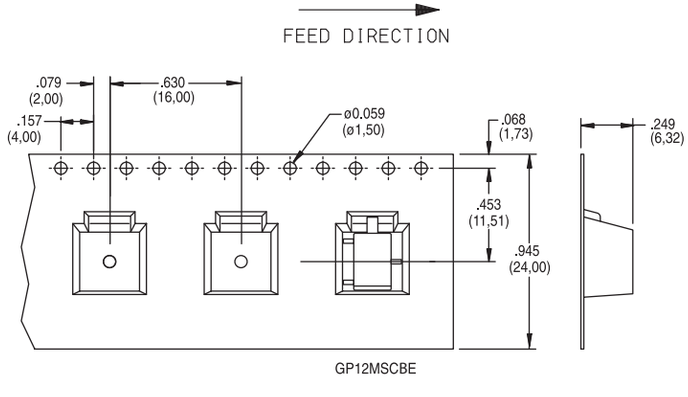

Third Angle Projection

Dimensions are shown: Inches (mm)
Specifications and dimensions subject to change

PN Series
Alternate & Momentary Action Pushbutton Switches

Features/Benefits

- ***Momentary or locking action***
- ***Different actuation forces for customized feel***
- ***Low cost, reliable contact design***
- ***Single and double pole options***
- ***RoHS compliant***

Typical Applications

- ***Computers and peripherals***
- ***Instrumentation and measurement equipment***
- ***Non-power, on-off switch applications***

Specifications

CONTACT RATING: 0.2 AMP @ 30 V DC max.
ELECTRICAL LIFE: 10,000 make-and-break cycles at full load.
MECHANICAL LIFE: 10,000 on/off cycles.
CONTACT RESISTANCE: 30 mΩ max. initial
INSULATION RESISTANCE: 100 MΩ min.
DIELECTRIC STRENGTH: 500 V AC min.
OPERATING/STORAGE TEMPERATURES: –10°C to 60°C.
PACKAGING: Switches are supplied in anti-static trays.

Materials

FRAME: Tin plated steel.
ACTUATOR: PA 66 black.
BASE: Phenolic resin.
TERMINALS: Silver plated brass.
MOVABLE CONTACTS: Silver plated phosphor bronze.
RETURN SPRING: SWC
DETENT SPRING: Phosphor bronze.
DETENT SPRING PLATE: Phosphor bronze.
RETURN SPRING RETAINER RING: Nickel plated steel.
TERMINAL SEAL: Epoxy.

Build-A-Switch

To order, simply select desired option from each category and place in the appropriate box. For additional options not shown in catalog, consult Customer Service Center.

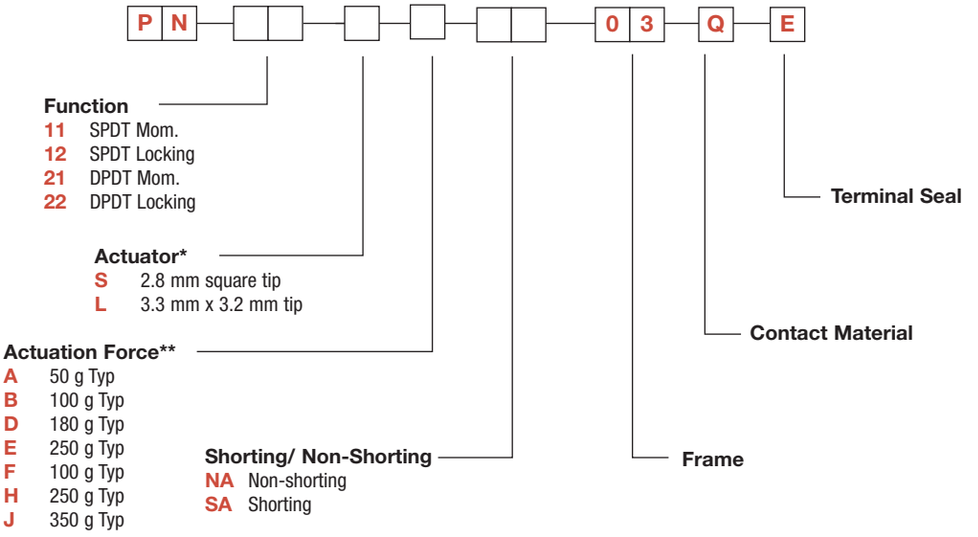

* Note - The switch body style dimenions differ for each of these 3 groupings

"S" actuator available for PN 11 & PN 12 options

"S" actuator available for PN 21 & PN 22 options

"L" actuator available for PN 21 & PN 22 options

** Actuation Force "A" only available with PN11 with "S" actuator

PN 11 & PN 21 available with Acuation Force "B", "D", "E", "F", "H", "J"

PN 12 & PN 22 available with Actuation Force "D", "E", "H", "J"

Full travel

PN Series
Alternate & Momentary Action Pushbutton Switches

PN 11 SPDT Mom.
PN 12 SPDT Locking

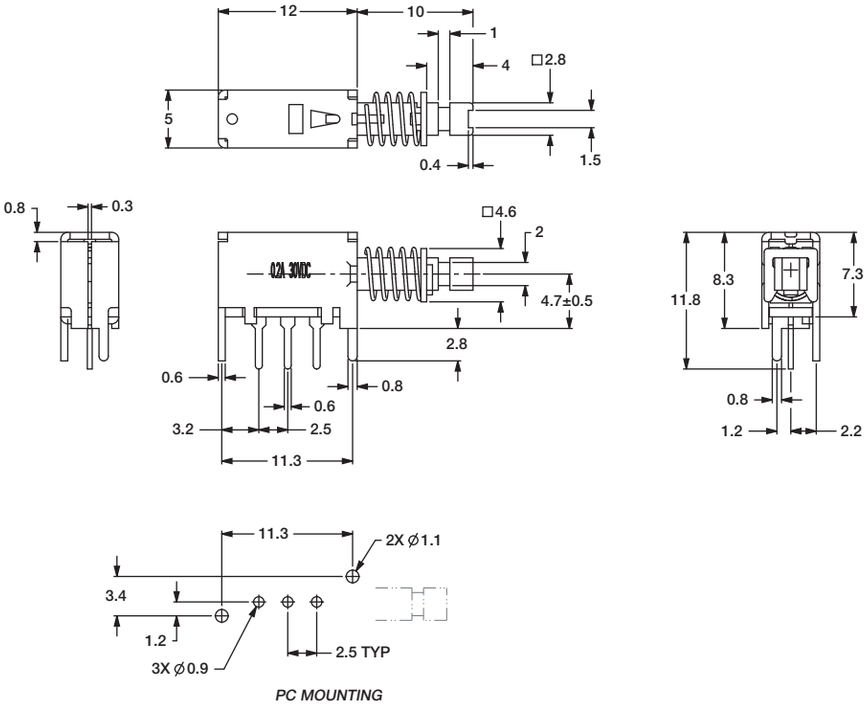

PC MOUNTING

PN 21 DPDT Mom. with "S" Actuator
PN 22 DPDT Locking with "S" Actuator

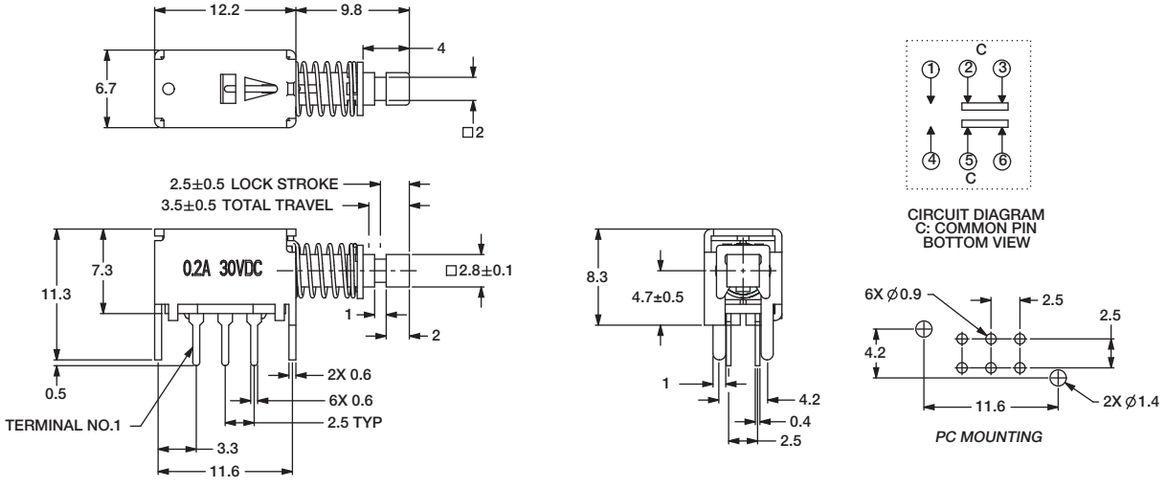

PC MOUNTING

Third Angle Projection

Dimensions are shown: mm
Specifications and dimensions subject to change

PN 21 DPDT Mom. with "L" Actuator
PN 22 DPDT Locking with "L" Actuator

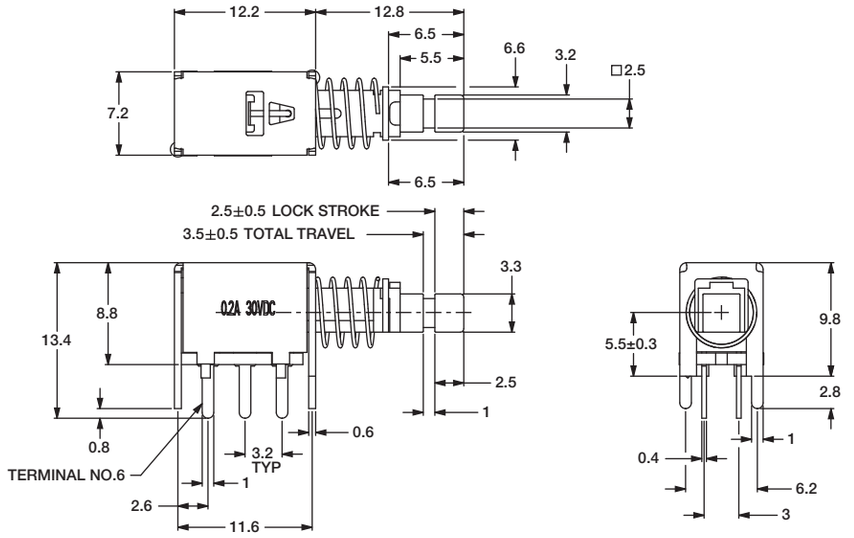

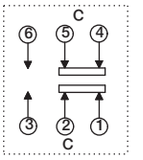

CIRCUIT DIAGRAM
C: COMMON PIN
BOTTOM VIEW

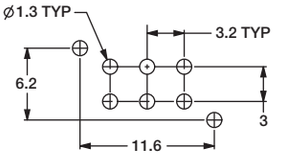

PC MOUNTING

BUTTONS MUST BE ORDERED SEPARATELY. SHIPPED IN BULK.

PE

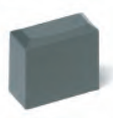

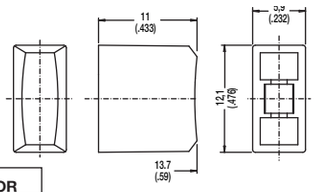

OPTION CODE	COLOR
RD	Red
GY	Gray
BK	Black
WH	White

PE and PV buttons fit "L" actuators

PV

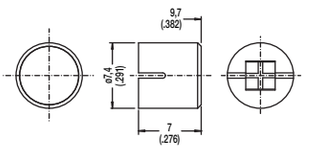

Indexed

G001A Black
G001G Gray
G001I Ivory
G001R Red

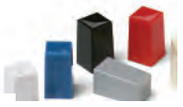

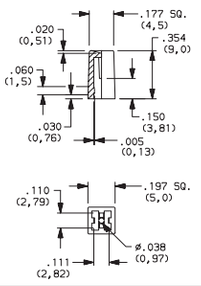

Rectangular

G002A Black
G002G Gray
G002I Ivory
G002R Red

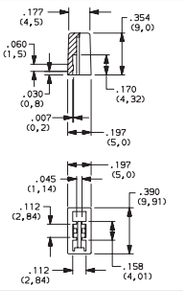

Round

G003A Black
G003G Gray
G003I Ivory
G003R Red

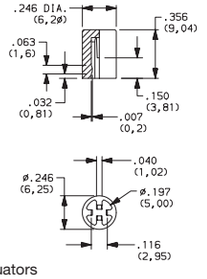

G001, G002, G003 and G004 buttons fit "S" actuators

Square

G004A Black
G004G Gray
G004I Ivory
G004R Red

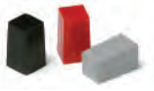

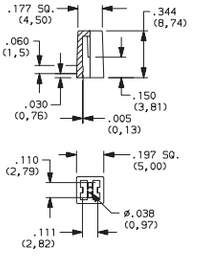

Third Angle Projection

Dimensions are shown: Inches (mm)
Specifications and dimensions subject to change

PHB Series
Short Stroke Pushbutton Switches

Features/Benefits

- ***Momentary or latching action***
- ***Low cost, reliable contact design***
- ***2 & 4 pole configurations***
- ***Sealed contacts***
- ***Optional buttons***
- ***RoHS compliant***

Typical Applications

- ***Computers and peripherals***
- ***Instrumentation and measurement equipment***
- ***Non-power, on-off switch applications***

Specifications

RATING: 1 A @ 15 V DC

DIELECTRIC STRENGTH (50 Hz/1 min.): 500 V DC between terminals or between terminals and frame for 1 minute

OPERATING LIFE: 10,000 cycles at rated load

CONTACT RESISTANCE: 20 m Ωohms initial

INSULATION RESISTANCE: 100 M Ωohms

TOTAL TRAVEL/LATCHING TRAVEL: 2.5mm (± 0.5 mm) / 1.5mm (± 0.5 mm) to latch EE option (push-push)

OPERATING FORCE:
2U option: 170 grams ± 100 grams (1.67 ± 0.98N)
4U option: 230 grams ± 100 grams (2.26 ± 0.98N)

OPERATING TEMPERATURE: -10˚C to 60˚C

BOUNCE TIME: ≤10 ms

SEALING: Sealed contacts.

PACKAGING: Switches; PHB2 models: 84 pcs per tray; PHB4 models 72 pcs per tray
Optional Caps; Bulk bag - 100 caps per bag

Materials

FIXED TERMINAL: Brass, silver plated

MOVABLE CONTACT: Phosphor bronze, silver plated

COVER: PA 66 Black

COVER TO BASE RETAINING CLIP: POM

ACTUATOR: POM

RETURN SPRING: Stainless steel

SPRING RETAINING RING: Steel, nickel plate

BASE: Phenolic resin

TERMINAL SEAL: Epoxy.

NOTE: Specifications and materials listed above are for switches with standard options. For information on specific and custom switches, consult Customer Service Center.

Build-A-Switch

To order, simply select desired option from each category and place in the appropriate box. For additional options not shown in catalog, consult Customer Service Center.

Switch

P H B — [ ][ ] — [ ][ ] — [ ][ ] — 1 A

Contact Arrangement
2U 2 Changeovers
4U 4 Changeovers

Mechanical Function
OA Momentary
EE Push-push

Termination
TS Straight
SN Kinked (plug in)

Electrical Rating
1A 1 Amp / 15 VDC

Caps (order separately)

[ ][ ][ ][ ][ ]

INDEXED	COLOR
G001A	BLACK
G001G	GRAY
G0011	IVORY
G001R	RED

RECTANGULAR	COLOR
G002A	BLACK
G002G	GRAY
G0021	IVORY
G002R	RED

ROUND	COLOR
G003A	BLACK
G003G	GRAY
G0031	IVORY
G003R	RED

SQUARE	COLOR
G004A	BLACK
G004G	GRAY
G0041	IVORY
G004R	RED

Dimensions are shown: Inches (mm)
Specifications and dimensions subject to change

TERMINATION

TS STRAIGHT

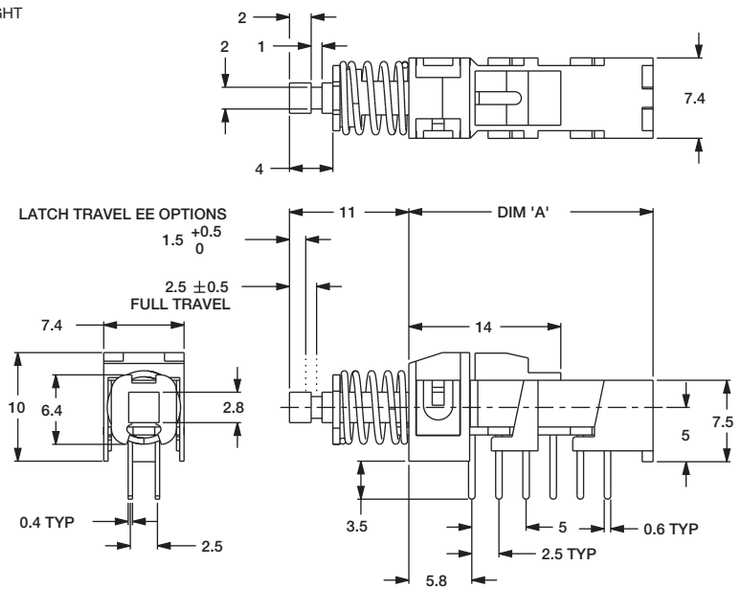

POLES	MODEL NO.	DIM 'A'	ACTION
4	PHB4UEE1A	22,5	PUSH/PUSH
	PHB4U0A1A	22,5	MOMENTARY
2	PHB2UEE1A	15,0	PUSH/PUSH
	PHB2U0A1A	15,0	MOMENTARY

SN KINKED (PLUG IN)

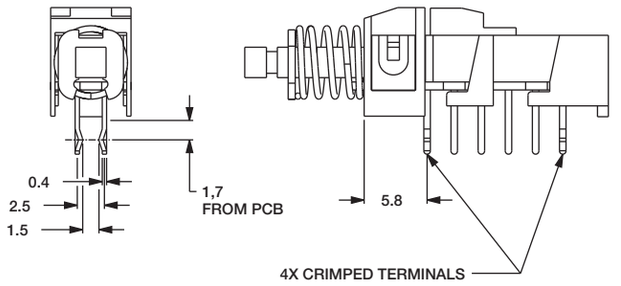

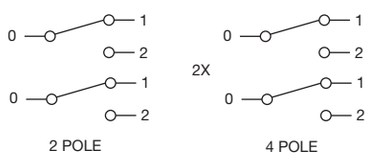

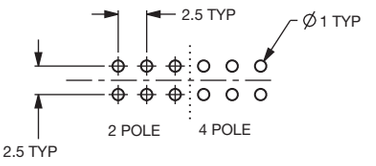

Third Angle Projection

Dimensions are shown: mm
Specifications and dimensions subject to change

PHB Series
Short Stroke Pushbutton Switches

CAPS

Indexed

G001A Black
G001G Gray
G001I Ivory
G001R Red

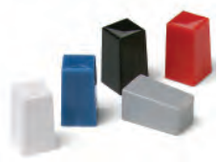

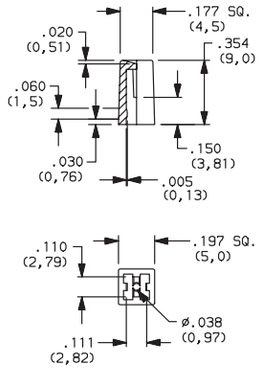

Rectangular

G002A Black
G002G Gray
G002I Ivory
G002R Red

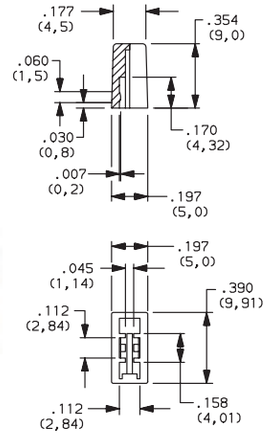

Round

G003A Black
G003G Gray
G003I Ivory
G003R Red

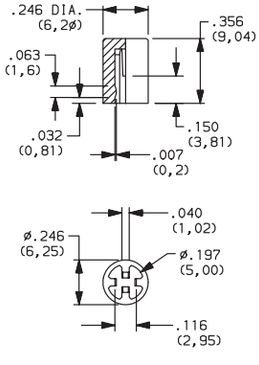

Square

G004A Black
G004G Gray
G004I Ivory
G004R Red

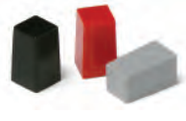

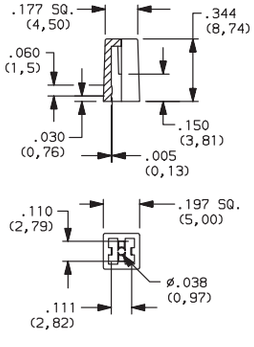

Third Angle Projection

Dimensions are shown: Inches (mm)
Specifications and dimensions subject to change

Features/Benefits

- *Up to 10 poles per module*
- *Various contact terminals*
- *Various mounting & switch ganging configurations*
- *Mechanical indicator buttons*
- *RoHS compliant*

Typical Applications

- *Audio selection*
- *Digital equipment interface*
- *Medical equipment interface*

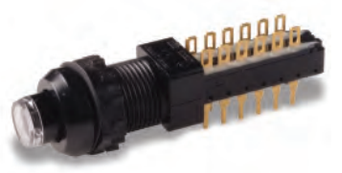

Specifications

SWITCHING POWER: F module max. AC/DC: Silver: 50 VA/15W, Gold: 1 VA/300 mW.

SWITCHING VOLTAGE: F module max. AC/DC: Silver: 125/30V, Gold: 50/30 V.

SWITCHING CURRENT: F module max. AC/DC: Silver: 0.5A/0.5A, Gold: 0.04A/0.01A.

CARRYING CURRENT: Max at du = 20C: Silver: < 2A, Gold: <0.5A.

DIELECTRIC STRENGTH (50 Hz, 1 min.): Chassis/contact: ^1500V Between contacts: ^1500V.

OPERATING LIFE "OA/EE" (24V/200mA): >10^5 operations "GR": >3.5 x 104 operations.

CONTACT RESISTANCE: Initial: Typical %10 mΩ, max. 20 mΩ After operating life: %100 mΩ

INSULATION RESISTANCE: ^10^9 Ω between open contacts, ^10^9 Ω between chassis and contacts.

CAPACITANCE (at f = 10 kHz): %0.7 pF between 2 contacts.

TOTAL TRAVEL/LATCHING TRAVEL: 4.7mm/3.3mm (.185 inch/ .130 inch).

All models and options are RoHS compliant and compatible.

NOTE: All models and options are RoHS compliant and compatible.

NOTE: Specifications and materials listed above are for switches with standard options. For information on specific and custom switches, consult Customer Service Center.

TYPICAL F OPERATING FORCE: 2U: 6.5N (650 grams); 4U: 6.5N (650 grams); 6U: 7.5N (750 grams); 8U: 9.0N (900 grams); 10U: 9.0N (900 grams).

EUROPEAN TYPICAL SF OPERATING FORCE: 2U: 3.5N±0.5N (350 grams±100 grams); 4U: 5N±1N (500 grams±100 grams); 6U: 6.5N±1N (650 grams±100 grams); 8U: 9.0N±1N (900 grams±100 grams).

OPERATING TEMPERATURE RANGE: -40˚C to 70˚C.

Materials

HOUSING: Polycarbonate UL 94V-0 or polyester UL 94V-0.

ACTUATOR: Polyester UL 94V-0.

MOVABLE CONTACTS: Bimetal brass, silver plated, gold plate over nickel.

STATIONARY CONTACTS & TERMINALS: Brass, silver plated, gold plated.

TERMINAL BOARD: Polyester UL 94V-0.

RETURN SPRING: Music wire.

TERMINAL SEAL: RTV adhesive sealant.

CHASSIS: Steel.

LOCKOUT PIN: Steel.

BLOCKERS: Steel.

Build-A-Switch

To order, simply select desired option from each category and place in the appropriate box. Available options are shown and described on pages A-88 thru A-95. For additional options not shown in catalog, consult Customer Service Center.

If requesting only a switch, select either a North American or European switch as noted below. Chassis and buttons are sold separately. If multiple stations are selected, we will assume all switches are the same unless noted otherwise.

North American Order Code - Switch Only

Designation
- **F** F Series
- **FLT** Light touch F series
- **ZF** Central mounted F series

Contact Arrangement
- **2U** 2PDT
- **4U** 4PDT
- **6U** 6PDT
- **8U** SPDT
- **10U** 10PDT

Mechanical Function
- **OA** Momentary
- **EE** Alternate (push-push)
- **GR** Interlock
- **AOR** Central release
- **OASP** Momentary with lockout
- **GRSP** Interlock with lockout

Terminal Sealing
- **(NONE)** None
- **TB** Top/bottom

Terminal Style
- **(NONE)** Solder lugs & PC pins
- **01A** Cut solder lugs
- **01B** Cut PC pins, for other configurations, consult factory

Electrical Function
- **(NONE)** BBM Break-Before-Make
- **M** MBB (special) Make-Before-Break

Contact Material
- **(NONE)** Silver, AG
- **AU** Gold

Dress nut*
*Central mounted F series only

- **(NONE)** No dress nut
- **B** Black
- **C** Chrome

F Series
Pushbutton Switches

European Order Code - Switch Only

Designation
- **SF** F Series
- **ZF** Central mounted F series

Contact Arrangement
- **2U** 2PDT
- **4U** 4PDT
- **6U** 6PDT
- **8U** SPDT

Mechanical Function
- **OA** Momentary
- **EE** Alternate (push-push)
- **GR** Interlock

Terminal Style
- **(NONE)** Solder lugs & PC pins
- **LB** Cut solder lugs
- **PB** Cut PC pins, for other configurations, consult factory

Electrical Function
- **(NONE)** BBM

Contact Material
- **(NONE)** Silver, AG
- **P** Gold

Dress nut*
*Central mounted F series only

- **(NONE)** No dress nut
- **B** Black
- **C** Chrome

*Minimum order quantities apply.

Order Code - Buttons

Solid Buttons

Style
- **F01** FMR
- **F02** FG*
- **F12** FSC
- **F13** FSD
- **F14** FU12
- **F15** FSB
- **F16** FE
- **F19** FA
- **F21** F001

Button Color
- **01** Black
- **02** White
- **03** Red
- **04** Light gray

*Button options for central mounting configurations, use 'FG' for central mount with chrome dress nut, use 'FA200' for central mount with black dress nut.

Mechanical Indicator Buttons

Style
- **F01** FA100
- **F02** FA101
- **F07** FA120
- **F08** FA201
- **F11** FA200*

Shell Color
- **01** Black

Out Position Color
- **01** Black

In Position Color
- **02** White
- **06** Yellow
- **07** Blue
- **08** Green
- **12** Orange

BUTTON REMOVAL

A button of a push-push switch should only be removed in the "OFF" non-latching position.

Order Code - Chassis

To order a switch with chassis, create the switch part number listed above and add the Chassis part number configurator information at the end of the part number.

Note: We do not guarantee or recommend interlocking beyond 10 stations.

C

No. of Stations
- **01 thru 23** Comes with standard .094 (2,4mm) mounting holes Note: Single station chassis available with special mounting configurations, consult factory.

Spacing between Stations
- **00** Single station
- **10** 10mm
- **12.5** 12.5mm
- **15** 15mm
- **17.5** 17.5mm
- **20** 20mm

Special Acknowledgements
See note

*Minimum order quantities apply.

SWITCHES WITH STANDARD OPTIONS

F2UEE

CONTACT ARRANGEMENT	LENGTH DIM 'L'
2U	0.827 (21,00)
4U	1.300 (33,00)
6U	1.770 (45,00)
8U	2.240 (57,00)
10U	2.720 (69,00)

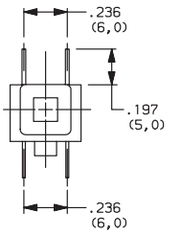

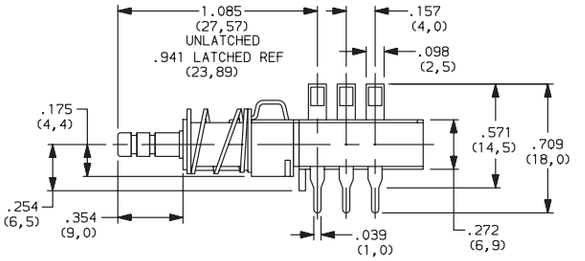

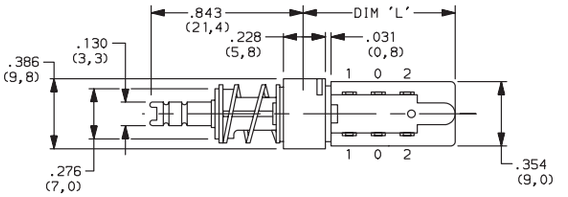

ZF2UEEBF11010108

CONTACT ARRANGEMENT	LENGTH DIM 'L'
2U	0.827 (21,00)
4U	1.300 (33,00)
6U	1.770 (45,00)
8U	2.240 (57,00)
10U	2.720 (69,00)

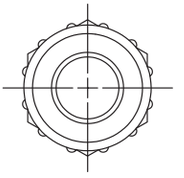

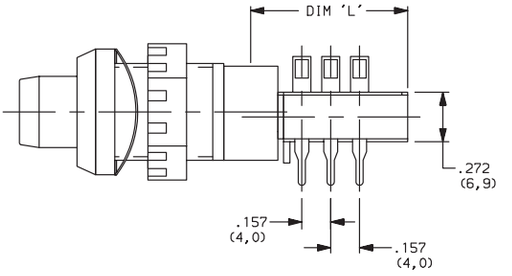

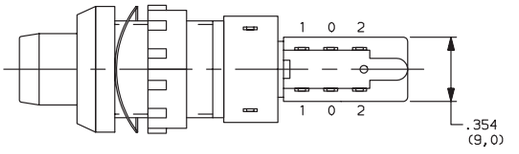

DESIGNATION

Designation, North America

F F Series
FLT Light touch F series
ZF Central mounted F series

Designation, Europe

SF F Series
ZF Central mounted F series

Third Angle Projection

Dimensions are shown: Inches (mm)
Specifications and dimensions subject to change

F Series
Pushbutton Switches

CONTACT ARRANGEMENT

OPTION CODE	NO. OF POLES	SCHEMATIC
2U	2PDT	
4U	4PDT	2X
6U	6PDT	3X
8U	8PDT	4X
10U	10PDT	5X

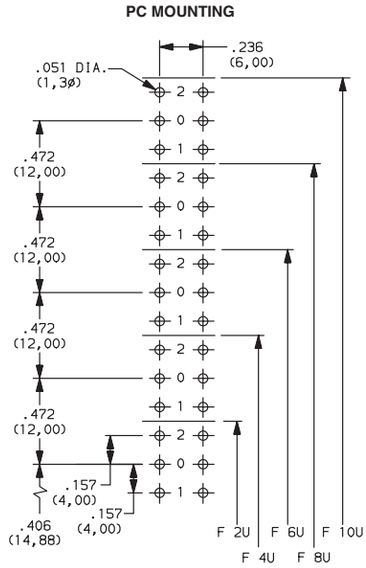

MECHANICAL FUNCTION

North America

OPTION CODE	FUNCTION
OA	Momentary
EE	Alternate (push-push)
GR	Interlock
AOR	Central release
OASP	Momentary with lockout
GRSP	Interlock with lockout

Europe

OPTION CODE	FUNCTION
OA	Momentary
EE	Alternate (push-push)
GR	Interlock

TERMINAL SEALING

(NONE) NO SEAL

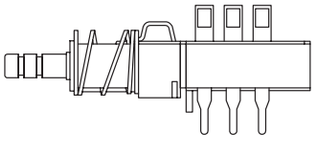

F2UEE shown in example above.

TB TOP & BOTTOM

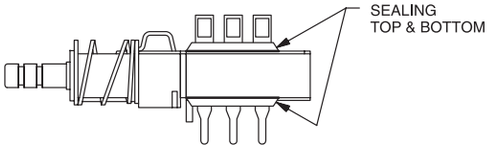

NOTE: Available for North America only

Third Angle Projection

Dimensions are shown: Inches (mm)
Specifications and dimensions subject to change

TERMINAL STYLE

(NONE) SOLDER LUGS & PC PINS

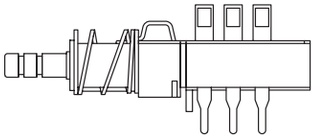

01A CUT SOLDER LUGS (North America)

LB CUT SOLDER LUGS (Europe)

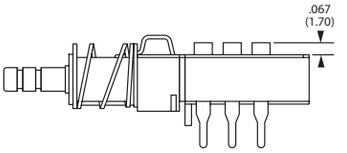

01B CUT PC PINS (North America)

PB CUT PC PINS (Europe)

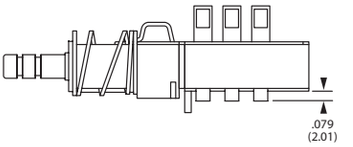

ELECTRICAL FUNCTION

OPTION CODE	FUNCTION
(NONE)	BBM Non-shorting
M	MBB Shorting (North America only)

CONTACT MATERIAL

NORTH AMERICA OPTION CODE	EUROPE OPTION CODE	RoHS COMPLIANT *	RoHS COMPATIBLE *	MATERIAL	RATING
(NONE)	(NONE)	YES	YES	SILVER, AG	50 VA/15 W; 125/30 V; 0.5/0.5 A
AU	P	YES	YES	GOLD	1 VA/300mW; 50/30 V; 0.04 A/0.01 A

* Note: See Technical Data section of this catalog for RoHS compliant and compatible definitions and specifications.

DRESS NUT

(NONE) NO DRESS NUT FOR F & F/LT DESIGNATIONS

B BLACK

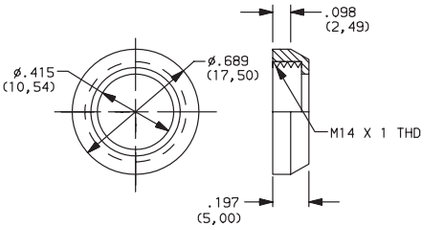

PANEL CUTOUT

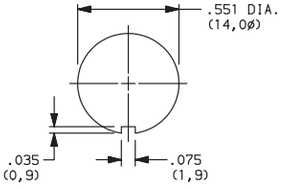

NOTE: Available with ZF designation and FA200 buttons.

C CHROME

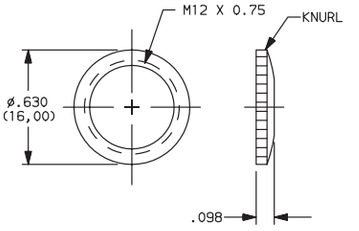

PANEL CUTOUT

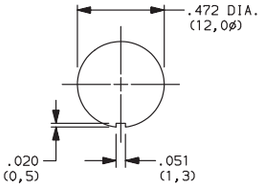

NOTE: Available with ZF designation and FG button.

Third Angle Projection

Dimensions are shown: Inches (mm)
Specifications and dimensions subject to change

F Series
Pushbutton Switches

SOLID BUTTON

COLOR
STYLE

STYLE

F01 FMR

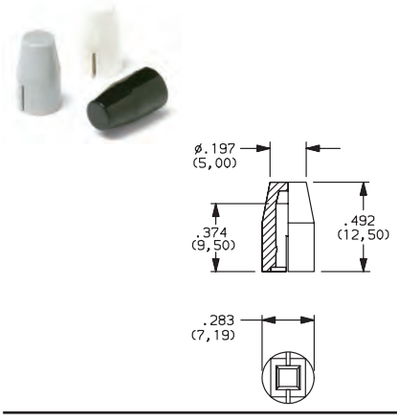

F02 FG

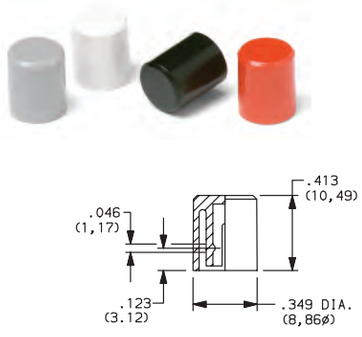

F12 FSC

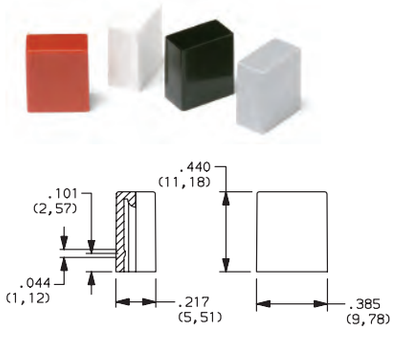

F13 FSD

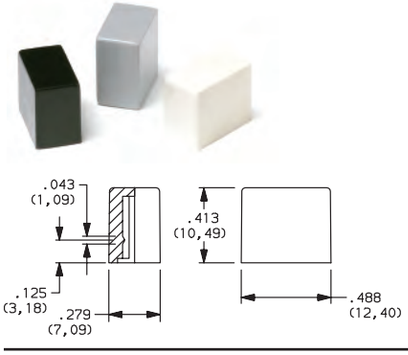

F14 FU12

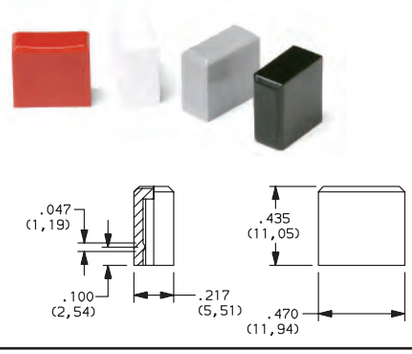

F15 FSB

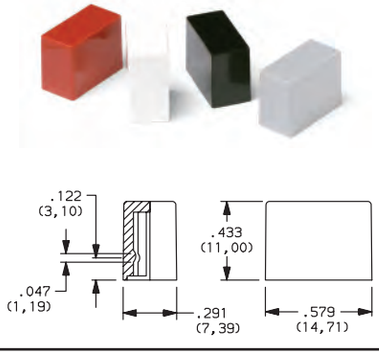

F16 FE

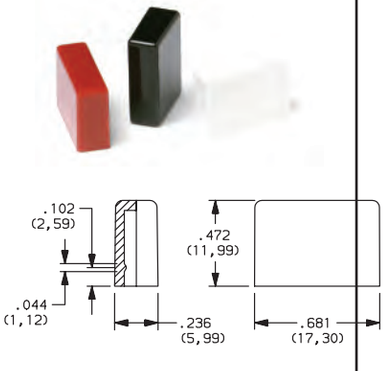

F19 FA

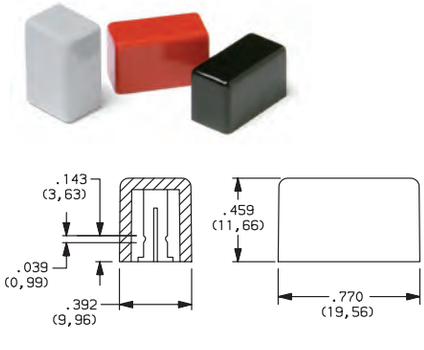

F21 F001

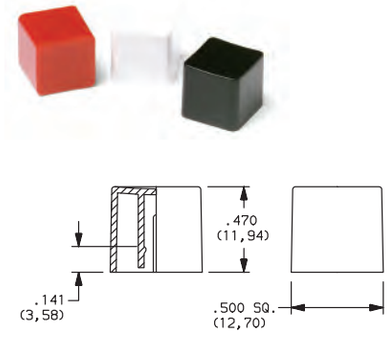

OPTION CODE	COLOR
01	BLACK
02	WHITE
03	RED
04	LT. GRAY

Dimensions are shown: Inches (mm)
Specifications and dimensions subject to change

MECHANICAL BUTTON

SHELL COLOR | IN POSITION COLOR
STYLE | OUT POSITION COLOR

STYLE

F01 FA100

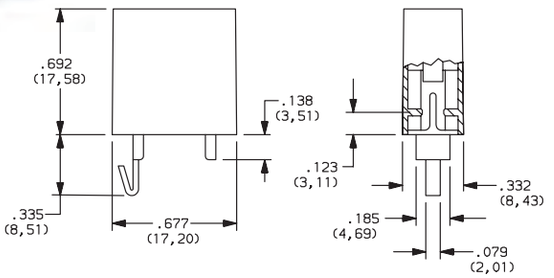

F02 FA101

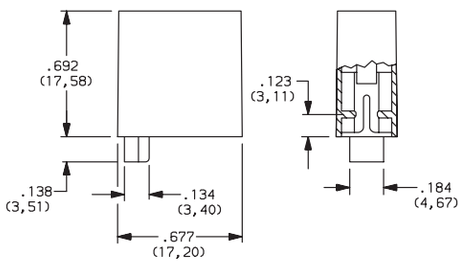

F07 FA120

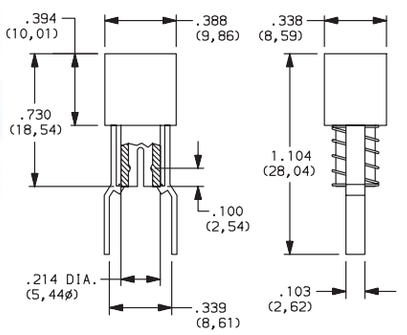

F08 FA201

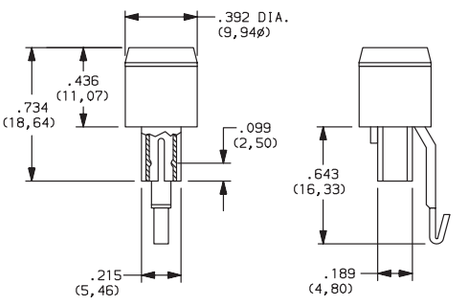

F11 FA200

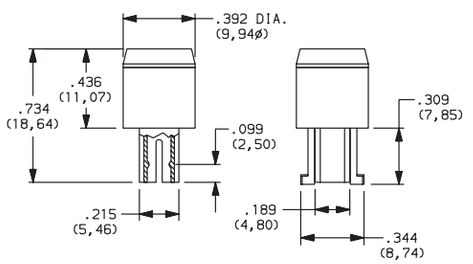

SHELL COLOR

01 BLACK

OUT POSITION COLOR

01 BLACK

IN POSITION COLOR

OPTION CODE	COLOR
02	WHITE
06	YELLOW
07	BLUE
08	GREEN
12	ORANGE

Dimensions are shown: Inches (mm)
Specifications and dimensions subject to change

F Series
Pushbutton Switches

CHASSIS

SPACING

NO. OF STATIONS

NUMBER OF STATIONS

C00 Thru C10 Comes with standard 0.094 (2,44mm) mounting holes

NOTE: Single station chassis available with mounting configurations, consult factory.

SPACING

00 SINGLE STATION

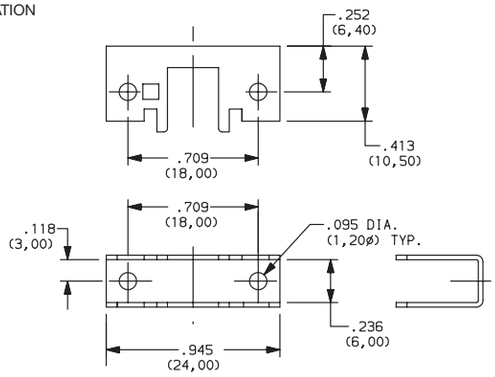

10 10mm

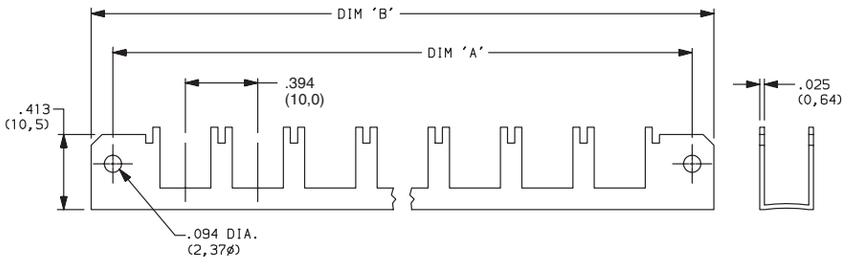

No. of Stations	Dim. 'A'	Dim. 'B'	Tolerance
2	1.182 (30,02)	1.418 (36,02)	0.005
3	1.575 (40,01)	1.811 (46,00)	0.010
4	1.969 (50,01)	2.205 (56,01)	0.010
5	2.363 (60,02)	2.599 (66,01)	0.010
6	2.757 (70,03)	2.993 (76,02)	0.015
7	3.150 (80,01)	3.386 (86,00)	0.015
8	3.544 (90,02)	3.780 (96,01)	0.015
9	3.938 (100,03)	4.174 (106,02)	0.015
10	4.331 (110,01)	4.567 (116,00)	0.015

12.5 12.5mm

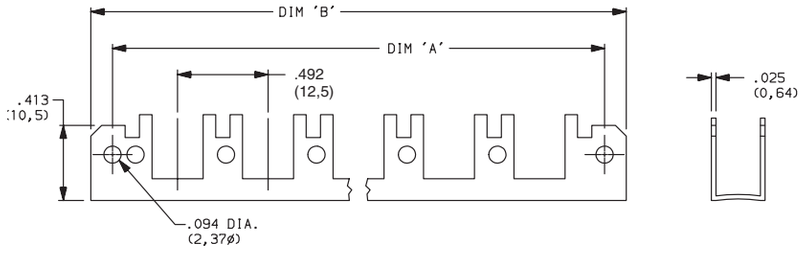

No. of Stations	Dim. 'A'	Dim. 'B'	Tolerance
2	1.200 (30,48)	1.436 (36,47)	0.005
3	1.692 (42,98)	1.928 (48,97)	0.010
4	2.184 (55,47)	2.420 (61,47)	0.010
5	2.676 (67,97)	2.912 (73,96)	0.010
6	3.169 (80,49)	3.405 (86,49)	0.015
7	3.661 (92,99)	3.897 (98,98)	0.015
8	4.153 (105,49)	4.389 (111,48)	0.015
9	4.645 (117,98)	4.881 (123,98)	0.015
10	5.137 (130,48)	5.373 (136,47)	0.015

Third Angle Projection

Dimensions are shown: Inches (mm)
Specifications and dimensions subject to change

CHASSIS

SPACING

NO. OF STATIONS

SPACING

15 15mm

No. of Stations	Dim. 'A'	Dim. 'B'	Tolerance
2	1.374 (34,90)	1.615 (41,02)	0.005
3	1.969 (50,01)	2.205 (56,01)	0.010
4	2.560 (65,02)	2.796 (71,02)	0.010
5	3.150 (80,01)	3.386 (86,00)	0.010
6	3.741 (95,02)	3.977 (101,02)	0.015
7	4.332 (110,03)	4.568 (116,03)	0.015
8	4.922 (125,02)	5.158 (131,01)	0.015
9	5.513 (140,03)	5.749 (146,02)	0.015
10	6.103 (155,02)	6.339 (161,01)	0.015

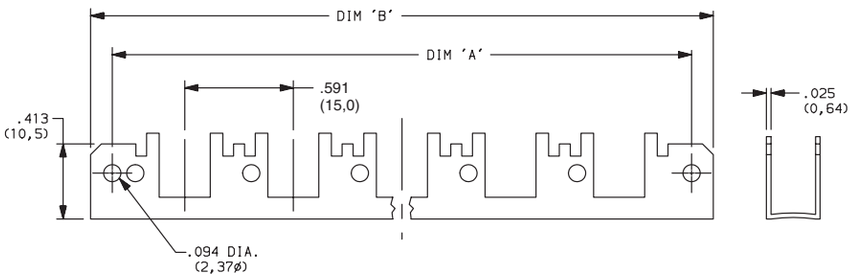

17.5 17.5mm

No. of Stations	Dim. 'A'	Dim. 'B'	Tolerance
2	1.477 (37,52)	1.713 (43,51)	0.005
3	2.166 (55,02)	2.402 (61,01)	0.010
4	2.855 (75,52)	3.091 (78.51)	0.010
5	3.544 (90,02)	3.780 (96,01)	0.010
6	4.233 (107,52)	4.469 (113,51)	0.015
7	4.922 (125,02)	5.158 (131,01)	0.015
8	5.611 (142,52)	5.847 (148.51)	0.015
9	6.300 (160,02)	6.536 (166,01)	0.015
10	6.989 (177,52)	7.225 (183,52)	0.015

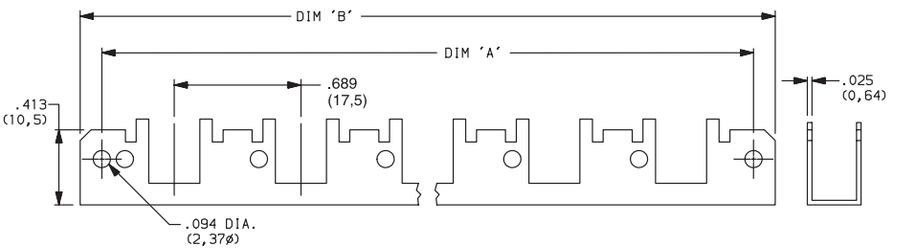

20 20mm

No. of Stations	Dim. 'A'	Dim. 'B'	Tolerance
2	1.575 (40,01)	1.811 (46,00)	0.005
3	2.363 (60,02)	2.599 (66,01)	0.010
4	3.150 (80,01)	3.386 (86,00)	0.010
5	3.938 (100,03)	4.174 (106,02)	0.010
6	4.725 (120,02)	4.961 (126,01)	0.015
7	5.512 (140,00)	5.748 (146,00)	0.015
8	6.300 (160,02)	6.536 (166,01)	0.015
9	7.087 (180,01)	7.323 (186,00)	0.015
10	7.875 (200,03)	8.111 (206,02)	0.015

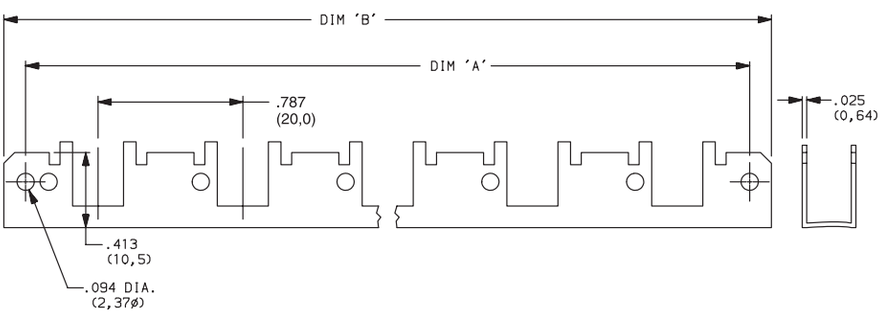

Third Angle Projection

Dimensions are shown: Inches (mm)
Specifications and dimensions subject to change

NE-18 Series
Mains / Power Switches

Features/Benefits

- ***Chassis or panel mount***
- ***Various buttons***
- ***Various contact configurations***
- ***RoHS compliant***

Typical Applications

- ***Mains/power switching***
- ***Consumer electronics***
- ***Audio equipment***
- ***Digital products***

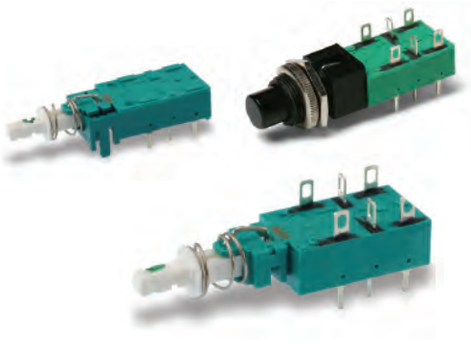

UL61058-1

Specifications

ELECTRICAL RATING:

NE18 Series:

8A GP, 125 VAC, 50/60 Hz, 1E4, T70

6A GP, 250 VAC, 50/60 Hz, 1E4, T70

6(4)A RM, 250 VAC, 50/60 Hz, 1E4, T70

6/48A RC, 250 VAC, 50/60 Hz, 1E4, T70

1RA, 100 VDC, 1E4, T70

8RA, 30VDC, 1E4, T70

NE18CTII Series:

4A GP, 250 VAC, 50/60 Hz, 1E4, T70

4/48A RC, 250 VAC, 50/60 Hz, 1E4, T70

1RA, 100 VDC, 1E4, T70

4RA, 30VDC, 1E4, T70

DIELECTRIC STRENGTH (50 Hz, 1 min.): 2000 V

OPERATING LIFE AT MAX. LOAD AND AT MAX. INRUSH CURRENT: ^10^4 operations[5])

CONTACT RESISTANCE: Initial: 50mΩ; After 10^4 operations: 70mΩ.

INSULATION RESISTANCE: ^10^{12} Ωchassis – nearest contact; ^10^{12} Ωmains contact – mains contact; ^10^{12} Ωmains contact – mains contact after 10^4 operations.

LOW VOLTAGE CONTACT:

SWITCHING POWER MAX.: 12W

SWITCHING VOLTAGE MAX.: 24V

SWITCHING CURRENT MAX.: 0.5A

TOTAL TRAVEL: 4.7mm (.185 inch)

LATCHING TRAVEL: 3.3mm (.130 inch)

OPERATING FORCE: Without auxiliary low voltage contacts: NE18: 7N (700 grams); NE18CTII: 9.5N (950 grams).

With auxiliary low voltage contacts: NE18: 8N (800 grams); NE18CTII: 11N (1100 grams).

SEALING: Dust proof.

Materials

HOUSING, ACTUATOR & TERMINAL BOARD: Thermoplastic polyester (UL 94V-0).

MOVABLE CONTACT: Silver nickel alloy, silver plated.

FIXED CONTACTS: Silver nickel alloy, silver plated.

COMMON CONTACTS & TERMINALS: Copper alloy, silver plated.

RETURN SPRING: Music wire.

NOTE: All models arer RoHS compliant and compatible.

NOTE: Specifications and materials listed above are for switches with standard options. For information on specific and custom switches, consult Customer Service Center.

Build-A-Switch

To order, simply select desired option from each category and place in the appropriate box. Available options are shown and described on pages A-97 thru A-104. For additional options not shown in catalog, consult Customer Service Center.

If requesting only a switch, select the switch as noted below. Buttons are sold separately.

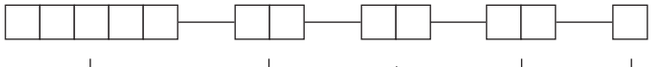

Designation
NE18 NE1B
ZNE18 Cental mounted NE1B

Contact Arrangement
NE18 code # - see list

Mechanical Function
OA Momentary
EE Alternate (push-push)

Single Station Chassis
01 With .094 mounting holes
(NONE) No chassis
02 With 4-40 tapped mounting holes
03 Special chassis (consult factory)

Dress nut*
*Central mounted
ZNE18 series only
(NONE) No dress nut
B Black
C Chrome

Dimensions are shown: Inches (mm)
Specifications and dimensions subject to change

Order Code - Buttons

Solid Buttons

Style
- **F01** FMR
- **F02** FG*
- **F12** FSC
- **F13** FSD
- **F14** FU12
- **F15** FSB
- **F16** FE
- **F19** FA
- **F21** F001

Button Color
- **01** Black
- **02** White
- **03** Red
- **04** Light gray

Mechanical Indicator Buttons

Style
- **F01** FA100
- **F02** FA101
- **F07** FA120
- **F08** FA201
- **F11** FA200*

Shell Color
- **01** Black

Out Position Color
- **01** Black

In Position Color
- **02** White
- **06** Yellow
- **07** Blue
- **08** Green
- **12** Orange

*Button options for central mounting configurations, use 'FG' for central mount with chrome dress nut, use 'FA200' for central mount with black dress nut.

BUTTON REMOVAL

A button of a push-push switch should only be removed in the "OFF" non-latching position.

DESIGNATION & SWITCHES WITH STANDARD OPTIONS

NE1838EE

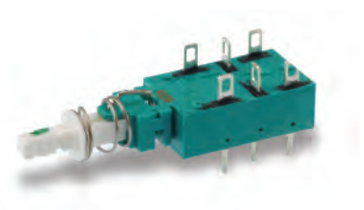

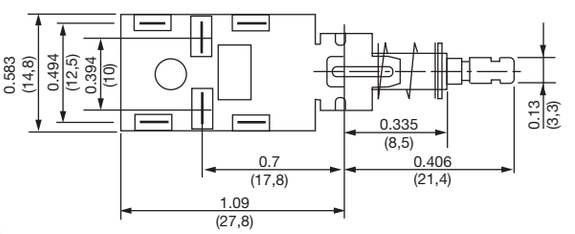

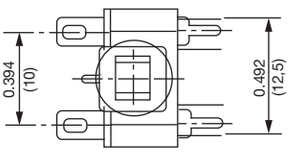

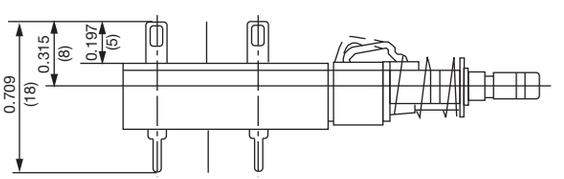

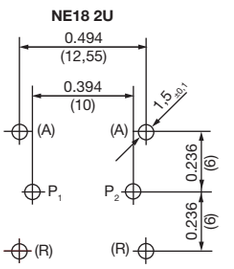

Third Angle Projection

Dimensions are shown: Inches (mm)
Specifications and dimensions subject to change

NE-18 Series
Mains / Power Switches

DESIGNATION & SWITCHES WITH STANDARD OPTIONS

NE1839EE

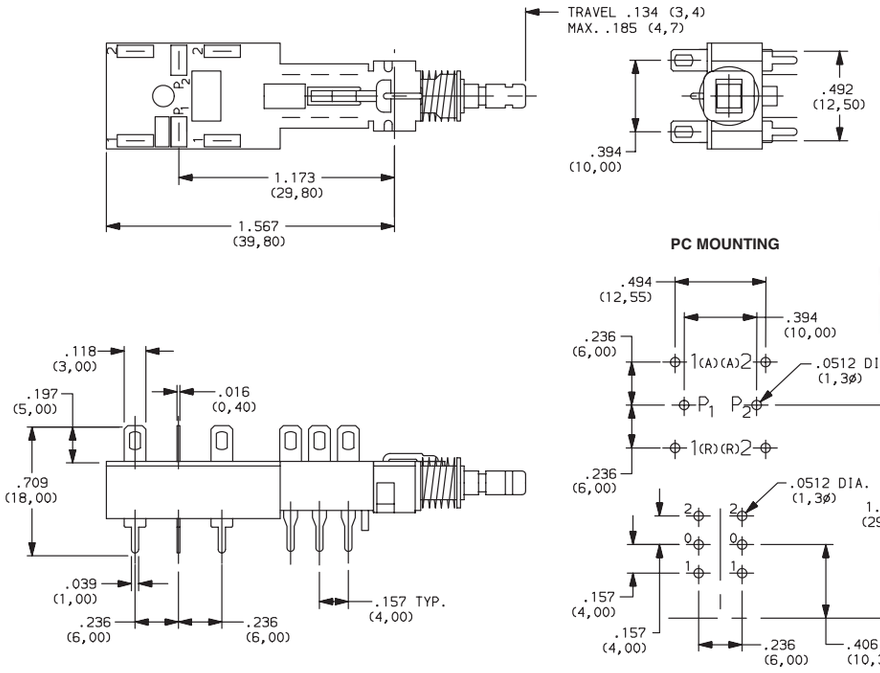

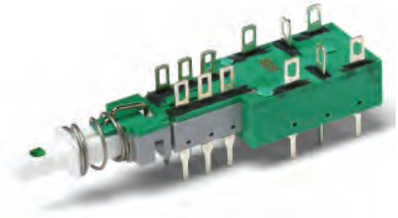

NE1846EE

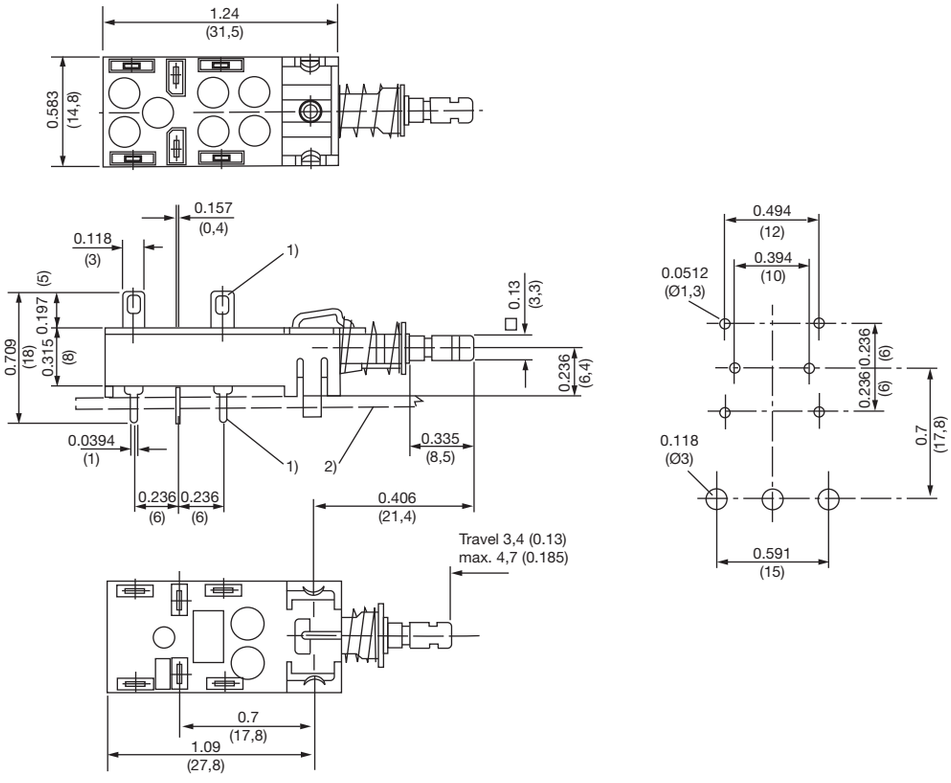

Third Angle Projection

Dimensions are shown: Inches (mm)
Specifications and dimensions subject to change

DESIGNATION & SWITCHES WITH STANDARD OPTIONS

ZNE1838EECF0201

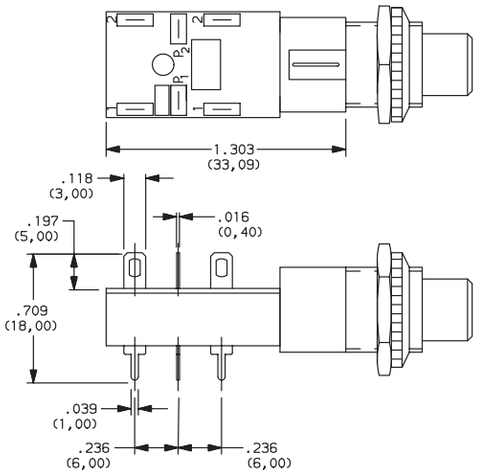

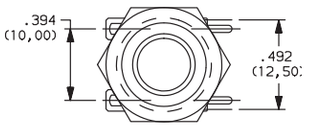

PC MOUNTING

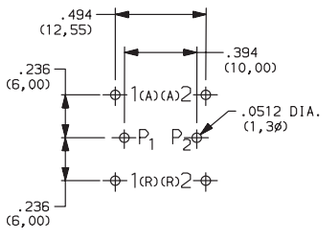

Third Angle Projection

Dimensions are shown: Inches (mm)
Specifications and dimensions subject to change

NE-18 Series
Mains / Power Switches

CONTACT ARRANGEMENT

OPTION CODE Contact capacity and availability	STYLE	ELECTRICAL CIRCUIT
37	NE18 — 2AX	DPST
38	NE18 — 2UX	DPDT
51	2U + NE18 — 2AX	DPST*
52 (4A/64)	NE18CTII — 2AX	DPST
39	2U + NE18 — 2UX	DPDT*
41	NE18 — 2AP	DPST
42	NE18 — 2UP	DPDT
43	NE18 — 2AW	DPST
44	NE18 — 2UW	DPDT
45	NE18 — 2ASX	DPST

OPTION CODE Contact capacity and availability	STYLE	ELECTRICAL CIRCUIT
46	NE18 — 2USX	DPDT
47	NE18 — 2ASP	DPST
48	NE18 — 2USP	DPDT
49	NE18 — 2ASW	DPST
50	NE18 — 2USW	DPDT
53 (4A/64)	2U + NE18CTII — 2AX	DPST
54	2U + NE18 — 2AW	DPST
55	2U + NE18 — 2AP	DPST
56	2U + NE18 — 2UW	DPDT
57	2U + NE18 — 2UP	DPDT

* 2U + Denotes auxiliary set of low current contacts DPDT
2A = DPST
2U = DPDT
S = Snap-in mounting
X = Solder lug/PC pins
W = Solder lugs only
P = PC pins only

NOTES
1. Contact plating is silver on all Power Switches.
2. The electrical function is Break Before Make (BBM) on all Power Switches.
3. The terminals will be epoxy sealed.

TYPE	POSSIBLE CONTACT ARRANGEMENT		CONTACT SPACING	PROTECTION CLASS (CEE 24)	APPROVALS
	POWER CONTACTS[1]	AUXILIARY CONTACTS			
NE18	2A[2]	2U	> 3mm (.118 inch)	II	UL61058-1
NE18	2A[2] 2U	2U	> 3mm (.118 inch)	I	UL61058-1
NE18CTII	2A[2]	2U	> 3mm (.118 inch)	II	UL61058-1

1) A = make contact, U = changeover contact
2) With 2A mains contacts: Mounting only by PC pins is not sufficient.

MECHANICAL FUNCTION

OPTION CODE	FUNCTION
OA	Momentary
EE	Alternate (push-push)

Third Angle Projection

Dimensions are shown: Inches (mm)
Specifications and dimensions subject to change

SINGLE STATION CHASSIS

01 WITH .094 MOUNTING HOLES

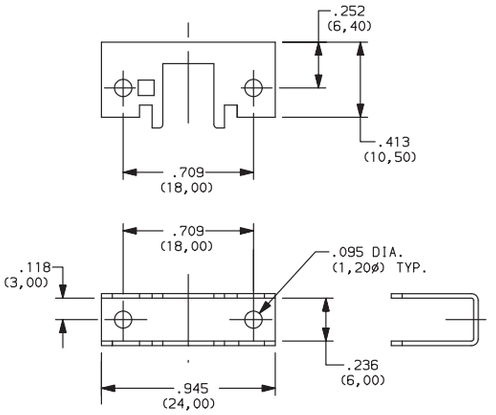

(NONE) NO CHASSIS

02 WITH 4-40 TAPPED MOUNTING HOLES

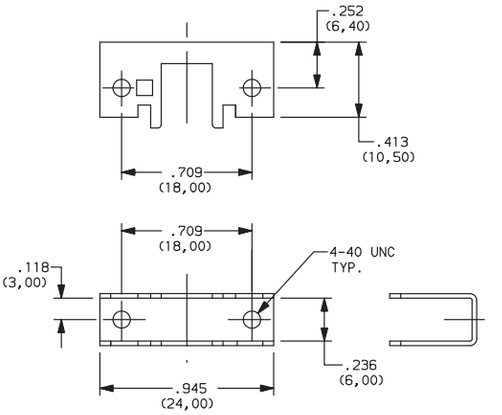

03 SPECIAL CHASSIS (CONSULT FACTORY)

DRESS NUT

(NONE) NO DRESS NUT

B BLACK

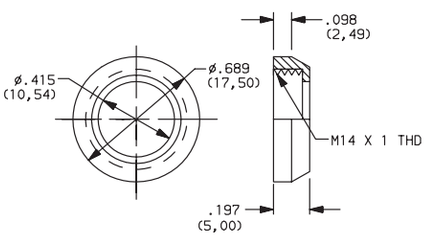

PANEL CUTOUT

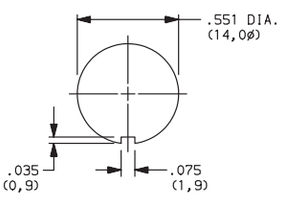

NOTE: Available with ZNE18 designation and FA200 buttons.

C CHROME

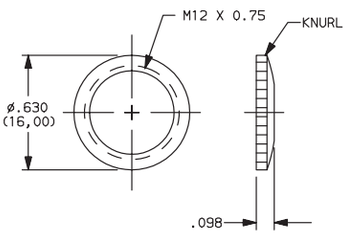

PANEL CUTOUT

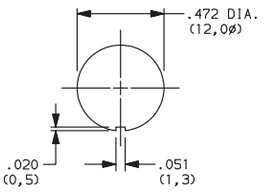

NOTE: Available with ZNE18 designation and FG button.

Third Angle Projection

Dimensions are shown: Inches (mm)
Specifications and dimensions subject to change

NE-18 Series
Mains / Power Switches

SOLID BUTTON

STYLE

F01 FMR

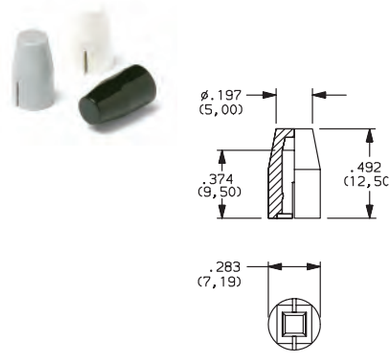

F02 FG

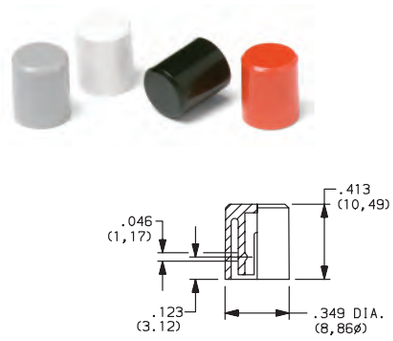

F12 FSC

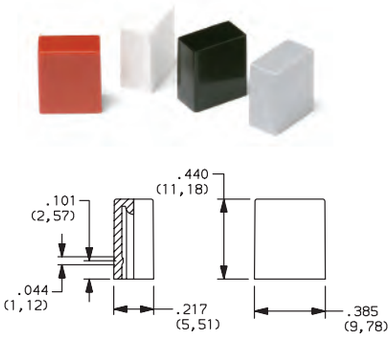

F13 FSD

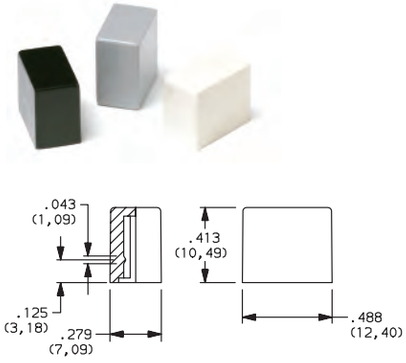

F14 FU12

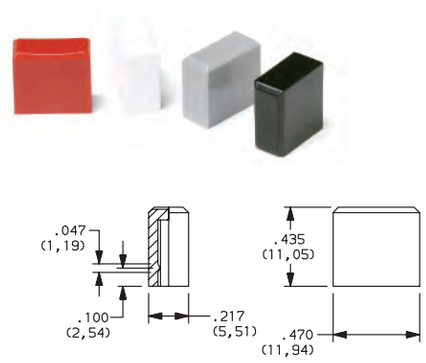

F15 FSB

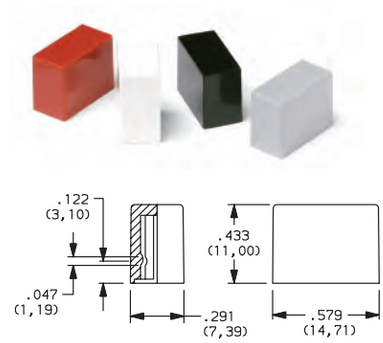

F16 FE

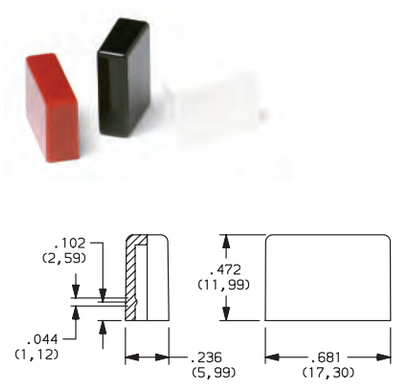

F19 FA

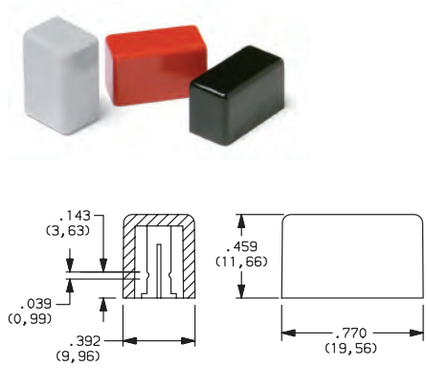

OPTION CODE	COLOR
01	BLACK
02	WHITE
03	RED
04	LT. GRAY

Third Angle Projection

Dimensions are shown: Inches (mm)
Specifications and dimensions subject to change

SOLID BUTTON

COLOR
STYLE

STYLE

F21 F001

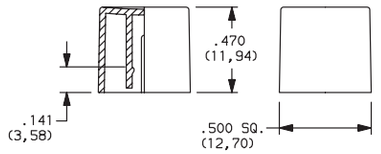

OPTION CODE	COLOR
01	BLACK
02	WHITE
03	RED
04	LT. GRAY
09	BLACK/CHROME (F03,F06 & F07 buttons only

MECHANICAL BUTTON

SHELL COLOR
IN POSITION COLOR
STYLE
OUT POSITION COLOR

STYLE

F01 FA100

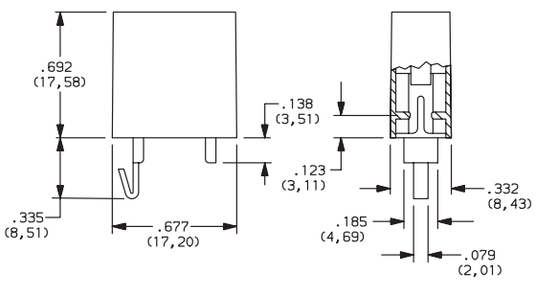

F02 FA101

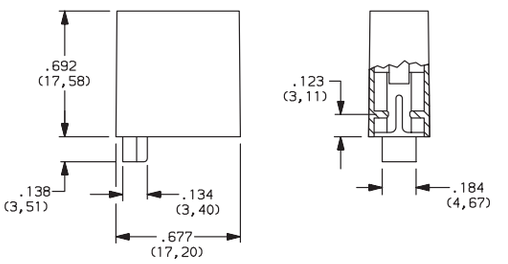

Third Angle Projection

Dimensions are shown: Inches (mm)
Specifications and dimensions subject to change

NE-18 Series
Mains / Power Switches

MECHANICAL BUTTON

SHELL COLOR — IN POSITION COLOR
STYLE — OUT POSITION COLOR

STYLE

F08 FA201

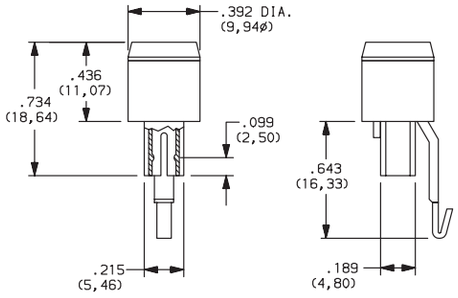

F11 FA200

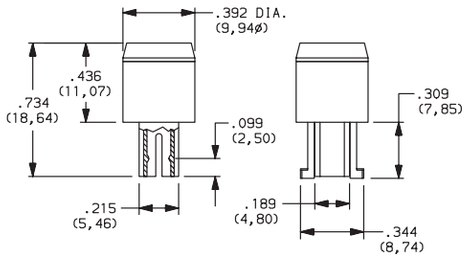

SHELL COLOR

01 BLACK

OUT POSITION COLOR

01 BLACK

IN POSITION COLOR

OPTION CODE	COLOR
02	WHITE
06	YELLOW
07	BLUE
08	GREEN
12	ORANGE

Third Angle Projection

Dimensions are shown: Inches (mm)
Specifications and dimensions subject to change

FP Series
Sealed Ultra Miniature Pushbutton Switches

Features/Benefits

- ***Vertical and right angle mount***
- ***Extended operating life 50,000 cycles***
- ***Optional caps***
- ***Sealed against soldering and cleaning processes***
- ***RoHS compliant***

Typical Applications

- ***Networking equipment***
- ***Modems***
- ***Reset functions***
- ***Instrumentation***

Specifications

CONTACT RATING: Max. 0.4 VA (28 V DC or V AC).
ELECTRICAL LIFE: 50,000 cycles.
CONTACT RESISTANCE: (10mA @ 2 V DC) 80 mΩ max. initial.
INSULATION RESISTANCE: 500MΩ min. @ 500 V DC - 1 minute.
OPERATING TEMPERATURE: –20°C to 80°C.
SOLDERABILITY: Per MIL-STD-202F method 208D, or EIA RS-186E method 9.
PACKAGING:
Tray pack - 100 switches per tray.
Caps (optional) - Bulk bag; 100 caps per bag.

NOTE: Specifications and materials listed above are for switches with standard options. For information on specific and custom switches, consult Customer Service Center.

Materials

MOVABLE CONTACTS:
Base metal: Phosphor bronze
Plating: Gold over nickel plate
FIXED CONTACTS:
Base metal: Brass
Plating: Gold over nickel plate
COVER: PA66 - Black
ACTUATOR: PPS - Black
BASE: PPS - Black
SUPPORT BRACKET (A1 Terminal Style only): Steel with tin plate

Build-A-Switch

To order, simply select desired option from each category and place in the appropriate box. Available options are shown and described on pages A-106 thru A-107. For additional options not shown in catalog, consult Customer Service Center.

F P 1 1 – S P – ☐ ☐ – B 1 – T P – ☐ ☐

Designation
FP11 SPST N.O.

Actuator Length
SP Standard plunger 3.3mm

Terminal Style
C1 Vertical
A1 Right Angle

Contact Plating
B1 Gold over nickel plate

Packaging
TP Tray packaging

Cap
00 No cap
01 White cap - bulk bagged
02 Black cap - bulk bagged
03 Red cap - bulk bagged

Dimensions are shown: Inches (mm)
Specifications and dimensions subject to change

FP Series
Sealed Ultra Miniature Pushbutton Switches

SWITCH FUNCTION

C1 VERTICAL

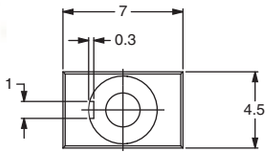

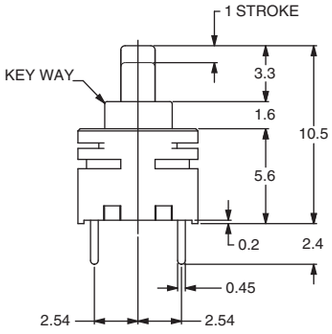

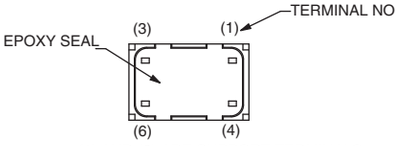

(4) AND (6) ARE SUPPORT TERMINALS

A1 RIGHT ANGLE

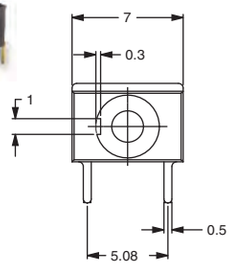

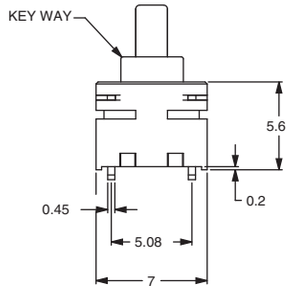

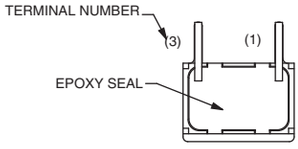

MODEL NO.	SWITCH FUNCTION POS. 1	SWITCH FUNCTION POS. 2
FP11	OFF	MOM
	CONNECTED TERMINALS	
	OPEN	1-3

SCHEMATIC SPST

ACTUATOR LENGTH

SP STANDARD PLUNGER 3.3MM

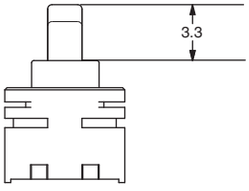

Third Angle Projection

Dimensions are shown: mm
Specifications and dimensions subject to change

TERMINAL STYLE

C1 VERTICAL

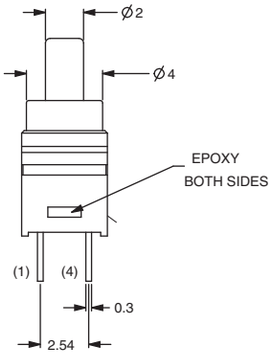

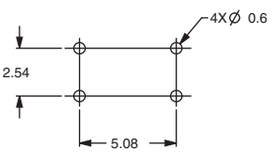

MOUNTING HOLE PATTERN

A1 RIGHT ANGLE

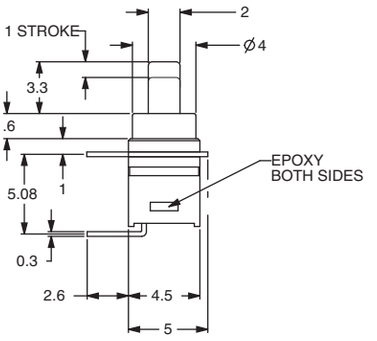

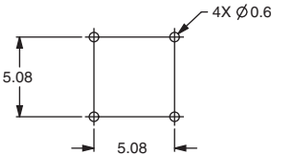

MOUNTING HOLE PATTERN

CONTACT PLATING

B1 GOLD OVER NICKEL PLATE

PACKAGING

TP TRAY PACKAGING

CAPS

OPTION CODE	DESCRIPTION
00	NO CAP
01	WHITE CAP, BULK BAGGED
02	BLACK CAP, BULK BAGGED
03	RED CAP, BULK BAGGED

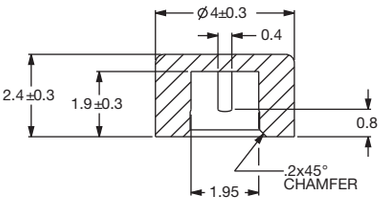

To purchase Caps separately without switch, please use these part numbers

PART #	COLOR
798D01000	WHITE
798D02000	BLACK
798D03000	RED

Third Angle Projection

Dimensions are shown: mm
Specifications and dimensions subject to change

AP Series
Industrial Pushbutton Switch

Features/Benefits

- *IP67 sealed*
- *1,000,000 life cycle*
- *Illumination / non-illumination*
- *Multiple colored caps*
- *Threaded or snap-in mounting*
- *Caps available separately*
- *RoHS compliant*

Typical Applications

- *Harsh environments*
- *Off-Road*
- *Industrial*
- *Medical*
- *Transportation*
- *Joystick control modules*
- *Gaming*
- *Military*

Specifications

FUNCTION: SPST Momentary
CONTACT ARRANGEMENT: N.O.
MOUNTING TYPE:
Snap-in (no panel seal)
Threaded body (hex nut, lock washer, and panel seal gasket provided)
Torque spec for threaded body: Do not exceed 8-9 in-lbs (0.9-1.0 N.m)

Mechanical

OPERATING LIFE: 1,000,000 cycles
TOTAL TRAVEL: 2.1 ± 0.2 mm
OPERATING POINT 1.55 ± 0.25 mm
OVER TRAVEL: 0.6 min.
OPERATING FORCE: 4N ± 1N standard configuration; other force option 2N ± 0.5N
VIBRATION: 10-500 Hz 10g Max
SHOCK: 60g 11ms sawtooth wave

Electrical

CONTACT RATING:
200mA @ 24 V DC resistive (500,000 cycles)
100mA @ 50 V DC resistive (500,000 cycles)
400mA @ 32 V AC resistive (500,000 cycles)
125mA @ 125 V AC resistive (1,000,000 cycles)
DIELECTRIC STRENGTH: 1000 V AC min.
INSULATION RESISTANCE: 1 G Ω @ 500 VDC
INITIAL CONTACT RESISTANCE 50 mΩ max (without wire leads)
BOUNCE TIME: <5 ms

Materials

HOUSING: PBT
BASE: PBT
CAP: PBT
ACTUATOR:
Illuminated: Clear polycarbonate
Non-illuminated: PBT
INTERNAL SEAL: Silicone rubber
TERMINALS: Copper alloy, gold over silver plating
MOVABLE CONTACT: Copper alloy, gold over silver plating
TERMINAL SEAL: Epoxy
WIRE LEADS: UL1569 Black 22 AWG

Operating Environment

OPERATING TEMPERATURE: -40˚C to 85˚C (+105˚C non-illuminated)
ESD PROTECTION: 20 KV min.

Process Environment

SEALING: IP67 for threaded body
IP65 for snap-in version (no panel seal)

NOTE: Specifications and materials listed above are for switches with standard options. For information on specific and custom switches, please contact Customer Service.

Build-A-Switch

To order, simply select desired option from each category and place in the appropriate box.

A P — — — — — — — B — E

Designation
AP AP Series

Operating Force
2 2 Newtons
4 4 Newtons

Actuator Style
D Dome / Convex
C Concave
E Extended Dome
N None

Actuator Color
0 No Cap
2 Black
3 Red
4 Orange
5 Yellow
6 Green
7 Blue
9 Gray

Please contact Customer Service for additional colors and paint / laser etched button options.

Illumination
00 No LED*
01 Super White
02 Bi-color; Red (Green)
03 Red
05 Amber
06 Green
07 Super Blue
08 Bi-color; Amber (Green)

* No LED available in short body only

Bushing Style**
S** Snap-in plastic
T Threaded plastic

** No panel seal option
*** PC terminals not available with illumination

Termination
Z Solder Lug
W 12" Wire Leads 22 AWG
C*** PC Terminals

Contact Material
B Gold

Terminal Seal
E Epoxy
All models are epoxy sealed

Contact Customer Service for additional hardware options.

Specifications and dimensions subject to change

STANDARD VIEW

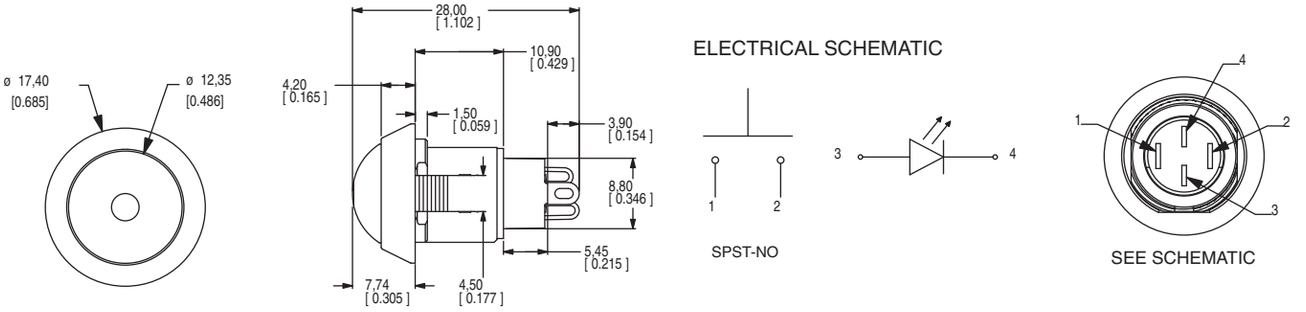

OPERATING FORCE

OPTION CODE	OPERATING FORCE
2	2 N, 200 g
4	4 N, 400 g

ACTUATOR STYLE

D DOME / CONVEX

E EXTENDED DOME

C CONCAVE

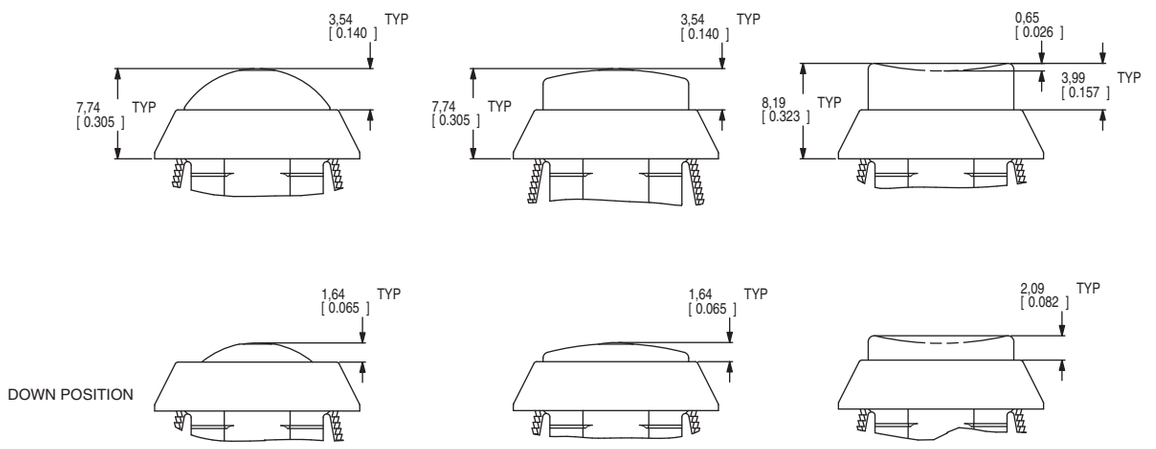

ACTUATOR COLOR

OPTION CODE	ACTUATOR COLOR
0	No Cap
2	Black
3	Red
4	Orange
5	Yellow
6	Green
7	Blue
9	Gray

For additional colors please contact Customer Service.

Third Angle Projection

Dimensions are shown: mm (inches
Specifications and dimensions subject to change

AP Series
Industrial Pushbutton Switch

ILLUMINATION

OPTION CODE	ILLUMINATION TYPE	TYPICAL INTENSITY* MIN	MAX	PEAK WAVELENGTH	Vf Forward Voltage
		(mcd)		(nm)	
00	Model without illumination	N/A		N/A	
01	LED Super White	4,000	5,000	N/A	3.5
02	LED Bi-Color – Red (Green)	10	20	635/565	2.0
03	LED Red	4	8	700	2.0
05	LED Amber	35	50	610	2.0
06	LED Green	35	50	565	2.0
07	LED Super Blue	800	1,500	470	3.8
08	LED Bi-Color – Amber (Green)	10	10	585/565	2.0

*LED FORWARD CURRENT: 20 mA
LED FORWARD VOLTAGE: see chart above
LED REVERSE VOLTAGE: 5.0 V MAX

* For information on specific and custom LED, please contact Customer Service.

NOTE:
For bi-color LED's the polarity must be reversed to alternate the color

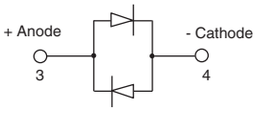

BUSHING STYLE

S SNAP-IN

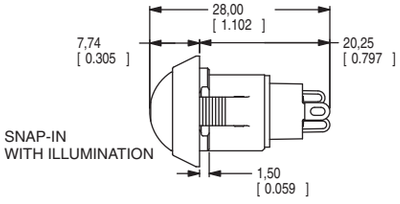

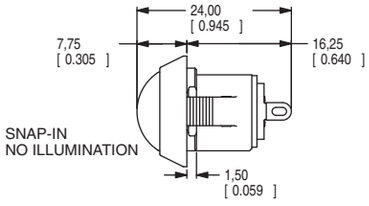

T THREADED PLASTIC

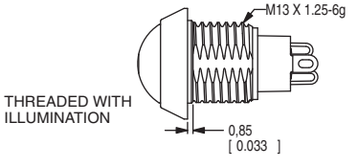

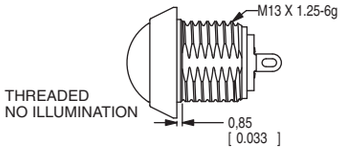

PANEL CUTOUT

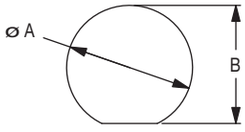

PANEL THICKNESS	DIM A (± 0.05 mm)	DIM B (± 0.05 mm)
1 mm [0.039 in]	13.70 mm [0.539 in]	13.00 mm [0.512 in]
2 mm [0.079 in]	13.80 mm [0.539 in]	13.00 mm [0.512 in]
3 mm [0.118 in]	13.90 mm [0.547 in]	13.10 mm [0.516 in]
THREADED BODY MIN PANEL THICKNESS 1 mm	13.70 mm [0.539 in]	13.00 mm [0.512 in]

Third Angle Projection

A 0.1mm min. chamfer on the leading edge of the mounting hole is recommended for snap-in version.

Dimensions are shown: mm (inches)
Specifications and dimensions subject to change

TERMINATION

Z SOLDER LUG

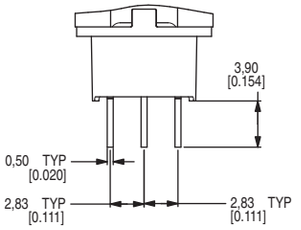

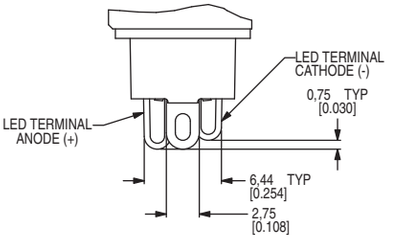

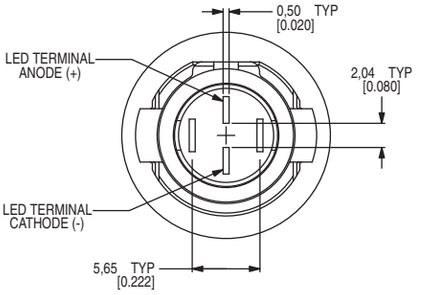

* Switching terminals are gold and LED terminals are silver

C PC TERMINALS

*** Illumination not available with PC Terminals

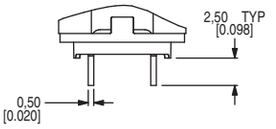

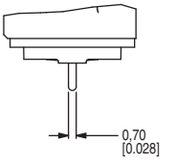

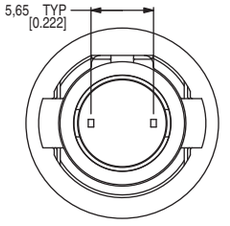

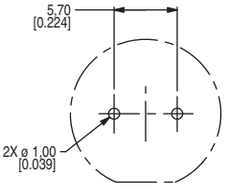

PCB HOLE PATTERN
BOARD VIEW

W 12" WIRE LEADS 22 AWG

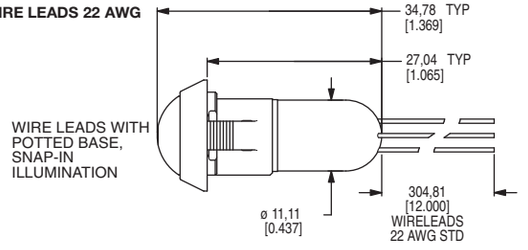

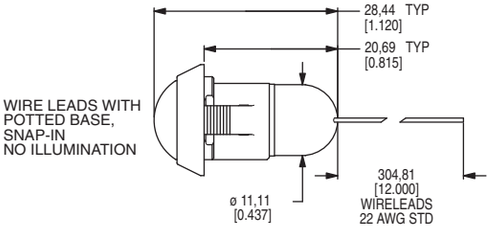

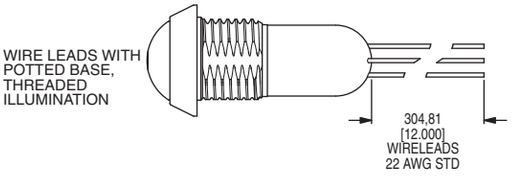

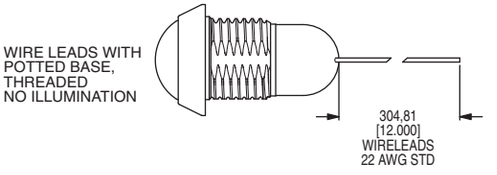

Wires: Black wires - Terminals
Red wires - LED (+) Positive
White wire - LED (-) Negative

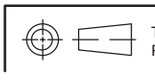

Third Angle
Projection

Dimensions are shown: mm (inches
Specifications and dimensions subject to change

AP Series
Industrial Pushbutton Switch

CONTACT MATERIAL

B GOLD

OPTION CODE	CONTACT MATERIAL
B	Gold

TERMINAL SEAL

E EPOXY

All models are epoxy sealed

HARDWARE

LOCK WASHER
Part Number 647D00000

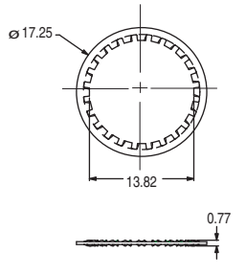

HEX NUT
Part number 515D00000

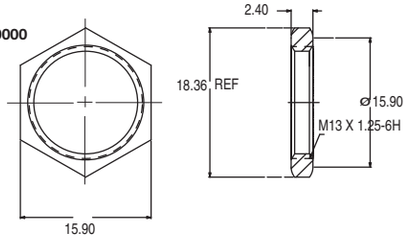

PANEL SEAL
Part Number 655D00000

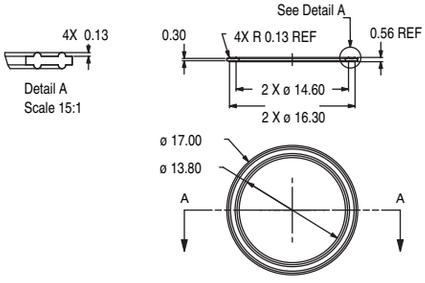

Caps available on next page

Third Angle Projection

Dimensions are shown: mm (inches)
Specifications and dimensions subject to change

AVAILABLE CAPS

481D XX XXX

Cap Color

Style

OPTION	CAP COLOR
01	WHITE
02	BLACK
03	RED
04	ORANGE
05	YELLOW
06	GREEN
07	BLUE
08	BROWN
09	GRAY

PART NUMBER	HOLE	STYLE
481DXX000	NO	DOME
481DXX001	YES	DOME
481DXX002	NO	EXTENDED DOME
481DXX003	YES	EXTENDED DOME
481DXX004	NO	CONCAVE
481DXX005	YES	CONCAVE

DOME

481DXX000 = NO HOLE
481DXX001 = HOLE

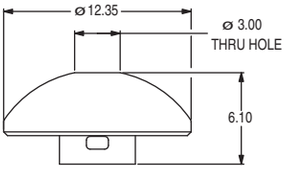

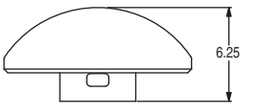

EXTENDED DOME

481DXX002 = NO HOLE
481DXX003 = HOLE

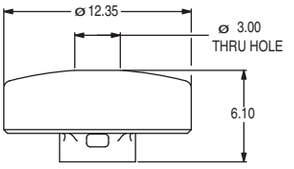

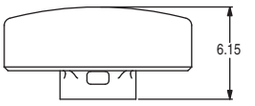

CONCAVE

481DXX004 = NO HOLE
481DXX005 = HOLE

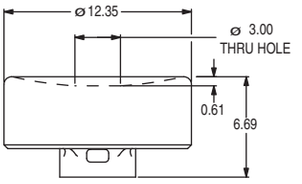

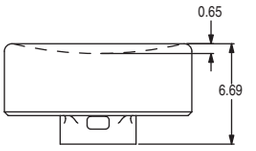

Third Angle Projection

Dimensions are shown: mm (inches)
Specifications and dimensions subject to change

APB Series
Backlit Pushbutton Switch

Features/Benefits

- *IP67 sealed*
- *1,000,000 life cycle*
- *Illumination*
- *Threaded or snap-in mounting*
- *RoHS compliant*

Typical Applications

- *Harsh environments*
- *Off-Road*
- *Industrial*
- *Medical*
- *Transportation*
- *Joystick control modules*
- *Gaming*
- *Military*

Specifications

FUNCTION: SPST Momentary
CONTACT ARRANGEMENT: N.O.
MOUNTING TYPE:
Snap-in (no panel seal)
Threaded body (hex nut, lock washer, and panel seal gasket provided)
Torque spec for threaded body: Do not exceed 8-9 in-lbs (0.9-1.0 N.m)

Mechanical

OPERATING LIFE: 1,000,000 cycles
TOTAL TRAVEL: 2.1 ± 0.2 mm
OPERATING POINT 1.55 ± 0.25 mm
OVER TRAVEL: 0.6 min.
OPERATING FORCE: 4N ± 1N standard configuration; other force option 2N ± 0.5N
VIBRATION: 10-500 Hz 10g Max
SHOCK: 60g 11ms sawtooth wave

Electrical

CONTACT RATING:
200mA @ 24 V DC resistive (500,000 cycles)
100mA @ 50 V DC resistive (500,000 cycles)
400mA @ 32 V AC resistive (500,000 cycles)
125mA @ 125 V AC resistive (1,000,000 cycles)
DIELECTRIC STRENGTH: 1000 V AC min.
INSULATION RESISTANCE: 1 G Ω @ 500 VDC
INITIAL CONTACT RESISTANCE 50 mΩ max (without wire leads)
BOUNCE TIME: <5 ms

Materials

HOUSING: PBT
BASE: PBT
CAP: Painted polycarbonate
ACTUATOR:
Illuminated: Clear polycarbonate
INTERNAL SEAL: Silicone rubber
TERMINALS: Copper alloy, gold over silver plating
MOVABLE CONTACT: Copper alloy, gold over silver plating
TERMINAL SEAL: Epoxy
WIRE LEADS: UL1569 Black 22 AWG

Operating Environment

OPERATING TEMPERATURE: -40˚C to 85˚C
ESD PROTECTION: 20 KV min.

Process Environment

SEALING: IP67 for threaded body
IP65 for snap-in version (no panel seal)

NOTE: Specifications and materials listed above are for switches with standard options. For information on specific and custom switches, please contact Customer Service.

Build-A-Switch

To order, simply select desired option from each category and place in the appropriate box.

A P B — [ ] — E — [ ][ ] — [ ] — [ ] — B — E — [ ][ ][ ]

Designation
APB APB Series

Operating Force
2 2 Newtons
4 4 Newtons

Cap
E Extended Dome (600E)

Illumination
01 Super White
07 Super Blue

Bushing Style
S Snap-in plastic
T Threaded plastic

Termination
Z Solder Lug
W 12" Wire Leads 22 AWG

Contact Material
B Gold

Terminal Seal
E Epoxy

Cap Symbol
000 Painted black over white without symbol*
001 Plus
002 Locked
003 Engine stop
004 Park brake release
005 Engine start
006 Fast
007 Slow
008 Unlocked
009 Rock shaft lower
010 Minus

* cap painted black over white to allow customer laser etching

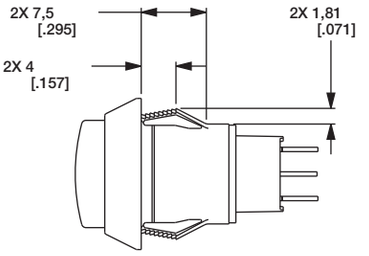

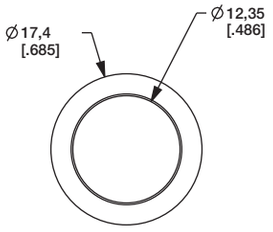

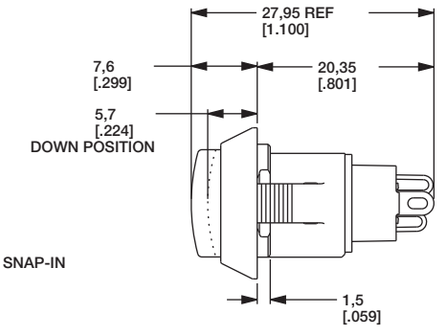

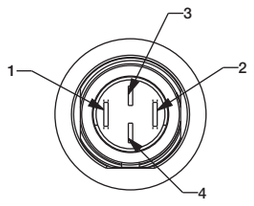

SEE SCHEMATIC

THREADED

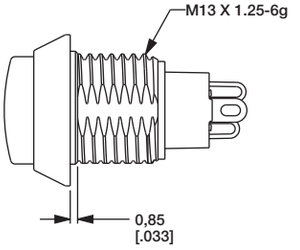

ELECTRICAL SCHEMATIC

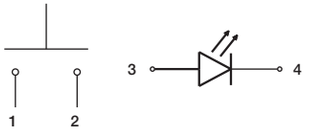

SPST-NO-DB

PANEL CUTOUT

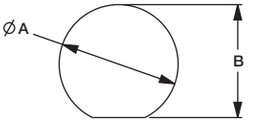

PANEL THICKNESS	DIM A (±0.05 MM)	DIM B (±0.05 MM)
1 MM [0.039 IN]	13.70 MM [0.539 IN]	13.00 MM [0.512 IN]
2 MM [0.079 IN]	13.80 MM [0.539 IN]	13.00 MM [0.512 IN]
3 MM [0.118 IN]	13.90 MM [0.547 IN]	13.10 MM [0.516 IN]
THREADED BODY MIN PANEL THICKNESS 1 MM	13.70 MM [0.539 IN]	13.00 MM [0.512 IN]

A 0.1 MM MIN CHAMFER ON THE LEADING EDGE OF MOUNTING HOLE IS RECOMMENDED FOR SNAP-IN VERSION.

Third Angle Projection

Dimensions are shown: Inches (mm)
Specifications and dimensions subject to change

APB Series
Backlit Pushbutton Switch

TERMINATION

W 12" WIRE LEADS

Z SOLDER LUG

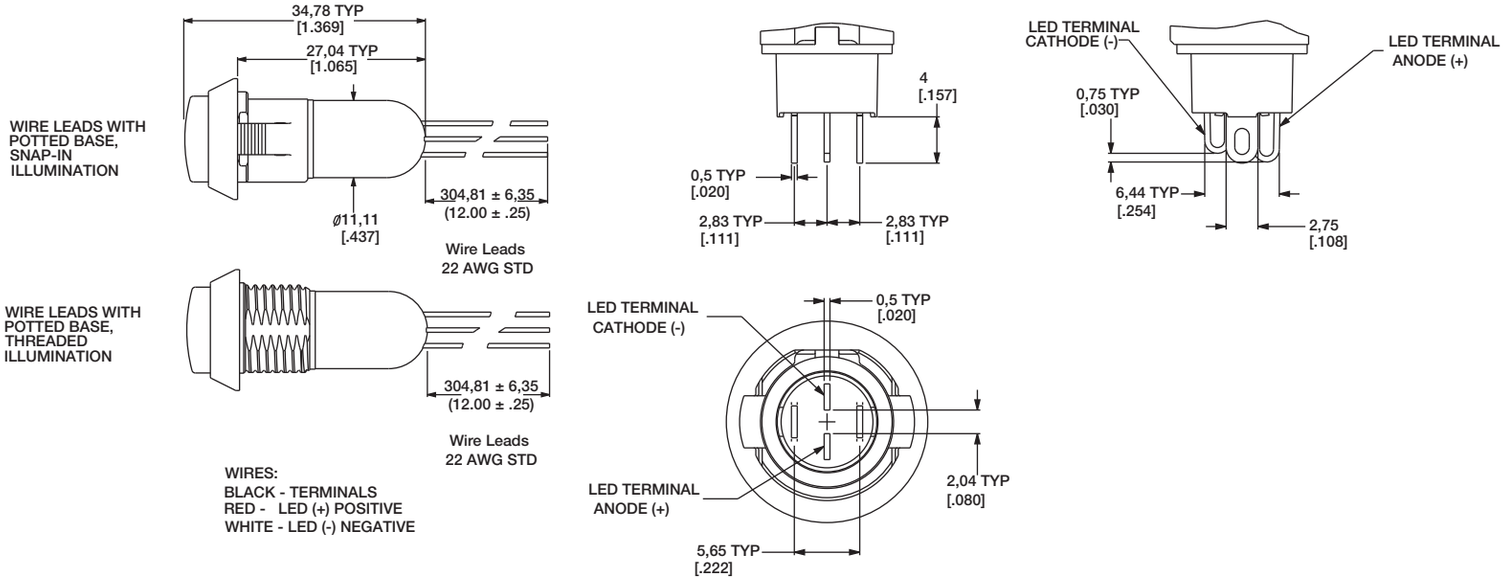

CONTACT MATERIAL

B GOLD

OPTION CODE	CONTACT MATERIAL
B	Gold

TERMINAL SEAL

E EPOXY

All models are epoxy sealed

Third Angle Projection

Dimensions are shown: Inches (mm)
Specifications and dimensions subject to change

CAP SYMBOLS

-000		NO SYMBOL
-001		PLUS
-002		LOCKED
-003	STOP	ENGINE STOP
-004		PARK BRAKE RELEASE
-005		ENGINE START
-006		FAST
-007		SLOW
-008		UNLOCKED
-009		ROCK SHAFT LOWER
-010		MINUS

NOTES:
1. ALL GRAPHICS MUST BE POSITIONED AS SHOWN, PERPENDICULAR TO ALIGNMENT FEATURE ON UNDERSIDE OF CAP.
2. GRAPHIC MARKING MUST BE ALIGNED WITH THE FLAT FEATURE ON THE UNDERSIDE OF THE CAP AS SHOWN, TOLERANCE ±3°

PANEL CUTOUT

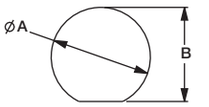

Panel Orientation
Flat indicates bottom

See chart on previous page for dimensions

HARDWARE

LOCK WASHER
Part Number 647D00000

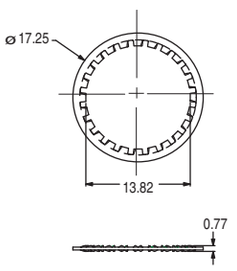

HEX NUT
Part number 515D00000

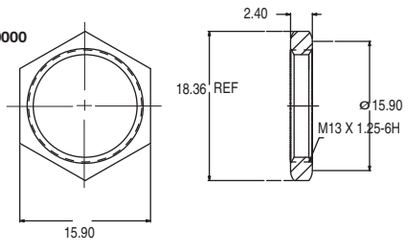

PANEL SEAL
Part Number 655D00000

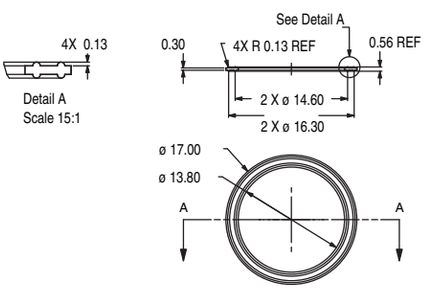

Third Angle Projection

Dimensions are shown: Inches (mm)
Specifications and dimensions subject to change

HP Series
Hall Effect Pushbutton Switch

Features/Benefits

- ***IP68 sealed***
- ***10,000,000 life cycle***
- ***Multiple colored caps***
- ***Redundant output available***

Typical Applications

- ***Harsh environments***
- ***Off-Road***
- ***Industrial***
- ***Medical***
- ***Transportation***
- ***Joystick control modules***
- ***Gaming***
- ***Military***

Specifications

FUNCTION: Linear output (See chart on next page)
MOUNTING TYPE: Front mount, Rear mount

Mechanical

MECHANICAL TRAVEL: 0.150 (3.81mm)
SHOCK: 60g 11ms sawtooth wave
VIBRATION: 10-500Hz 10g max.

Electrical

SUPPLY VOLTAGE: 5 ± 0.5 VDC
SUPPLY CURRENT: 10mA max.
OUTPUT CURRENT: 1mA max.
OUTPUT VOLTAGE: Programable from 0.5 -4.5V
ESD PROTECTION: 16kV per EIA-545

Materials

CASE / BUSHING: Anodized Aluminum
INSIDE HOUSING: PBT
CAP: PBT
ACTUATOR: PBT

Operating Environment

OPERATING TEMPERATURE: -40˚C to 85˚C
OPERATING LIFE: 10,000,000 cycles
SEALING: IP68S

NOTE: Specifications and materials listed above are for switches with standard options. For information on specific and custom switches, please contact Customer Service.

Build-A-Switch

To order, simply select desired option from each category and place in the appropriate box.

H P — ☐ — ☐ — ☐ — ☐ — ☐ — ☐ — ☐ — ☐ — ☐

Designation
HP HP Series

Bushing / Mounting Style
1 Front mount, 5/8-24 thread
2 Rear mount, 5/8-24 thread
3 Rear mount, 15/32-32 thread

Cap Style
1 ø .625 Dome (front mount only)
2 ø .370 Flat

Sensor Configuration
S Single Output
D Dual Output, Output 2 mirrors Output 1 (see figure 1)

Output Voltage Code
1 V1= 1.0V, V2= 4.0V
2 V1= 4.0V, V2= 1.0V
3 V1= 0.5V, V2= 4.5V
4 V1= 4.5V, V2= 0.5V

Actuation Force
S 2.7lb (12N)

Termination Style
W 12" wire leads, 22 AWG XLPE (26 AWG for Dual Output)

Cap Color
1 White
2 Black (STD)
3 Red
4 Orange
5 Yellow

Bushing Finish
1 Clear anodize
2 Black anodize (STD)

Hardware
0 No hardware
1 Plated hardware (STD)
2 Stainless hardware

Please contact Customer Service for additional options.

STANDARD VIEW

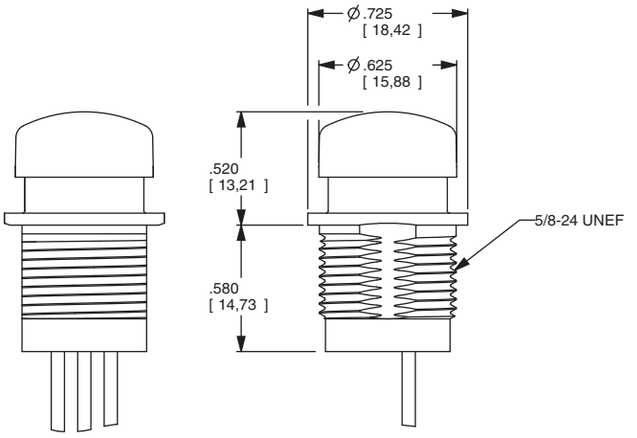

HP11

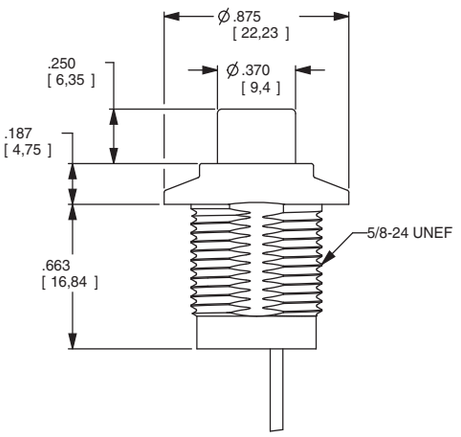

HP12

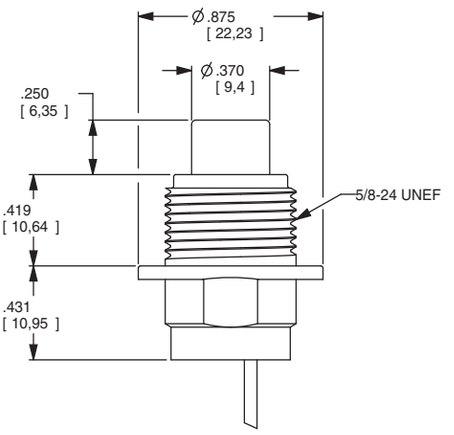

HP22

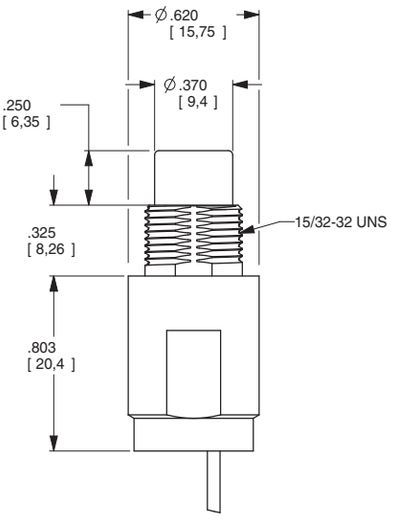

HP32

FIGURE 1: OUTPUT VOLTAGE

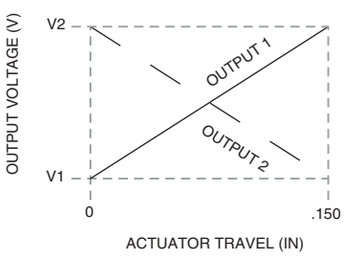

FIGURE 2- SCHEMATIC

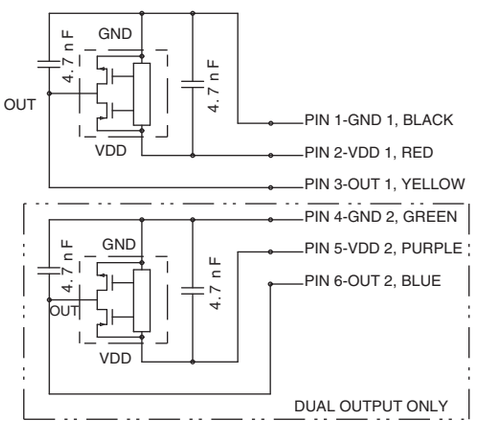

Third Angle Projection

Dimensions are shown: Inches (mm)
Specifications and dimensions subject to change

NP Series
Sealed Industrial Pushbutton Switch

Features/Benefits

- ***IP68 sealed***
- ***1,000,000 life cycle***
- ***Multiple housing styles***
- ***Capable of up to 5A resistive load***
- ***Wirelead options available***
- ***RoHS compliant***

Typical Applications

- ***Harsh environments***
- ***Off-Road***
- ***Industrial***
- ***Transportation***
- ***Military***

Specifications

FUNCTION: SPDT Double Break (Form Z) Momentary
CONTACT ARRANGEMENT: N.O. and N.C.
MOUNTING TYPE: Threaded front or rear mount and slot mount
TORQUE SPEC FOR THREADED BODY: Do not exceed 50 in-lbs (5.65 N-m)

Mechanical

OPERATING LIFE: 1,000,000 cycles
TOTAL TRAVEL: 1.6 ± 0.15 mm
OPERATING POINT 0.9 ± 0.25 mm
OVER TRAVEL: 0.45 min.
OPERATING FORCE: 8N ± 1.5N
VIBRATION: 10-500 Hz 10g Max
SHOCK: 50g 11ms sawtooth wave

Electrical

CONTACT RATING:
Option G - Gold over Silver
10mA/5 VDC (1,000,000 cycles)
Option Q - Silver
1A/32 VDC resistive (100,000 cycles)
5A/32 VDC resistive (25,000 cycles)
3A/32 VDC resistive (25,000 cycles)

Electrical (cont.)

DIELECTRIC STRENGTH: 1000 V AC for 1 min.
INSULATION RESISTANCE: 1 G Ω @ 500 VDC
INITIAL CONTACT RESISTANCE 50 mΩ max (without wire leads)
BOUNCE TIME: <5 ms

Materials

HOUSING: 6061-T6 Aluminum, black or clear anodized
BASE: PBT
CAP: PBT
ACTUATOR: PBT
INTERNAL SEAL: Silicone rubber
TERMINALS: Copper with silver nickel inlay, silver plating
MOVABLE CONTACT: Copper alloy, gold over silver plating
TERMINAL SEAL: Epoxy

Operating Environment

OPERATING TEMPERATURE: -40˚C to +85˚C
ESD PROTECTION: 15KV min.

Process Environment

SEALING: IP68

NOTE: Specifications and materials listed above are for switches with standard options. For information on specific and custom switches, please contact Customer Service.

Build-A-Switch

To order, simply select desired option from each category and place in the appropriate box.

N P — 8 — ☐ — ☐ — ☐ — ☐ — ☐ — ☐ — E

Designation
NP NP Series

Operating Force
8 8 Newtons

Actuator Style
S Standard
E Extended (D housing style only)

Actuator Color*
2 Black (STD)
3 Red
4 Orange
5 Yellow
9 Gray

* Please contact Customer Service for additional colors.

Housing Style
T Standard threaded mount
L Long threaded mount
H Short threaded mount
S Slot mount
R Rear mount
D Dome bezel
P Tapered bezel

Housing Anodizing Color
1 Clear anodized
2 Black anodized (STD)

Termination
03 Solder Lug (STD)
02 PC Pin (G Contact Material)
W4 4x 12" 22 AWG UL1569 wire (overmolded)
W3 3x 12" 22 AWG UL1569 wire (overmolded)

Contact Material
Q Silver (STD)
G Gold over silver

Terminal Seal
E Epoxy
All models are epoxy sealed

STANDARD VIEW

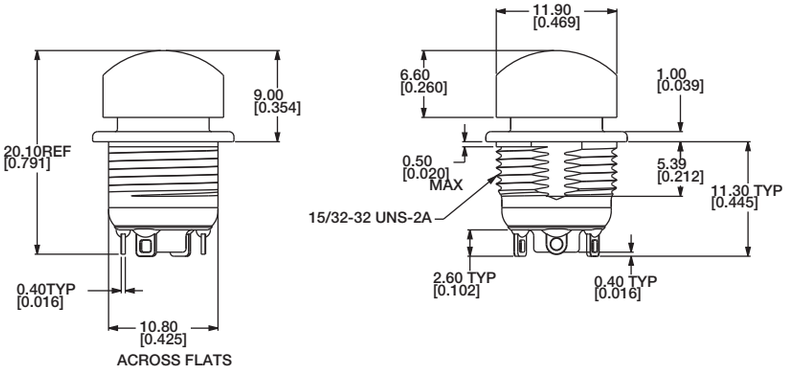

ELECTRICAL SCHEMATIC

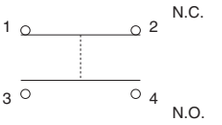

OPERATING FORCE

OPTION CODE	OPERATING FORCE
8	8 N

ACTUATOR STYLE

S STANDARD

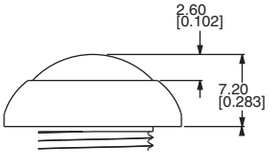

E EXTENDED (D HOUSING STYLE ONLY)

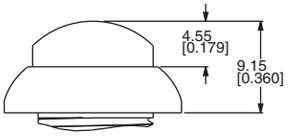

ACTUATOR COLOR

OPTION CODE	ACTUATOR COLOR
2	Black
3	Red
4	Orange
5	Yellow
9	Gray

For additional colors please contact Customer Service.

Third Angle Projection

Dimensions are shown: mm (inches)
Specifications and dimensions subject to change

NP Series
Sealed Industrial Pushbutton Switch

HOUSING STYLE

T STANDARD THREADED MOUNT

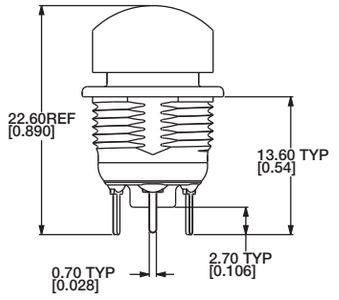

PC TERMINALS

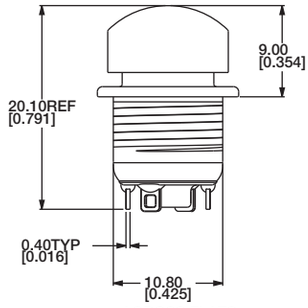

ACROSS FLATS

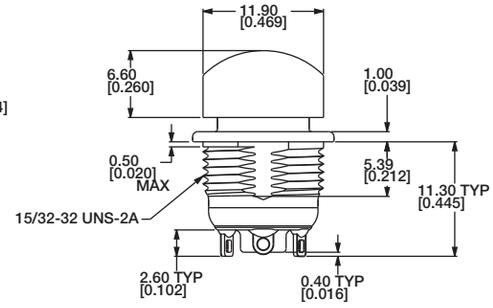

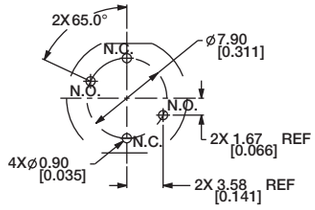

PC HOLE PATTERN
BOARD VIEW

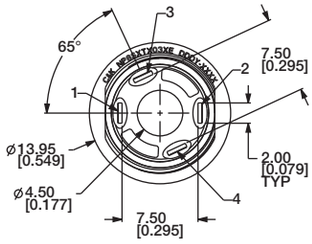

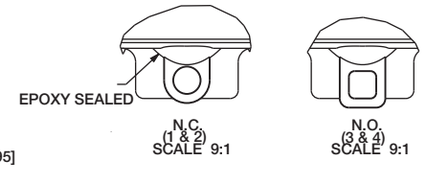

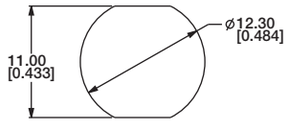

PANEL CUTOUT

L LONG THREADED MOUNT

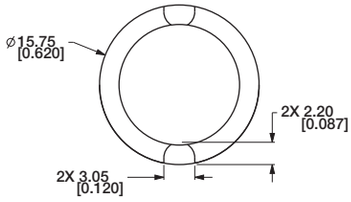

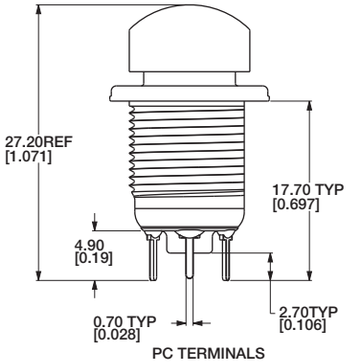

PC TERMINALS

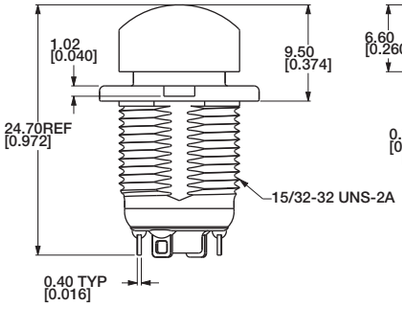

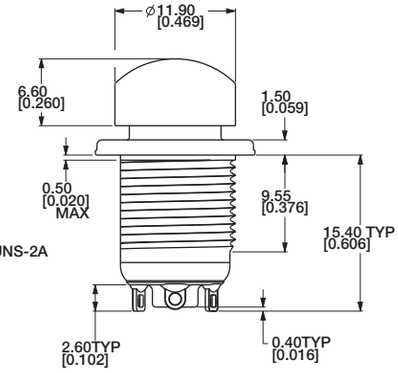

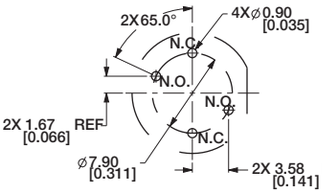

PC HOLE PATTERN
BOARD VIEW

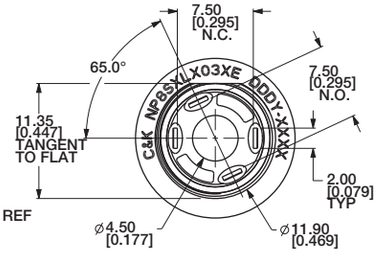

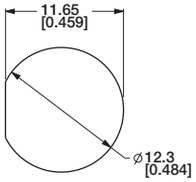

PANEL CUTOUT

Third Angle
Projection

Dimensions are shown: mm (inches)
Specifications and dimensions subject to change

HOUSING STYLE

H SHORT THREADED MOUNT

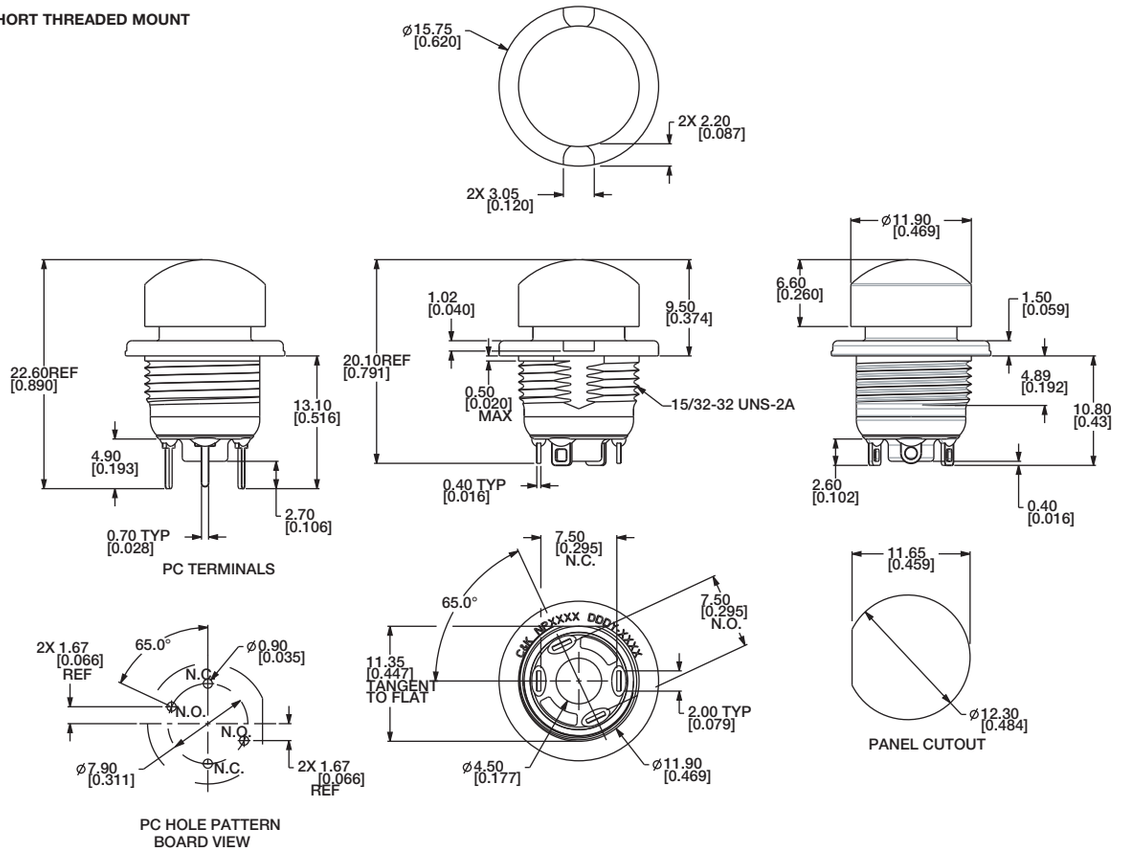

S SLOT MOUNT

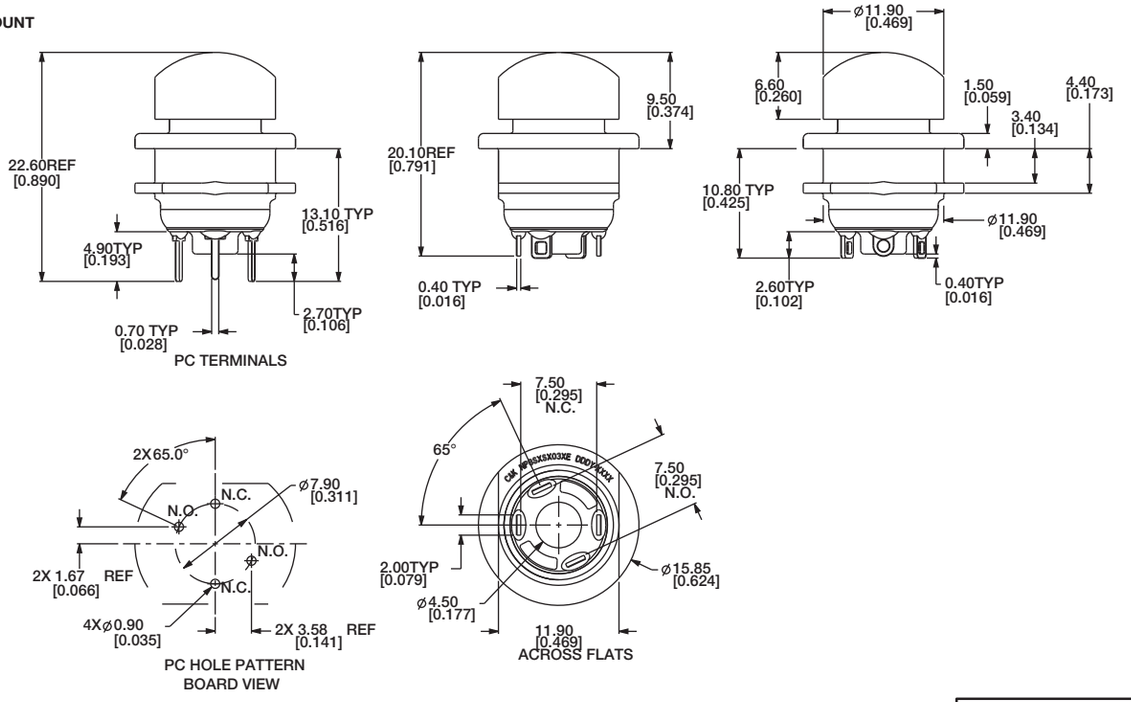

Third Angle
Projection

Dimensions are shown: mm (inches)
Specifications and dimensions subject to change

NP Series
Sealed Industrial Pushbutton Switch

HOUSING STYLE

R REAR MOUNT

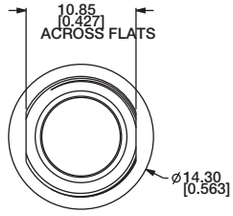

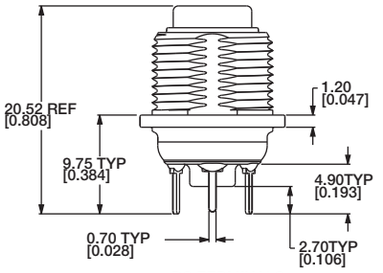

PC TERMINALS

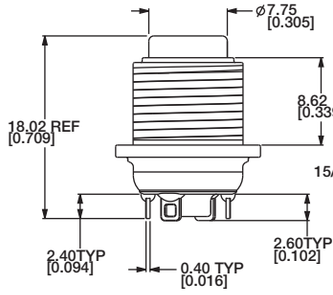

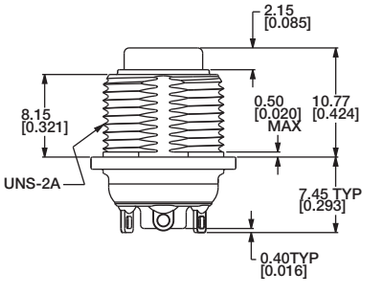

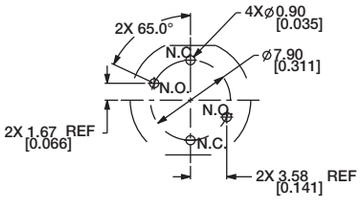

PC HOLE PATTERN
BOARD VIEW

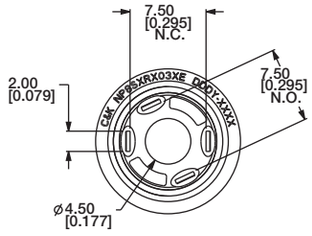

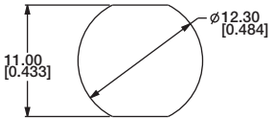

PANEL CUTOUT

D DOME BEZEL

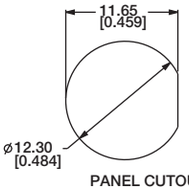

PANEL CUTOUT

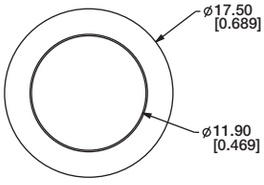

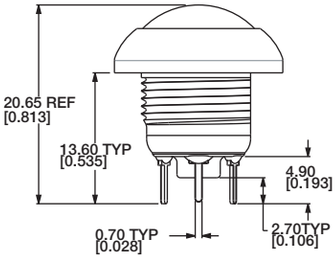

PC TERMINALS

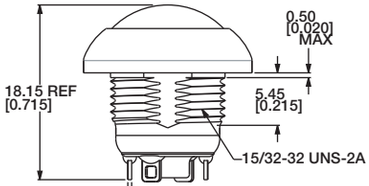

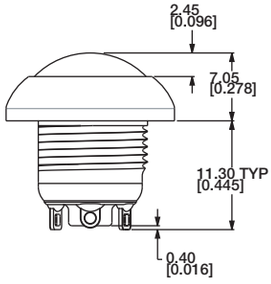

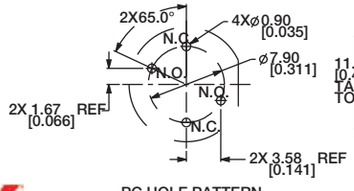

PC HOLE PATTERN
BOARD VIEW

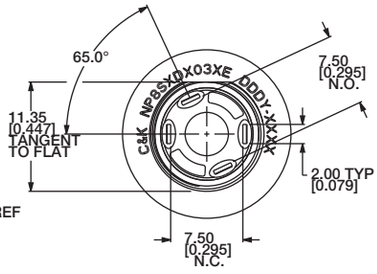

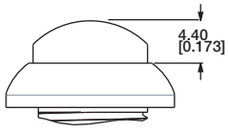

EXTENDED CAP

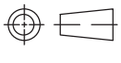

Third Angle
Projection

Dimensions are shown: Inches (mm)
Specifications and dimensions subject to change

HOUSING STYLE

P TAPERED BEZEL

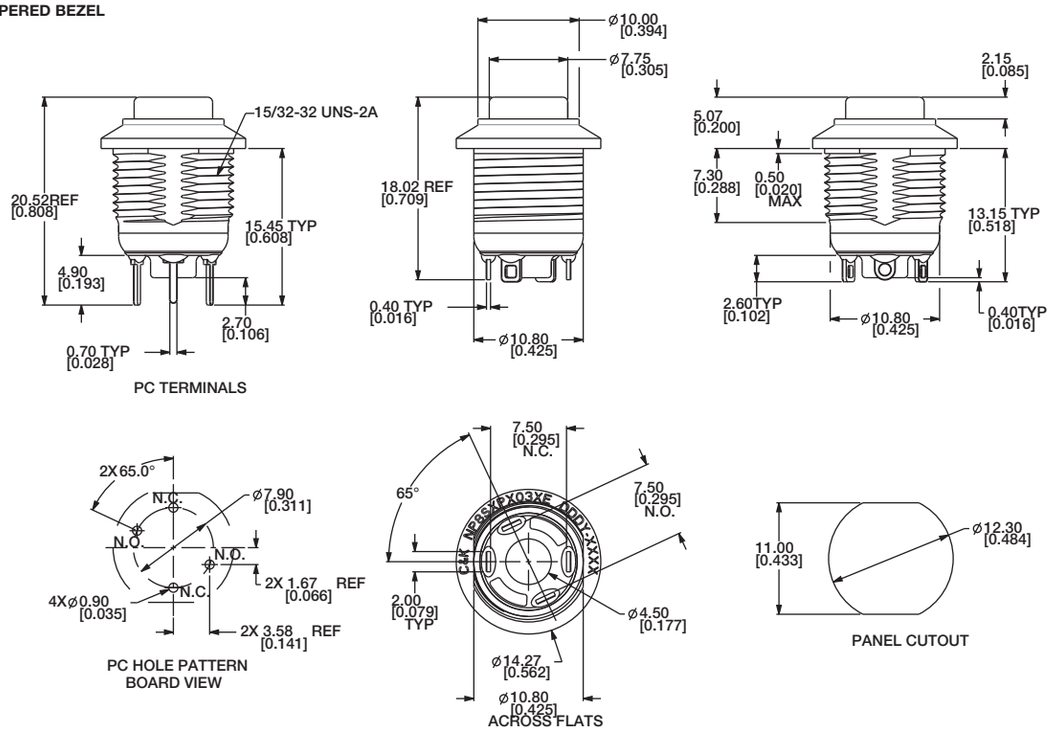

HOUSING ANODIZING COLOR

OPTION CODE	ANODIZING COLOR
1	Clear anodized
2	Black anodized (STD)

TERMINATION

03 SOLDER LUG (STD)

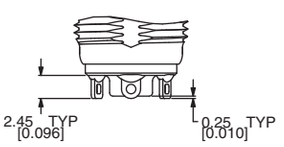

02 PC PIN (G CONTACT MATERIAL)

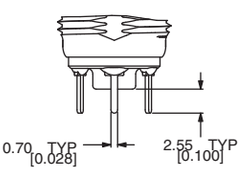

Third Angle Projection

Dimensions are shown: Inches (mm)
Specifications and dimensions subject to change

NP Series
Sealed Industrial Pushbutton Switch

TERMINATION

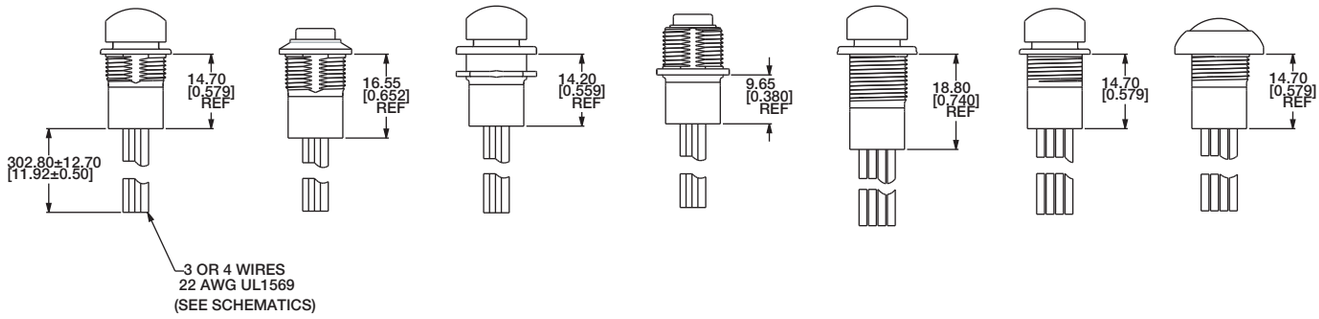

W3 3X 12" 22 AWG UL1569 WIRE (OVERMOLDED)

W4 4X 12" 22 AWG UL1569 WIRE (OVERMOLDED)

ELECTRICAL SCHEMATIC - 3 WIRES

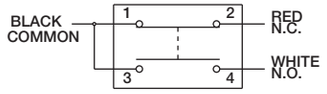

ELECTRICAL SCHEMATIC - 4 WIRES

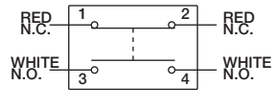

CONTACT MATERIAL

OPTION CODE	CONTACT MATERIAL
Q	Silver (STD)
G	Gold over Silver

TERMINAL SEAL

E EPOXY

All models are epoxy sealed

HARDWARE

HEX NUT

707100201 Nickel-plated

LOCKWASHER

700302202

PANEL GASKET

851D02000

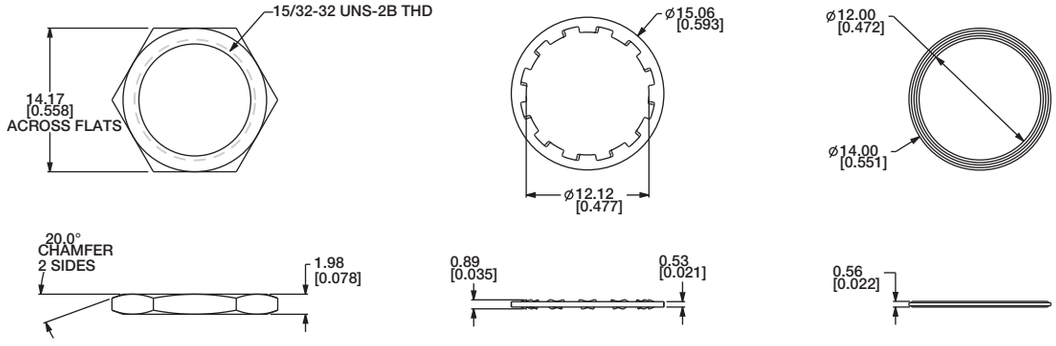

Third Angle Projection

Dimensions are shown: mm (inches)
Specifications and dimensions subject to change

PBA Series
Illuminated Pushbutton

Features/Benefits

- ***Illuminated display***
- ***Small size***
- ***Cold lighting***
- ***Tactile feed back***

Typical Applications

- ***Avionics***

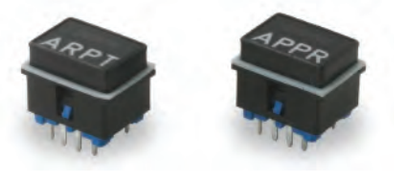

Mechanical

ACTUATION FORCE: 5,5 N ± 0,5 N
MAXIMUM FORCE: 80 N
TRAVEL TO CONTACT: 1,2 ± 0,1 mm
OVERTRAVEL: >0,3 mm
TOTAL TRAVEL: 1,5 ± 0,1 mm
LIFE EXPECTANCY: 10^6 operations 28 V - 10 mA
WEIGHT: 2 grams
VIBRATION: ± 0,45mm from 33 Hz to 75 Hz
ACCELERATION: 10 g max

Electrical

CONTACTS: Gold plated
VOLTAGE: Max 100 V - Min 20 mV DC
CARRYING CURRENT: Max 250 mA - Min 50 µA
SWITCHING CURRENT: Max 50 mA - Min 50 µA
MAX SWITCHING POWER: 1 W
CONTACT RESISTANCE: < 50 Ω
DIELECTRIC STRENGTH: 500 V rms
INSULATION RESISTANCE (100 V): > 5000 M Ω
BOUNCE: < 3 ms
SWITCHING OF 2 POLES MATCHING: < 10 ms

Environmental Data

STORAGE TEMPERATURE: -55˚C TO 85˚C
OPERATING TEMPERATURE: -30˚C TO 85˚C
TEMPERATURE OF KEY TO CAP: < Ambiant +25˚C
HUMIDITY TEST: 21 days (-40˚C - 93% HR)
ALTITUDE PRESSURE: From 20 hPa to 1070 hPa

Soldering Data

WAVE SOLDERING: 260˚C / 5s
MANUAL SOLDERING: 350˚C / 2s
SEALING: According to IP64

Plastic Material

Housing and Cap: UL-94 V0

NOTE: Specifications and materials listed above are for switches with standard options. For information on specific and custom switches, please contact Customer Service.

Build-A-Switch

To order, simply select desired option from each category and place in the appropriate box.

P B A — [ ] — [ ] — [ ] — [ ] — [ ] — Repeat sequence for 2nd Marking — [ ] [ ]

Designation
PBA PBA Series

Size
1 9,5 x 14
2 11,5 x 14
3 14 x 14

Marking Location
H High
M Middle
L Low

Type of Marking
T Text / Legend
S Status Indicator

LED Color
0 White λ
1 Green λ 560 nm
2 Yellow Green λ 568 nm
3 Amber λ 590 nm
4 Red λ 660 nm
5 Other λ

Display Type

		LED Non-Illuminated	LED Illuminated
N	Text Marking	White	LED Color
	Background	Black	Black
S	Text Marking	Not visible	LED Color
	Background	Black	Black
R	Text Marking	White	LED Color
	Background	Red	Red
G	Text Marking	Green	Green
	Background	Black	Black

LED Supply or Type
AC Alternative
DC Direct
XX for each marking
1:6 LEDs in parallel
for direct current

Dimensions are shown: mm (inches)
Specifications and dimensions subject to change

PBA Series
Illuminated Pushbutton

LIGHTING DATA

The legends of function and the status indicator can be illuminated separately.

Color		Amber	Green
Wave Length		586 < λ < 592	555 < l < 560
Current Max		80 mA	80 mA
Chromaticity	X Y	0,54 < X < 0,58 0,40 < Y < 0,44	0,30 < X < 0,40 0,6 < Y
Contrast Min.		1,2	0,85

For other colors and displays, please contact Customer Service.

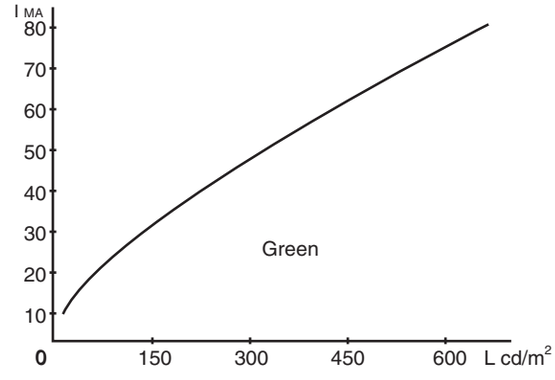

LIGHTING / CURRENT

DIMENSIONS (applicable for any size)

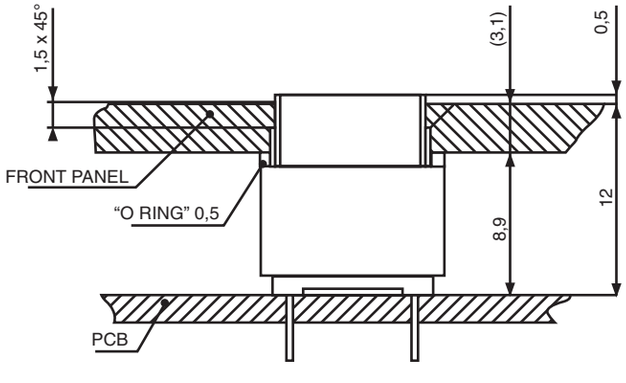

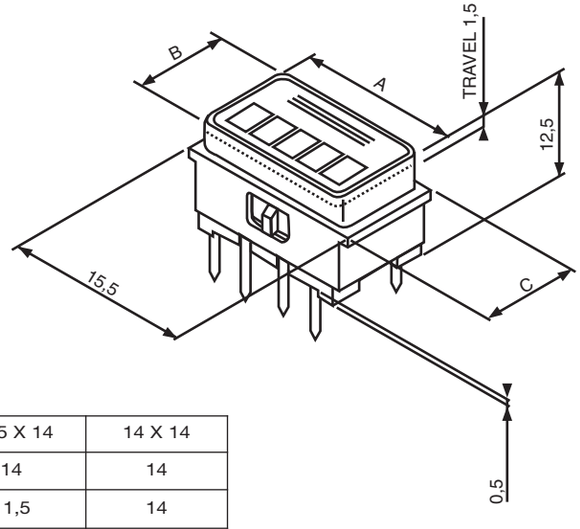

	9,5 X 14	11,5 X 14	14 X 14
A	14	14	14
B	9,5	11,5	14
C	11	11,5	15,5

Tolerance: ± 0,1 mm

Dimensions are shown: mm
Specifications and dimensions subject to change

LED MODULE LAYOUT

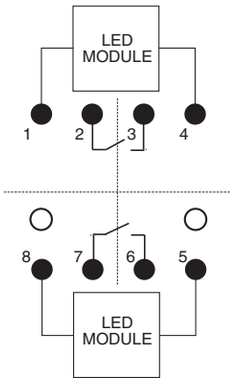

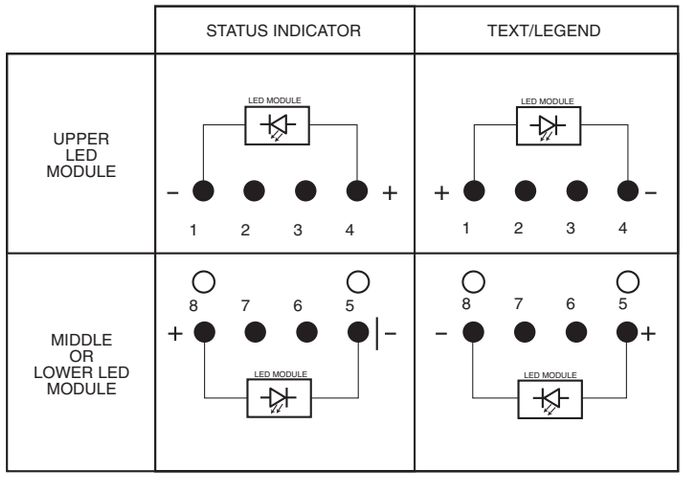

PCB Layout

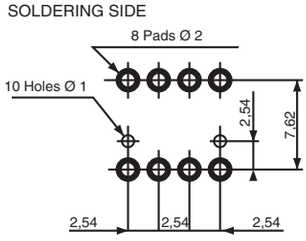

TOLERANCE: ± 0,1

APPLICABLE FOR SIZE
- 9,5 x 14 mm
- 11,5 x 14 mm

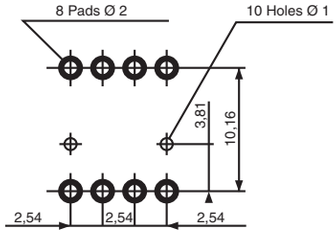

APPLICABLE FOR SIZE
-14 x 14 mm

TACTILE EFFECT

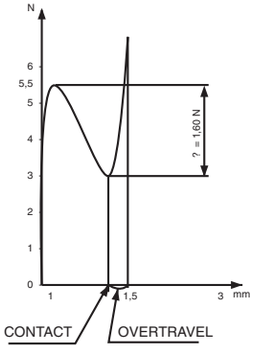

TRAVEL
- TRAVEL TO CONTACT: 1,2 ± 0,1 mm
- OVERTRAVEL: > 0,3 mm
- TOTAL TRAVEL: 1,5 ± 0,1 mm

FORCE
- ACTUATOR FORCE: 5,5 N ± 0,5 N
- TACTILE FEELING: 1,6 N

1 or 2 markings are available in any combination of text / legend or status indicator.

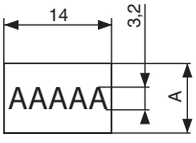

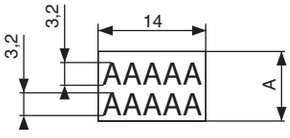

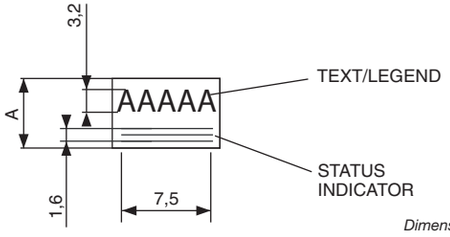

A = 9,5 or 11,5 or 14mm

Dimensions are shown: mm
Specifications and dimensions subject to change

PB Series
Single Pole and Multi-Key Pushbutton Switches

Features/Benefits

- ***Momentary or latching options***
- ***Reliable contact design***
- ***2, 4, and 6 pole configurations***
- ***Long travel and extended life cycles***

Typical Applications

- ***Appliances***
- ***Audio and visual equipment***
- ***Consumer electronics***
- ***Industrial equipment***

Specifications

CONTACT RATING: 0.3A @ 30 VDC

INITIAL CONTACT RESISTANCE: 30 m ohms max.

INSULATION RESISTANCE: 100 M ohms min.

DIELECTRIC STRENGTH: 500 V AC (50-60 Hz) between open terminals and between the frame and terminal.

OPERATING LIFE: 10,000 cycles without load

OPERATING FORCE:
250 ± 100 gf (2.45 ± 0.98N)

LOCK TRAVEL: 2 ± 0.3 mm

TOTAL TRAVEL: 3 ± 0.3 mm

OPERATING TEMPERATURE: -20˚C to 70˚C

Materials

CASE: PC (UL 94HB)

PLASTIC CLIP: POM (UL 94HB)

SPRING: SUS

KNOB: POM

TERMINAL: Silver plated

PB-22D01-L 2PDT LOCK / LATCHING

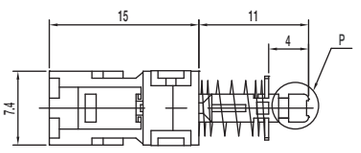

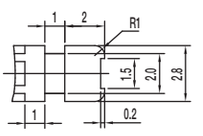

P DETAIL 2 : 1

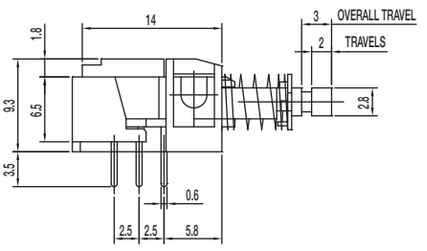

2P — 2T

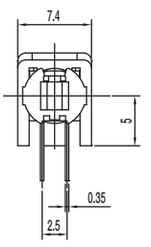

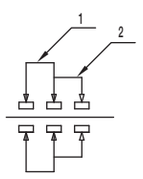

SCHEMATIC

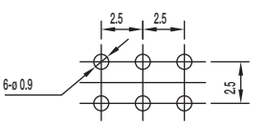

PIERCING PLAN

PB Series
Single Pole and Multi-Key Pushbutton Switches

PB-42D01-L 4PDT LOCK / LATCHING

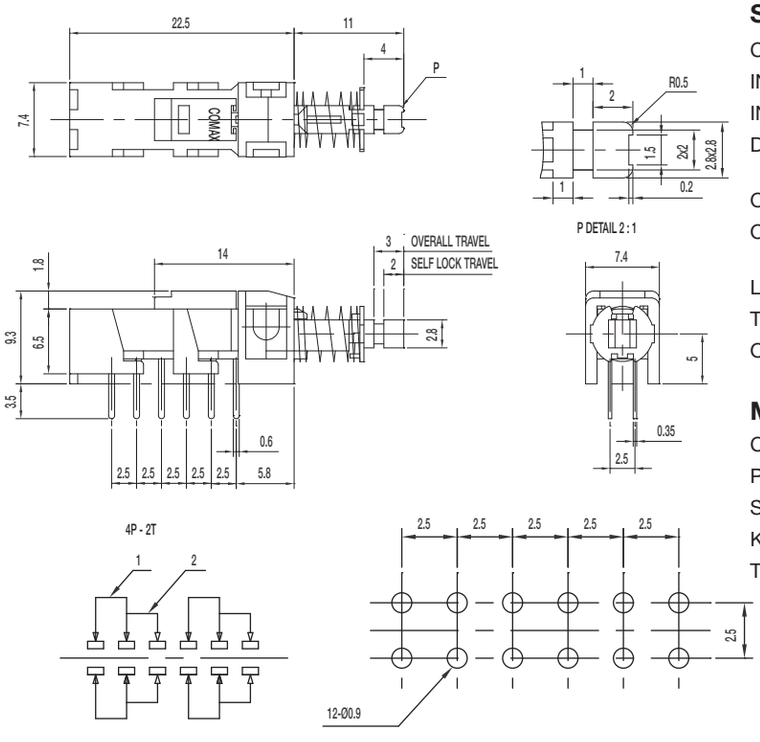

Specifications

CONTACT RATING: 0.3A @ 30 VDC

INITIAL CONTACT RESISTANCE: 30 m ohms max.

INSULATION RESISTANCE: 100 M ohms min.

DIELECTRIC STRENGTH: 500 V AC (50-60 Hz) between open terminals and between the frame and terminal.

OPERATING LIFE: 10,000 cycles without load

OPERATING FORCE:
280 ± 100 gf

LOCK TRAVEL: 2 ± 0.3 mm

TOTAL TRAVEL: 3 ± 0.3 mm

OPERATING TEMPERATURE: -20˚C to 70˚C

Materials

CASE: PC (UL 94HB)

PLASTIC CLIP: POM (UL 94HB)

SPRING: SUS

KNOB: POM

TERMINAL: Silver plated

PB-62D01-L 6PDT LOCK / LATCHING

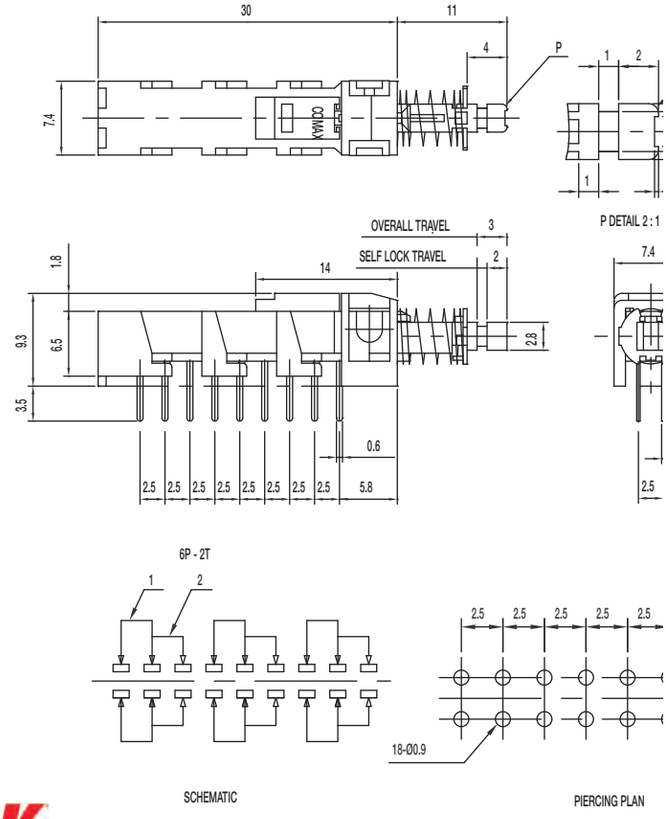

Specifications

CONTACT RATING: 0.3A @ 30 VDC

INITIAL CONTACT RESISTANCE: 30 m ohms max.

INSULATION RESISTANCE: 100 M ohms min.

DIELECTRIC STRENGTH: 500 V AC (50-60 Hz) between open terminals and between the frame and terminal.

OPERATING LIFE: 10,000 cycles without load

OPERATING FORCE:
300 ± 100 gf (2.94 ± 0.98N)

LOCK TRAVEL: 2 ± 0.3 mm

TOTAL TRAVEL: 3 ± 0.3 mm

OPERATING TEMPERATURE: -20˚C to 70˚C

Materials

CASE: PC (UL 94HB)

PLASTIC CLIP: POM (UL 94HB)

SPRING: SUS

KNOB: POM

TERMINAL: Silver plated

Dimensions are shown: mm
Specifications and dimensions subject to change

PB-22D01-F 2PDT NON-LOCK / MOMENTARY

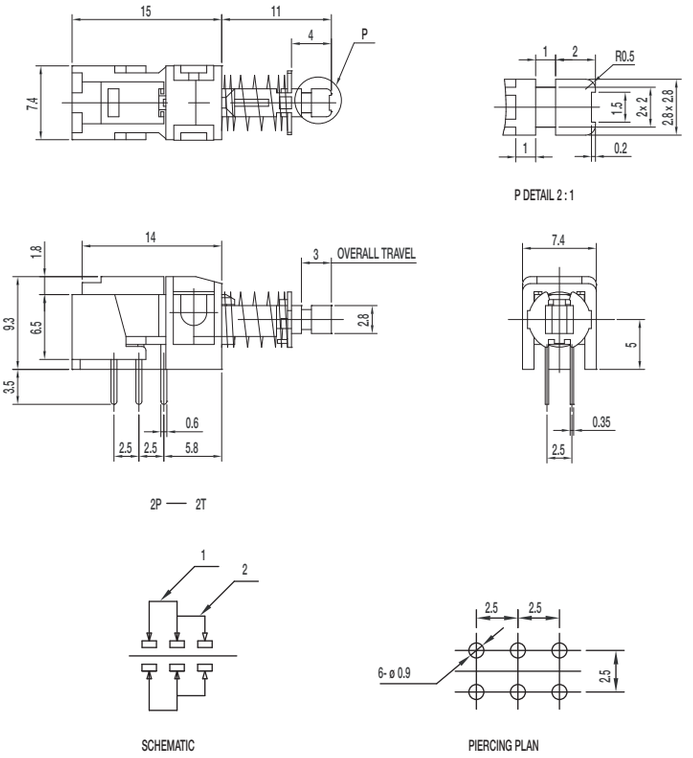

Specifications

CONTACT RATING: 0.3A @ 30 VDC

INITIAL CONTACT RESISTANCE: 30 m ohms max.

INSULATION RESISTANCE: 100 M ohms min.

DIELECTRIC STRENGTH: 500 V AC (50-60 Hz) between open terminals and between the frame and terminal.

OPERATING LIFE: 10,000 cycles without load

OPERATING FORCE:
250 ± 100 gf (2.45 ± 0.98N)

TOTAL TRAVEL: 3 ± 0.3 mm

OPERATING TEMPERATURE: -20˚C to 70˚C

Materials

CASE: PC (UL 94HB)

PLASTIC CLIP: POM (UL 94HB)

SPRING: SUS

KNOB: POM

TERMINAL: Silver plated

PB-42D01-F 4PDT NON-LOCK / MOMENTARY

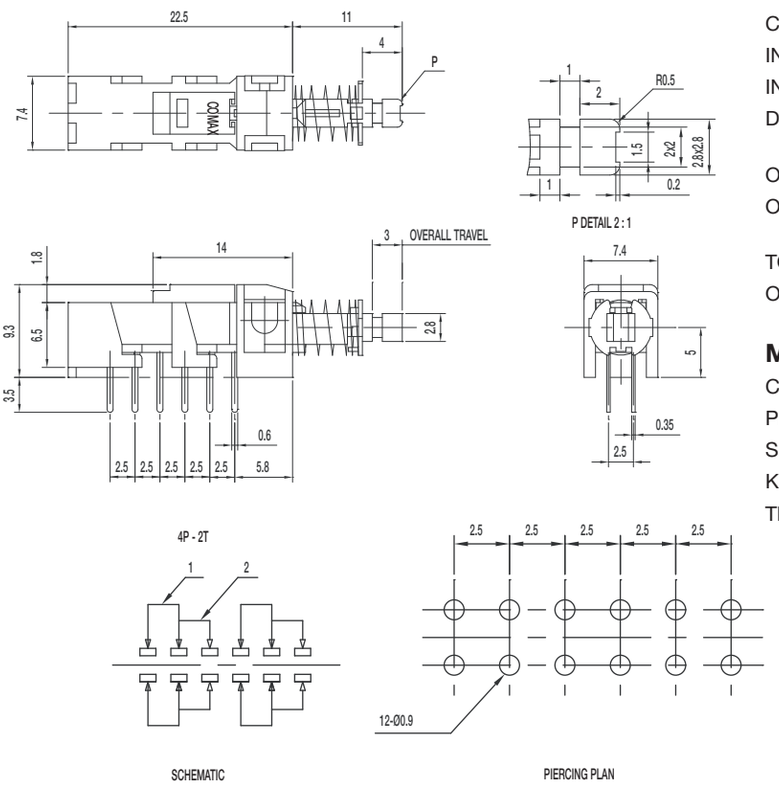

Specifications

CONTACT RATING: 0.3A @ 30 VDC

INITIAL CONTACT RESISTANCE: 30 m ohms max.

INSULATION RESISTANCE: 100 M ohms min.

DIELECTRIC STRENGTH: 500 V AC (50-60 Hz) between open terminals and between the frame and terminal.

OPERATING LIFE: 10,000 cycles without load

OPERATING FORCE:
280 ± 100 gf (2.477 ± 0.98N)

TOTAL TRAVEL: 3 ± 0.3 mm

OPERATING TEMPERATURE: -20˚C to 70˚C

Materials

CASE: PC (UL 94HB)

PLASTIC CLIP: POM (UL 94HB)

SPRING: SUS

KNOB: POM

TERMINAL: Silver plated

PB Series
Single Pole and Multi-Key Pushbutton Switches

PB-62D01-F 6PDT NON-LOCK / MOMENTARY

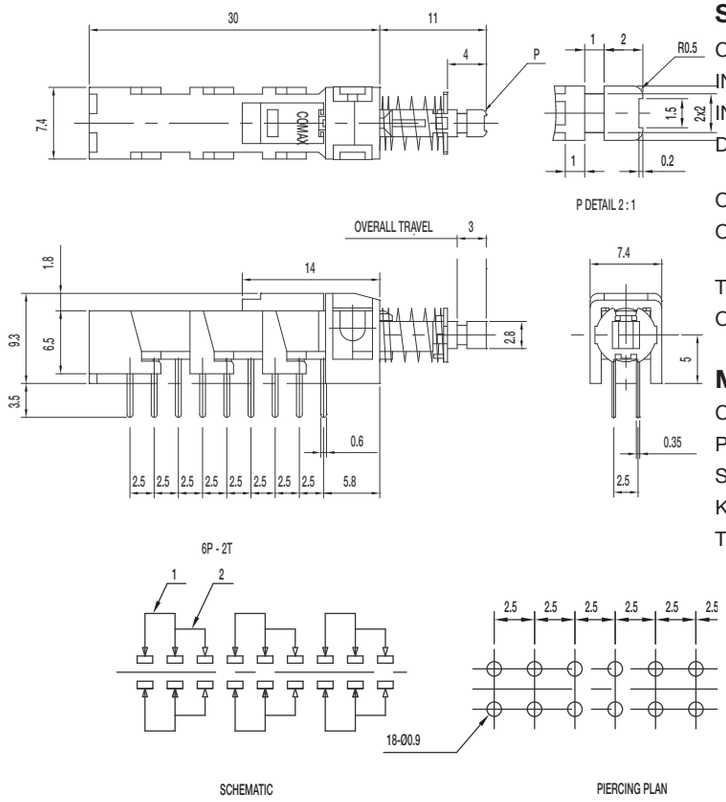

Specifications

CONTACT RATING: 0.3A @ 30 VDC

INITIAL CONTACT RESISTANCE: 30 m ohms max.

INSULATION RESISTANCE: 100 M ohms min.

DIELECTRIC STRENGTH: 500 V AC (50-60 Hz) between open terminals and between the frame and terminal.

OPERATING LIFE: 10,000 cycles without load

OPERATING FORCE:
300 ± 100 gf (2.94 ± 0.98N)

TOTAL TRAVEL: 3 ± 0.3 mm

OPERATING TEMPERATURE: -20˚C to 70˚C

Materials

CASE: PC (UL 94HB)

PLASTIC CLIP: POM (UL 94HB)

SPRING: SUS

KNOB: POM

TERMINAL: Silver plated

PB-22G02-L 2PDT LOCK / LATCHING

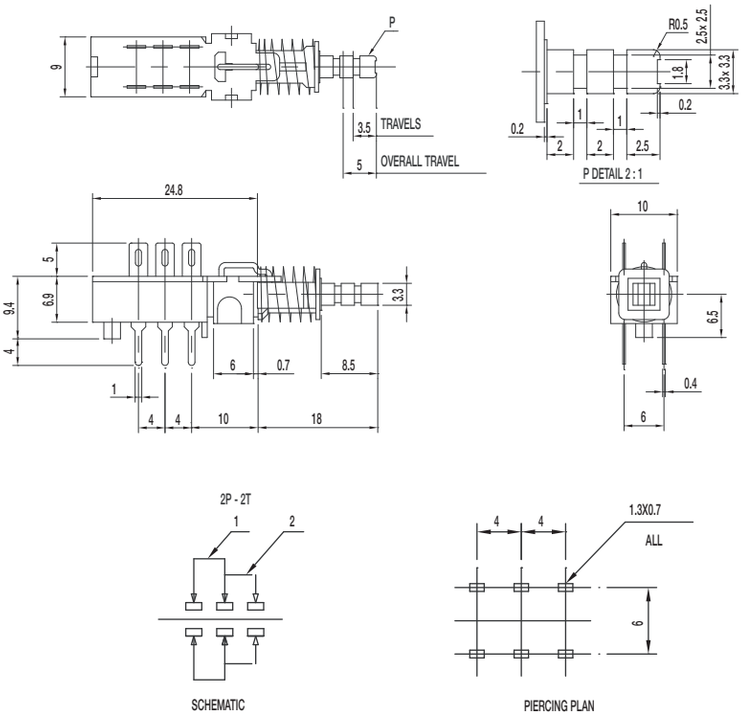

Specifications

CONTACT RATING: 1A @ 25 VDC

INITIAL CONTACT RESISTANCE: 30 m ohms max.

INSULATION RESISTANCE: 100 M ohms min.

DIELECTRIC STRENGTH: 500 V AC (50-60 Hz) between open terminals and between the frame and terminal.

OPERATING LIFE: 10,000 cycles without load

OPERATING FORCE:
350 ± 150 gf (3.43 ± 1.47N)

LOCK TRAVEL: 3.5 ± 0.3mm

TOTAL TRAVEL: 5 ± 0.3 mm

OPERATING TEMPERATURE: -20˚C to 70˚C

Materials

CASE: PC (UL 94HB)

SPRING: SUS

KNOB: POM

TERMINAL: Silver plated

PB-42G02-L 4PDT LOCK / LATCHING

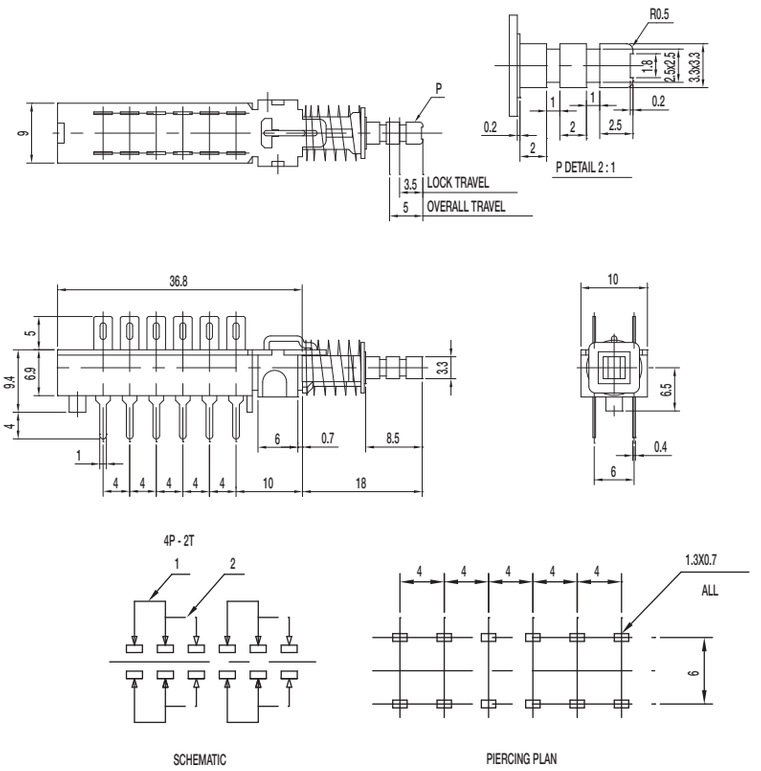

Specifications

CONTACT RATING: 1A @ 25 VDC

INITIAL CONTACT RESISTANCE: 30 m ohms max.

INSULATION RESISTANCE: 100 M ohms min.

DIELECTRIC STRENGTH: 500 V AC (50-60 Hz) between open terminals and between the frame and terminal.

OPERATING LIFE: 10,000 cycles without load

OPERATING FORCE:
400 ± 150 gf (3.92 ± 1.47N)

LOCK TRAVEL: 3.5 ± 0.3mm

TOTAL TRAVEL: 5 ± 0.3 mm

OPERATING TEMPERATURE: -20˚C to 70˚C

Materials

HOUSING: PC (UL 94HB)

SPRING: SUS

KNOB: POM

TERMINAL: Silver plated

PB-62G02-L DPDT LOCK / LATCHING

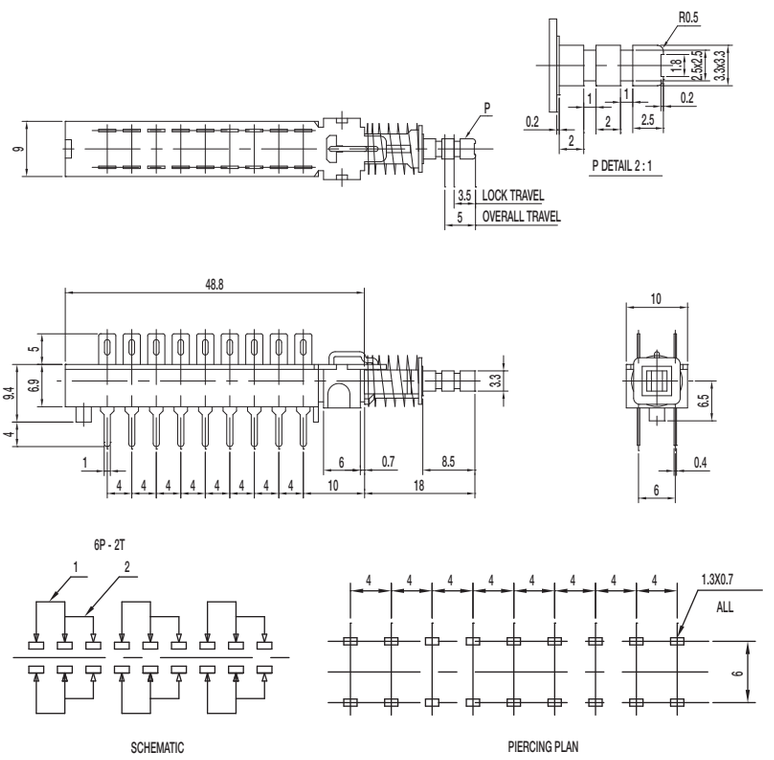

Specifications

CONTACT RATING: 1A @ 25 VDC

INITIAL CONTACT RESISTANCE: 30 m ohms max.

INSULATION RESISTANCE: 100 M ohms min.

DIELECTRIC STRENGTH: 500 V AC (50-60 Hz) between open terminals and between the frame and terminal.

OPERATING LIFE: 10,000 cycles without load

OPERATING FORCE:
450 ± 150 gf

LOCK TRAVEL: 3.5 ± 0.3mm

TOTAL TRAVEL: 5 ± 0.3 mm

OPERATING TEMPERATURE: -20˚C to 70˚C

Materials

HOUSING: PC (UL 94HB)

SPRING: SUS

KNOB: POM

TERMINAL: Silver plated

PB Series
Single Pole and Multi-Key Pushbutton Switches

PB-22G02-F DPDT NON-LOCK / MOMENTARY

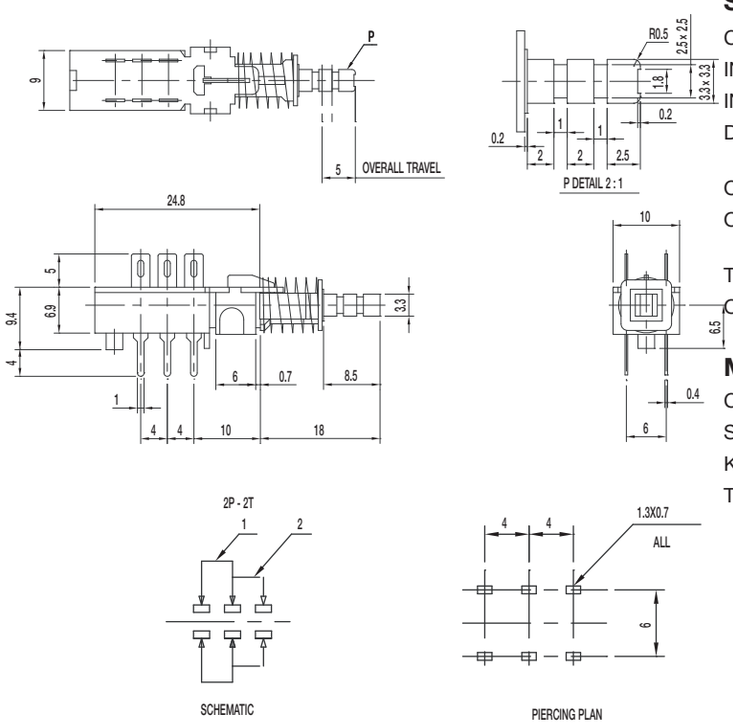

Specifications

CONTACT RATING: 1A @ 25 VDC

INITIAL CONTACT RESISTANCE: 30 m ohms max.

INSULATION RESISTANCE: 100 M ohms min.

DIELECTRIC STRENGTH: 500 V AC (50-60 Hz) between open terminals and between the frame and terminal.

OPERATING LIFE: 10,000 cycles without load

OPERATING FORCE:
350 ± 150 gf (3.43 ± 1.47N)

TOTAL TRAVEL: 5 ± 0.3 mm

OPERATING TEMPERATURE: -20˚C to 70˚C

Materials

CASE: PC (UL 94HB)

SPRING: SUS

KNOB: POM

TERMINAL: Silver plated

PB-42G02-F 4PDT NON-LOCK / MOMENTARY

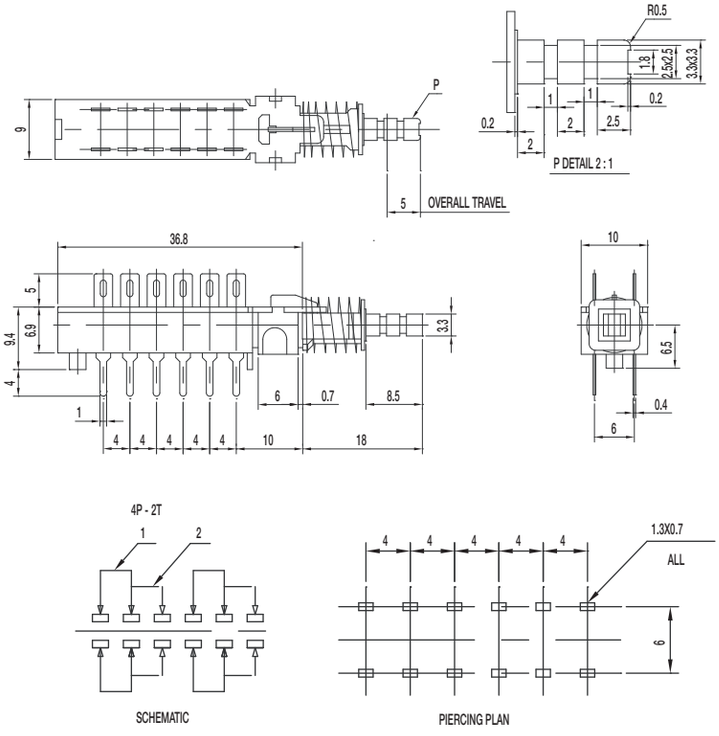

Specifications

CONTACT RATING: 1A @ 25 VDC

INITIAL CONTACT RESISTANCE: 30 m ohms max.

INSULATION RESISTANCE: 100 M ohms min.

DIELECTRIC STRENGTH: 500 V AC (50-60 Hz) between open terminals and between the frame and terminal.

OPERATING LIFE: 10,000 cycles without load

OPERATING FORCE:
400 ± 150 gf (3.92 ± 1.47N)

TOTAL TRAVEL: 5 ± 0.3 mm

OPERATING TEMPERATURE: -20˚C to 70˚C

Materials

HOUSING: PC (UL 94HB)

SPRING: SUS

KNOB: POM

TERMINAL: Silver plated

PB-62G02-F 6PDT NON-LOCK / MOMENTARY

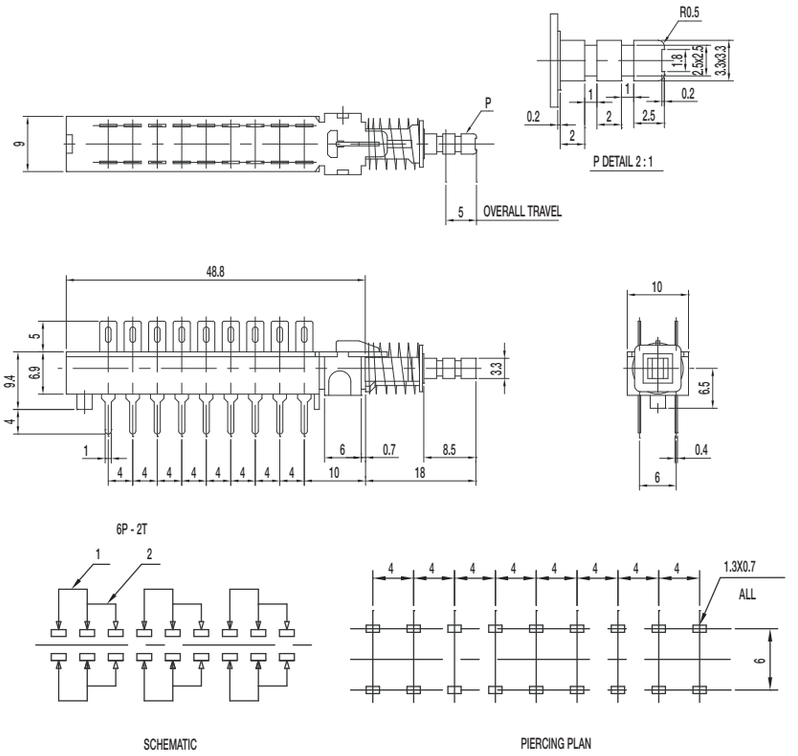

Specifications

CONTACT RATING: 1A @ 25 VDC

INITIAL CONTACT RESISTANCE: 30 m ohms max.

INSULATION RESISTANCE: 100 M ohms min.

DIELECTRIC STRENGTH: 500 V AC (50-60 Hz) between open terminals and between the frame and terminal.

OPERATING LIFE: 10,000 cycles without load

OPERATING FORCE:
450 ± 150 gf (4.41 ± 1.47N)

TOTAL TRAVEL: 5 ± 0.3 mm

OPERATING TEMPERATURE: -20˚C to 70˚C

Materials

HOUSING: PC (UL 94HB)

SPRING: SUS

KNOB: POM

TERMINAL: Silver plated

PB Multi-Key Series

P B — K — — — — — — — —

Key
- **1K** 1K
- **2K** 2K
- **3K** 3K
- **4K** 4K
- **5K** 5K

Travel
- **G** 3.5 mm
- **D** 2 mm

Key Pitch
- **0** 0
- **1** 10
- **2** 12.5
- **3** 15
- **4** 17.5
- **5** 20
- **6** 25
- **7** 30

Mounting Hole
- **A** M3 x 0.5
- **B** 3.2
- **C** No mounting hole

Poles
- **2** 2 poles
- **4** 4 poles
- **6** 6 poles

Operating Type
- **E** Release
- **F** Non-lock
- **L** Self-lock
- **T** Interlock
- **XF** All non-lock
- **XT** All self-lock
- **XL** All interlock

Terminal Shape
- **P**
- **X**
- **N**

Contact Function
- **S** Shorting
- **NS** Non-shorting

Dimensions are shown: mm
Specifications and dimensions subject to change

PB Series
Single Pole and Multi-Key Pushbutton Switches

PB Multi-Key Series

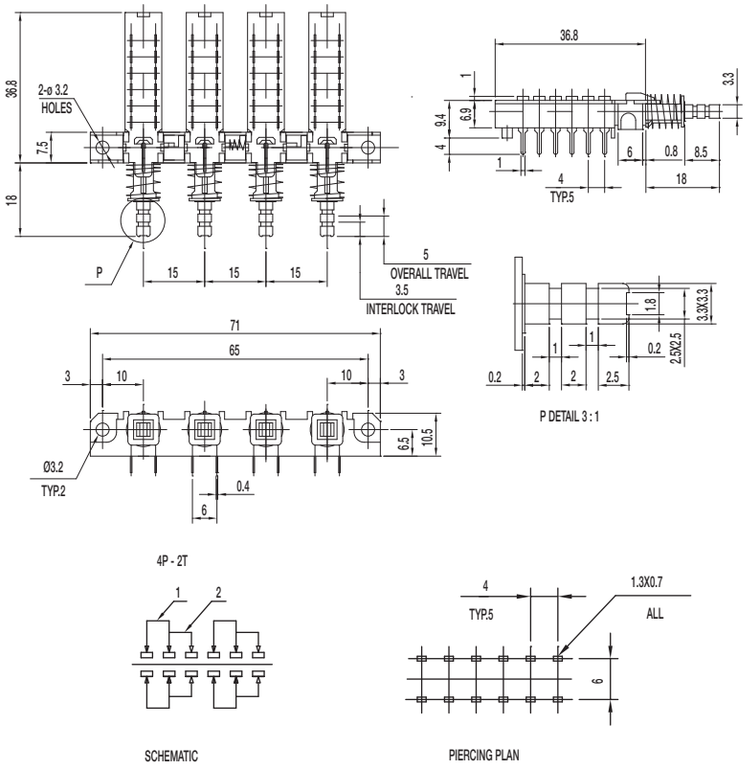

Specifications

CONTACT RATING: 0.3A @ 30 VDC

INITIAL CONTACT RESISTANCE: 30 m ohms max.

INSULATION RESISTANCE: 100 M ohms min.

DIELECTRIC STRENGTH: 500 V AC (50-60 Hz) between open terminals and between the frame and terminal.

OPERATING LIFE: 10,000 cycles without load

OPERATING FORCE:
250 ± 100 gf (2.45 ± 0.98N)

TOTAL TRAVEL: 3 ± 0.3 mm

OPERATING TEMPERATURE: -20˚C to 70˚C

Materials

CASE: PC (UL 94HB)

PLASTIC CLIP: POM (UL 94HB)

SPRING: SUS

KNOB: POM

TERMINAL: Silver plated

PS-12G Series
Pushbutton Switches

Features/Benefits

- ***Latching pushbutton***
- ***Non-shorting with lock***
- ***5 mm travel***
- ***SPDT***

Typical Applications

- ***Automotive interior lighting***
- ***Computer peripherals***
- ***Appliances***

PART NUMBER	PACKAGING	SCHEMATIC
PS-12G01	200 pieces	

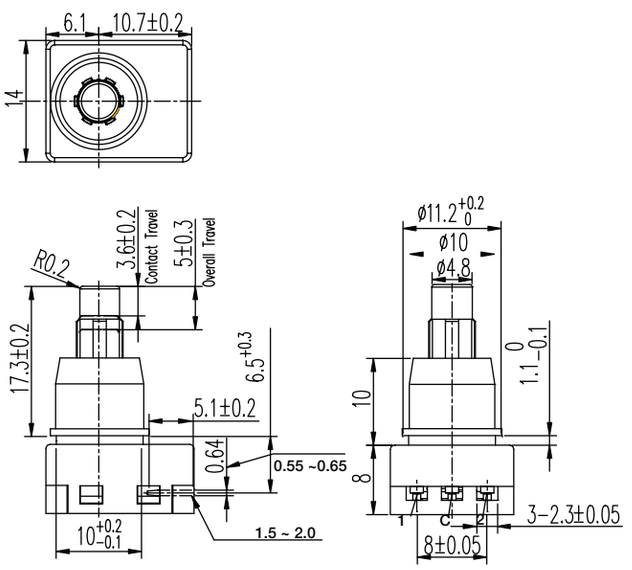

Dimensions

FOOTPRINT: 14 X 16.8 mm

HEIGHT: 18 mm

Specifications

CONTACT RATING: 1A @ 14 VDC

INITIAL CONTACT RESISTANCE: 100 m ohms max.

INSULATION RESISTANCE: 100 M ohms min.

DIELECTRIC STRENGTH: 500 V AC (50-60 Hz) between open terminals and between the frame and terminal.

OPERATING LIFE: 20,000 cycles with load

OPERATING FORCE: 400 ± 100 gf

OPERATING POSITION: 3.6 ± 0.2 mm

TOTAL TRAVEL: 5 ± 0.3 mm

OPERATING TEMPERATURE: -20˚C to 70˚C

Materials

KNOB: POM (UL 94HB)

HOUSING: PBT (UL 94V-0)

COVER: PBT (UL 94V-0)

ROTOR: PBT (UL 94V-0)

SLIDER: POM (UL 94HB)

TERMINAL: Phospher bronze, silver plated

SPRING: Stainless steel

CONTACT: Phospher bronze, silver plated

PS-12G Series
Pushbutton Switches

PART NUMBER	PACKAGING	SCHEMATIC
PS-12G03	200 pieces	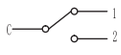

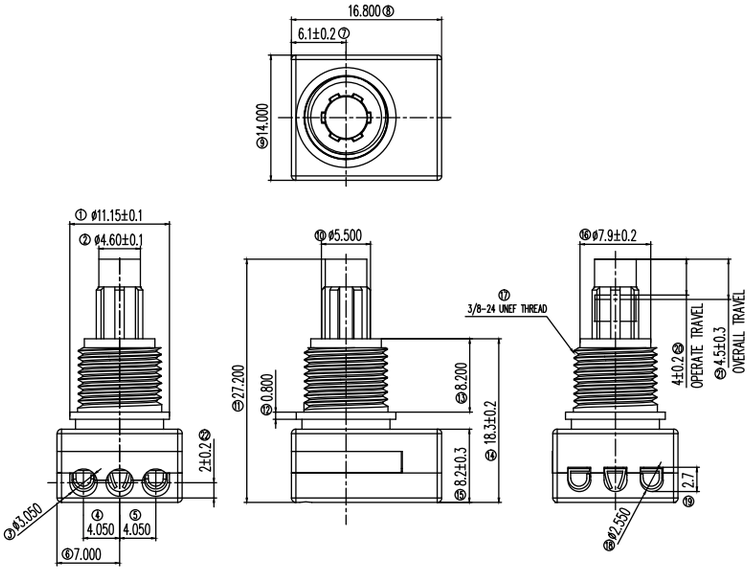

TYCO .062 Commercial Pin
and Socket Connector
PT# 770983-1

Dimensions

FOOTPRINT: 14 X 16.8 mm

HEIGHT: 18.3 mm

Specifications

CONTACT RATING: 2.2A @ 14.5 VDC

INITIAL CONTACT RESISTANCE: 50 m ohms max.

INSULATION RESISTANCE: 100 M ohms min.

DIELECTRIC STRENGTH: 500 V AC (50-60 Hz) between open terminals and between the frame and terminal.

OPERATING LIFE: 20,000 cycles with load

OPERATING FORCE: 650 ± 300 gf

OPERATING POSITION: 4.00 ± 0.2 mm

TOTAL TRAVEL: 4.5 ± 0.3 mm

OPERATING TEMPERATURE: -40˚C to 85˚C

Materials

KNOB: POM (UL 94HB)

HOUSING: PBT & PA (UL 94V-0)

COVER: PBT (UL 94V-0)

ROTOR: PBT (UL 94V-0)

SLIDER: POM (UL 94HB)

TERMINAL: Brass, silver plated

SPRING: Stainless steel

CONTACT: Phospher bronze, silver plated

PS-22 Series
Subminiature Pushbutton Switches

Features/Benefits

- ***Compact miniature push switch***
- ***Momentary or latching options***
- ***Shorting or non-shorting***
- ***DPDT***

Typical Applications

- ***Industrial***
- ***Automotive***
- ***Audio and visual equipment***

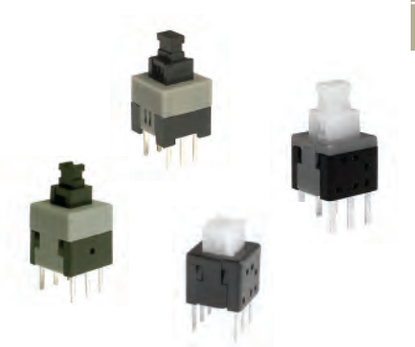

PART NUMBER	PACKAGING	SCHEMATIC
PS-2203-L NS PA	1,000 pieces	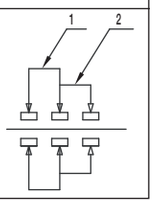
PS-2203-F NS PA	1,000 pieces	

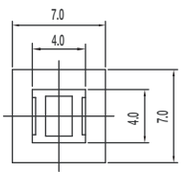

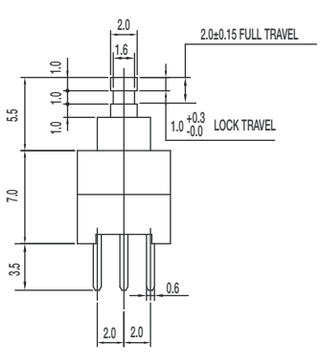

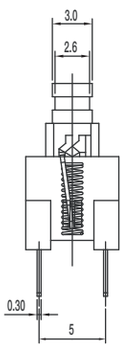

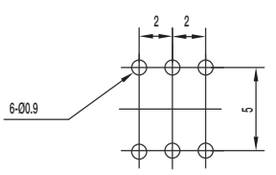

PIERCING PLAN

Dimensions

FOOTPRINT: 7.0 x 7.0 mm

HEIGHT: 12.5 mm

Specifications

CONTACT RATING: 0.1A @ 30 VDC

INITIAL CONTACT RESISTANCE: 30 m ohms max.

INSULATION RESISTANCE: 100 M ohms min.

DIELECTRIC STRENGTH: 500 V AC (50-60 Hz) between open terminals and between the frame and terminal.

OPERATING LIFE: 10,000 cycles with load

OPERATING FORCE:
200 ± 100 gf (1.96 ± 0.98N)

LOCK TRAVEL: 1 mm

TOTAL TRAVEL: 2 mm

OPERATING TEMPERATURE: -20˚C to 70˚C

Materials

KNOB: POM Black

HOUSING: PA Black

COVER: POM Grey (latch) / White (Mom)

TERMINAL: Brass, silver plated

CONTACT CLIP: Phosphor bronze., silver plated

SPRING: Stainless steel

HOOK LOCK: Stainless steel (latch)

PS-22 Series
Subminiature Pushbutton Switches

PART NUMBER	PACKAGING	SCHEMATIC
PS-2206-L NS PA	1,000 pieces	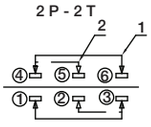
PS-2206-F NS PA	1,000 pieces	

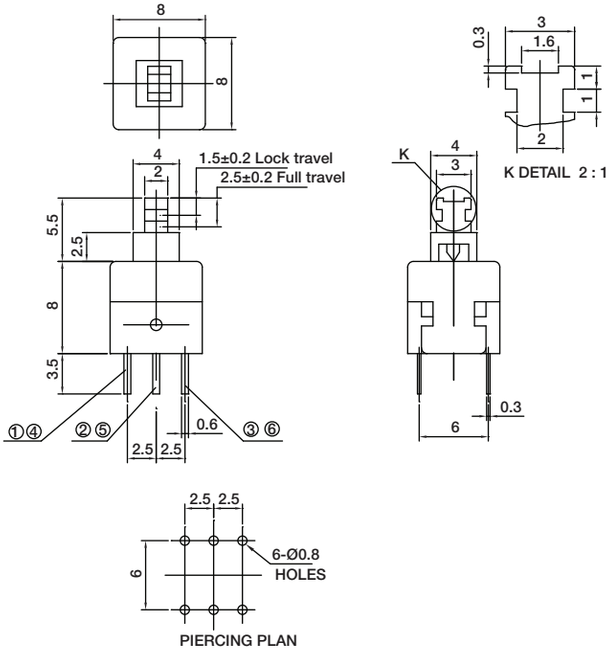

Dimensions

FOOTPRINT: 8.0 x 8.0 mm

HEIGHT: 13.5 mm

Specifications

CONTACT RATING: 0.1A @ 30 VDC

INITIAL CONTACT RESISTANCE: 70 m ohms max.

INSULATION RESISTANCE: 100 M ohms min.

DIELECTRIC STRENGTH: 500 V AC (50-60 Hz) between open terminals and between the frame and terminal.

OPERATING LIFE: 10,000 cycles with load

OPERATING FORCE:
200 ± 100 gf (1.96 ± 0.98N)

LOCK TRAVEL: 1.5 mm

TOTAL TRAVEL: 2.5 mm

OPERATING TEMPERATURE: -20˚C to 70˚C

Materials

KNOB: POM Black

HOUSING: PA Black

COVER: POM Grey (latch) / White (Mom)

TERMINAL: Brass, silver plated

CONTACT CLIP: Phosphor bronze., silver plated

SPRING: Stainless steel

HOOK LOCK: Stainless steel (latch)

PART NUMBER	PACKAGING	SCHEMATIC
PS-2214-L NS PA	1,000 pieces	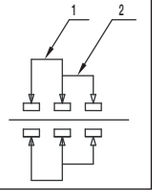
PS-2214-F NS PA	1,000 pieces	

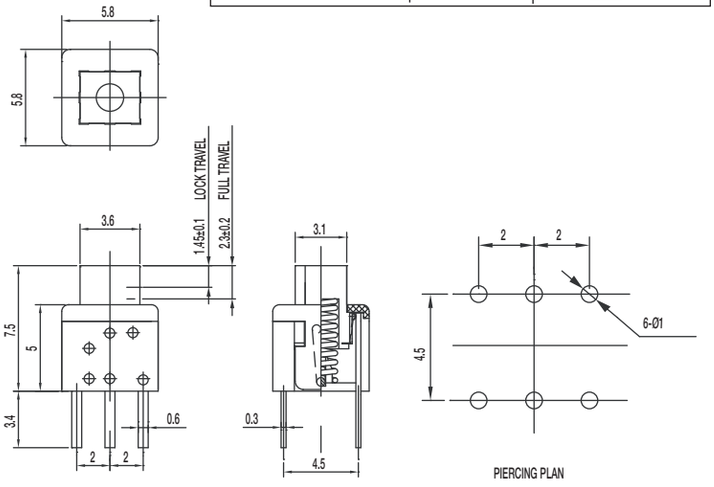

Dimensions

FOOTPRINT: 5.8 x 5.8 mm

HEIGHT: 7.5 mm

Specifications

CONTACT RATING: 0.1A @ 30 VDC

INITIAL CONTACT RESISTANCE: 80 m ohms max.

INSULATION RESISTANCE: 100 M ohms min.

DIELECTRIC STRENGTH: 500 V AC (50-60 Hz) between open terminals and between the frame and terminal.

OPERATING LIFE: 10,000 cycles with load

OPERATING FORCE:
150 ± 50 gf (1.47 ± 0.49N)

LOCK TRAVEL: 1.45 mm

TOTAL TRAVEL: 2.3 mm

OPERATING TEMPERATURE: -20˚C to 70˚C

Materials

KNOB: POM Natural (latch) / PA black

HOUSING: PA Black

COVER: PA Black

TERMINAL: Brass, silver plated

CONTACT CLIP: Phosphor bronze, silver clad

SPRING: Stainless steel

HOOK LOCK: Stainless steel (latch)

Dimensions are shown: mm
Specifications and dimensions subject to change

PS-22 Series
Subminiature Pushbutton Switches

PART NUMBER	PACKAGING	SCHEMATIC
PS-221605-L NS	1,000 pieces	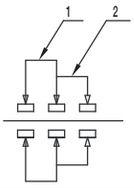
PS-221605-F NS	1,000 pieces	

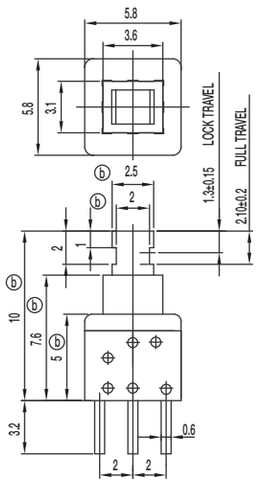

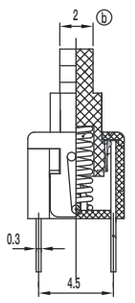

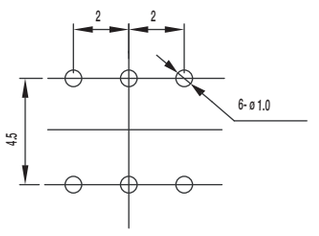

PIERCING PLAN

Dimensions

FOOTPRINT: 5.8 x 5.8 mm

HEIGHT: 10 mm

Specifications

CONTACT RATING: 0.1A @ 30 VDC / 2A @ 2 VDC

INITIAL CONTACT RESISTANCE: 80 m ohms max.

INSULATION RESISTANCE: 100 M ohms min.

DIELECTRIC STRENGTH: 500 V AC (50-60 Hz) between open terminals and between the frame and terminal.

OPERATING LIFE: 10,000 cycles with load

OPERATING FORCE:
150 ± 50 gf (1.47 ± 0.49N)

LOCK TRAVEL: 1.3 mm

TOTAL TRAVEL: 2.1 mm

OPERATING TEMPERATURE: -20˚C to 70˚C

Materials

KNOB: POM Natural

HOUSING: PA Black

COVER: PC Grey

TERMINAL: Bras, silver plated

CONTACT CLIP: Phosphor bronze, silver clad

SPRING: Stainless steel

HOOK LOCK: Stainless steel (latch)

PS Series
Miniature Pushbutton Switches

Features/Benefits

- ***Miniature size***
- ***Momentary or latching options***
- ***Broad range of products***

Typical Applications

- ***Industrial***
- ***Automotive***
- ***Audio and visual equipment***
- ***Telecommunications***

PS-22I05 DPDT NON-SHORTING

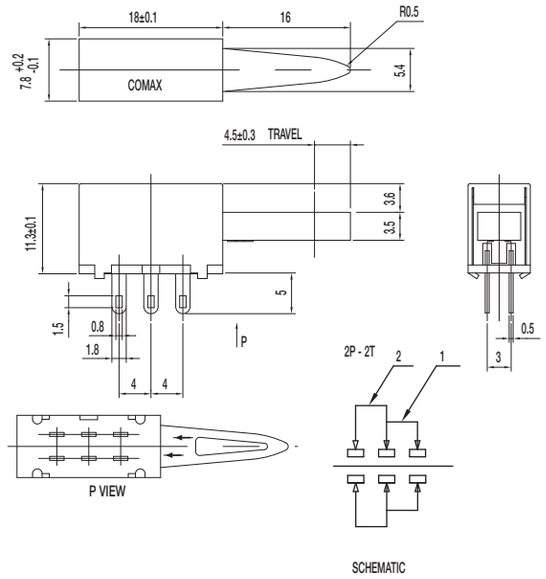

Specifications

CONTACT RATING: 0.3A @ 30 VDC

INITIAL CONTACT RESISTANCE: 30 m ohms max.

INSULATION RESISTANCE: 100 M ohms min.

DIELECTRIC STRENGTH: 500 V AC (50-60 Hz) between open terminals and between the frame and terminal.

OPERATING LIFE: 10,000 cycles with load

OPERATING FORCE: 400 ± 150 gf (3.92 ± 1.47N)

TOTAL TRAVEL: 4.5 ± 0.3 mm

OPERATING TEMPERATURE: -20˚C to 70˚C

Materials

FRAME: SECC

KNOB: POM (UL 94HB)

CONTACT PLATE: Silver clad

SPRING: SUS

TERMINAL: Silver plated

PS-12C02-F NS SPST NON-SHORTING

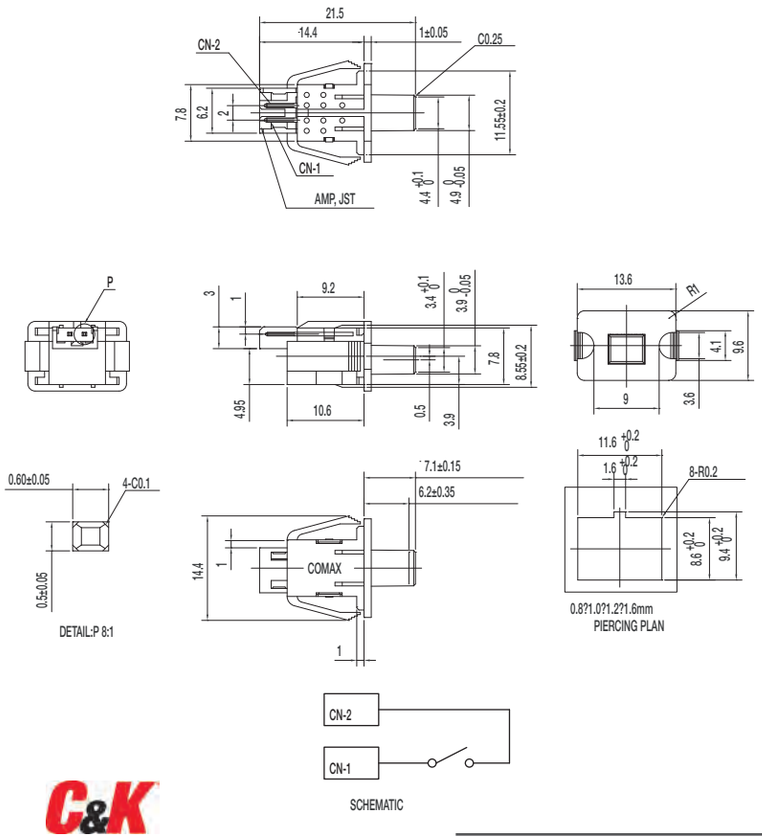

Specifications

CONTACT RATING: 100 µ A @ 3 VDC min. / 10mA @ 5 VDC max

INITIAL CONTACT RESISTANCE: 100 m ohms max.

INSULATION RESISTANCE: 100 M ohms min.

DIELECTRIC STRENGTH: 250 V AC (50-60 Hz) between open terminals and between the frame and terminal.

OPERATING LIFE: 100,000 cycles with load

OPERATING FORCE: 50 ± 15 gf (0.49 ± 0.147N)

PRE-TRAVEL: 6.20 ± 0.35 mm

OPERATING TEMPERATURE: -40˚C to 85˚C

Materials

KNOB: POM (UL 94HB)

COVER: PA (UL 94V-0)

HOUSING: PA (UL 94V-0)

SPRING: SUS

TERMINAL: Silver plated

Dimensions are shown: mm
Specifications and dimensions subject to change

PS-32C02-F NS 1P3T NON-SHORTING

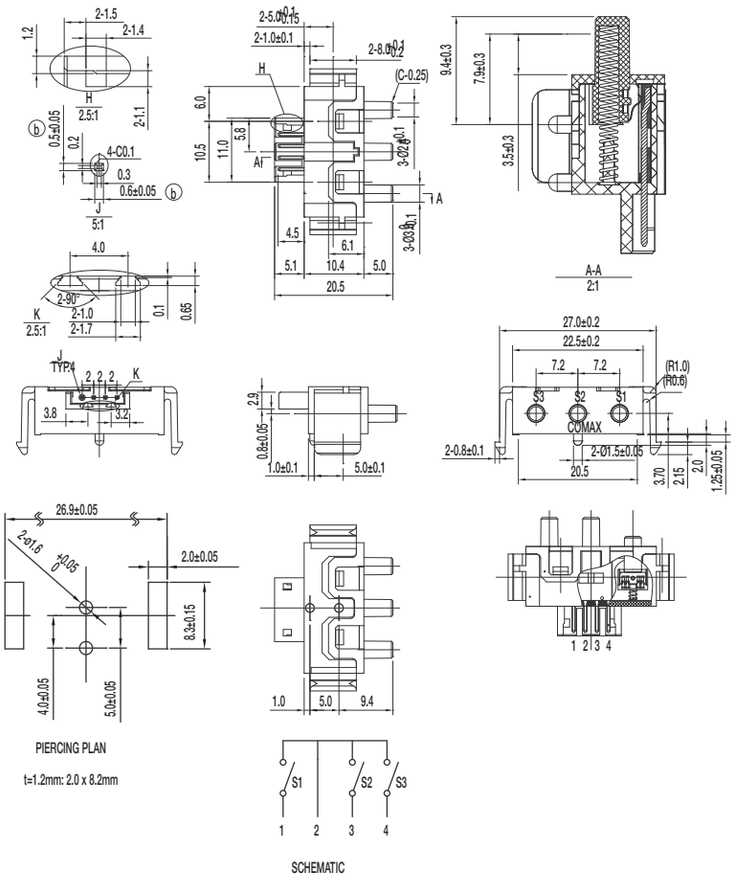

Specifications

CONTACT RATING: 100 µ A @ 3 VDC min. / 10mA @ 5 VDC max

INITIAL CONTACT RESISTANCE: 100 m ohms max.

INSULATION RESISTANCE: 100 M ohms min.

DIELECTRIC STRENGTH: 250 V AC (50-60 Hz) between open terminals and between the frame and terminal.

OPERATING LIFE: 100,000 cycles with load

OPERATING FORCE: 80 ± 20 gf (0.784 ± 0.196N)

PRE-TRAVEL: 1.5 ± 0.3 mm

OVER-TRAVEL: 3.5 ± 0.3 mm

TOTAL TRAVEL: 5 ± 0.3 mm

OPERATING TEMPERATURE: -20˚C to 65˚C

Materials

KNOB: POM (UL 94HB)

COVER: PA (UL 94V-0)

HOUSING: PA (UL 94V-0)

SPRING: SUS

TERMINAL: Silver plated

PS-42C02-F NS 1P4T NON-SHORTING

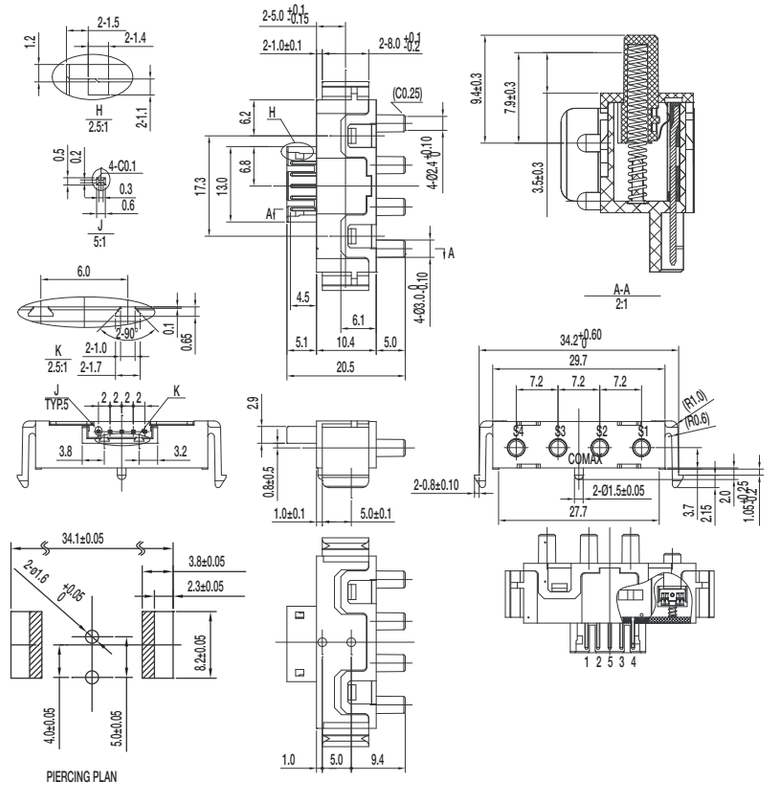

Specifications

CONTACT RATING: 100 µ A @ 3 VDC min. / 10mA @ 5 VDC max

INITIAL CONTACT RESISTANCE: 100 m ohms max.

INSULATION RESISTANCE: 100 M ohms min.

DIELECTRIC STRENGTH: 250 V AC (50-60 Hz) between open terminals and between the frame and terminal.

OPERATING LIFE: 100,000 cycles with load

OPERATING FORCE: 80 ± 20 gf (0.784 ± 0.196N)

PRE-TRAVEL: 1.5 ± 0.3 mm

OVER-TRAVEL: 3.5 ± 0.3 mm

TOTAL TRAVEL: 5 ± 0.3 mm

OPERATING TEMPERATURE: -20˚C to 65˚C

Materials

KNOB: POM (UL 94HB)

COVER: PA (UL 94V-0)

HOUSING: PA (UL 94V-0)

SPRING: SUS

TERMINAL: Silver plated

Dimensions are shown: mm
Specifications and dimensions subject to change

PS Series
Miniature Pushbutton Switches

PS-22C08-G10 NS DPDT NON-SHORTING

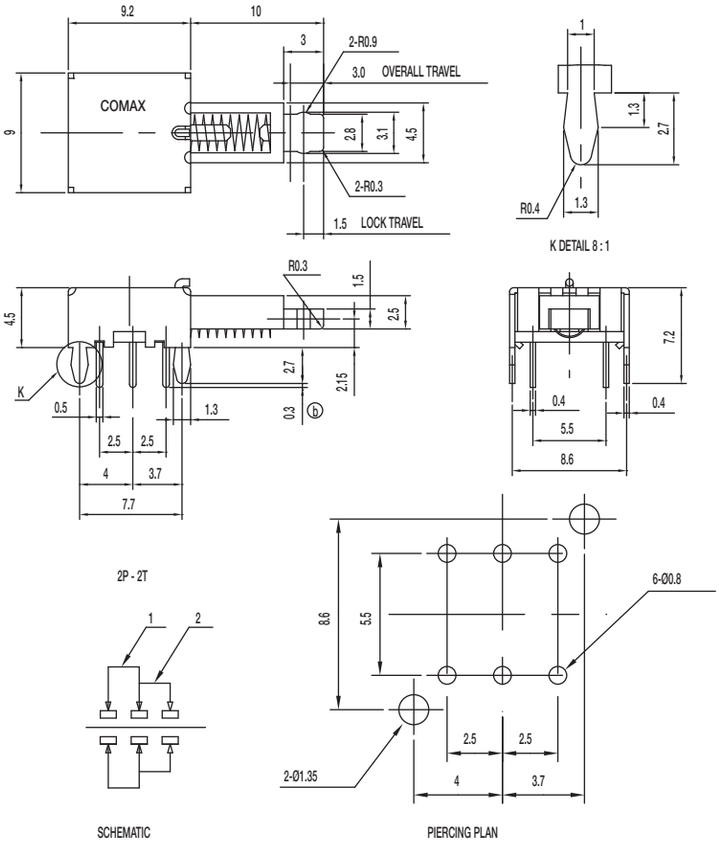

Specifications

CONTACT RATING: 0.3A @ 30 VDC
INITIAL CONTACT RESISTANCE: 30 m ohms max.
INSULATION RESISTANCE: 100 M ohms min.
DIELECTRIC STRENGTH: 500 V AC (50-60 Hz) between open terminals and between the frame and terminal.
OPERATING LIFE: 10,000 cycles without load
OPERATING FORCE: 200 ± 100 gf (1.96 ± 0.98N)
LOCK TRAVEL: 1.5 ± 0.3 mm
OVER-TRAVEL: 3 ± 0.3 mm
OPERATING TEMPERATURE: -20˚C to 70˚C

Materials

FRAME: SPCC
KNOB: POM (UL 94HB)
CONTACT: Silver plated
SPRING: SUS
TERMINAL: Silver plated

PS-22E08-G10 NS DPDT NON-SHORTING

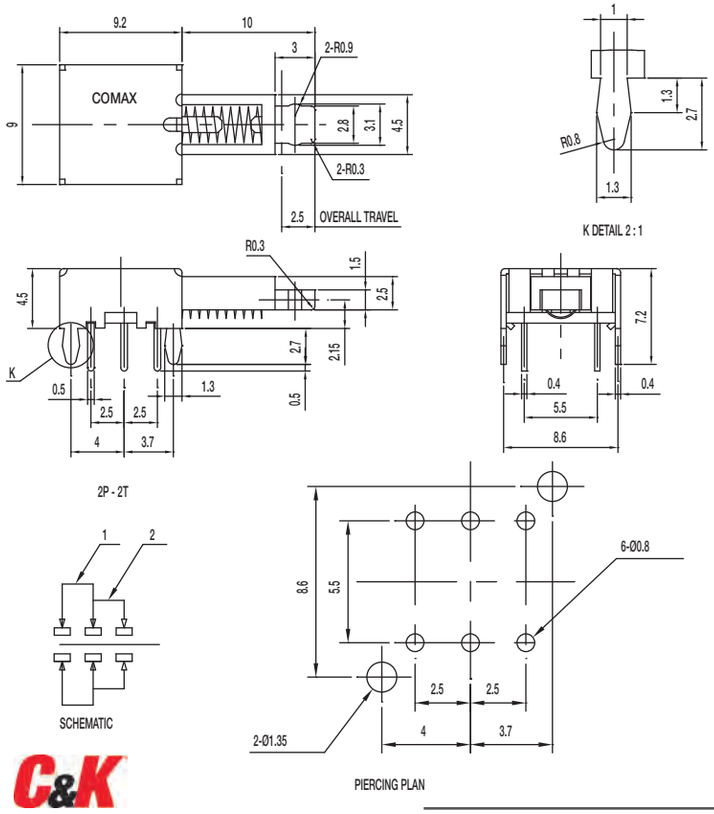

Specifications

CONTACT RATING: 0.3A @ 30 VDC
INITIAL CONTACT RESISTANCE: 30 m ohms max.
INSULATION RESISTANCE: 100 M ohms min.
DIELECTRIC STRENGTH: 500 V AC (50-60 Hz) between open terminals and between the frame and terminal.
OPERATING LIFE: 10,000 cycles without load
OPERATING FORCE: 200 ± 100 gf (1.96 ± 0.98N)
TOTAL TRAVEL: 2.5 ± 0.3 mm
OPERATING TEMPERATURE: -20˚C to 70˚C

Materials

FRAME: SPCC
KNOB: POM (UL 94HB)
CONTACT: Silver plated
SPRING: SUS
TERMINAL: Silver plated

Dimensions are shown: mm
Specifications and dimensions subject to change

PS-22E09-G 4.5 NS DPDT NON-SHORTING

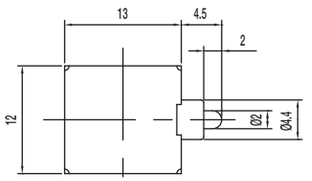

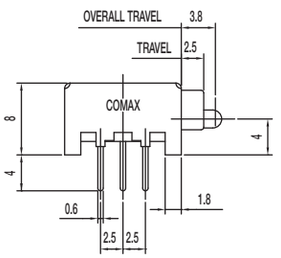

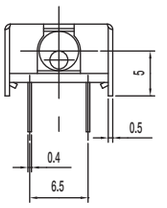

2P - 2T

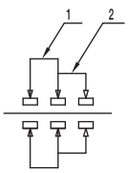

SCHEMATIC

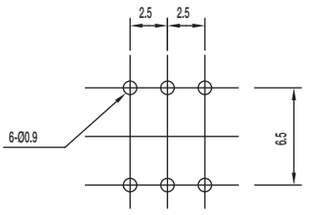

PIERCING PLAN

Specifications

CONTACT RATING: 0.3A @ 30 VDC
INITIAL CONTACT RESISTANCE: 30 m ohms max.
INSULATION RESISTANCE: 100 M ohms min.
DIELECTRIC STRENGTH: 500 V AC (50-60 Hz) between open terminals and between the frame and terminal.
OPERATING LIFE: 10,000 cycles with load
OPERATING FORCE: 70 ± 20 gf (0.686 ± 0.196N)
TRAVEL: 2.5 ± 0.3 mm
TOTAL TRAVEL: 3.8 ± 0.3 mm
OPERATING TEMPERATURE: -20˚C to 70˚C

Materials

FRAME: SPCC
KNOB: POM (UL 94HB)
CONTACT: Silver plated
SPRING: SUS
TERMINAL: Silver plated

PS-42D09-NS 4P2T NON-SHORTING

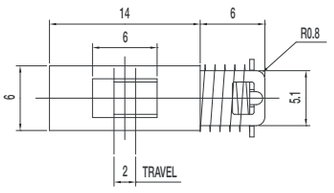

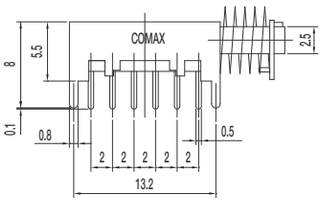

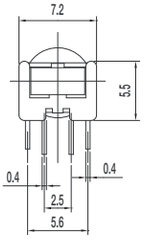

4P - 2T

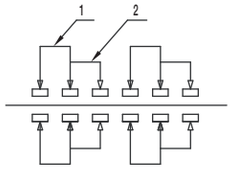

SCHEMATIC

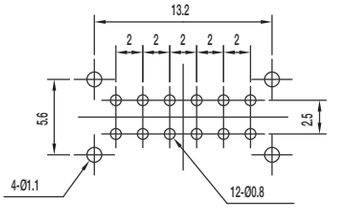

PIERCING PLAN

Specifications

CONTACT RATING: 0.3A @ 30 VDC
INITIAL CONTACT RESISTANCE: 30 m ohms max.
INSULATION RESISTANCE: 100 M ohms min.
DIELECTRIC STRENGTH: 500 V AC (50-60 Hz) between open terminals and between the frame and terminal.
OPERATING LIFE: 10,000 cycles with load
OPERATING FORCE: 250 ± 100 gf (2.45 ± 0.98N)
TRAVEL: 2 ± 0.3 mm
OPERATING TEMPERATURE: -20˚C to 70˚C

Materials

FRAME: SPCC
KNOB: POM (UL 94HB)
CONTACT PLATE: Silver plated
SPRING: Steel
TERMINAL: Silver plated

PS Series
Miniature Pushbutton Switches

PS-42D13-NS 4P2T NON-SHORTING

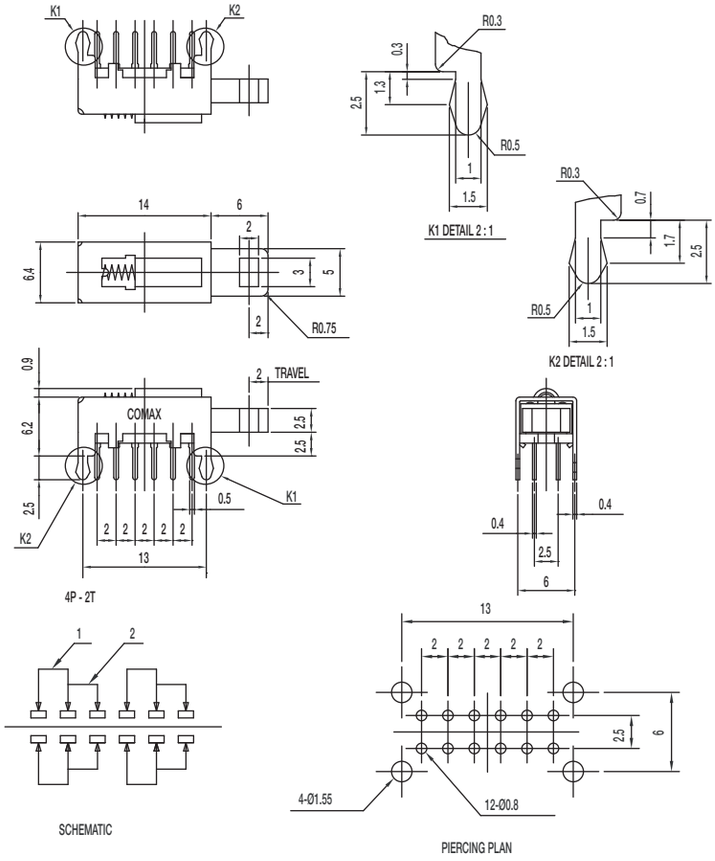

Specifications

CONTACT RATING: 0.3A @ 30 VDC

INITIAL CONTACT RESISTANCE: 30 m ohms max.

INSULATION RESISTANCE: 100 M ohms min.

DIELECTRIC STRENGTH: 500 V AC (50-60 Hz) between open terminals and between the frame and terminal.

OPERATING LIFE: 10,000 cycles with load

OPERATING FORCE: 250 ± 100 gf (2.45 ± 0.98N)

TRAVEL: 2 ± 0.3 mm

OPERATING TEMPERATURE: -20˚C to 70˚C

Materials

FRAME: SPCC

KNOB: POM (UL 94HB)

CONTACT: Silver plated

SPRING: Steel

TERMINAL: Silver plated

PS-42D16-S 4P2T SHORTING

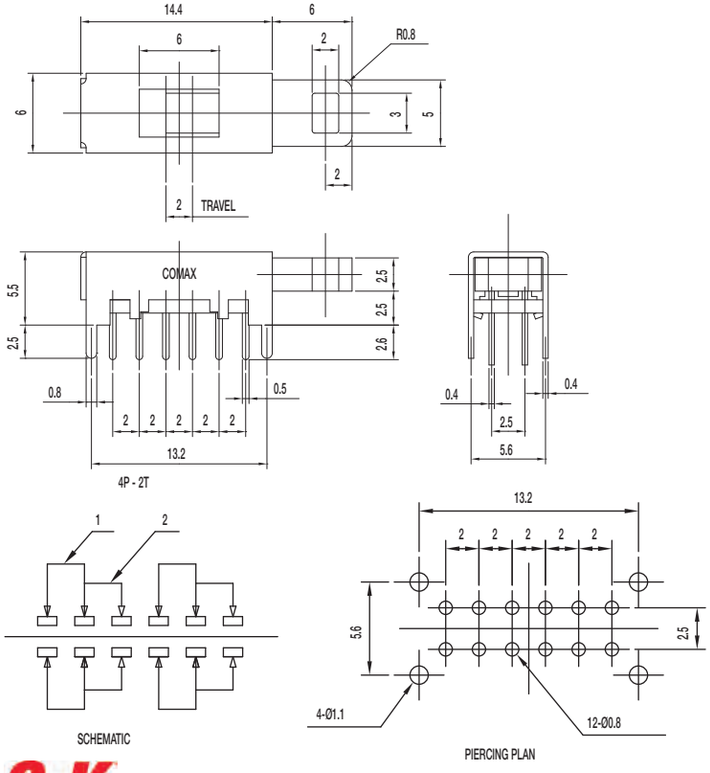

Specifications

CONTACT RATING: 0.3A @ 30 VDC

INITIAL CONTACT RESISTANCE: 30 m ohms max.

INSULATION RESISTANCE: 100 M ohms min.

DIELECTRIC STRENGTH: 500 V AC (50-60 Hz) between open terminals and between the frame and terminal.

OPERATING LIFE: 10,000 cycles with load

OPERATING FORCE: 60 ± 30 gf (0.59 ± 0.29N)

TRAVEL: 2 ± 0.3 mm

OPERATING TEMPERATURE: -20˚C to 70˚C

Materials

FRAME: SPCC

KNOB: POM (UL 94HB)

CONTACT: Silver plated

TERMINAL: Silver plated

Dimensions are shown: mm
Specifications and dimensions subject to change

PS-62D10-S 6P2T SHORTING

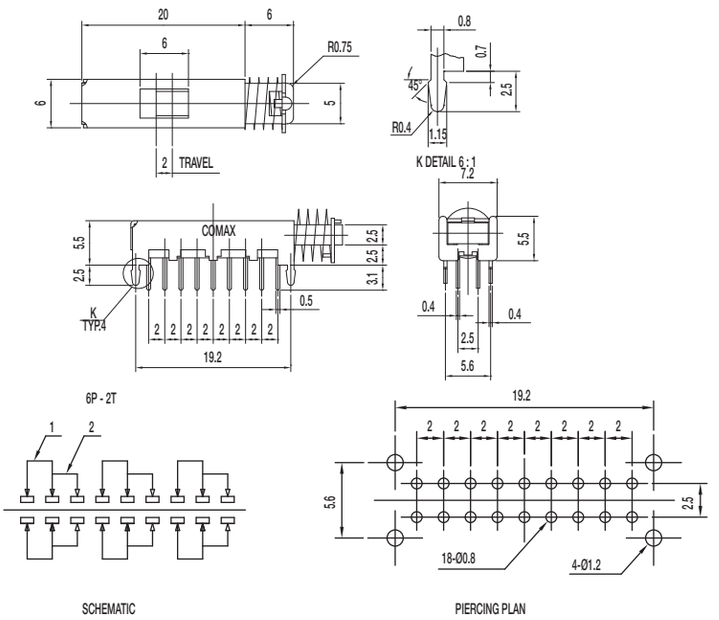

Specifications

CONTACT RATING: 0.3A @ 30 VDC

INITIAL CONTACT RESISTANCE: 30 m ohms max.

INSULATION RESISTANCE: 100 M ohms min.

DIELECTRIC STRENGTH: 500 V AC (50-60 Hz) between open terminals and between the frame and terminal.

OPERATING LIFE: 10,000 cycles with load

OPERATING FORCE: 250 ± 100 gf (2.45 ± 0.98N)

TRAVEL: 2 ± 0.3 mm

OPERATING TEMPERATURE: -20˚C to 70˚C

Materials

FRAME: SPCC

KNOB: POM (UL 94HB)

CONTACT: Silver plated

SPRING: Steel

TERMINAL: Silver plated

PS-62D13-S 6P2T SHORTING

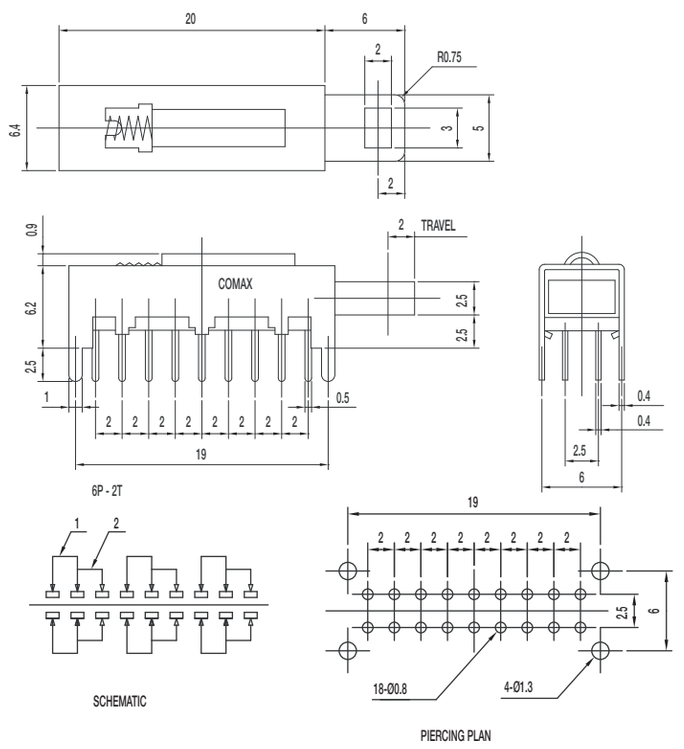

Specifications

CONTACT RATING: 0.3A @ 30 VDC

INITIAL CONTACT RESISTANCE: 30 m ohms max.

INSULATION RESISTANCE: 100 M ohms min.

DIELECTRIC STRENGTH: 500 V AC (50-60 Hz) between open terminals and between the frame and terminal.

OPERATING LIFE: 10,000 cycles with load

OPERATING FORCE: 300 ± 100 gf (2.94 ± 0.98N)

TRAVEL: 2 ± 0.3 mm

OPERATING TEMPERATURE: -20˚C to 70˚C

Materials

FRAME: SPCC

KNOB: POM (UL 94HB)

CONTACT PLATE: Silver plated

SPRING: Steel

TERMINAL: SUS

PS Series
Miniature Pushbutton Switches

PS-62D15-S 6P2T SHORTING

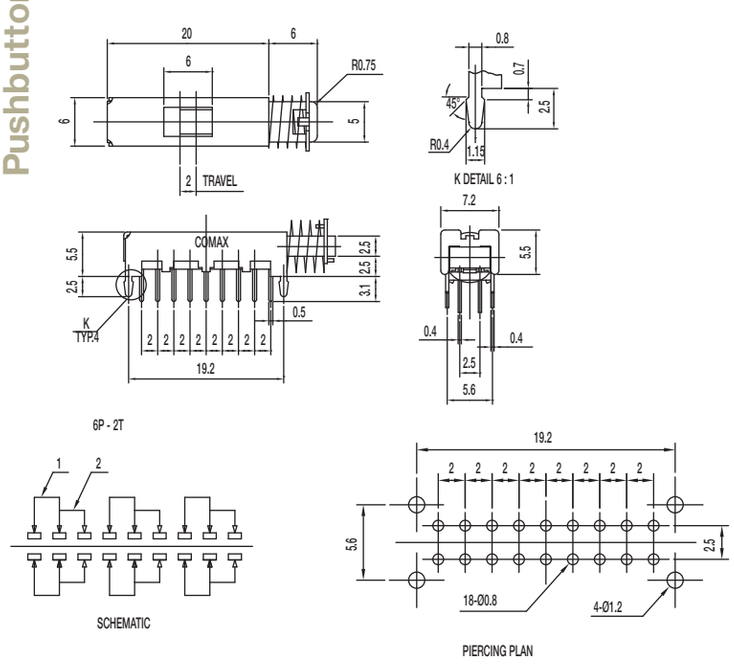

Specifications

CONTACT RATING: 0.3A @ 30 VDC

INITIAL CONTACT RESISTANCE: 30 m ohms max.

INSULATION RESISTANCE: 100 M ohms min.

DIELECTRIC STRENGTH: 500 V AC (50-60 Hz) between open terminals and between the frame and terminal.

OPERATING LIFE: 10,000 cycles with load

OPERATING FORCE: 250 ± 100 gf (2.45 ± 0.98N)

TRAVEL: 2 ± 0.3 mm

OPERATING TEMPERATURE: -20˚C to 70˚C

Materials

FRAME: SPCC

KNOB: POM (UL 94HB)

CONTACT: Silver plated

SPRING: Steel

TERMINAL: Silver plated

PS-22E02-G13 S DPDT SHORTING WITH LOCK

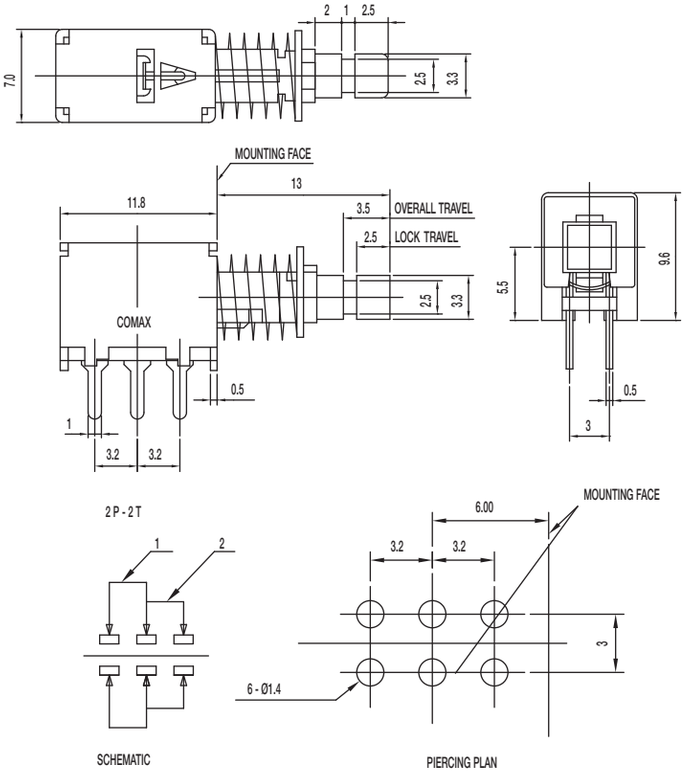

Specifications

CONTACT RATING: 0.3A @ 30 VDC

INITIAL CONTACT RESISTANCE: 30 m ohms max.

INSULATION RESISTANCE: 100 M ohms min.

DIELECTRIC STRENGTH: 500 V AC (50-60 Hz) between open terminals and between the frame and terminal.

OPERATING LIFE: 10,000 cycles with load

OPERATING FORCE: 300 ± 100 gf (2.94 ± 0.98N)

LOCK TRAVEL: 2.5 ± 0.3 mm

TOTAL TRAVEL: 3.5 ± 0.3 mm

OPERATING TEMPERATURE: -20˚C to 70˚C

Materials

FRAME: SPCC

KNOB: POM (UL 94HB)

CONTACT: Silver plated

SPRING: Steel

TERMINAL: Silver plated

PS-22E04-G13 NS DPDT NON-SHORTING WITH LOCK

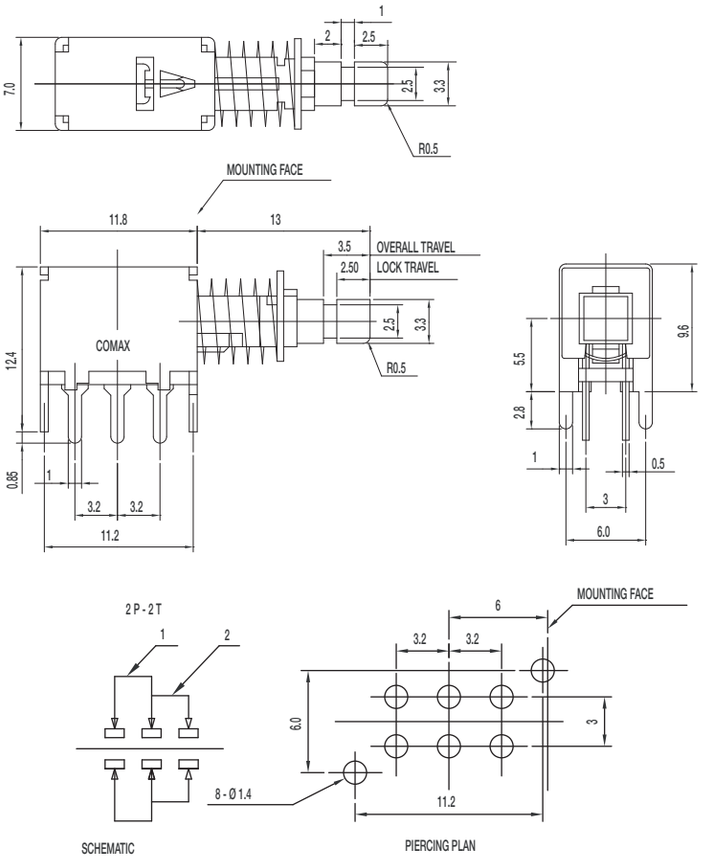

Specifications

CONTACT RATING: 0.3A @ 30 VDC
INITIAL CONTACT RESISTANCE: 30 m ohms max.
INSULATION RESISTANCE: 100 M ohms min.
DIELECTRIC STRENGTH: 500 V AC (50-60 Hz) between open terminals and between the frame and terminal.
OPERATING LIFE: 10,000 cycles with load
OPERATING FORCE: 300 ± 100 gf (2.94 ± 0.98N)
LOCK TRAVEL: 2.5 ± 0.3 mm
TOTAL TRAVEL: 3.5 ± 0.3 mm
OPERATING TEMPERATURE: -20˚C to 70˚C

Materials

FRAME: SPCC
KNOB: POM (UL 94HB)
CONTACT: Silver plated
SPRING: Steel
TERMINAL: Silver plated

PS-22E44-G13 NS DPDT NON-SHORTING WITH LOCK

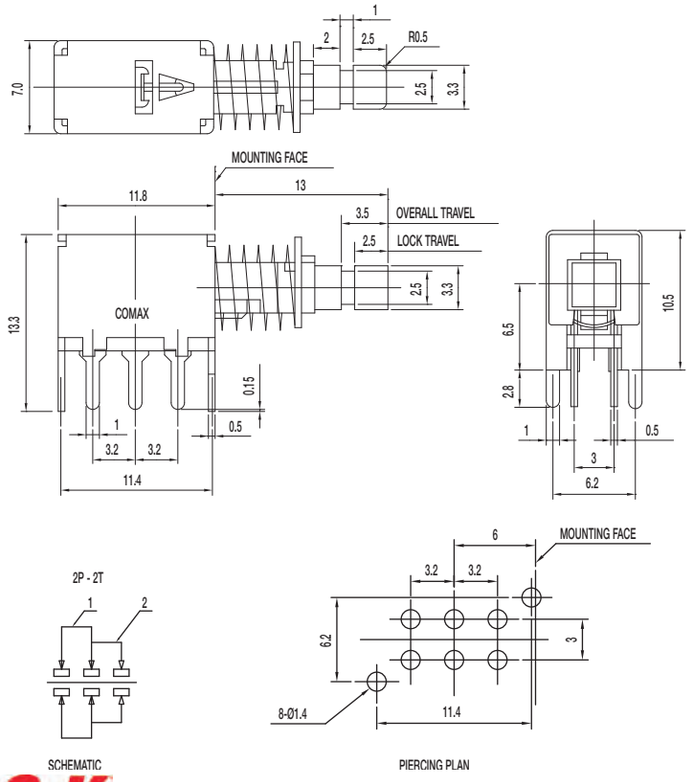

Specifications

CONTACT RATING: 0.3A @ 30 VDC
INITIAL CONTACT RESISTANCE: 30 m ohms max.
INSULATION RESISTANCE: 100 M ohms min.
DIELECTRIC STRENGTH: 500 V AC (50-60 Hz) between open terminals and between the frame and terminal.
OPERATING LIFE: 10,000 cycles with load
OPERATING FORCE: 300 ± 100 gf (2.94 ± 0.98N)
LOCK TRAVEL: 2.5 ± 0.3 mm
TOTAL TRAVEL: 3.5 ± 0.3 mm
OPERATING TEMPERATURE: -20˚C to 70˚C

Materials

FRAME: SPCC
KNOB: POM (UL 94HB)
CONTACT: Silver plated
SPRING: Steel
TERMINAL: Silver plated

Dimensions are shown: mm
Specifications and dimensions subject to change

PS Series
Miniature Pushbutton Switches

PS-22E75-G13 NS DPDT NON-SHORTING WITH LOCK

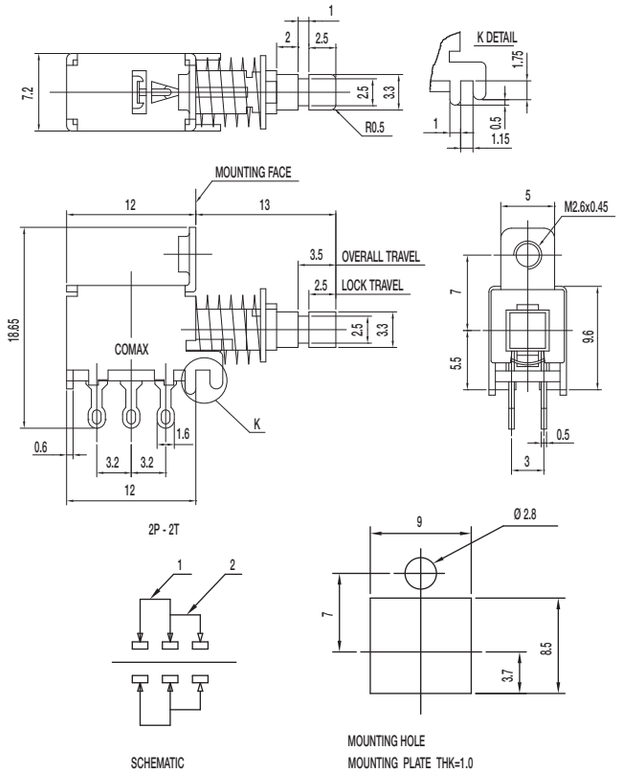

Specifications

CONTACT RATING: 0.3A @ 30 VDC

INITIAL CONTACT RESISTANCE: 30 m ohms max.

INSULATION RESISTANCE: 100 M ohms min.

DIELECTRIC STRENGTH: 500 V AC (50-60 Hz) between open terminals and between the frame and terminal.

OPERATING LIFE: 10,000 cycles with load

OPERATING FORCE: 300 ± 100 gf (2.94 ± 0.98N)

LOCK TRAVEL: 2.5 ± 0.3 mm

TOTAL TRAVEL: 3.5 ± 0.3 mm

OPERATING TEMPERATURE: -20˚C to 70˚C

Materials

FRAME: SPCC

KNOB: POM (UL 94HB)

CONTACT: Silver plated

SPRING: Steel

TERMINAL: Silver plated

PS-22E95-G13 NS DPDT NON-SHORTING WITH LOCK

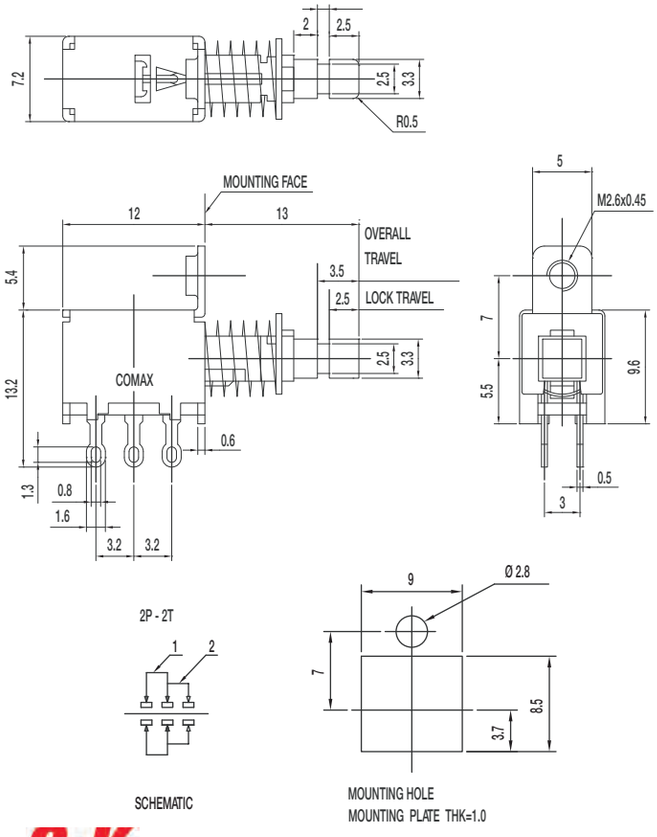

Specifications

CONTACT RATING: 0.3A @ 30 VDC

INITIAL CONTACT RESISTANCE: 30 m ohms max.

INSULATION RESISTANCE: 100 M ohms min.

DIELECTRIC STRENGTH: 500 V AC (50-60 Hz) between open terminals and between the frame and terminal.

OPERATING LIFE: 10,000 cycles with load

OPERATING FORCE: 300 ± 100 gf (2.94 ± 0.98N)

LOCK TRAVEL: 2.5 ± 0.3 mm

TOTAL TRAVEL: 3.5 ± 0.3 mm

OPERATING TEMPERATURE: -20˚C to 70˚C

Materials

FRAME: SPCC

KNOB: POM (UL 94HB)

CONTACT: Silver plated

SPRING: Steel

TERMINAL: Silver plated

Dimensions are shown: mm
Specifications and dimensions subject to change

PS-22F02-G13 S DPDT SHORTING

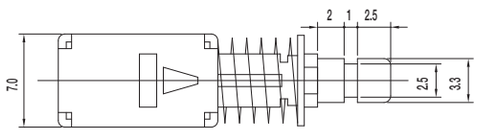

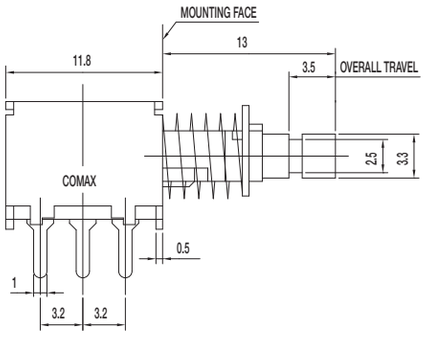

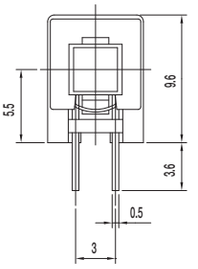

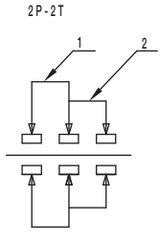

SCHEMATIC

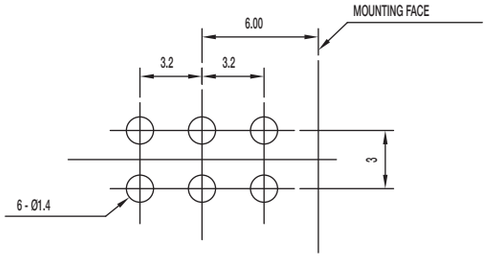

PIERCING PLAN

Specifications

CONTACT RATING: 0.3A @ 30 VDC
INITIAL CONTACT RESISTANCE: 30 m ohms max.
INSULATION RESISTANCE: 100 M ohms min.
DIELECTRIC STRENGTH: 500 V AC (50-60 Hz) between openterminals and between the frame and terminal.
OPERATING LIFE: 10,000 cycles with load
OPERATING FORCE: 300 ± 100 gf (2.94 ± 0.98N)
TOTAL TRAVEL: 3.5 ± 0.3 mm
OPERATING TEMPERATURE: -20˚C to 70˚C

Materials

FRAME: SPCC
KNOB: POM (UL 94HB)
CONTACT: Silver plated
SPRING: Steel
TERMINAL: Silver plated

PS-22F04-G13 NS DPDT NON_SHORTING

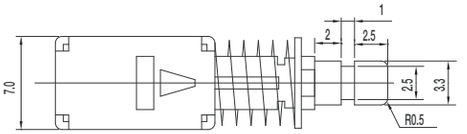

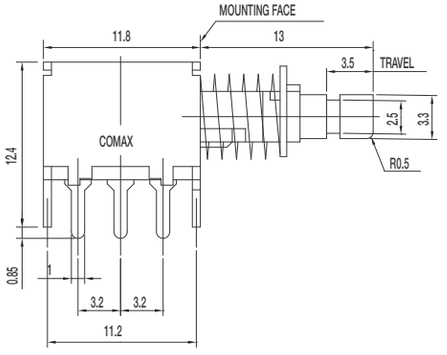

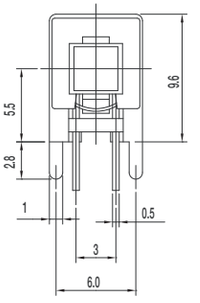

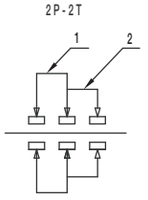

SCHEMATIC

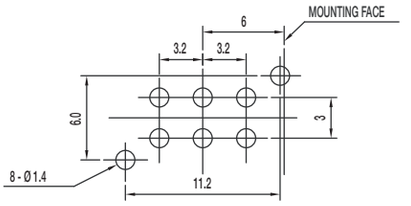

PIERCING PLAN

Specifications

CONTACT RATING: 0.3A @ 30 VDC
INITIAL CONTACT RESISTANCE: 30 m ohms max.
INSULATION RESISTANCE: 100 M ohms min.
DIELECTRIC STRENGTH: 500 V AC (50-60 Hz) between open terminals and between the frame and terminal.
OPERATING LIFE: 10,000 cycles with load
OPERATING FORCE: 300 ± 100 gf (2.94 ± 0.98N)
TOTAL TRAVEL: 3.5 ± 0.3 mm
OPERATING TEMPERATURE: -20˚C to 70˚C

Materials

FRAME: SPCC
KNOB: POM (UL 94HB)
CONTACT: Silver plated
SPRING: Steel
TERMINAL: Silver plated

PS Series
Miniature Pushbutton Switches

PS-22F24-G13 NS DPDT NON_SHORTING

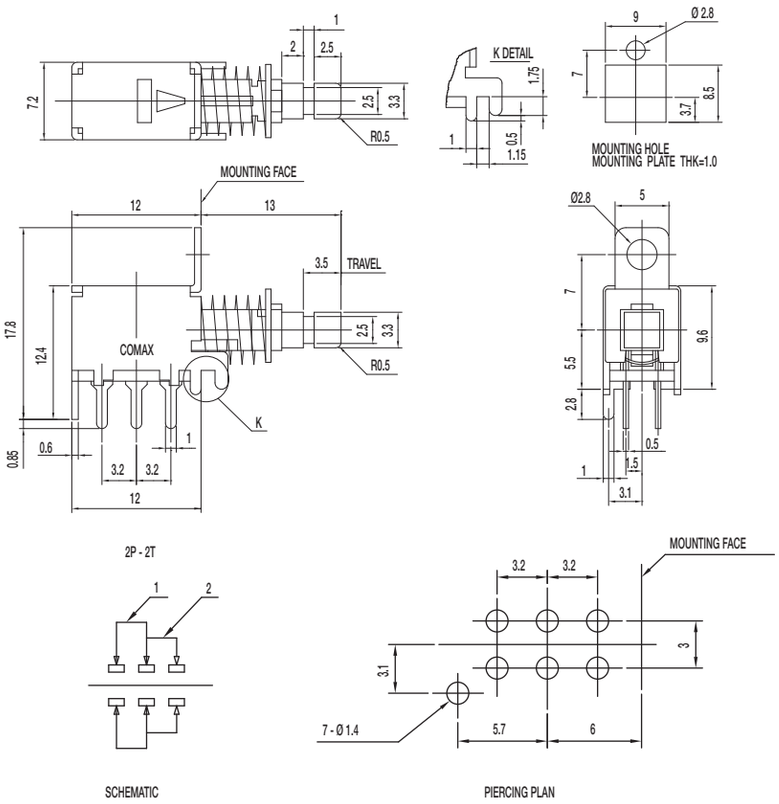

Specifications

CONTACT RATING: 0.3A @ 30 VDC
INITIAL CONTACT RESISTANCE: 30 m ohms max.
INSULATION RESISTANCE: 100 M ohms min.
DIELECTRIC STRENGTH: 500 V AC (50-60 Hz) between open terminals and between the frame and terminal.
OPERATING LIFE: 10,000 cycles with load
OPERATING FORCE: 300 ± 100 gf (2.94 ± 0.98N)
TOTAL TRAVEL: 3.5 ± 0.3 mm
OPERATING TEMPERATURE: -20˚C to 70˚C

Materials

FRAME: SPCC
KNOB: POM (UL 94HB)
CONTACT: Silver plated
SPRING: Steel
TERMINAL: Silver plated

PS-22F44-G13 NS DPDT NON_SHORTING

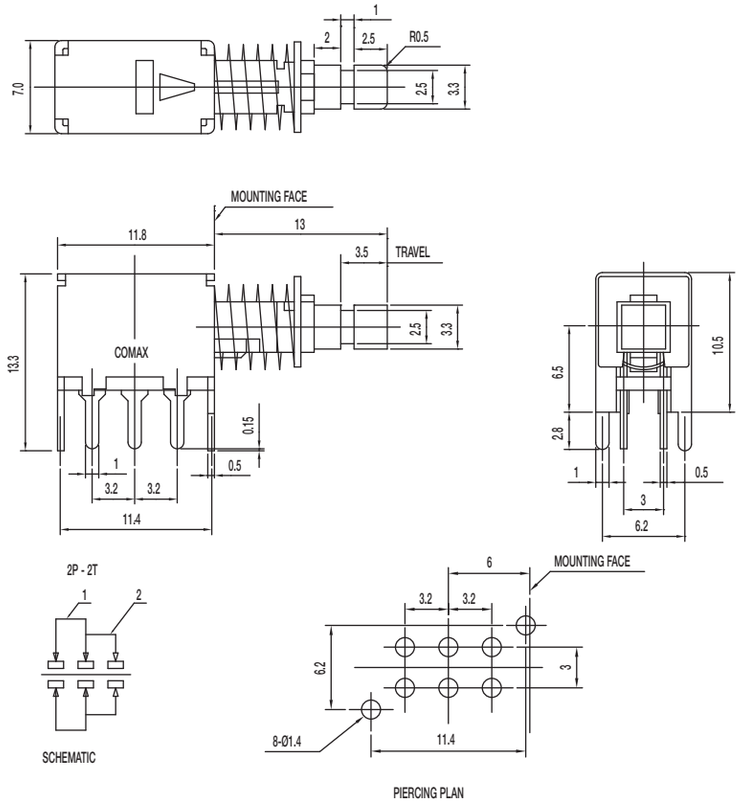

Specifications

CONTACT RATING: 0.3A @ 30 VDC
INITIAL CONTACT RESISTANCE: 30 m ohms max.
INSULATION RESISTANCE: 100 M ohms min.
DIELECTRIC STRENGTH: 500 V AC (50-60 Hz) between open terminals and between the frame and terminal.
OPERATING LIFE: 10,000 cycles with load
OPERATING FORCE: 300 ± 100 gf (2.94 ± 0.98N)
TOTAL TRAVEL: 3.5 ± 0.3 mm
OPERATING TEMPERATURE: -20˚C to 70˚C

Materials

FRAME: SPCC
KNOB: POM (UL 94HB)
CONTACT: Silver plated
SPRING: Steel
TERMINAL: Silver plated

Dimensions are shown: mm
Specifications and dimensions subject to change

Tactile Switches
Product Selection Guide

Surface Mount							
Series	**KXT2**	**KXT3**	**KMT2**	**KMT0**	**KMR 2-8**	**KMS**	**PTS525**
Size on PCB L x W (mm)	3,9 x 3	3 x 2	3 x 2,6	3 x 2,6	4,2 x 2,8	4,2 x 3,55	5,2 x 5,2
Total Height (mm)	1,05	0,6	0,65	0,65	1,9 2,5	1,42	0,8 and 1,5
Travel (mm)	0,1	0,13	0,15	0,15	0,2 to 0,35	0,25 to 0,3	0,3
Actuation Force (N)	100 gf 200 gf	100 gf 160gf 240 gf 330 gf	1,0 1,6	1,0; 1,6 2,3; 3,4	1,2; 2,0 3,0; 4,0	2,0 3,0	1,6 2,6
Contact Type	Silver	Silver	Silver	Silver	Silver / Gold	Silver / Gold	Silver
Max. Voltage (V)	12	15	32	32	32	32	32
Max. Switching Power (VA)	0,5	0,5	0,5	0,5	1 / 0,2	1 / 0,2	1
Life Cycles	100,000	300,000 500,000	150,000	300,000/600,000 1,000,000	100,000 300,000	100,000	100,000
IP Rating	IP64	IP64	IP54	IP68	IP40	IP40	IP40
Page Number	B-5	B-7	B-9	B-11	B-13	B-23	B-25

Surface Mount	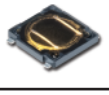						
Series	**PTS530**	**PTS540**	**PTS810**	**PTS820**	**PTS830**	**PTS840**	**KSR**
Size on PCB L x W (mm)	4,5 x 4,5	3,7 x 3,7	4,2 x 3,2	3,9 x 2,9	3,5 x 2,6	3,5 x 3,55	7,15 x 3,8 7,3 x 3,8
Total Height (mm)	0,55 and 0,65	0,55 / 0,65	2,5	1,5/2,0/2,5	1,4	1,35	2,5
Travel (mm)	0,2	0,15	0,15/0,2	0,2	0,15	0,2	0,3 to 0,5
Actuation Force (N)	1,0; 1,6; 2,0; 2,6; 4,0; 6,0	160 gf 230 gf	1,6; 2,6; 4,0; 6,0	1,6 2,5	160 gf 450 gf	1,6 2,2	1,2; 2,0; 3,0; 4,5
Contact Type	Silver	Silver	Silver	Silver	Silver	Silver	Silver / Gold
Max. Voltage (V)	12	12	16	12	12	12	32
Max. Switching Power (VA)	–	–	–	-	-	-	1 / 0,2
Life Cycles	150,000 to 1,000,000	300,000 500,000	50,000 to 150,000	100,000 200,000	200,000 500,000	100,000	100,000 200,000
IP Rating	-	IP40	IP40	IP40	IP40	IP40	IP50
Page Number	B-29	B-31	B-33	B-35	B-38	B-42	B-45

* Other options available by request

Dimensions are shown: mm
Specifications and dimensions subject to change

Surface Mount Thru-Hole Options				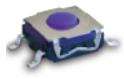	
Series	**KSS**	**KSC4V2**	**KSC 1 - 10**	**KSE**	**KT**
Footprint	5,5 x 4,4	2 holes ø 1,1 2 pads 1,5 x 0,8	J 6,8 x 6,2 G 10 x 6,2	6,8 x 6,2	SA 7,5x5 SA2 7,5x7
Total Height (mm)	1,7	5,0*		3,1 / 4,3	6,6 7,11 with tab
Travel (mm)	0,3	0,7*	0,20 to 0,75 *	0,3	0,3 to 0,5
Actuation Force (N)	2 2,5 4	3.5*	1,1 to 5,5 *	1.5 2.25	3
Contact Type	Silver / Gold	Silver / Gold	Silver / Gold	Silver	Silver / Gold
Max. Voltage (V)	32	32	32	32	50
Max. Switching Power (VA)	1 / 0,2	1 / 0,2	1 / 0.2	1	1 / 0.2
Life Cycles	100,000	300,000	100,000 to 1,000,000	300,000	100,000
IP Rating	IP40	IP67	IP67	IP67	
Page Number	B-49	B-63	B-51	B-65	B-68

Surface Mount Thru-Hole Options							
Series	**K5AT**	**K8**	**K5V**	**KSF/KSI**	**KSA**	**KSA-V**	**KSA MKII**
Footprint	G 8,4 x 10,8	G 8,4 x 10,8	8 x 9 x 17 / 9 x 13	7,62 x 5,08	7,62 x 5,08	7,62 x 2,54	7,62 x 5,08
Total Height (mm)	6,1	6	9 / 13	2,6	4,7 button option	8	4,7
Travel (mm)	0,5	0,45	1,2	0,3 to 0,5	0,3 to 0,5	0,3 to 0,5	0,3 to 0,5
Actuation Force (N)	4.0	4.0	4.0	1.3 3.0 1.6 5.0	1.3 3.0 5.0	1.3 3.0 5.0	1.3 3.0 5.0
Contact Type	Gold	Silver	Gold	Silver / Gold	Silver / Gold	Silver / Gold	Silver / Gold
Max. Voltage (V)	32	32	32	32	32	32	32
Max. Switching Power (VA)	1	1	1	1 / 0.2	1 / 0.2	1 / 0.2	1 / 0.2
Life Cycles	100,000	300,000	25,000	100,000	100,000	100,000	100,000 1,000,000
IP Rating	IP40	IP40	IP40	IP60	IP60	IP60	IP67
Page Number	B-73	B-75	B-78	B-82	B-84	B-84	B-89

* Other options available by request

Tactile Switches
Product Selection Guide

Surface Mount Thru-Hole Options					
Series	**KSJ**	**KSJ-V**	**KSJ**	**KSJ-V**	**PTS635**
Footprint	7,62 x 5,08	7,62 x 2,54	7,62 x 5,08	7,62 x 2,54	6 x 3,5
Total Height (mm)	9,9	8	6,65	8	2,5 4,3 5,0
Travel (mm)	0,3 to 0,5	0,3 to 0,5	0,55 to 0,7	0,55 to 0,7	0,25
Actuation Force (N)	1,3 3,0	1,3 3,0	2,0 3,0	2,0 3,0	1,3 2,0 2,6
Contact Type	Silver / Gold	Silver / Gold	Silver / Gold	Silver / Gold	Silver
Max. Voltage (V)	32	32	32	32	12
Life Cycles	100,000	100,000	100,000 30,000	100,000 30,000	20,000
IP Rating	IP60	IP60	IP60	IP60	IP40
Page Number	B-84	B-84	B-91	B-91	B-93

Surface Mount Thru-Hole Options			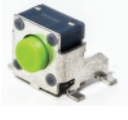			
Series	**PTS641**	**PTS645**	**PTS645-V**	**PTS125**	**ITS**	
Footprint	6,3 x 6,4	6 x 6	7,0 x 2,5	12 x 12	variety of sizes available	
Total Height (mm)	2,5 3,1 3,4	4,3; 5,0; 7,0; 9,5;	7,1	4,3 7,3 Sq. 8,5 12,0		
Travel (mm)	0,20 / 0,30	0,25	0,25	0,30	0,25	
Actuation Force (N)	160 gf 250 gf 320 gf	1,3; 1,6 2,0; 2,6	1,3; 1,6 2,0; 2,6	1,6 2,6	160 gf	
Contact Type	Silver	Silver	Silver	Silver	Silver	
Max. Voltage (V)	12	12	12	12	12	
Life Cycles	100,000	100,000	100,000	200,000	50,000	
IP Rating	IP40	IP40	IP40	IP40	IP40	
Page Number	B-96	B-98	B-103	B-105	B-109	

KXT2 Series
Double Action Ultra Low Profile Top Actuated

Features

- ***3.9 x 3.0 mm footprint***
- ***1.05 mm thickness***
- ***Dual action***

Typical Applications

- ***Wearable electronics***
- ***Mobile Phones***
- ***Portable Electronics***

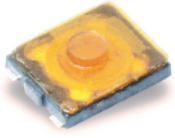

Specification

FUNCTION: momentary action
CONTACT ARRANGEMENT: Dual action = SPDT, N.O.
TERMINALS: G type for SMT
TRAVEL: 0.1 mm ± 0.05 mm
TRAVEL: 0.2 mm + 0.1 / - 0.05 mm

Mechanical

	Operating force gf		Operating Life
KXT 211 LHS	Push force 1 Push force 2	100 ± 40 200 ± 50	100,000

Electrical

MAXIMUM VOLTAGE:	12 VDC
MAXIMUM CURRENT DC:	50 mA
DIELECTRIC STRENGTH:	250 V (50 Hz, 1 min.)
CONTACT RESISTANCE:	≤ 500 mΩ
INSULATION RESISTANCE:	100 MΩ
BOUNCE TIME:	≤ 10 ms

Environmental

OPERATING TEMPERATURE: -40˚C to 85˚C
STORAGE TEMPERATURE: -40˚C to 85˚C

Process

SOLDERING: This component is suited to the following methods:
Infrared Reflow Soldering in accordance with IEC61760-1

Packaging

In reels of 6,000 pieces
Dimensions of reels according to EIA RS481 or IEC 2863
External diameter 178 mm ± 2mm

NOTE: Specifications listed above are for switches with standard options.
For information on specific and custom switches, consult Customer Service Center.

Part Number Description

For any part number different from those listed above, please consult your local representative.

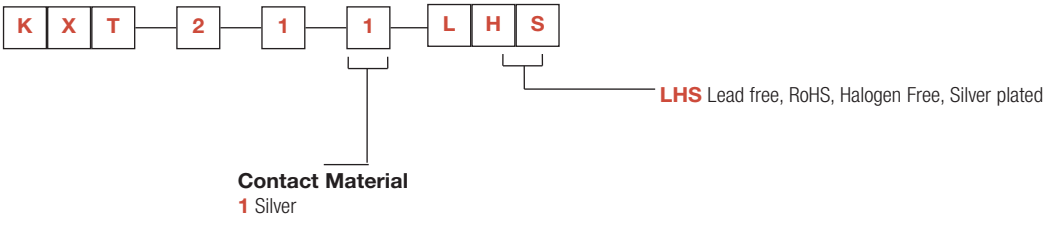

KXT2 Series
Double Action Ultra Low Profile Top Actuated

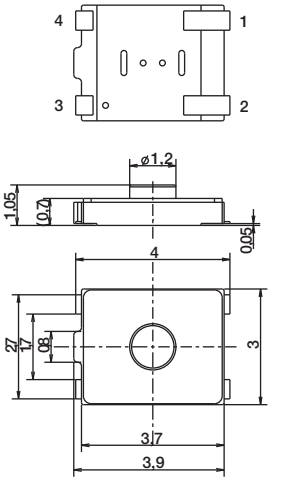

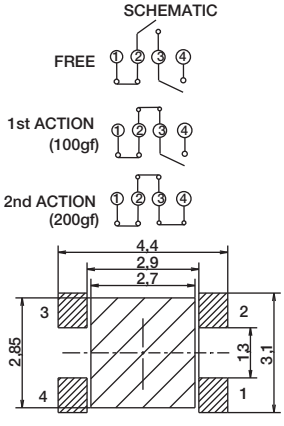

RECOMMENDED PCB LAYOUT

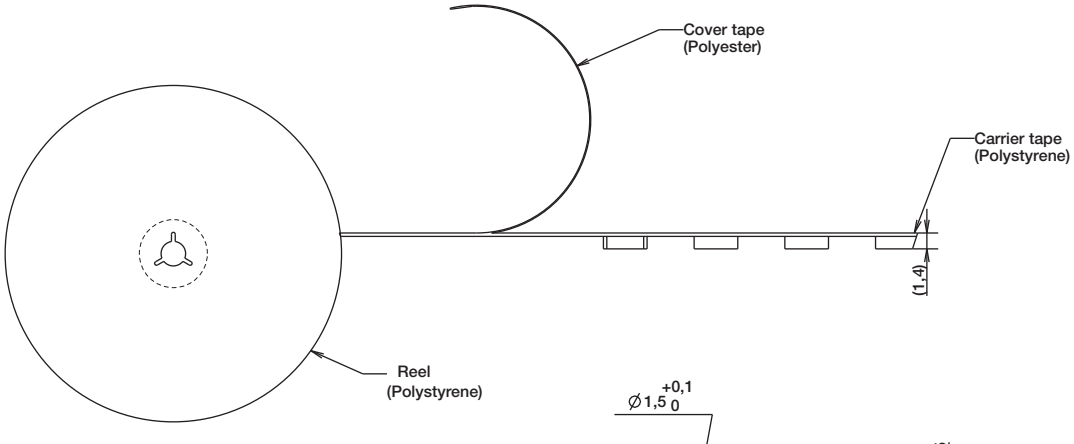

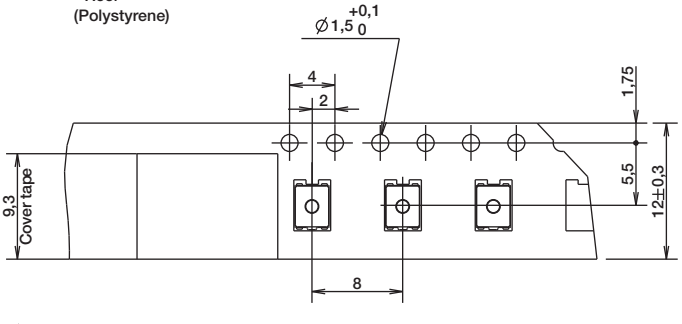

CARRIER TAPE

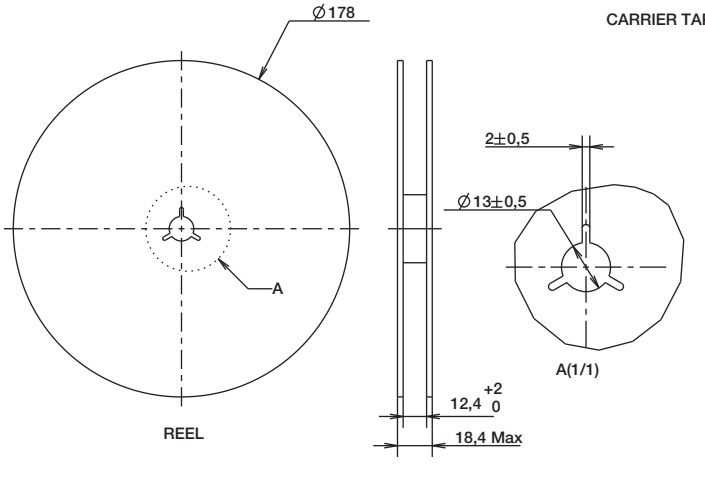

REEL

Dimensions are shown: mm
Specifications and dimensions subject to change

KXT3 Series
Ultra Low Profile Top Actuated

Features

- *3.0 x 2.0 mm footprint*
- *0.6 mm thickness*
- *High number of cycle*

Typical Applications

- *Wearable electronics*
- *In-Ear headphones, Earbuds*
- *Mobile Phones*
- *Portable Electronics*
- *Hearing Aids*

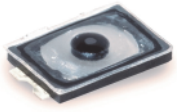

Specification

FUNCTION: momentary action
CONTACT ARRANGEMENT: 1 make contact = SPST, N.O.
TERMINALS: G type for SMT
TRAVEL: 0.13 mm ± 0.05 mm

Mechanical

	Operating force gf	Operating Life	Casing Color
KXT 311 LHS	100 ± 50	300,000	Black
KXT 321 LHS	160 ± 50	500,000	Black
KXT 331 LHS	240 ± 70	500,000	Black
KXT 341 LHS	330 ± 70	300,000	Black

Electrical

MAXIMUM VOLTAGE: 15 VDC
MAXIMUM CURRENT DC: 20 mA
DIELECTRIC STRENGTH: (50/60 Hz, 1 min) 250 Vrms
CONTACT RESISTANCE: ≤ 500 mΩ
INSULATION RESISTANCE: ≥ 50 MΩ
BOUNCE TIME: ≤ 10 ms

Environmental

OPERATING TEMPERATURE: -40˚C to 85˚C
STORAGE TEMPERATURE: -40˚C to 85˚C

Process

SOLDERING: This component is suited to the following methods:
Infrared Reflow Soldering in accordance with IEC61760-1

Packaging

In reels of 8,500 pieces
Dimensions of reels according to EIA 481B
External diameter 330 mm

NOTE: Specifications listed above are for switches with standard options.
For information on specific and custom switches, consult Customer Service Center.

Part Number Description

For any part number different from those listed above, please consult your local representative.

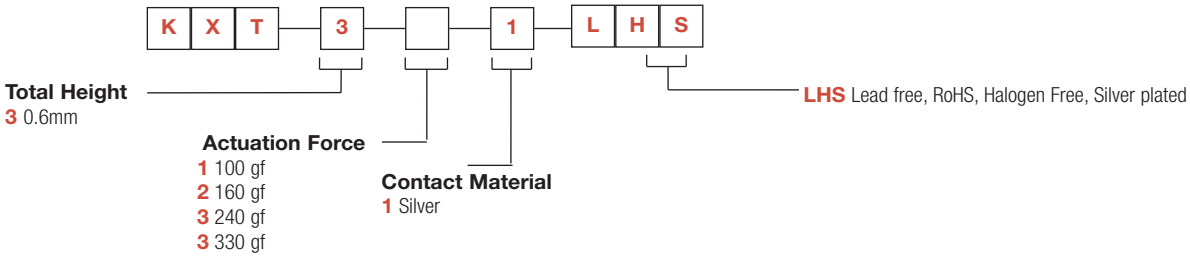

KXT3 Series
Ultra Low Profile Top Actuated

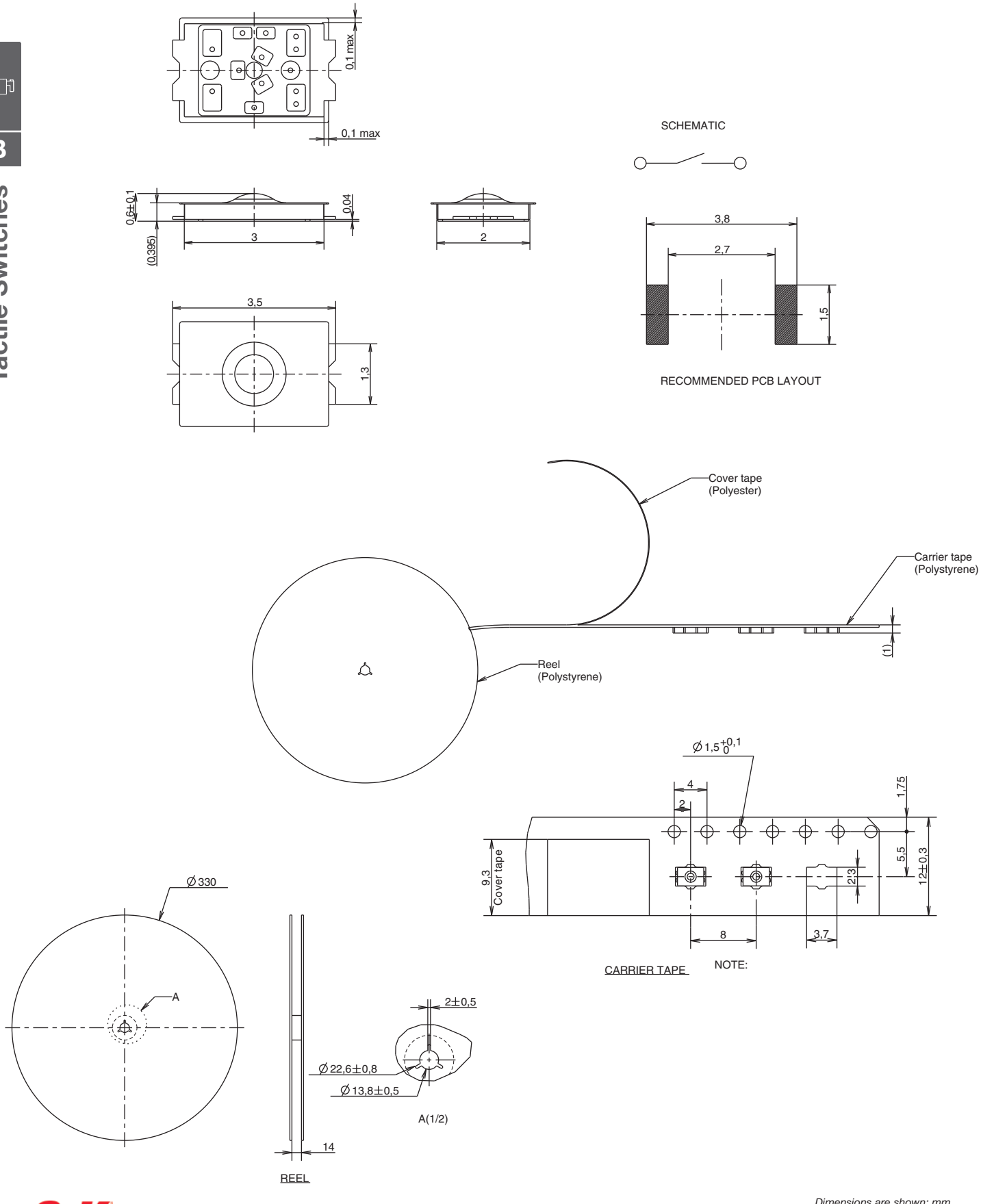

Features

- *Smallest footprint*
- *High number of cycles within the smallest packaging*
- *Smallest thickness with integrated actuator*
- *Ground pin option*
- *Halogen free*

Typical Applications

- *Mobile Phones*
- *Hearing Aids*
- *MP3 accessories*
- *Bluetooth Headset*

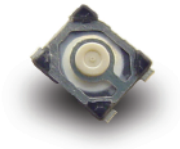

Specification

FUNCTION: momentary action
CONTACT ARRANGEMENT: 1 make contact = SPST, N.O.
TERMINALS: Gullwing type for SMT

Mechanical

Type G and NG	Operating force Newtons (grams)	Operating Life	Tactile Feeling	Travel mm
KMT 211 HF LFS	1.0 (100) ± 0.25	150,000	≥ 10%	0.15 ± 0.1
KMT 221 HF LFS	1.6 (160) ± 0.40	150,000	≥ 30%	0.15 ± 0.1

Electrical

	Silver
MAXIMUM POWER:	0.5 VA
MAXIMUM VOLTAGE:	32 VDC
MINIMUM VOLTAGE:	20 mV
MAXIMUM CURRENT DC:	50 mA
MINIMUM CURRENT DC:	1 mA
DIELECTRIC STRENGTH:	≥ 250 Vrms (1mn)
CONTACT RESISTANCE:	≤ 150 mΩ
INSULATION RESISTANCE:	≥ 50 MΩ
BOUNCE TIME:	≤ 6 ms

Environmental

	Silver
OPERATING TEMPERATURE:	-40˚C to 85˚C
STORAGE TEMPERATURE:	-55˚C (10 days) +85˚C (4 days)

Process

SOLDERING: This component is suited to the following methods:
– Infrared Reflow Soldering in accordance with IEC61760-1

Packaging

In reels of 4,000 pieces.
Dimensions of reels according to EIA 481B
External diameter 180 mm

NOTE: Specifications listed above are for switches with standard options.
For information on specific and custom switches, consult Customer Service Center.

Part Number Description

For any part number different from those listed above, please consult your local representative.

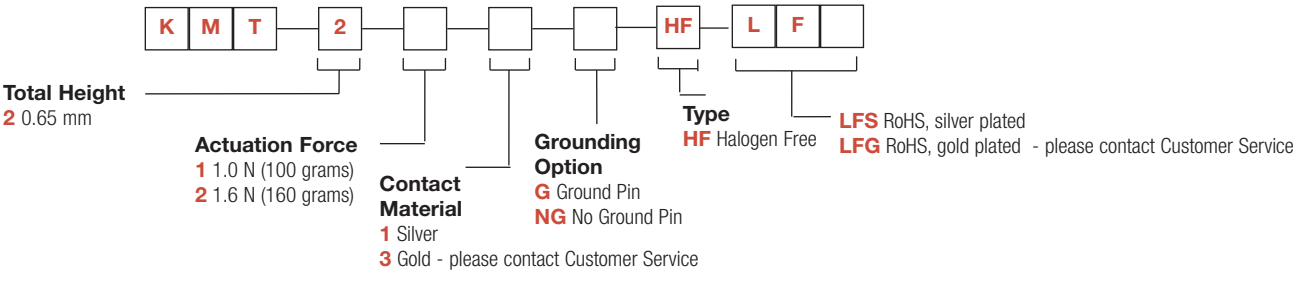

KMT Series – No Ground Pin

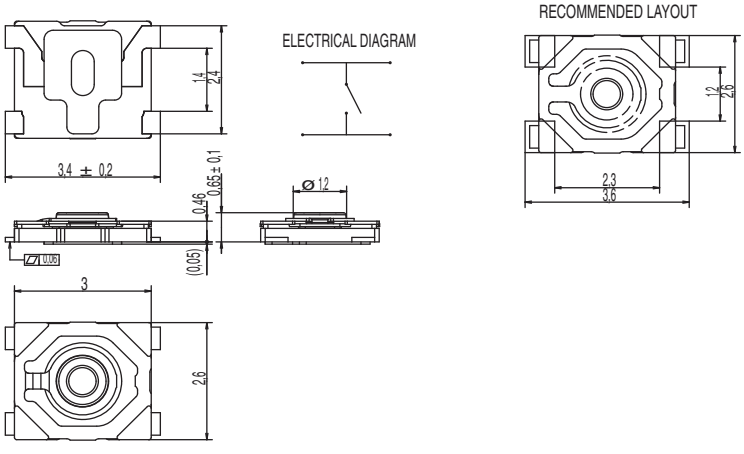

KMT Series – With Ground Pin

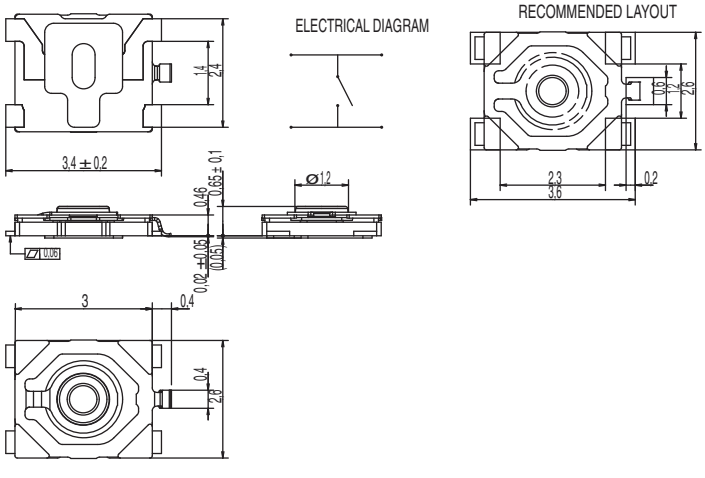

TAPE & REEL

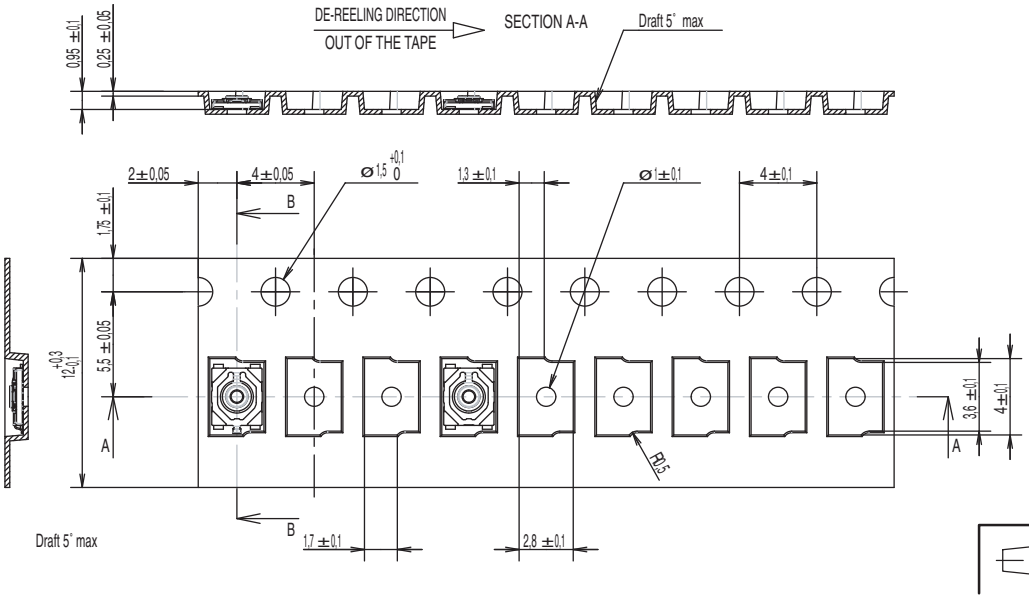

First Angle Projection

Dimensions are shown: mm
Specifications and dimensions subject to change

KMT0 Series
Nano-Miniature SMT Top Actuated

Features

- *Smallest footprint*
- *Smallest thickness with integrated actuator*
- *Extended life cycles*
- *IP68*
- *Ultra low current capabilities*

Typical Applications

- *Mobile Phones*
- *Hearing Aids*
- *MP3 accessories*
- *Bluetooth Headset*
- *Automotive keyless entry system*
- *Smoke and CO detectors*
- *E-readers*
- *Home automation remote controls*

Specification

FUNCTION: momentary action, normally open
CONTACT ARRANGEMENT: 1 make contact = SPST, N.O.
TERMINALS: J lead type for SMT

Mechanical

TRAVEL (mm): 0.15 ± 0.1

	Operating force Newtons (grams)	Tactile Feeling	Operating Life
KMT011NGJLHS	1.0 (100) ± 25%	≥ 10%	300,000
KMT021NGJLHS	1.6 (160) ± 25%	≥ 30%	300,000
KMT071NGJLHS	2.3 (230) ± 25%	≥ 30%	300,000
KMT031NGJLHS	3.4 (340) ± 25%	≥ 30%	300,000

	Operating force Newtons (grams)	Tactile Feeling	Operating Life
KMT012NGJLHS	1.0 (100) ± 25%	≥ 10%	1,000,000
KMT022NGJLHS	1.6 (160) ± 25%	≥ 30%	600,000
KMT072NGJLHS	2.3 (230) ± 25%	≥ 30%	600,000

Electrical

MAXIMUM POWER:	0.5 VA
MAXIMUM VOLTAGE:	32 VDC
MINIMUM VOLTAGE:	20 mV
MAXIMUM CURRENT DC:	50 mA
MINIMUM CURRENT DC:	1 mA
DIELECTRIC STRENGTH:	≥ 250 Vrms (1mn)
CONTACT RESISTANCE:	≤ 150 mΩ
INSULATION RESISTANCE:	≥ 50 MΩ
BOUNCE TIME:	≤ 6 ms

Environmental

OPERATING TEMPERATURE: -40˚C to 85˚C
STORAGE TEMPERATURE: -55˚C (10 days) +85˚C (4 days)

Process

SOLDERING: This component is suited to the following methods:
– Infrared Reflow Soldering in accordance with IEC61760-1

Packaging

In reels of 5,000 pieces.
Dimensions of reels according to EIA 481B
External diameter 180 mm

NOTE: Specifications listed above are for switches with standard options.
For information on specific and custom switches, consult Customer Service Center.

Part Number Description

For any part number different from those listed above, please consult your local representative.

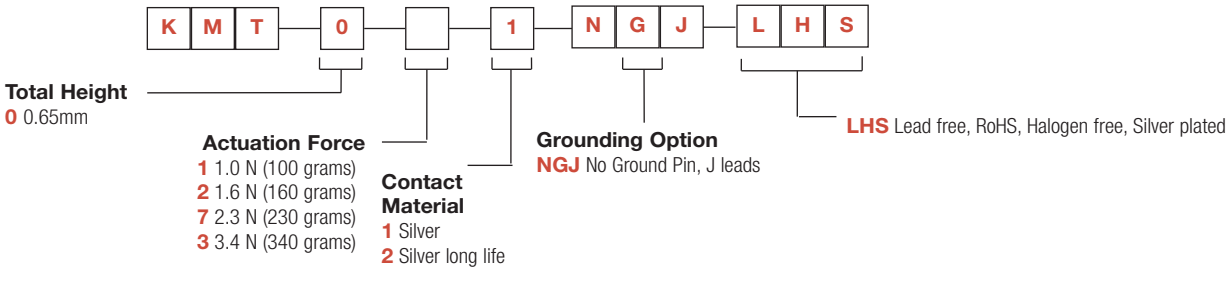

KMT0 Series
Nano-Miniature SMT Top Actuated

Minimum actuator diameter is 1.0 mm. It is recommended to enlarge this diameter to a full flat surface covering the switch.

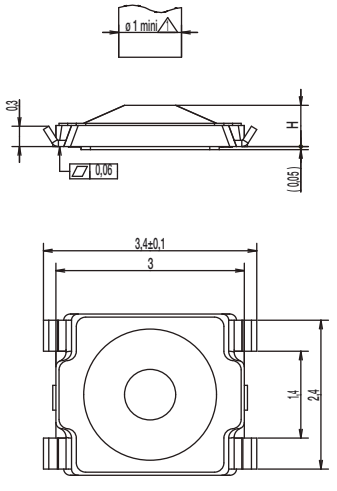

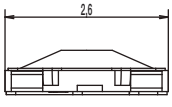

RECOMMENDED LAYOUT
ELECTRICAL DIAGRAM

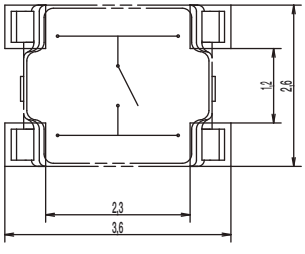

TAPE & REEL

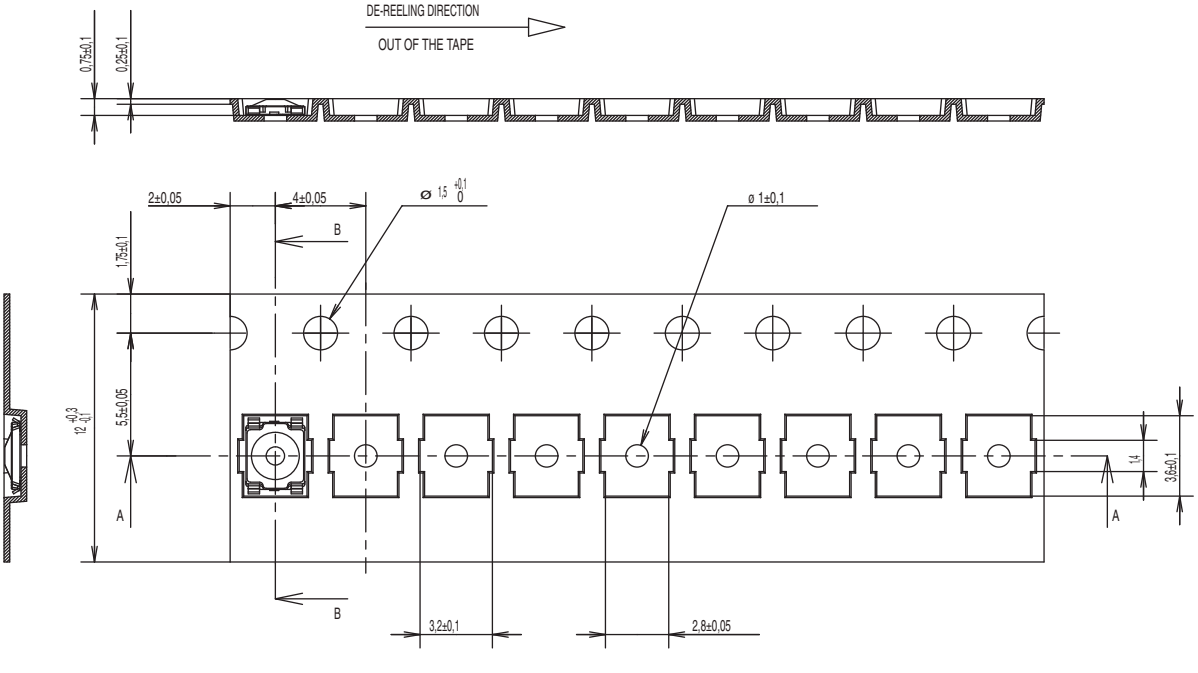

First Angle Projection

Dimensions are shown: mm
Specifications and dimensions subject to change

KMR 2 Series
Microminiature SMT Top Actuated

Features/Benefits

- ***Small footprint***
- ***4 actuation forces***
- ***Excellent tactile feel***
- ***Ultra low current capabilities***
- ***IP40***

Typical Applications

- ***Automotive***
- ***Industrial electronics***
- ***Medical equipment***

Specification

FUNCTION: momentary action
CONTACT ARRANGEMENT: 1 make contact = SPST, N.O.
TERMINALS: Gullwing type for SMT

Mechanical

Type G and NG See description below	Operating force N (grs)	Operating life (cycles)	Travel (mm)
KMR211 LFS	1.2 (120) ± 0.30	200,000	0.20 mm ± 0.1
KMR211 ULC LFS	1.2 (120) ± 0.30	200,000	0.20 mm ± 0.1
KMR213 LFG	1.2 (120) ± 0.30	200,000	0.20 mm ± 0.1
KMR213 ULC LFG	1.2 (120) ± 0.30	200,000	0.20 mm ± 0.1
KMR221 LFS	2.0 (200) ± 0.50	200,000	0.25 mm ± 0.1
KMR221 ULC LFS	2.0 (200) ± 0.50	200,000	0.25 mm ± 0.1
KMR223 LFG	2.0 (200) ± 0.50	200,000	0.25 mm ± 0.1
KMR223 ULC LFG	2.0 (200) ± 0.50	200,000	0.25 mm ± 0.1
KMR231 LFS	3.0 (300) ± 0.75	150,000	0.25 mm ± 0.1
KMR231 ULC LFS	3.0 (300) ± 0.75	150,000	0.25 mm ± 0.1
KMR232 LFS	3.0 (300) ± 0.75	300,000	0.25 mm ± 0.1
KMR232 ULC LFS	3.0 (300) ± 0.75	300,000	0.25 mm ± 0.1
KMR233 LFG	3.0 (300) ± 0.75	150,000	0.25 mm ± 0.1
KMR233 ULC LFG	3.0 (300) ± 0.75	150,000	0.25 mm ± 0.1
KMR241 LFS	4.0 (400) ± 1.00	100,000	0.30 mm ± 0.1
KMR241 ULC LFS	4.0 (400) ± 1.00	100,000	0.30 mm ± 0.1
KMR242 LFS	4.0 (400) ± 1.00	200,000	0.30 mm ± 0.1
KMR242 ULC LFS	4.0 (400) ± 1.00	200,000	0.30 mm ± 0.1
KMR243 LFG	4.0 (400) ± 1.00	100,000	0.30 mm ± 0.1
KMR243 ULC LFG	4.0 (400) ± 1.00	100,000	0.30 mm ± 0.1

Electrical

	Silver	Gold
MAXIMUM POWER:	1 VA	0.2 VA
MAXIMUM VOLTAGE:	32 VDC	32 VDC
MINIMUM VOLTAGE:	20 mVDC	20 mVDC
MAXIMUM CURRENT:	50 mA	10 mA
MINIMUM CURRENT:	1 mA*	1 mA*
DIELECTRIC STRENGTH:	≥ 250 Vrms	
CONTACT RESISTANCE:	≤ 100 mΩ	
INSULATION RESISTANCE:	≥ 1GΩ	
BOUNCE TIME:	≤ 3 ms	

*For ULC version minimum current is 1µA at 1.8 VDC

Environmental

	Silver	Gold
OPERATING TEMPERATURE:	-40˚C to 85˚C	-40˚C to 125˚C
STORAGE TEMPERATURE:	-55˚C to 85˚C	-55˚C to 125˚C

Process

Infrared Reflow Soldering in accordance with IEC61760-1

Packaging

In reels of 7,000 pieces
External diameter 330 mm ± 2 mm

NOTE: Specifications listed above are for switches with standard options.
For information on specific and custom switches, consult Customer Service Center.

TACTILE FEELING: KMR 2 series with actuation force in 2N - 3N - 4N: ≥ 30%
KMR 2 series with actuation force in 1.2N: ≥ 20%

Part Number Description

For any part number different from those listed above, please consult your local representative.

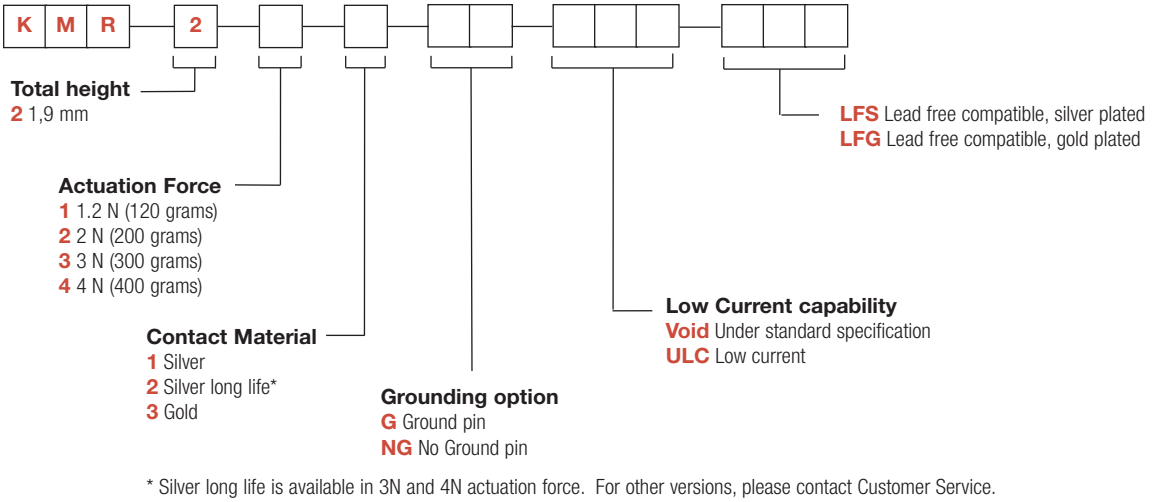

* Silver long life is available in 3N and 4N actuation force. For other versions, please contact Customer Service.

Dimensions are shown: mm
Specifications and dimensions subject to change

KMR 2 Series
Microminiature Tact Switch for SMT

KMR 2 Series - 1.9 mm height

PCB layout shown with ground pin option

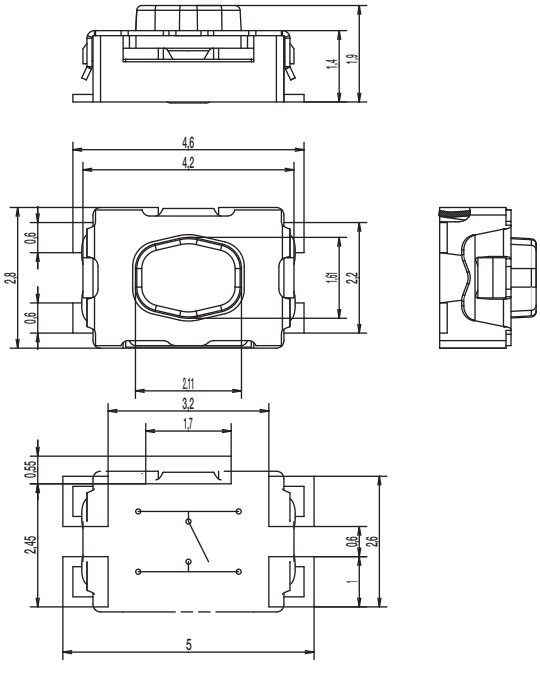

TAPE & REEL

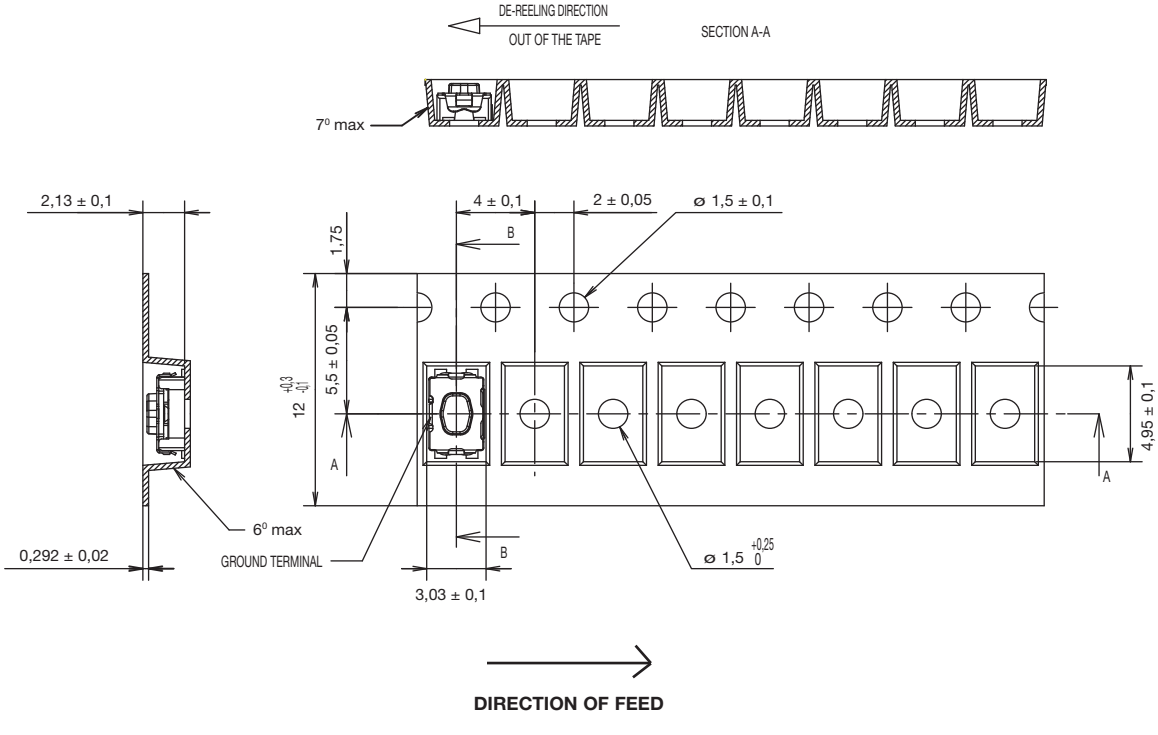

First Angle Projection

Dimensions are shown: mm
Specifications and dimensions subject to change

Features/Benefits

- ***Small footprint***
- ***4 actuation forces***
- ***Excellent tactile feel***
- ***Ultra low current capabilities***
- ***IP40***

Typical Applications

- ***Automotive***
- ***Industrial electronics***
- ***Medical equipment***

Specification

FUNCTION: momentary action
CONTACT ARRANGEMENT: 1 make contact = SPST, N.O.
TERMINALS: Gullwing type for SMT

Mechanical

Type G and NG See description below	Operating force N (grs)	Operating life (cycles)	Travel (mm)
KMR411 LFS	1.2 (120) ± 0.30	100,000	0.20 mm ± 0.1
KMR411 ULC LFS	1.2 (120) ± 0.30	100,000	0.20 mm ± 0.1
KMR413 LFG	1.2 (120) ± 0.30	100,000	0.20 mm ± 0.1
KMR413 ULC LFG	1.2 (120) ± 0.30	100,000	0.20 mm ± 0.1
KMR421 LFS	2.0 (200) ± 0.50	100,000	0.25 mm ± 0.1
KMR421 ULC LFS	2.0 (200) ± 0.50	100,000	0.25 mm ± 0.1
KMR423 LFG	2.0 (200) ± 0.50	100,000	0.25 mm ± 0.1
KMR423 ULC LFG	2.0 (200) ± 0.50	100,000	0.25 mm ± 0.1
KMR431 LFS	3.0 (300) ± 0.75	100,000	0.25 mm ± 0.1
KMR431 ULC LFS	3.0 (300) ± 0.75	100,000	0.25 mm ± 0.1
KMR432 LFS	3.0 (300) ± 0.75	300,000	0.25 mm ± 0.1
KMR432ULC LFS	3.0 (300) ± 0.75	300,000	0.25 mm ± 0.1
KMR433 LFG	3.0 (300) ± 0.75	100,000	0.25 mm ± 0.1
KMR433ULC LFG	3.0 (300) ± 0.75	100,000	0.25 mm ± 0.1
KMR441 LFS	4.0 (400) ± 1.00	100,000	0.30 mm ± 0.1
KMR441 ULC LFS	4.0 (400) ± 1.00	100,000	0.30 mm ± 0.1
KMR442 LFS	4.0 (400) ± 1.00	200,000	0.30 mm ± 0.1
KMR442 ULC LFS	4.0 (400) ± 1.00	200,000	0.30 mm ± 0.1
KMR443 LFG	4.0 (400) ± 1.00	100,000	0.30 mm ± 0.1
KMR443 ULC LFG	4.0 (400) ± 1.00	100,000	0.30 mm ± 0.1

Electrical

	Silver	Gold
MAXIMUM POWER:	1 VA	0.2 VA
MAXIMUM VOLTAGE:	32 VDC	32 VDC
MINIMUM VOLTAGE:	20 mVDC	20 mVDC
MAXIMUM CURRENT:	50 mA	10 mA
MINIMUM CURRENT:	1 mA*	1 mA*
DIELECTRIC STRENGTH:	≥ 250 Vrms	
CONTACT RESISTANCE:	≤ 100 mΩ	
INSULATION RESISTANCE:	≥ 1GΩ	
BOUNCE TIME:	≤ 3 ms	

*For ULC version minimum current is 1µA at 1.8 VDC

Environmental

	Silver	Gold
OPERATING TEMPERATURE:	-40˚C to 85˚C	-40˚C to 125˚C
STORAGE TEMPERATURE:	-55˚C to 85˚C	-55˚C to 125˚C

Process

Infrared Reflow Soldering in accordance with IEC61760-1

Packaging

In reels of 6,000 pieces
External diameter 330 mm ± 2 mm

NOTE: Specifications listed above are for switches with standard options.
For information on specific and custom switches, consult Customer Service Center.

TACTILE FEELING: KMR 4 series with actuation force in 2N - 3N - 4N: ≥ 25%
KMR 4 series with actuation force in 1.2N: ≥ 20%

Part Number Description

For any part number different from those listed above, please consult your local representative.

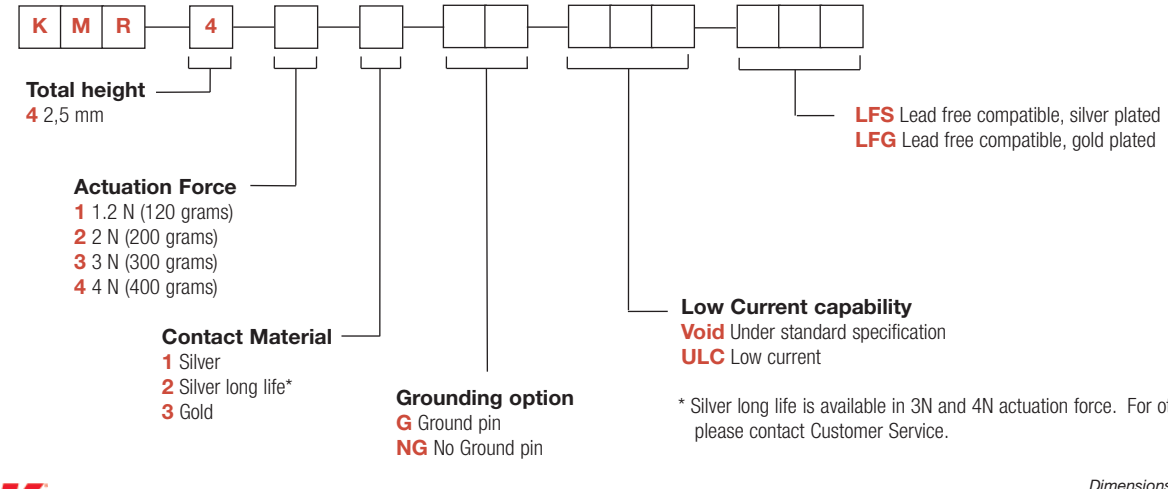

* Silver long life is available in 3N and 4N actuation force. For other versions, please contact Customer Service.

Dimensions are shown: mm
Specifications and dimensions subject to change

KMR 4 Series - 2.5 mm height

PCB layout shown with ground pin option

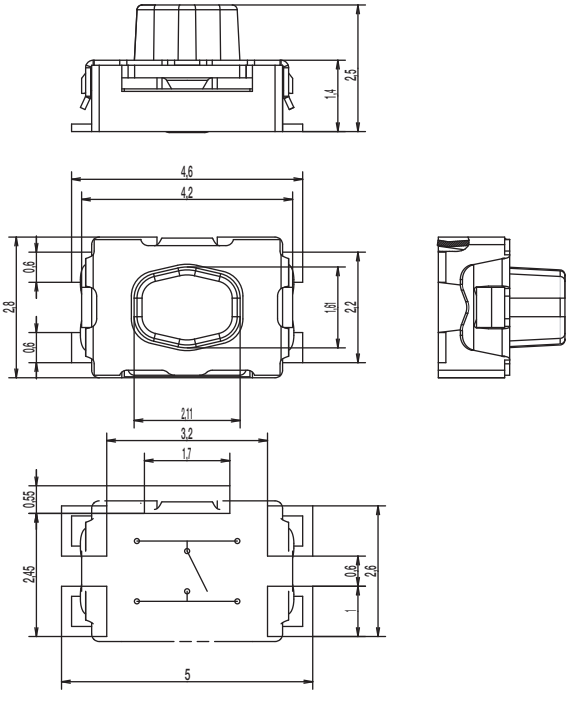

TAPE & REEL

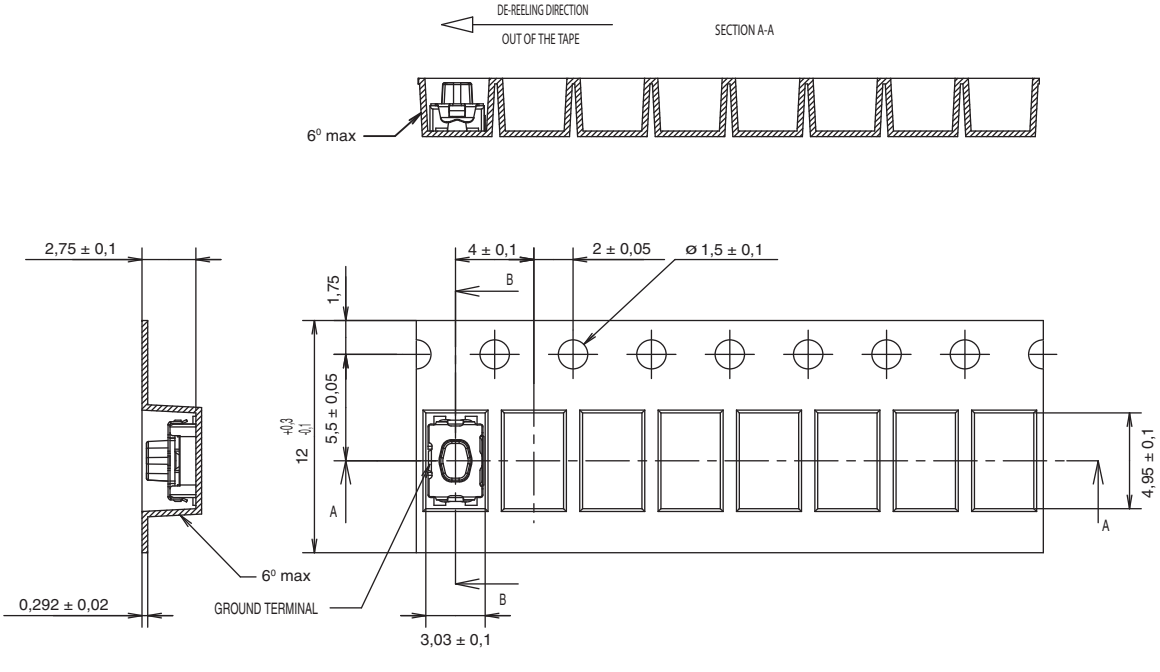

First Angle Projection

Dimensions are shown: mm
Specifications and dimensions subject to change

Features/Benefits

- *Watertight IP67*
- *Standard and long life versions*
- *No ground pin*
- *Ultra low current capabilities*
- *Excellent tactile feel*

Typical Applications

- *Automotive*
- *Medical*
- *Consumer*
- *Industrial*

Specification

FUNCTION: momentary action
CONTACT ARRANGEMENT: 1 make contact = SPST, N.O.
TERMINALS: Gullwing type for SMT

Mechanical

Type NG See description below	Operating force N (grs)	Operating life (cycles)	Travel (mm)
KMR611NG LFS	1.2 (120) ± 0.30	200,000	0.20 mm ± 0.1
KMR611NG ULC LFS	1.2 (120) ± 0.30	200,000	0.20 mm ± 0.1
KMR613NG LFG	1.2 (120) ± 0.30	200,000	0.20 mm ± 0.1
KMR613NG ULC LFG	1.2 (120) ± 0.30	200,000	0.20 mm ± 0.1
KMR621NG LFS	2.0 (200) ± 0.50	200,000	0.25 mm ± 0.1
KMR621NG ULC LFS	2.0 (200) ± 0.50	200,000	0.25 mm ± 0.1
KMR623NG LFG	2.0 (200) ± 0.50	200,000	0.25 mm ± 0.1
KMR623NG ULC LFG	2.0 (200) ± 0.50	200,000	0.25 mm ± 0.1
KMR631NG LFS	3.0 (300) ± 0.75	150,000	0.25 mm ± 0.1
KMR631NG ULC LFS	3.0 (300) ± 0.75	150,000	0.25 mm ± 0.1
KMR632NG LFS	3.0 (300) ± 0.75	300,000	0.25 mm ± 0.1
KMR632NG ULC LFS	3.0 (300) ± 0.75	300,000	0.25 mm ± 0.1
KMR633NG LFG	3.0 (300) ± 0.75	150,000	0.25 mm ± 0.1
KMR633NG ULC LFG	3.0 (300) ± 0.75	150,000	0.25 mm ± 0.1
KMR641NG LFS	4.0 (400) ± 1.00	100,000	0.30 mm ± 0.1
KMR641NG ULC LFS	4.0 (400) ± 1.00	100,000	0.30 mm ± 0.1
KMR642NG LFS	4.0 (400) ± 1.00	200,000	0.30 mm ± 0.1
KMR642NG ULC LFS	4.0 (400) ± 1.00	200,000	0.30 mm ± 0.1
KMR643NG LFG	4.0 (400) ± 1.00	100,000	0.30 mm ± 0.1
KMR643NG ULC LFG	4.0 (400) ± 1.00	100,000	0.30 mm ± 0.1

TACTILE FEELING: KMR 6 series with actuation force in 2N - 3N - 4N: ≥ 30%
KMR 6 series with actuation force in 1.2N: ≥ 20%

Electrical

	Silver	Gold
MAXIMUM POWER:	1 VA	0.2 VA
MAXIMUM VOLTAGE:	32 VDC	32 VDC
MINIMUM VOLTAGE:	20 mVDC	20 mVDC
MAXIMUM CURRENT:	50 mA	10 mA
MINIMUM CURRENT:	1 mA*	1 mA*
DIELECTRIC STRENGTH:	≥ 250 Vrms	
CONTACT RESISTANCE:	≤ 100 mΩ	
INSULATION RESISTANCE:	≥ 1GΩ	
BOUNCE TIME:	≤ 3 ms	

*For ULC version minimum current is 1µA at 1.8 VDC

Environmental

	Silver	Gold
OPERATING TEMPERATURE:	-40˚C to 85˚C	-40˚C to 125˚C
STORAGE TEMPERATURE:	-55˚C to 85˚C	-55˚C to 125˚C

Process

Infrared Reflow Soldering in accordance with IEC61760-1

Packaging

In reels of 7,000 pieces
External diameter 330 mm ± 2 mm

NOTE: Specifications listed above are for switches with standard options.
For information on specific and custom switches, consult Customer Service Center.

Part Number Description

For any part number different from those listed above, please consult your local representative.

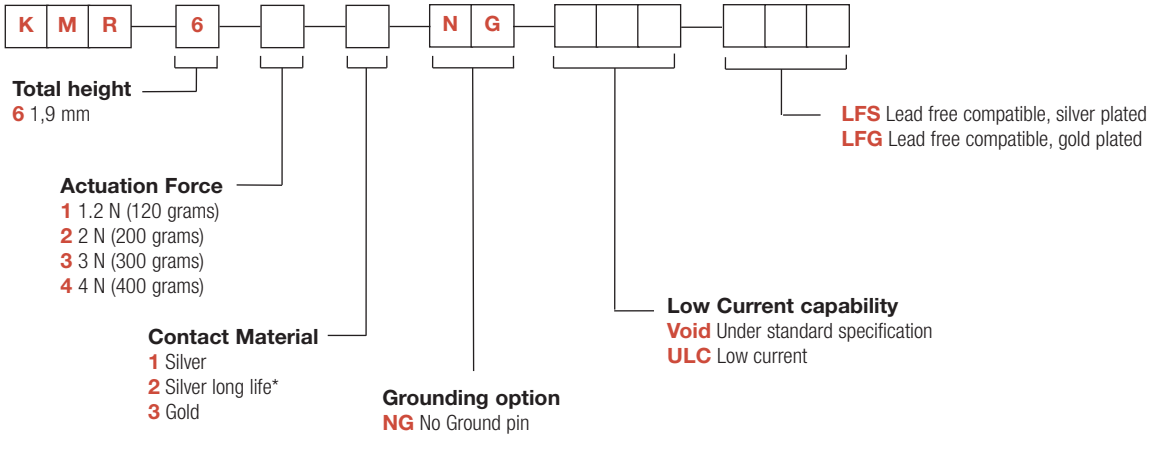

* Silver long life is available in 3N and 4N actuation force. For other versions, please contact Customer Service.

KMR 6 Series
Microminiature SMT Top Actuated IP67

KMR 6 Series - 1.9 mm height

PCB layout shown with ground pin option

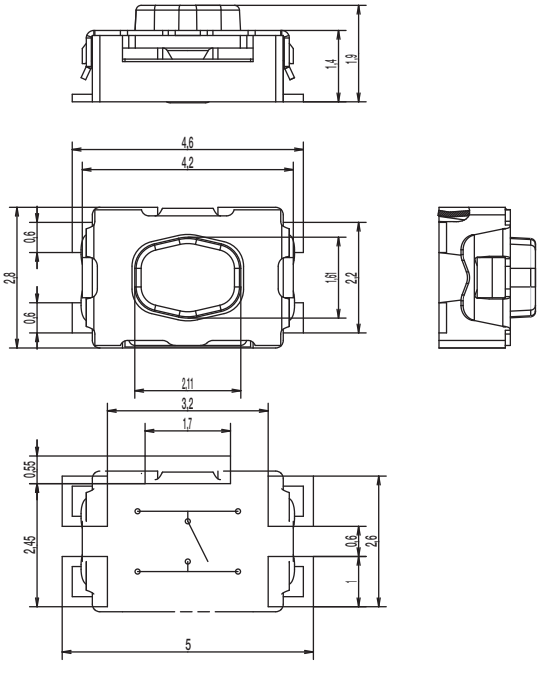

TAPE & REEL

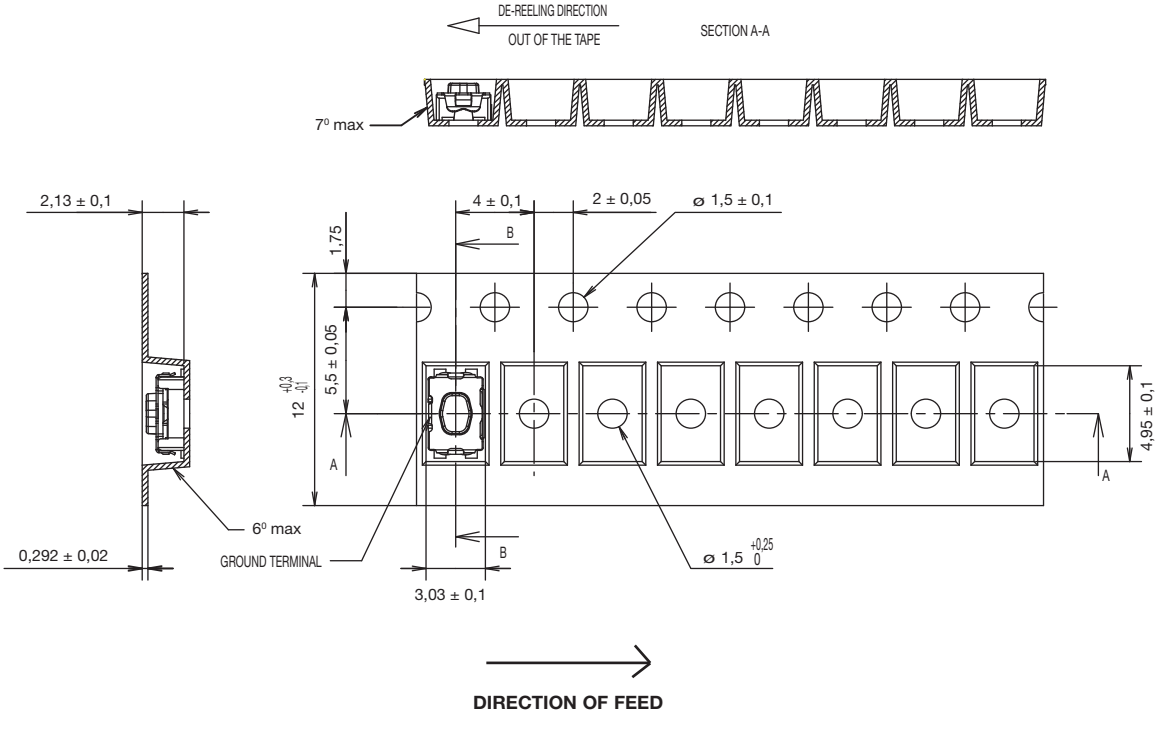

Features/Benefits

- *Watertight IP67*
- *Standard and long life versions*
- *No ground pin*
- *Ultra low current capabilities*
- *Excellent tactile feel*

Typical Applications

- *Automotive*
- *Medical*
- *Consumer*
- *Industrial*

Specification

FUNCTION: momentary action
CONTACT ARRANGEMENT: 1 make contact = SPST, N.O.
TERMINALS: Gullwing type for SMT

Mechanical

Type NG See description below	Operating force N (grs)	Operating life (cycles)	Travel (mm)
KMR711NG LFS	1.2 (120) ± 0.30	100,000	0.20 mm ± 0.1
KMR711NG ULC LFS	1.2 (120) ± 0.30	100,000	0.20 mm ± 0.1
KMR713NG LFG	1.2 (120) ± 0.30	100,000	0.20 mm ± 0.1
KMR713NG ULC LFG	1.2 (120) ± 0.30	100,000	0.20 mm ± 0.1
KMR721NG LFS	2.0 (200) ± 0.50	100,000	0.25 mm ± 0.1
KMR721NG ULC LFS	2.0 (200) ± 0.50	100,000	0.25 mm ± 0.1
KMR723NG LFG	2.0 (200) ± 0.50	100,000	0.25 mm ± 0.1
KMR723NG ULC LFG	2.0 (200) ± 0.50	100,000	0.25 mm ± 0.1
KMR731NG LFS	3.0 (300) ± 0.75	100,000	0.25 mm ± 0.1
KMR731NG ULC LFS	3.0 (300) ± 0.75	100,000	0.25 mm ± 0.1
KMR732NG LFS	3.0 (300) ± 0.75	300,000	0.25 mm ± 0.1
KMR732NG ULC LFS	3.0 (300) ± 0.75	300,000	0.25 mm ± 0.1
KMR733NG LFG	3.0 (300) ± 0.75	100,000	0.25 mm ± 0.1
KMR733NG ULC LFG	3.0 (300) ± 0.75	100,000	0.25 mm ± 0.1
KMR741NG LFS	4.0 (400) ± 1.00	100,000	0.30 mm ± 0.1
KMR741NG ULC LFS	4.0 (400) ± 1.00	100,000	0.30 mm ± 0.1
KMR742NG LFS	4.0 (400) ± 1.00	200,000	0.30 mm ± 0.1
KMR742NG ULC LFS	4.0 (400) ± 1.00	200,000	0.30 mm ± 0.1
KMR743NG LFG	4.0 (400) ± 1.00	100,000	0.30 mm ± 0.1
KMR743NG ULC LFG	4.0 (400) ± 1.00	100,000	0.30 mm ± 0.1

Electrical

	Silver	Gold
MAXIMUM POWER:	1 VA	0.2 VA
MAXIMUM VOLTAGE:	32 VDC	32 VDC
MINIMUM VOLTAGE:	20 mVDC	20 mVDC
MAXIMUM CURRENT:	50 mA	10 mA
MINIMUM CURRENT:	1 mA*	1 mA*
DIELECTRIC STRENGTH:	≥ 250 Vrms	
CONTACT RESISTANCE:	≤ 100 mΩ	
INSULATION RESISTANCE:	≥ 1GΩ	
BOUNCE TIME:	≤ 3 ms	

*For ULC version minimum current is 1µA at 1.8 VDC

Environmental

	Silver	Gold
OPERATING TEMPERATURE:	-40°C to 85°C	-40°C to 125°C
STORAGE TEMPERATURE:	-55°C to 85°C	-55°C to 125°C

Process

Infrared Reflow Soldering in accordance with IEC61760-1

Packaging

In reels of 6,000 pieces
External diameter 330 mm ± 2 mm

NOTE: Specifications listed above are for switches with standard options.
For information on specific and custom switches, consult Customer Service Center.

TACTILE FEELING: KMR 7 series with actuation force in 2N - 3N - 4N: ≥ 25%
KMR 7 series with actuation force in 1.2N: ≥ 20%

Part Number Description

For any part number different from those listed above, please consult your local representative.

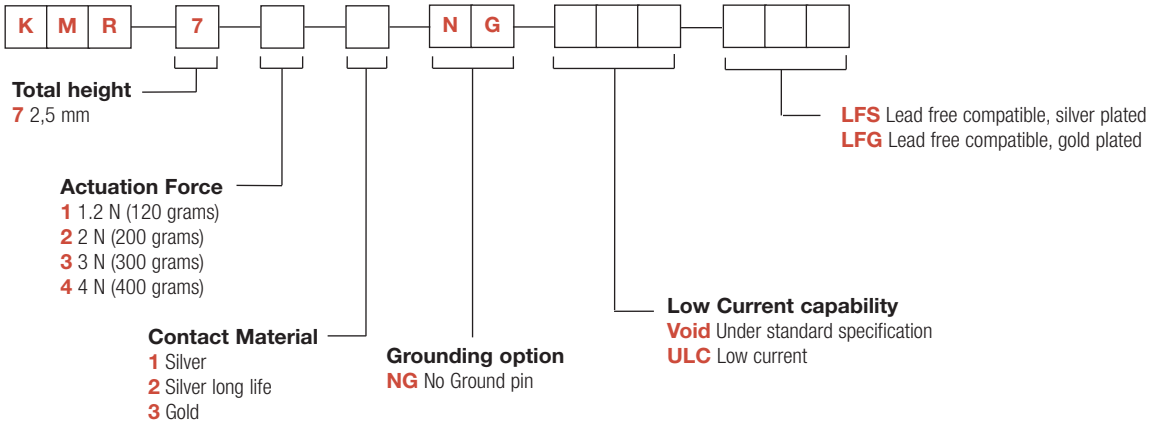

* Silver long life is available in 3N and 4N actuation force. For other versions, please contact Customer Service.

Dimensions are shown: mm
Specifications and dimensions subject to change

KMR 7 Series - 2.5 mm height

PCB layout shown with ground pin option

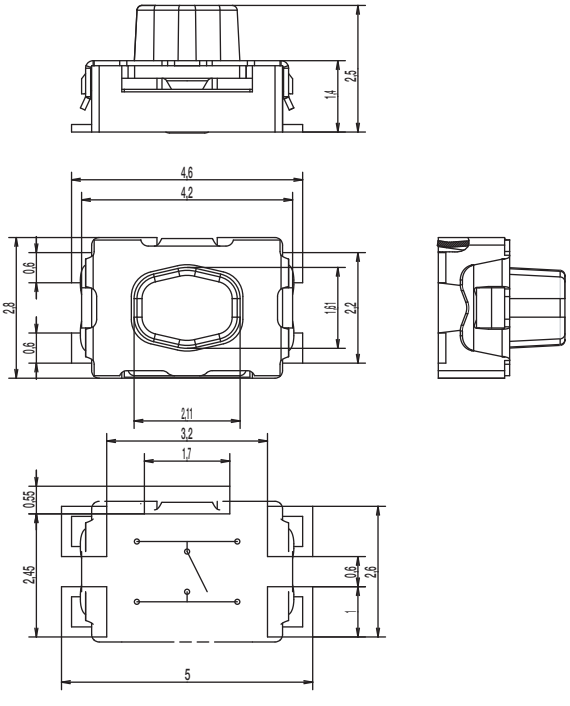

TAPE & REEL

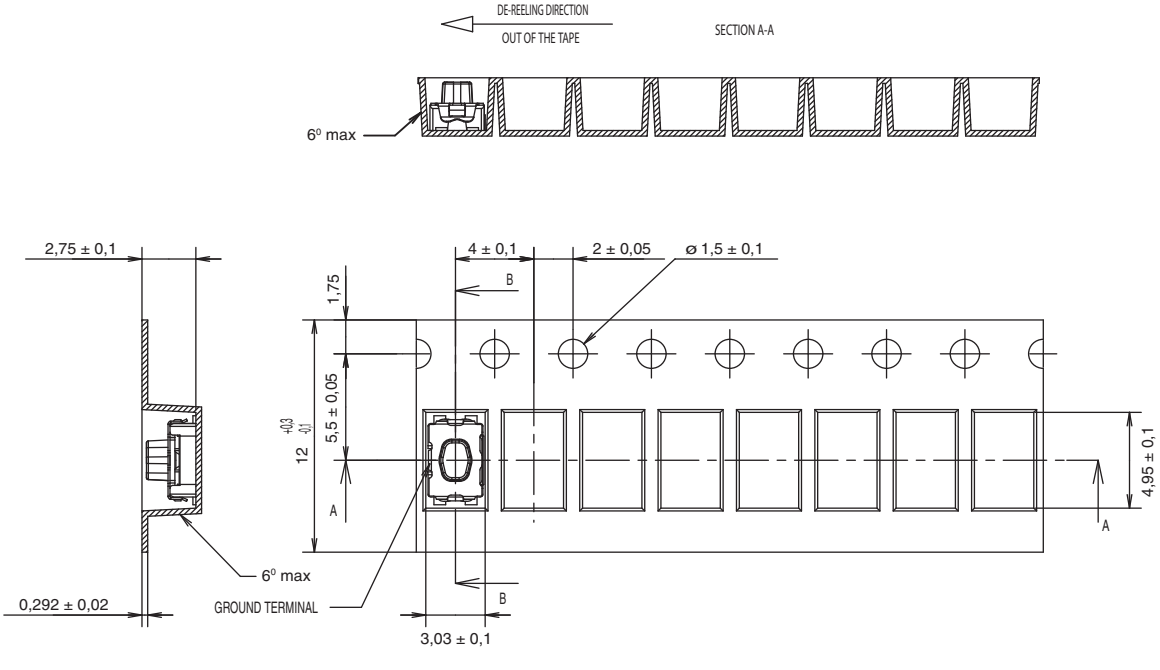

Features/Benefits

- *Small footprint*
- *3 actuation forces*
- *Excellent tactile feel*
- *Hard actuator*
- *IP40*

Typical Applications

- *Automotive*
- *Mobile phones*
- *Industrial electronics*
- *Medical equipment*

Specification

FUNCTION: momentary action
CONTACT ARRANGEMENT: 1 make contact = SPST, N.O.
TERMINALS: Gullwing type for SMT

Mechanical

Type G and NG See description below	Operating force N (grs)	Operating life (cycles)	Travel (mm)
KMR811G LFS	1.2 (120) ± 0.30	200,000	0.20 mm ± 0.1
KMR821G LFS	2.0 (200) ± 0.50	200,000	0.25 mm ± 0.1
KMR831G LFS	3.0 (300) ± 0.75	150,000	0.25 mm ± 0.1
KMR831NG ULC LFS	3.0 (300) ± 0.75	150,000	0.25 mm ± 0.1

TACTILE FEELING:

KMR 8 series with actuation force in 2N - 3N - 4N: ≥ 30%
KMR 8 series with actuation force in 1.2N: ≥ 20%

Electrical

	Silver
MAXIMUM POWER:	1 VA
MAXIMUM VOLTAGE:	32 VDC
MINIMUM VOLTAGE:	20 mVDC
MAXIMUM CURRENT:	50 mA
MINIMUM CURRENT:	1 mA*
DIELECTRIC STRENGTH:	≥ 250 Vrms
CONTACT RESISTANCE:	≤ 100 mΩ
INSULATION RESISTANCE:	≥ 1GΩ
BOUNCE TIME:	≤ 3 ms

*For ULC version minimum current is 1µA at 1.8 VDC

Environmental

	Silver
OPERATING TEMPERATURE:	-40˚C to 85˚C
STORAGE TEMPERATURE:	-55˚C to 85˚C

Process

Infrared Reflow Soldering in accordance with IEC61760-1

Packaging

In reels of 7,000 pieces
External diameter 330 mm ± 2 mm

NOTE: Specifications listed above are for switches with standard options.
For information on specific and custom switches, consult Customer Service Center.

Part Number Description

For any part number different from those listed above, please consult your local representative.

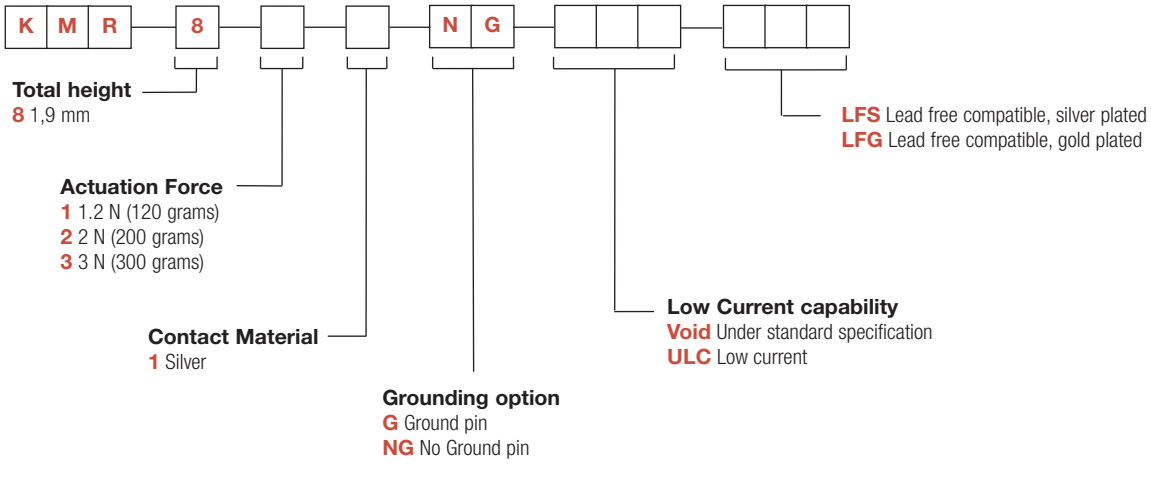

KMR 8 Series
Microminiature SMT Top Actuated

G - Ground Pin

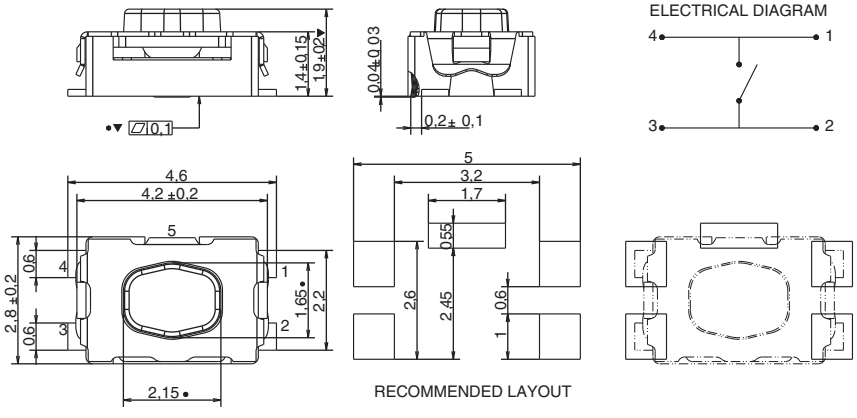

NG - No Ground Pin

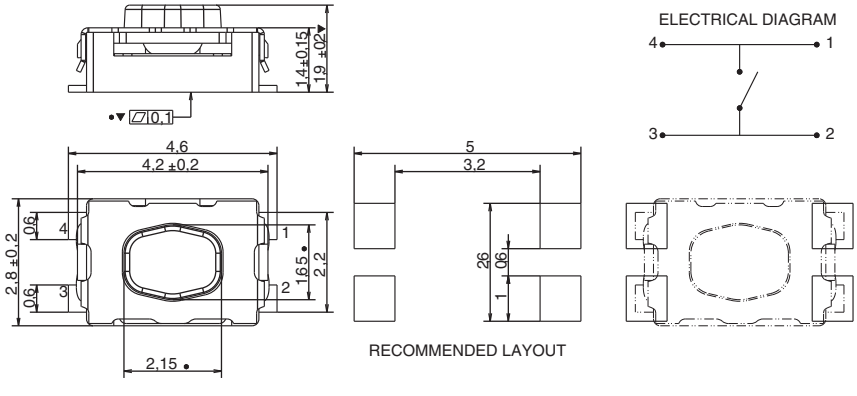

TAPE & REEL

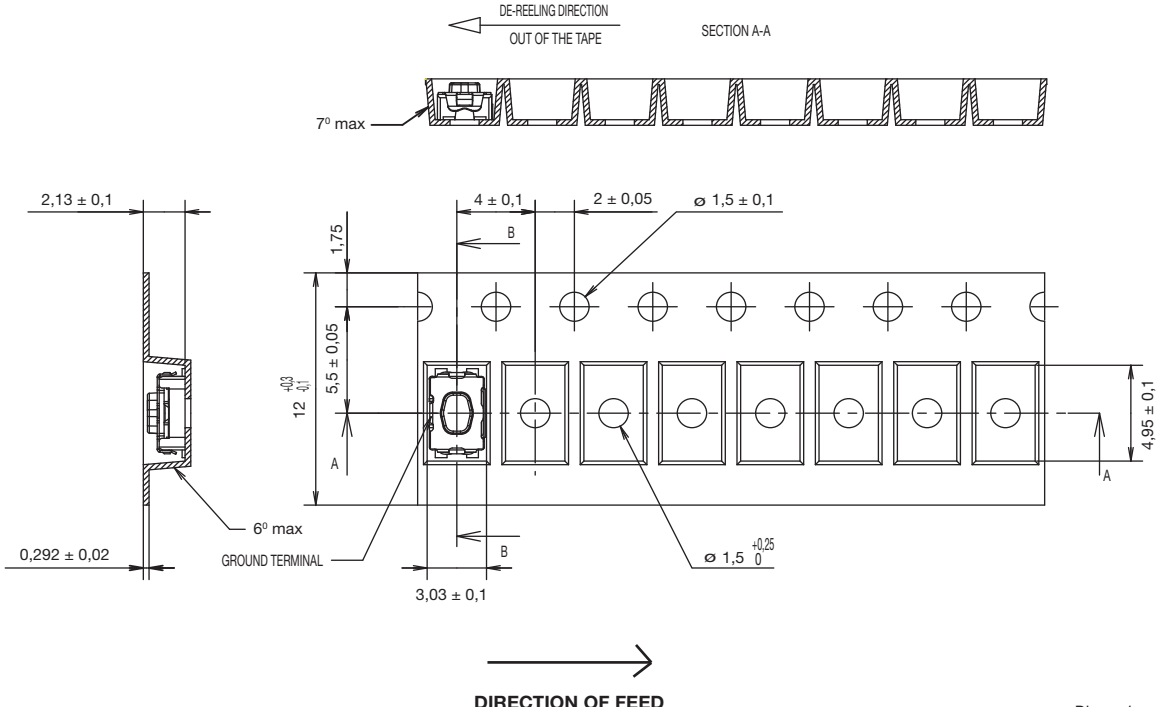

Dimensions are shown: mm
Specifications and dimensions subject to change

Features/Benefits

- *Compact size*
- *Excellent tactile feel*
- *ESD protection*
- *Positioning pegs for stability*
- *RoHS compliant and compatible*

Typical Applications

- *Mobile phones*
- *Medical handheld monitors*
- *Consumer electronics*
- *Telecommunication networks*

Specification

FUNCTION: Momentary
CONTACT ARRANGEMENT: SPST, N.O.
TERMINALS: Gullwing type for SMT
IP40 Sealed

Mechanical

OVERLOAD: 20N
TACTILE FEELING: 15% min. for the 2N version
25% min for the 2.5N version

Type	Operating force Newtons (grams)	Operating life (operations)	Travel
KMS221G/GP	2N (200) ± 0.5	100 K cycles	0,25 ± 0,15
KMS223G/GP	2N (200) ± 0.5	100 K cycles	0,25 ± 0,15
KMS231G/GP	3N (300) ± 0.6	100 K cycles	0,3 ± 0,15
KMS233G/GP	3N (300) ± 0.6	100 K cycles	0,3 ± 0,15

Note: Specifications listed above are for switches with standard options. For information on specific and custom switches, consult Customer Service Center.

Packaging

Tape and reels in reels of 3,000 pieces.
External diameter 330mm ± 2mm.

Electrical

	Silver	Gold
MAXIMUM POWER:	1 VA	0.2 VA
MAXIMUM VOLTAGE:	32 VDC	32 VDC
MAXIMUM CURRENT DC:	50 mA	10 mA
MINIMUM CURRENT DC:	1 mA	1 mA

DIELECTRIC STRENGTH: 250 VDC
CONTACT RESISTANCE: ≤100 mΩ
INSULATION RESISTANCE: 10^9 Ω
BOUNCE TIME: ≤ 3 ms

Environmental

	Silver	Gold
OPERATING TEMPERATURE:	-40˚C to 85˚C	-40˚C to 125˚C
STORAGE TEMPERATURE:	-55˚C to 85˚C	-55˚C to 125˚C

Process

Infared reflow soldering in accordance with IEC 61760-1

How To Order

Our easy build-a-switch concept allows you to mix and match options to create the switch you need. To order, select desired option from each category and place it in the appropriate box.

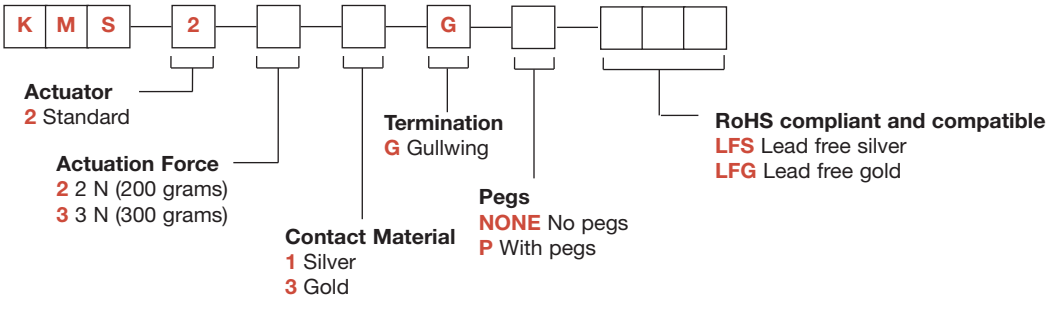

KMS Series
Microminiature SMT Side Actuated

KMS

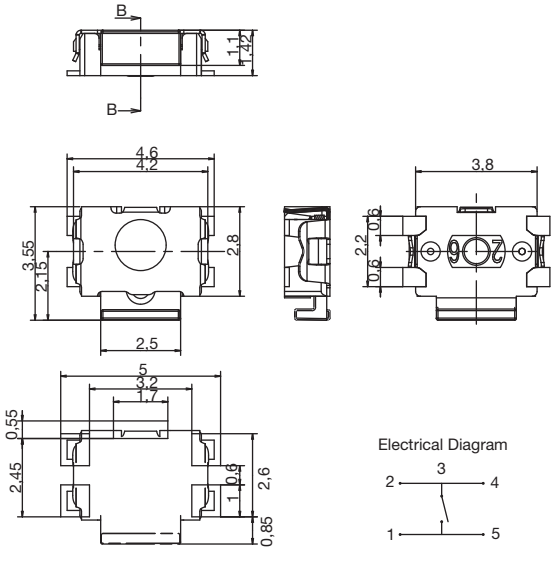

KMS WITH PEGS

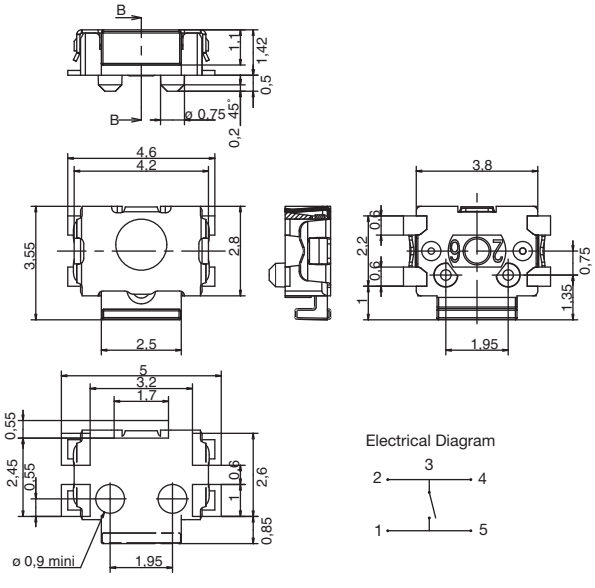

TAPE & REEL

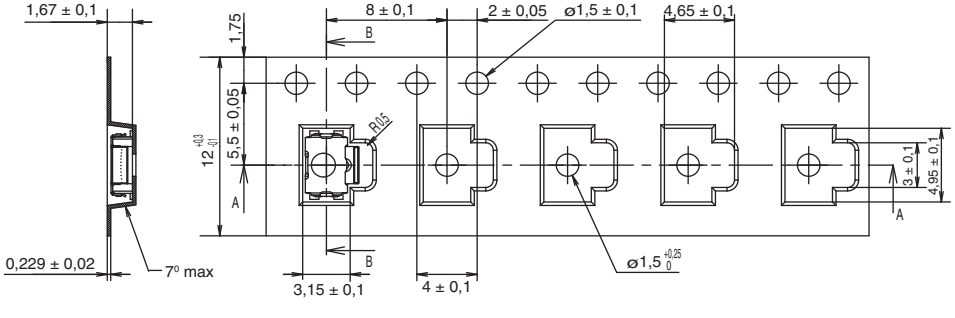

WITH PEGS

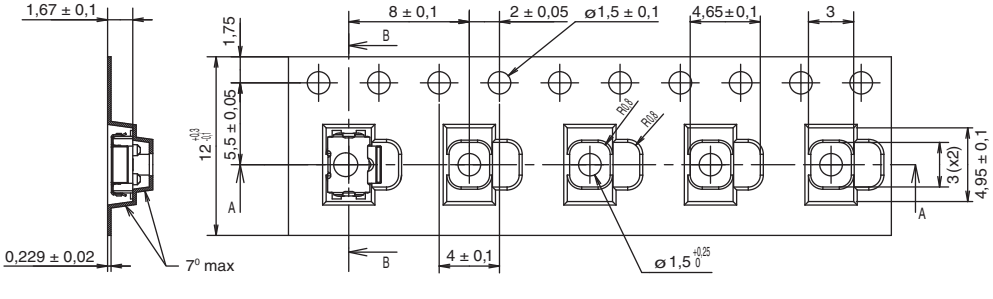

DIRECTION OF FEED

First Angle Projection

Dimensions are shown: mm
Specifications and dimensions subject to change

PTS 525 Series
Microminiature Tact Switch for SMT

Features/Benefits

- ***0.8 & 1.5 mm actuator height***
- ***Ruggedized package in a compact size***
- ***High number of cycles***

Typical Applications

- ***Consumer products***
- ***Instrumentation***
- ***Remote controls***

Specification

FUNCTION: Momentary action
CONTACT ARRANGEMENT: 1 make contact = SPST, N.O.

Electrical

MAXIMUM VOLTAGE:	15 VDC
MAXIMUM CURRENT DC:	20 mA
DIELECTRIC STRENGTH:	250 VA C (1mn)
CONTACT RESISTANCE:	≤ 100 mΩ
INSULATION RESISTANCE:	≥ 100 MΩ
BOUNCE TIME:	≤ 10 ms

Environmental

OPERATING TEMPERATURE: -20˚C to 70˚C

Process

SOLDERING: This component is suited to the following methods:
Infrared Reflow Soldering in accordance with IEC61760-1

Packaging

Switches in reels of:
5,000 pieces in 0.8 mm height
4,000 pieces in 1.5 mm height
Dimensions of reels according to EIA 481B
External diameter 330 mm

NOTE: Specifications listed above are for switches with standard options.
For information on specific and custom switches, consult Customer Service Center.

How To Order

Please see chart below for full part numbers.

Part Number	Height (mm)	Leads Shape	Ground Pin	Force	Travel (mm)	Operating Life
PTS525 SM08 SMTR 2 LFS	0.8	G	No	160 gf ± 50 gf	0.25 ± 0.2	1,000,000
PTS525 SK08 SMTR 2 LFS	0.8	G	No	260 gf ± 50 gf	0.25 ± 0.2	200,000
PTS525 SM15 SMTR 2 LFS	1.5	G	No	160 gf ± 50 gf	0.25 ± 0.2	1,000,000
PTS525 SK15 SMTR 2 LFS	1.5	G	No	260 gf ± 50 gf	0.25 ± 0.2	500,000
PTS525 SMG15 SMTR 2 LFS	1.5	G	Yes	160 gf ± 50 gf	0.25 ± 0.2	1,000,000
PTS525 SKG15 SMTR 2 LFS	1.5	G	Yes	260 gf ± 50 gf	0.25 ± 0.2	500,000
PTS525 SMG15J SMTR 2 LFS	1.5	J	Yes	160 gf ± 50 gf	0.25 ± 0.2	1,000,000
PTS525 SKG15J SMTR 2 LFS	1.5	J	Yes	260 gf ± 50 gf	0.25 ± 0.2	500,000

First Angle Projection

Dimensions are shown: mm
Specifications and dimensions subject to change

PTS 525 Series
Microminiature Tact Switch for SMT

PTS525 SM08 SMTR2 LFS
PTS525 SK08 SMTR2 LFS

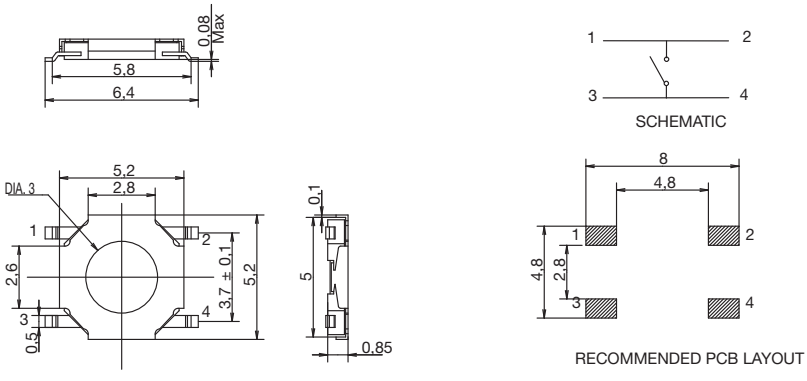

PTS525 SM15 SMTR2 LFS
PTS525 SK15 SMTR2 LFS

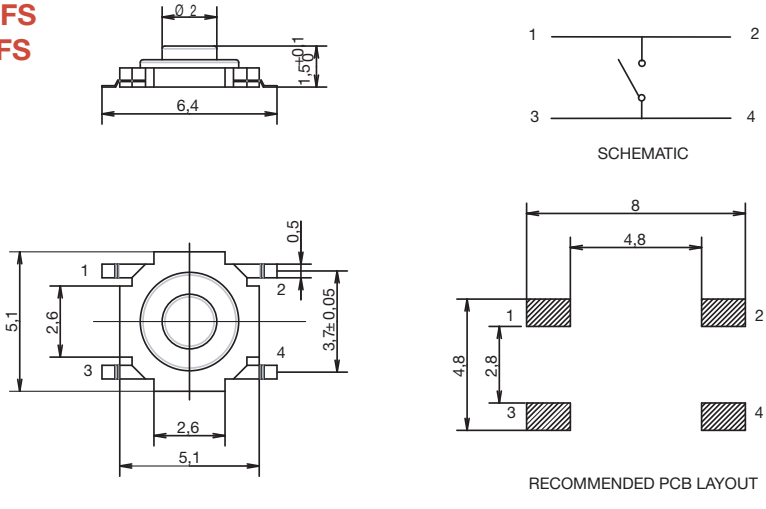

PTS525 SMG15 SMTR2 LFS
PTS525 SKG15 SMTR2 LFS

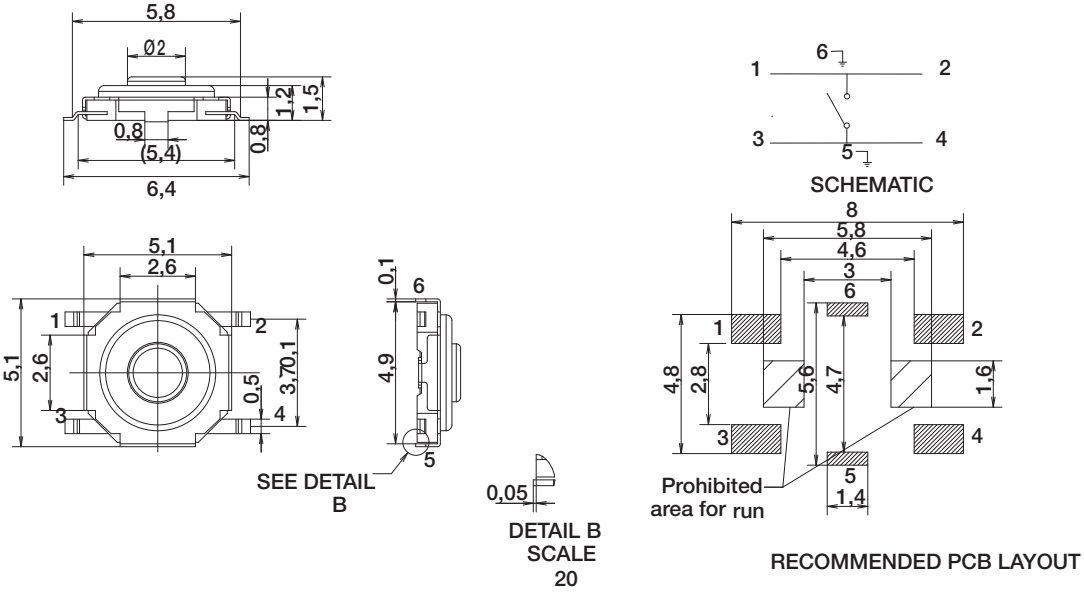

Dimensions are shown: mm
Specifications and dimensions subject to change

PTS525 SMG15J SMTR2 LFS
PTS525 SKG15J SMTR2 LFS

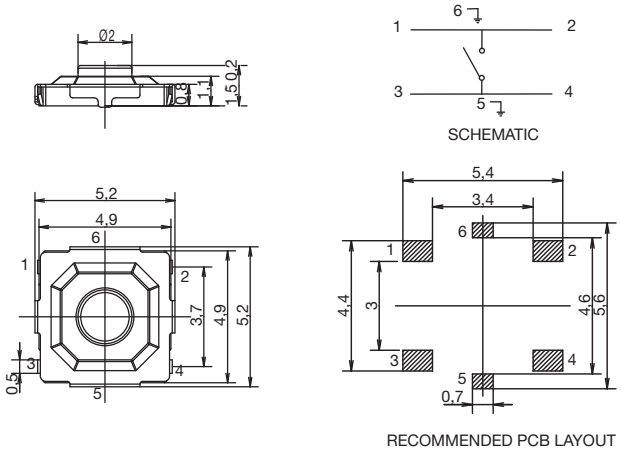

TAPE & REEL

0.8 mm height
5,000 pieces per reel

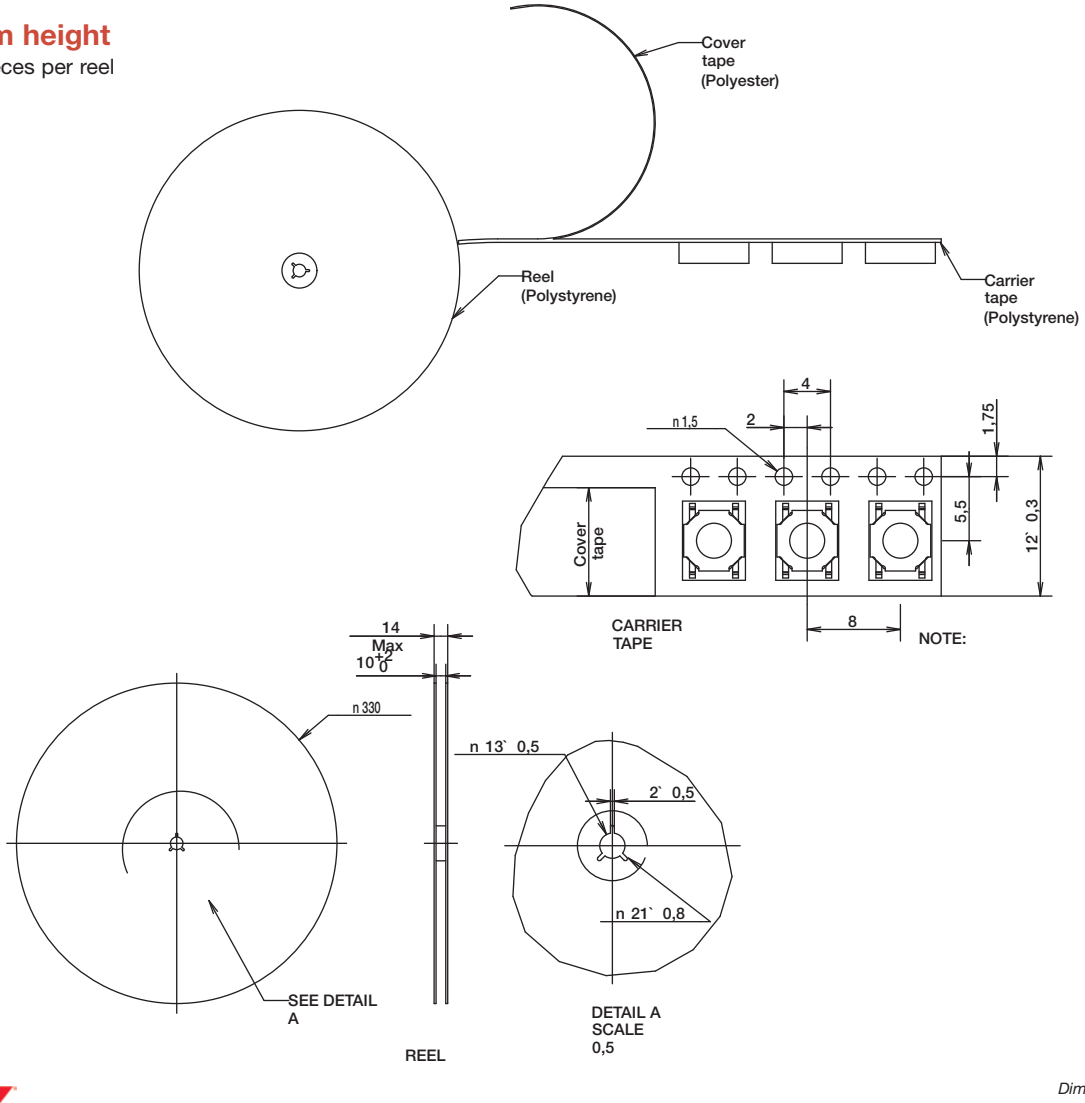

TAPE & REEL

1.5 mm height

4,000 pieces per reel

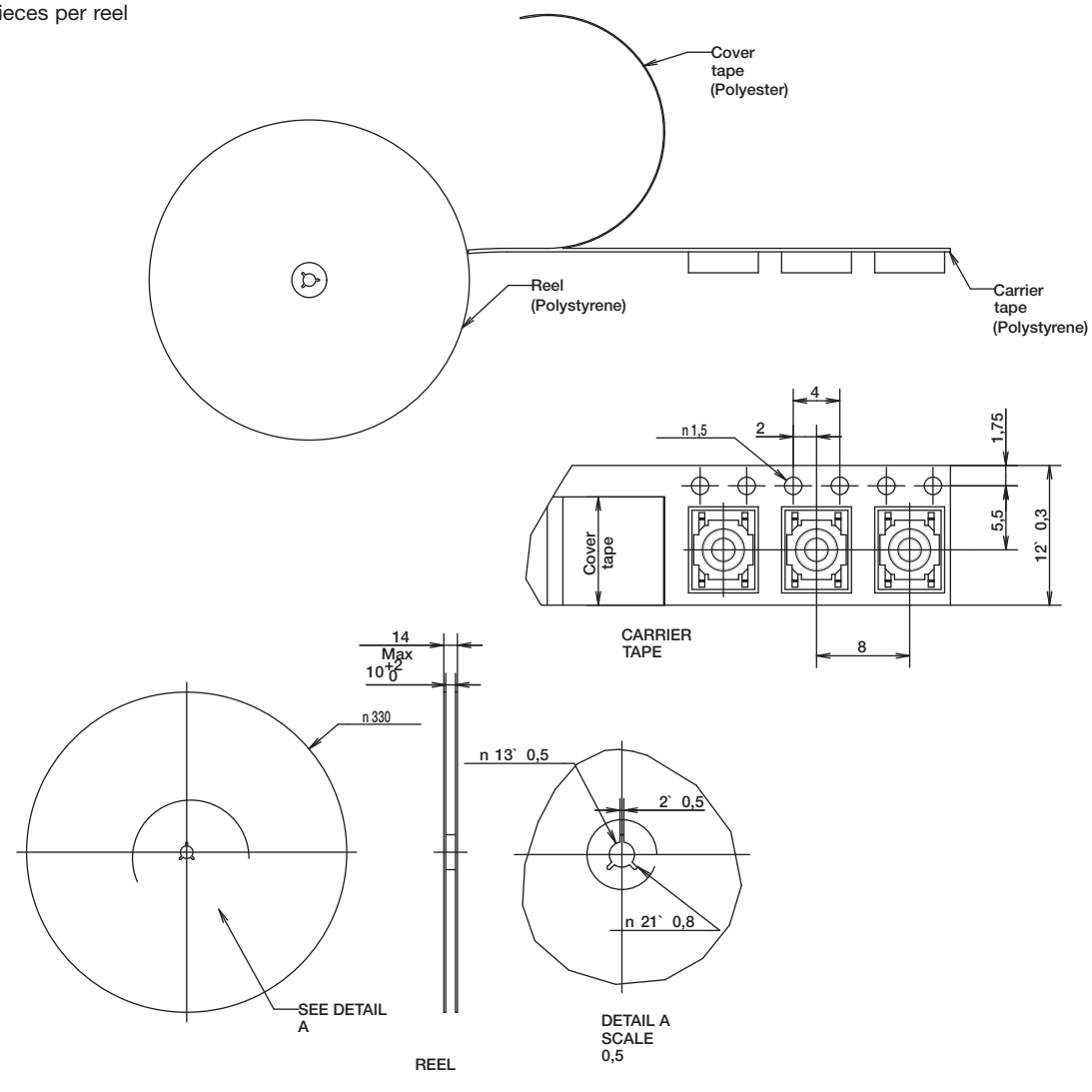

First Angle Projection

Dimensions are shown: mm
Specifications and dimensions subject to change

PTS 530 Series
Ultra Low Profile SMT Top Actuated

Features/Benefits

- ***4.5 x 4.5 mm footprint***
- ***0.55 mm thickness***
- ***High number of cycles***
- ***Symbol line identification***

Typical Applications

- ***MP3 accessories***
- ***Bluetooth headset***
- ***Remote controls***
- ***Garage door opener***

Specifications

FUNCTION: momentary action
CONTACT ARRANGEMENT: 1 make contact = SPST N.O.
TERMINALS: Gullwing for SMT
TRAVEL: 0.2mm - 0.1 /+ 0.15mm

Part Number	Operating Force (gf)	Operating Life (operations)
PTS530 GN055 SMTR LFS	100 ± 30	1,000,000
PTS530 GM055 SMTR LFS	160 ± 30	1,000,000
PTS530 GH055 SMTR LFS	200 ± 30	200,000
PTS530 GK055 SMTR LFS	260 ± 30	200,000
PTS530 GG065 SMTR LFS	400 ± 70	300,000
PTS530 GS065 SMTR LFS	600 - 50/+100	150,000

Electrical

MAXIMUM VOLTAGE: 12 VDC
MAXIMUM CURRENT DC: 50 mA
DIELECTRIC STRENGTH: 250 VA C (1mn)
CONTACT RESISTANCE: ≤ 100 mΩ
INSULATION RESISTANCE: ≥ 100 MΩ
BOUNCE TIME: ≤ 10 ms

Environmental

OPERATING TEMPERATURE: -40˚C to 85˚C

Process

SOLDERING: This component is suited to the following methods:
Infrared Reflow Soldering in accordance with IEC61760-1

Packaging

Switches in reels of 7,000 pieces.
Dimensions of reels according to EIA 481B
External diameter 330 mm

NOTE: Specifications listed above are for switches with standard options.
For information on specific and custom switches, consult Customer Service Center.

How To Order

Our easy build-a-switch concept allows you to mix and match options to create the switch you need. To order, select desired option from each category and place it in the appropriate box.

For any part number different from those listed above, please consult your local representative.

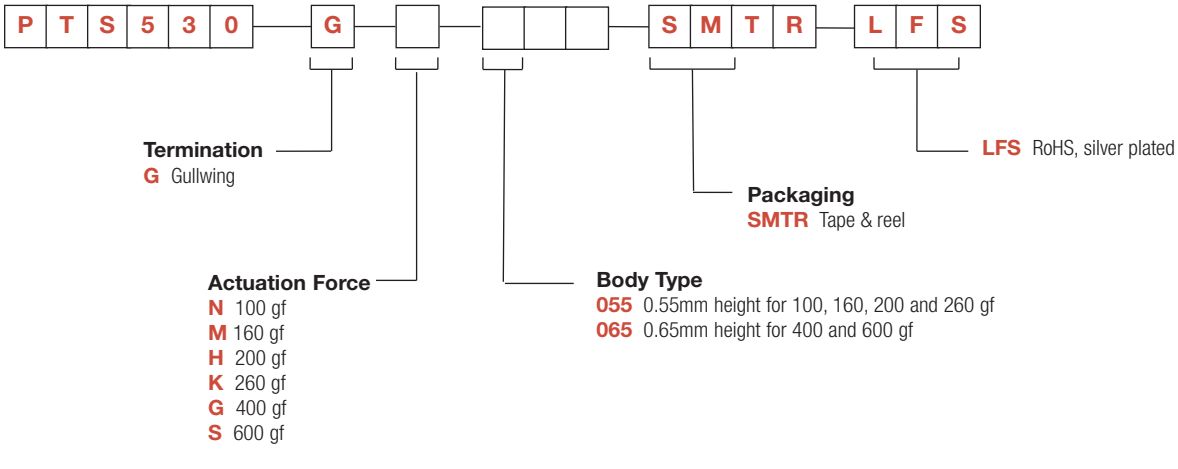

PTS 530 Series
Ultra Low Profile SMT Top Actuated

TERMINATION

G GULLWING

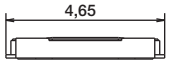

BODY TYPE / ACTUATION FORCE

055 0,55 MM HEIGHT

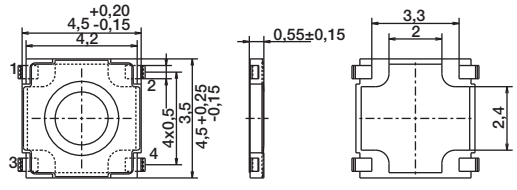

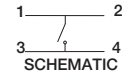

SCHEMATIC

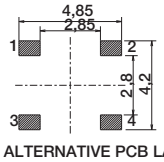

ALTERNATIVE PCB LAYOUT

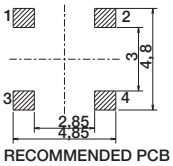

RECOMMENDED PCB LAYOUT

065 0,65 MM HEIGHT

PART NUMBER	HEIGHT $^{+0.1}_{-0.05}$
PTS 530 GS 065 SMTR LFS	0.72
PTS 530 GG 065 SMTR LFS	0.68

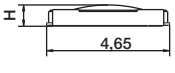

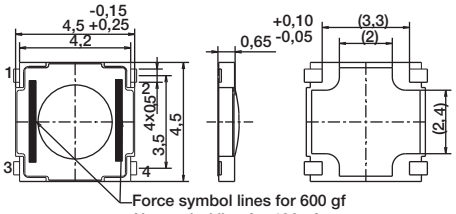

Force symbol lines for 600 gf
No symbol line for 400 gf

Restriction in operation

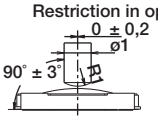

Actuation force identification lines:

N: 100 gf	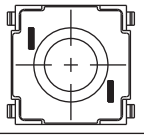
M: 160 gf	No Lines
H: 200 gf	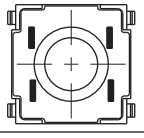
K: 260 gf	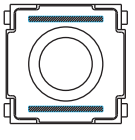

G: 400 gf	No Lines
S: 600 gf	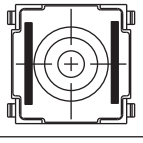

TAPE & REEL

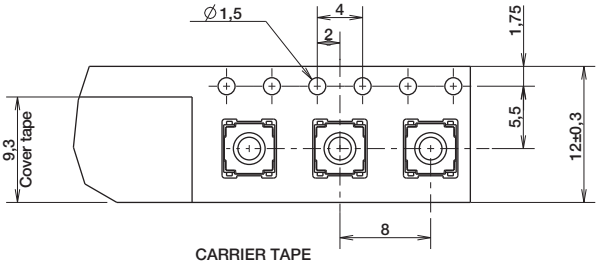

CARRIER TAPE

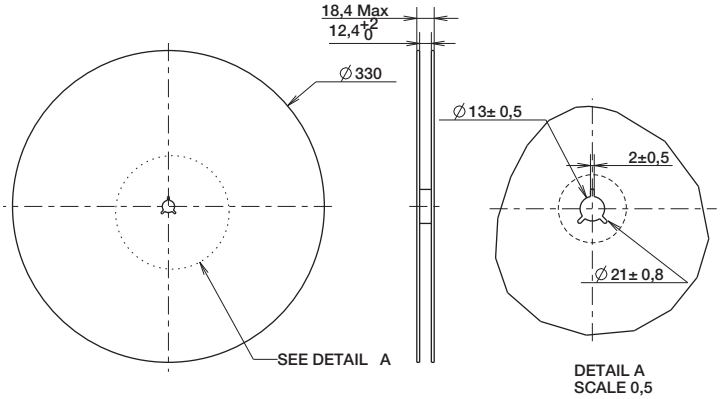

DETAIL A
SCALE 0,5

REEL

Dimensions are shown: mm
Specifications and dimensions subject to change

PTS 540 Series
Ultra Low Profile SMT Top Actuated

Features/Benefits

- ***3.7 x 3.7 mm footprint***
- ***0.35 mm thickness***
- ***High number of cycles***

Typical Applications

- ***MP3 accessories***
- ***Bluetooth headset***
- ***Remote controls***

Specifications

FUNCTION: momentary action
CONTACT ARRANGEMENT: 1 make contact = SPST N.O.
TERMINALS: J type for SMT
TRAVEL: 0.15 mm ± 0.1 mm

Mechanical

Part Number	Operating Force (gf)	Operating Life (operations)
PTS540 JM035 SMTR LFS	160 ± 50	500,000
PTS540 JK035 SMTR LFS	230 ± 50	300,000

Packaging

Switches in reels of 10,000 pieces.
Dimensions of reels according to EIA 481B
External diameter 330 mm

Electrical

MAXIMUM VOLTAGE:	12 VDC
MAXIMUM CURRENT DC:	50 mA
DIELECTRIC STRENGTH:	250 VA C (1mn)
CONTACT RESISTANCE:	≤ 100 mΩ
INSULATION RESISTANCE:	≥ 100 MΩ
BOUNCE TIME:	≤ 10 ms

Environmental

OPERATING TEMPERATURE: -30˚C to 85˚C

Process

SOLDERING: This component is suited to the following methods:
Infrared Reflow Soldering in accordance with IEC61760-1

NOTE: Specifications listed above are for switches with standard options.
For information on specific and custom switches, consult Customer Service Center.

How To Order

Our easy build-a-switch concept allows you to mix and match options to create the switch you need. To order, select desired option from each category and place it in the appropriate box.

For any part number different from those listed above, please consult your local representative.

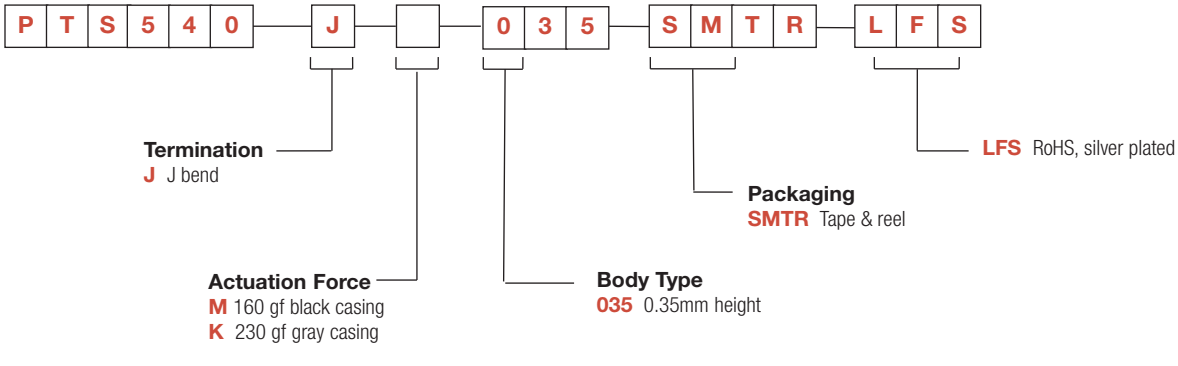

PTS 540 Series
Ultra Low Profile SMT Top Actuated

PTS 540

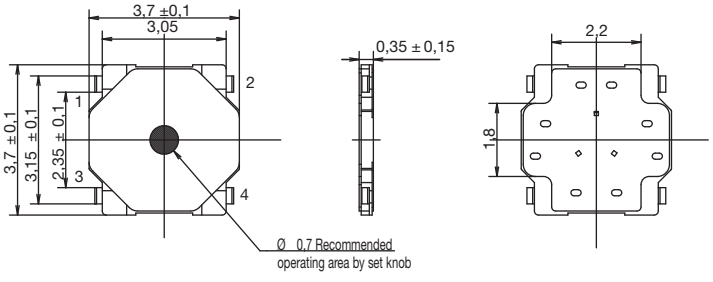

RECOMMENDED PCB

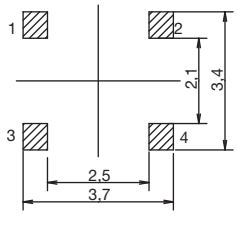

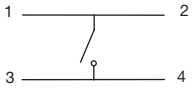

SCHEMATIC

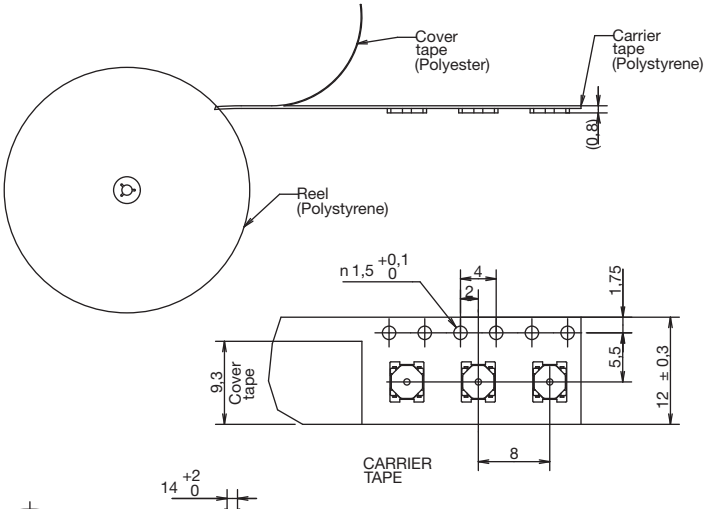

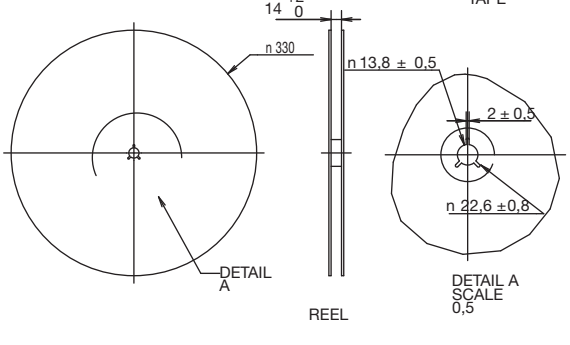

Dimensions are shown: mm
Specifications and dimensions subject to change

PTS 810 Series
Microminiature SMT Top Actuated

Features/Benefits

- ***4.2 x 3.2 mm footprint***
- ***2.5 mm thickness***
- ***High number of cycles***
- ***Color coded actuators***

Typical Applications

- ***Control panels***
- ***Nomad devices***
- ***Remote controls***
- ***Keyless entry system***

Specifications

FUNCTION: momentary action
CONTACT ARRANGEMENT: 1 make contact = SPST N.O.
TERMINALS: J type for SMT
TRAVEL: 160 & 260 gf: 0.15mm ± 0.1mm
400 & 600 gf: 0.20mm ± 0.1mm

	Operating Force (gf)	Operating Life (operations)
PTS810 SJM 250 SMTR LFS	160 ± 50	150,000
PTS810 SJK 250 SMTR LFS	260 ± 70	50,000
PTS810 SJG 250 SMTR LFS	400 ± 100	100,000
PTS810 SJS 250 SMTR LFS	600 ± 150	150,000

Packaging

Switches in reels of 2,900 pieces.
Dimensions of reels according to EIA 481B
External diameter 330 mm

Electrical

MAXIMUM VOLTAGE: 16 VDC
MAXIMUM CURRENT DC: 50 mA
DIELECTRIC STRENGTH: 250 VA C (1mn)
CONTACT RESISTANCE: ≤ 500 mΩ
INSULATION RESISTANCE: ≥ 100 MΩ
BOUNCE TIME: ≤ 10 ms

Environmental

OPERATING TEMPERATURE: -40˚C to 85˚C

Process

SOLDERING: This component is suited to the following methods:
Infrared Reflow Soldering in accordance with IEC61760-1

NOTE: Specifications listed above are for switches with standard options.
For information on specific and custom switches, consult Customer Service Center.

How To Order

Our easy build-a-switch concept allows you to mix and match options to create the switch you need. To order, select desired option from each category and place it in the appropriate box.

For any part number different from those listed above, please consult your local representative.

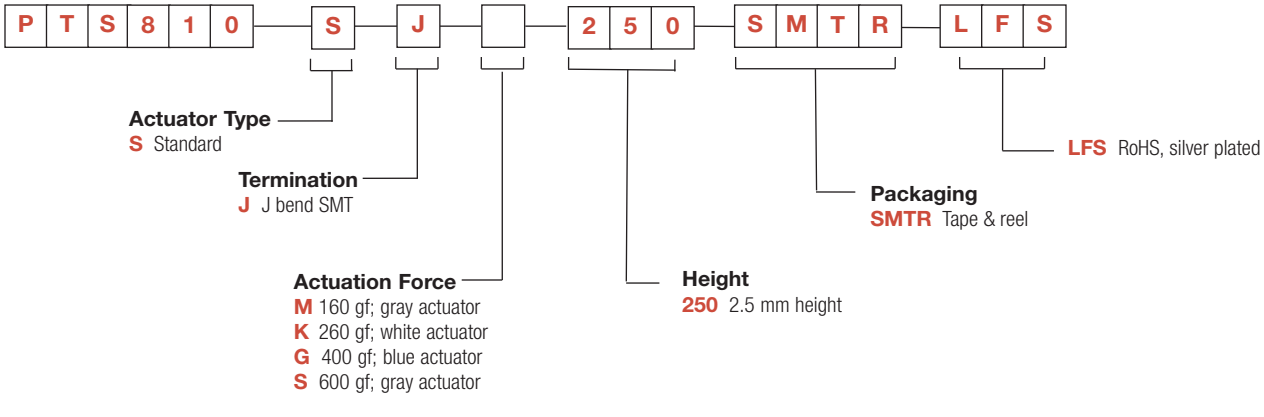

PTS 810 Series
Microminiature SMT Top Actuated

PTS810

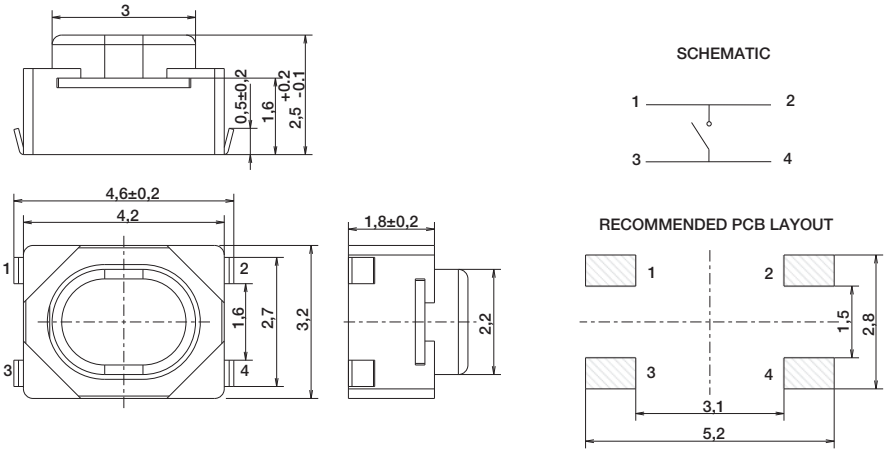

TAPE & REEL

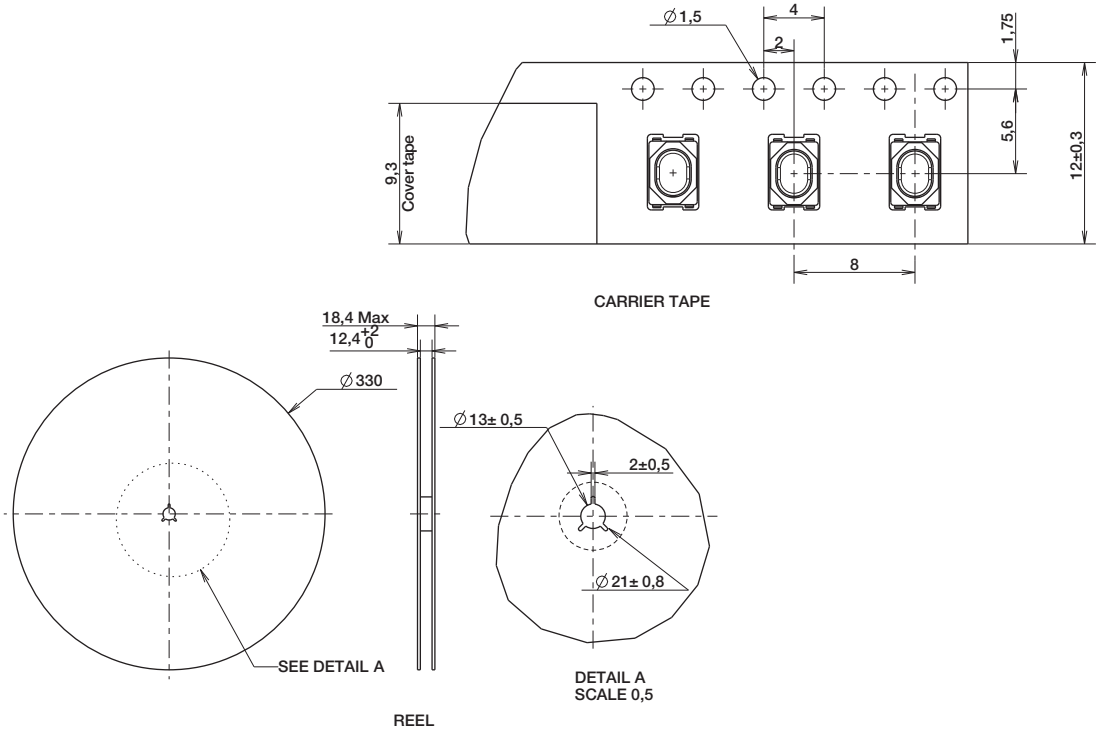

PTS 820 Series
Microminiature SMT Top Actuated

Features/Benefits

- ***3.9 x 2.9 mm footprint***
- ***Three different heights***
- ***High number of cycles***
- ***Reduced footprint***

Typical Applications

- ***Control panels***
- ***Nomad devices***
- ***Remote controls***
- ***Keyless entry system***

Specifications

FUNCTION: momentary action
CONTACT ARRANGEMENT: 1 make contact = SPST N.O.
TERMINALS: J type for SMT
TRAVEL: 0.2mm + 0.1mm / -0.05 mm

	Operating Force (gf)	Life Cycles	Height mm	Pegs
PTS820 J25M SMTR LFS	160 ± 50	200,000	2.5	No
PTS820 J25K SMTR LFS	250 ± 50	100,000	2.5	No
PTS820 J25MP SMTR LFS	160 ± 50	200,000	2.5	Yes
PTS820 J25KP SMTR LFS	250 ± 50	100,000	2.5	Yes
PTS820 J20M SMTR LFS	160 ± 50	200,000	2.0	No
PTS820 J20K SMTR LFS	250 ± 50	100,000	2.0	No
PTS820 J20MP SMTR LFS	160 ± 50	200,000	2.0	Yes
PTS820 J20KP SMTR LFS	250 ± 50	100,000	2.0	Yes
PTS820 J15M SMTR LFS	160 ± 50	200,000	1.5	No
PTS820 J15K SMTR LFS	250 ± 50	100,000	1.5	No
PTS820 J15MP SMTR LFS	160 ± 50	200,000	1.5	Yes
PTS820 J15KP SMTR LFS	250 ± 50	100,000	1.5	Yes

Packaging

Switches in reels of 2,500 pieces for 1.5 and 2.0 mm height
Switches in reels of 2,300 pieces for 2.5 mm height
Dimensions of reels according to EIA 481B
External diameter 330 mm

Electrical

MAXIMUM VOLTAGE:	12 VDC
MAXIMUM CURRENT DC:	50 mA
DIELECTRIC STRENGTH:	100 VA C (1mn)
CONTACT RESISTANCE:	≤ 100 mΩ
INSULATION RESISTANCE:	≥ 100 MΩ
BOUNCE TIME:	≤ 10 ms

Environmental

OPERATING TEMPERATURE: -40˚C to 85˚C

Process

SOLDERING: This component is suited to the following methods:
Infrared Reflow Soldering in accordance with IEC61760-1

NOTE: Specifications listed above are for switches with standard options.
For information on specific and custom switches, consult Customer Service Center.

How To Order

Our easy build-a-switch concept allows you to mix and match options to create the switch you need. To order, select desired option from each category and place it in the appropriate box.

For any part number different from those listed above, please consult your local representative.

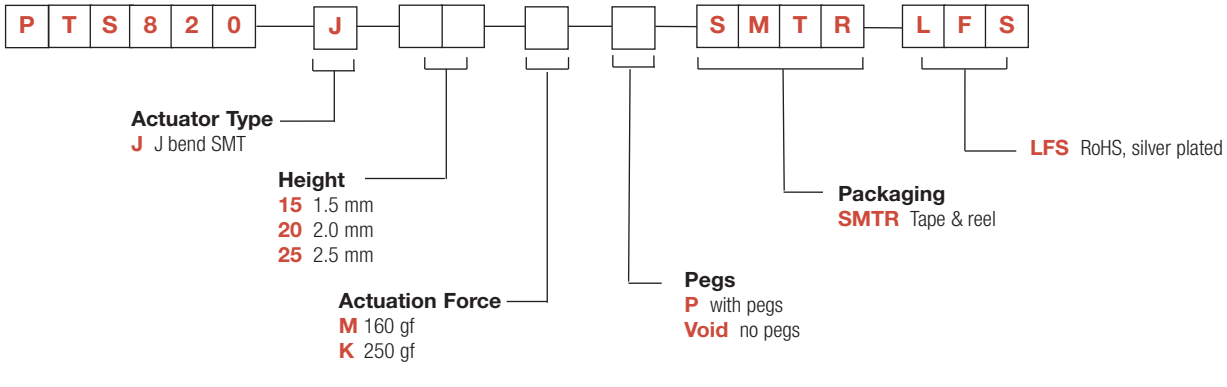

PTS 820 Series
Microminiature SMT Top Actuated

2.5 & 2.0 mm height (H) - version shown here with pegs

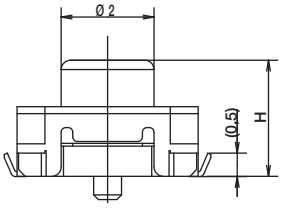

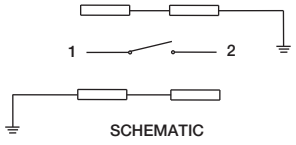

SCHEMATIC

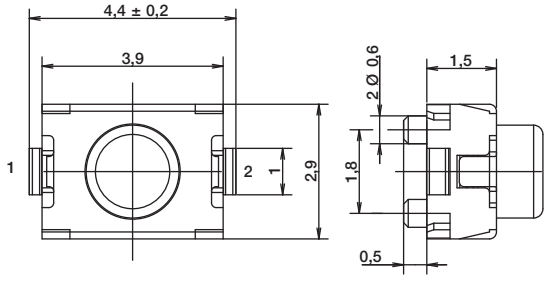

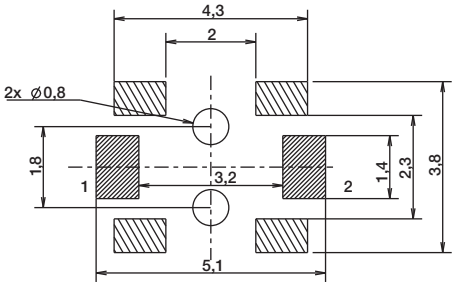

RECOMMENDED PCB LAYOUT

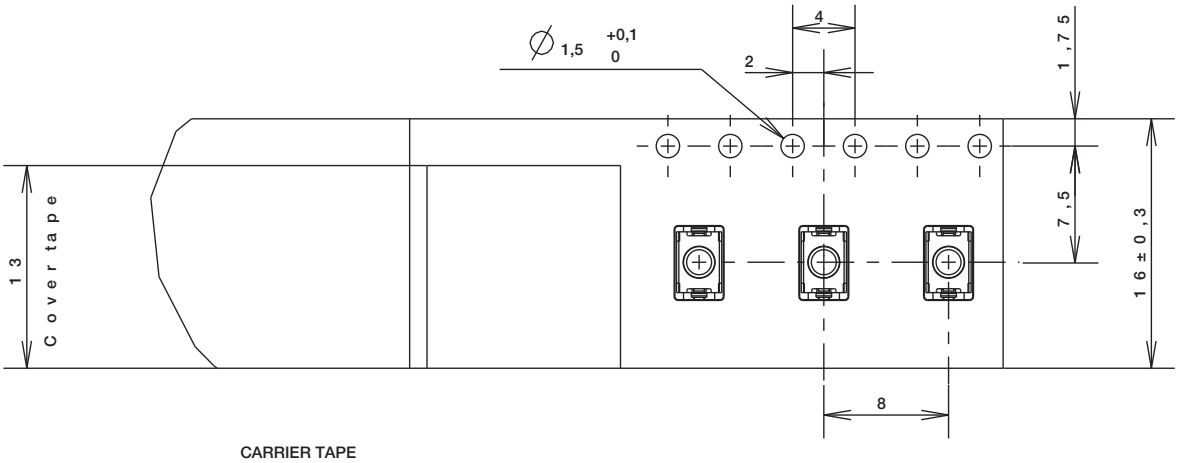

CARRIER TAPE

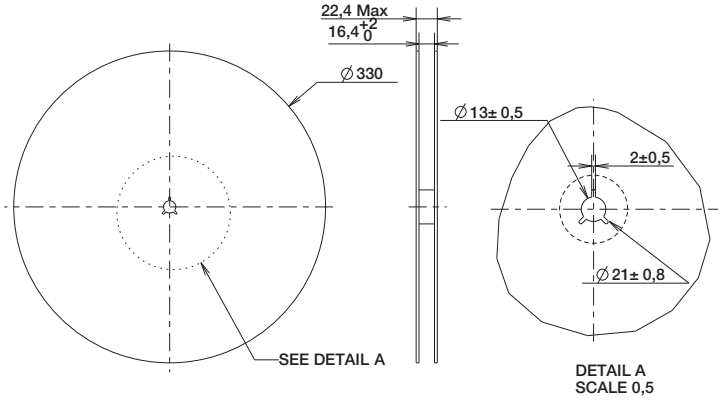

DETAIL A
SCALE 0,5

REEL

1.5 mm height (H) - version shown here with pegs

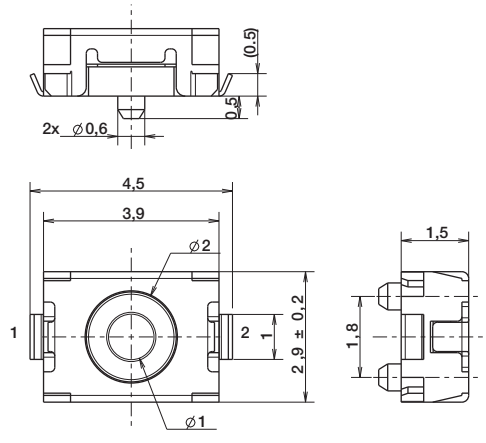

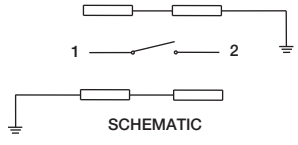

SCHEMATIC

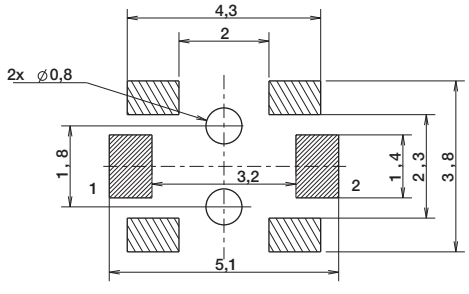

RECOMMENDED PCB LAYOUT

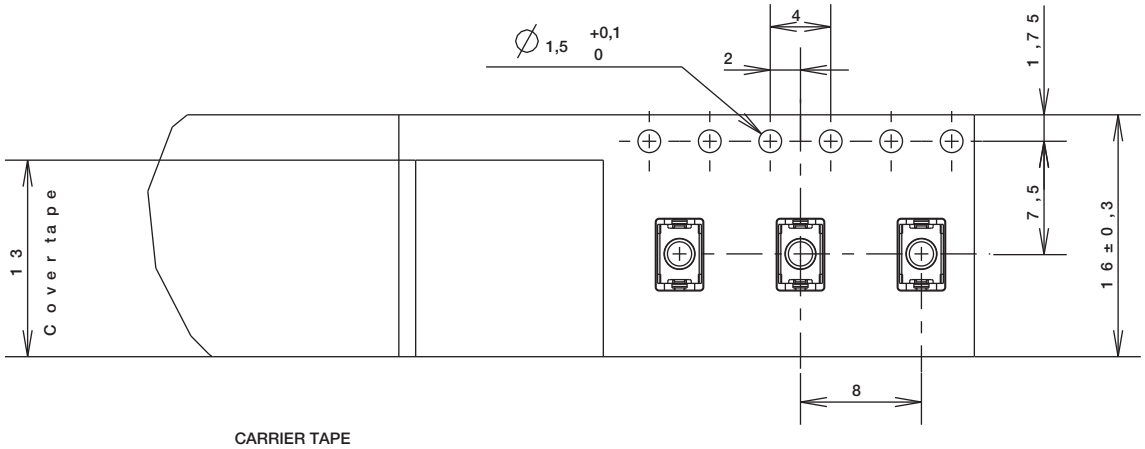

CARRIER TAPE

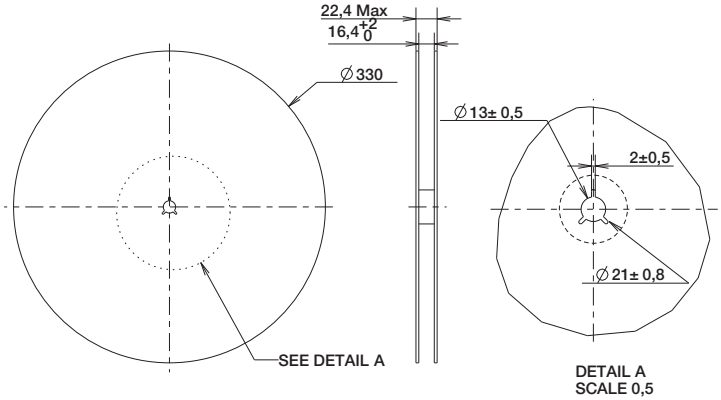

DETAIL A
SCALE 0,5

REEL

PTS 830 Series
Microminiature SMT Top Actuated

Features/Benefits

- ***3.5 x 2.6 mm footprint***
- ***High number of cycles***
- ***Optional ground pin***

Typical Applications

- ***Wearable electronics***
- ***Nomad devices***
- ***Remote controls***
- ***Keyless entry system***

Specifications

FUNCTION: momentary action
CONTACT ARRANGEMENT: 1 make contact = SPST N.O.
TERMINALS: G type for SMT
TRAVEL: 0.15 mm + 0.1 mm

	Operating Force (gf)	Life Cycles	Ground Pin
PTS830 GM140 SMTR LFS	160 ± 50	500,000	No
PTS830 GG140 SMTR LFS	450 ± 80	200,000	No
PTS830 GM140G SMTR LFS	160 ± 50	500,000	Yes
PTS830 GG140G SMTR LFS	450 ± 80	200,000	Yes

Packaging

Switches in reels of 9,500 pieces
Dimensions of reels according to EIA 481B
External diameter 330 mm

Electrical

MAXIMUM VOLTAGE:	12 VDC
MAXIMUM CURRENT DC:	50 mA
DIELECTRIC STRENGTH:	100 VA C (1mn)
CONTACT RESISTANCE:	≤ 100 mΩ
INSULATION RESISTANCE:	≥ 100 MΩ
BOUNCE TIME:	≤ 10 ms

Environmental

OPERATING TEMPERATURE: -40˚C to 85˚C

Process

SOLDERING: This component is suited to the following methods:
Infrared Reflow Soldering in accordance with IEC61760-1

NOTE: Specifications listed above are for switches with standard options.
For information on specific and custom switches, consult Customer Service Center.

How To Order

Our easy build-a-switch concept allows you to mix and match options to create the switch you need. To order, select desired option from each category and place it in the appropriate box.

For any part number different from those listed above, please consult your local representative.

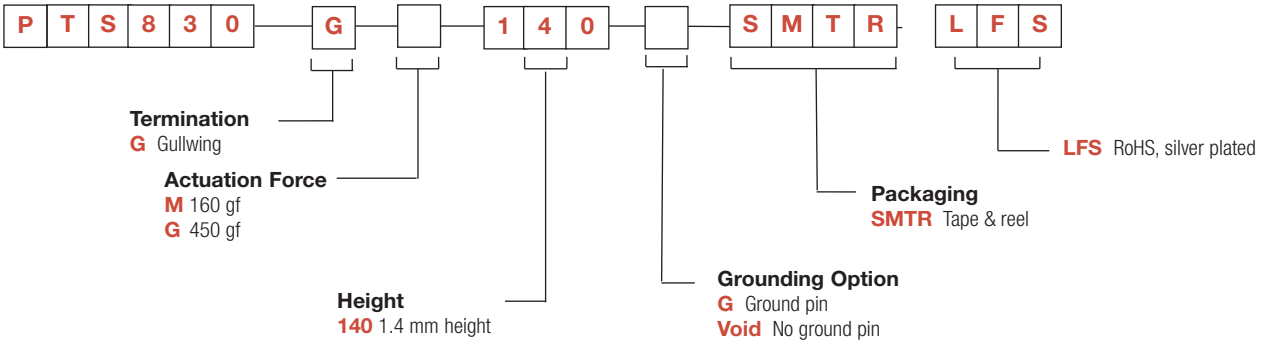

PTS830 GX 140 SMTR LFS

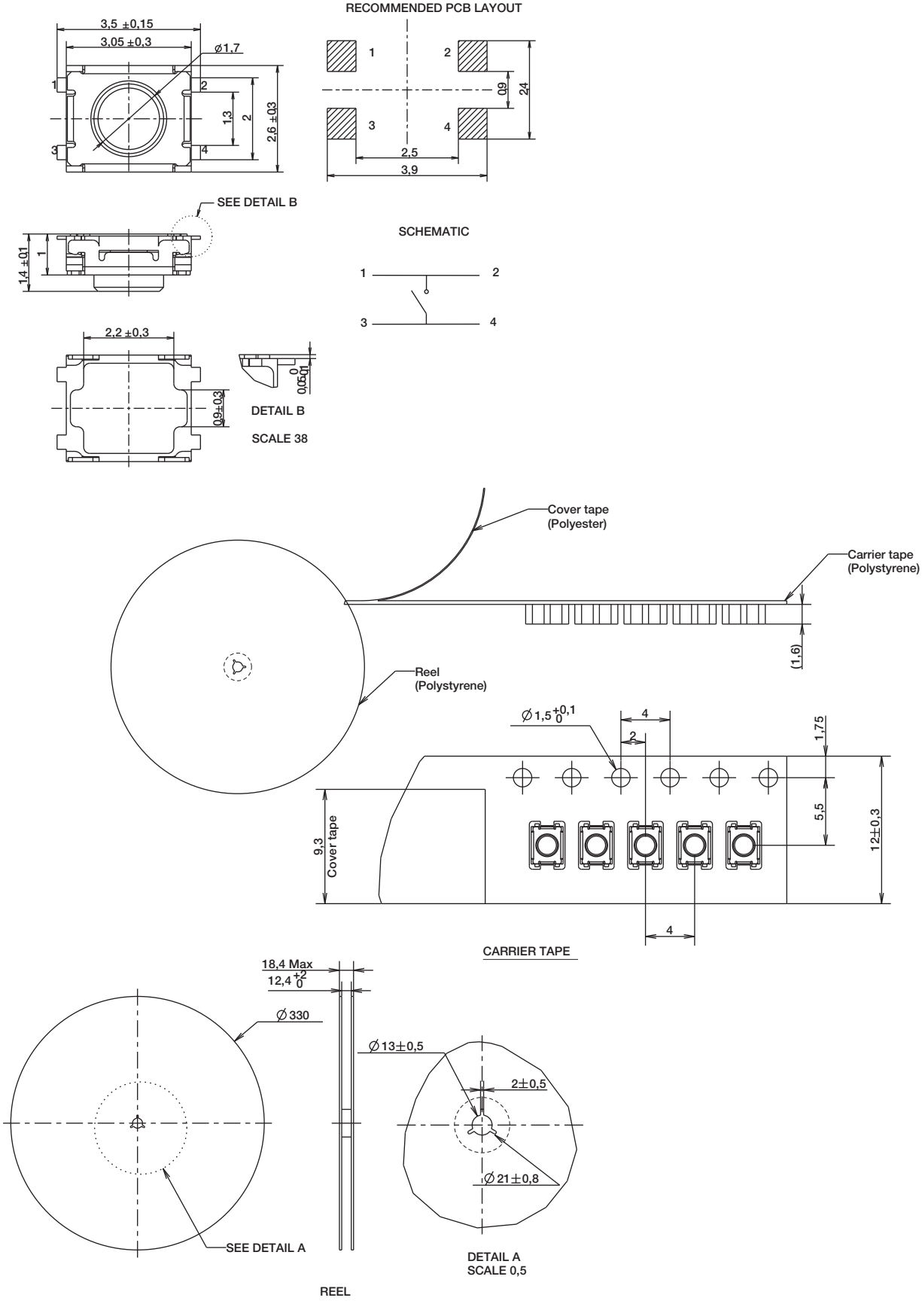

PTS 830 Series
Microminiature SMT Top Actuated

PTS830 GX 140 G SMTR LFS

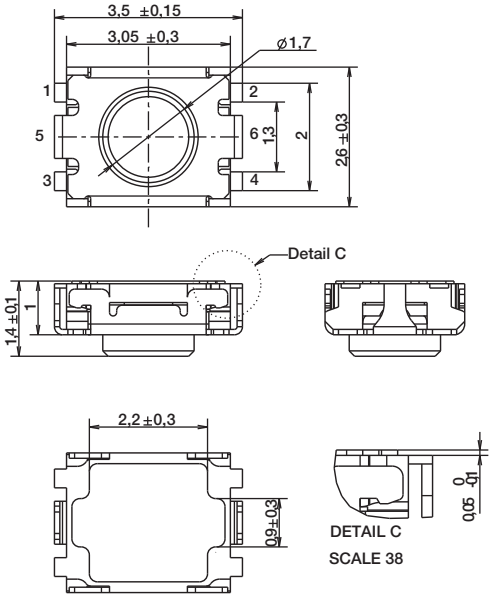

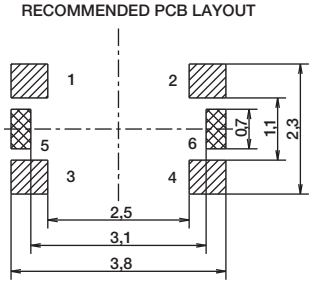

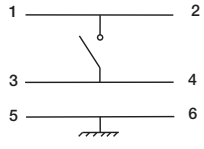

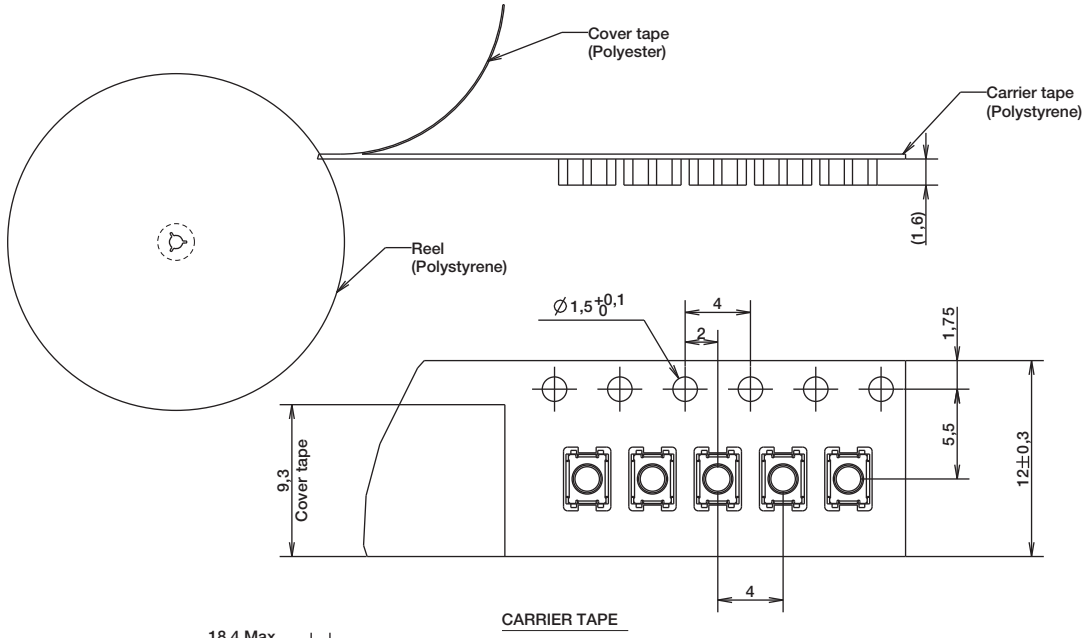

CARRIER TAPE

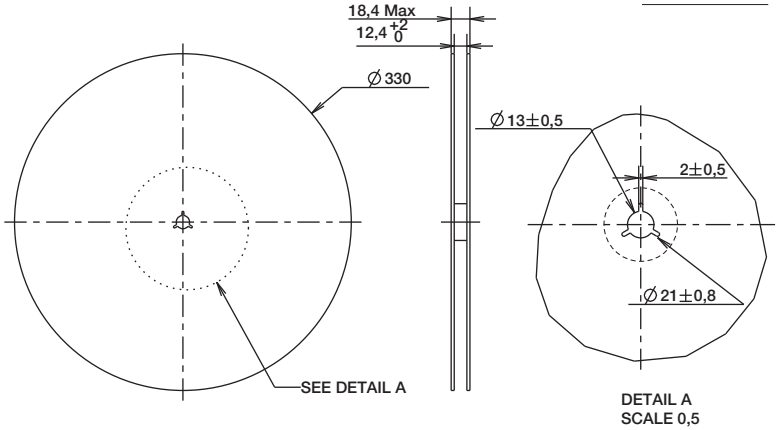

DETAIL A
SCALE 0,5

REEL

Dimensions are shown: mm
Specifications and dimensions subject to change

PTS 840 Series
Microminiature SMT Side Actuated

Features/Benefits

- *3.5 x 3.55 mm footprint*
- *Front PIP leads option for strong shear resistance*
- *ESD pin option*
- *Reduced footprint*

Typical Applications

- *Nomad devices*
- *Remote controls*
- *Personal health diagnostics*
- *Consumer electronics*

Specifications

FUNCTION: momentary action
CONTACT ARRANGEMENT: 1 make contact = SPST N.O.
TERMINALS: G and front PIP types for SMT
TRAVEL: 0.2mm + 0.2mm / -0.1 mm
LIFE: 100,000 cycles

Type	Operating Force (gf)	SMT Leads	Pegs
Without ground pin			
PTS840 GM SMTR LFS	160 -40/+70	G leads	No
PTS840 GK SMTR LFS	220 -70/+80	G leads	No
PTS840 PM SMTR LFS	160 -40/+70	P leads	No
PTS840 PK SMTR LFS	220 -70/+80	P leads	No
PTS840 GMP SMTR LFS	160 -40/+70	G leads	Yes
PTS840 GKP SMTR LFS	220 -70/+80	G leads	Yes
With ground pin			
PTS840 ESDGM SMTR LFS	160 -40/+70	G leads	No
PTS840 ESDGK SMTR LFS	220 -70/+80	G leads	No
PTS840 ESDPM SMTR LFS	160 -40/+70	P leads	No
PTS840 ESDPK SMTR LFS	220 -70/+80	P leads	No
PTS840 ESDGMP SMTR LFS	160 -40/+70	G leads	Yes
PTS840 ESDGKP SMTR LFS	220 -70/+80	G leads	Yes

Electrical

MAXIMUM VOLTAGE:	12 VDC
MAXIMUM CURRENT DC:	50 mA
DIELECTRIC STRENGTH:	250 VA C (1mn)
CONTACT RESISTANCE:	≤ 500 mΩ
INSULATION RESISTANCE:	≥ 100 MΩ
BOUNCE TIME:	≤ 10 ms

Environmental

OPERATING TEMPERATURE: -40˚C to 85˚C

Process

SOLDERING: This component is suited to the following methods:
Infrared Reflow Soldering in accordance with IEC61760-1

Packaging

In reels of 3,500 pieces
Dimensions of reels according to EIA 481B
External diameter 330 mm

NOTE: Specifications listed above are for switches with standard options.
For information on specific and custom switches, consult Customer Service Center.

How To Order

Our easy build-a-switch concept allows you to mix and match options to create the switch you need. To order, select desired option from each category and place it in the appropriate box.

For any part number different from those listed above, please consult your local representative.

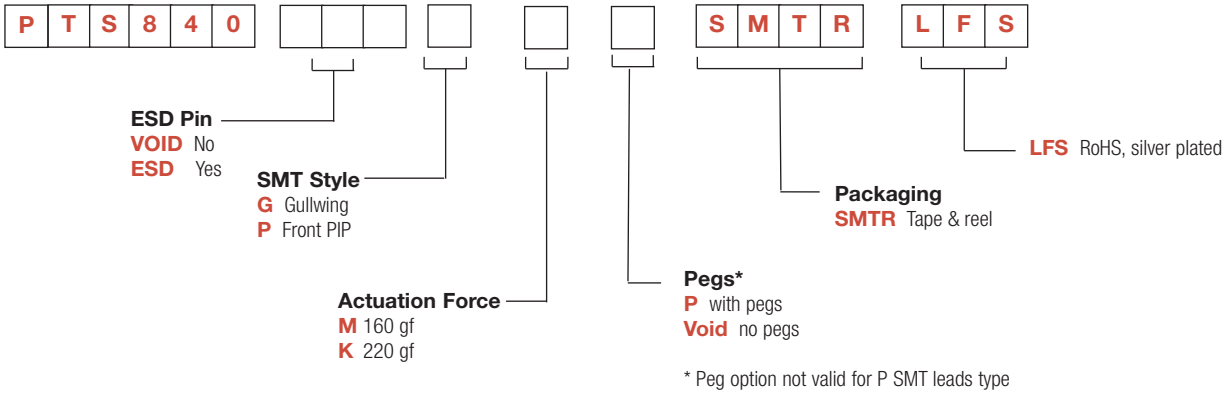

Design Recommendations

- "P" leads are recommended for applications where shear resistance is of importance
- When a precise alignment between application button and the switch is requested, version with pegs are the right choice to limit the possible floating of the switch during solderability.

Dimensions are shown: mm
Specifications and dimensions subject to change

Standard G SMT Leads with ESD and Peg options

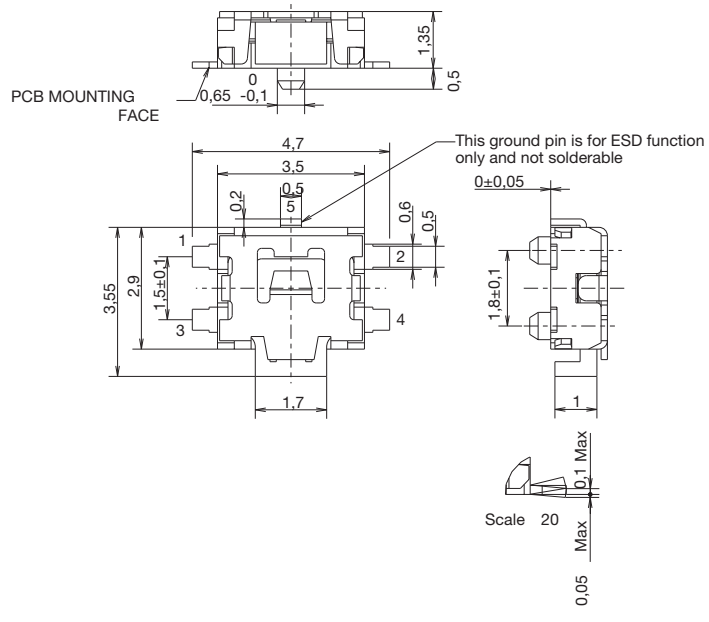

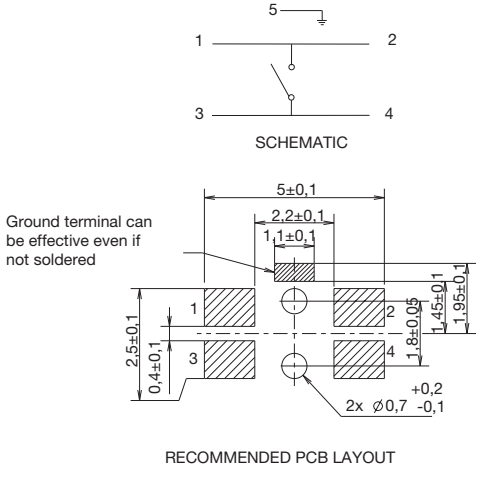

P SMT Leads with ESD option

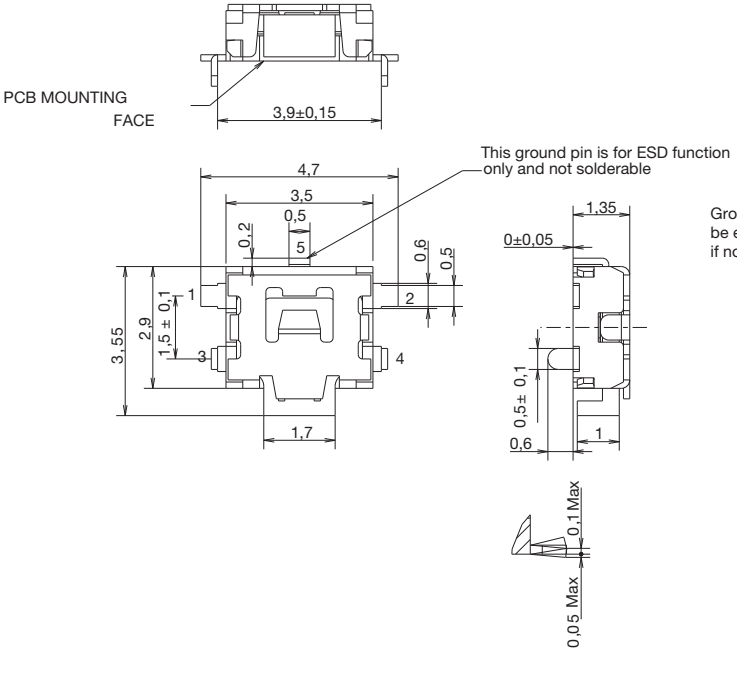

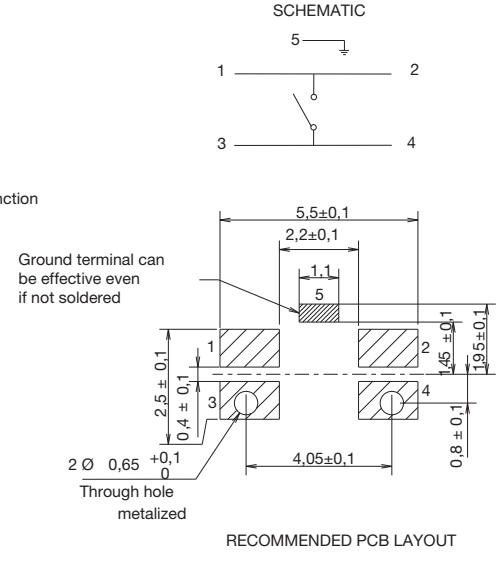

PTS 840 Series
Microminiature SMT Side Actuated

TAPE & REEL

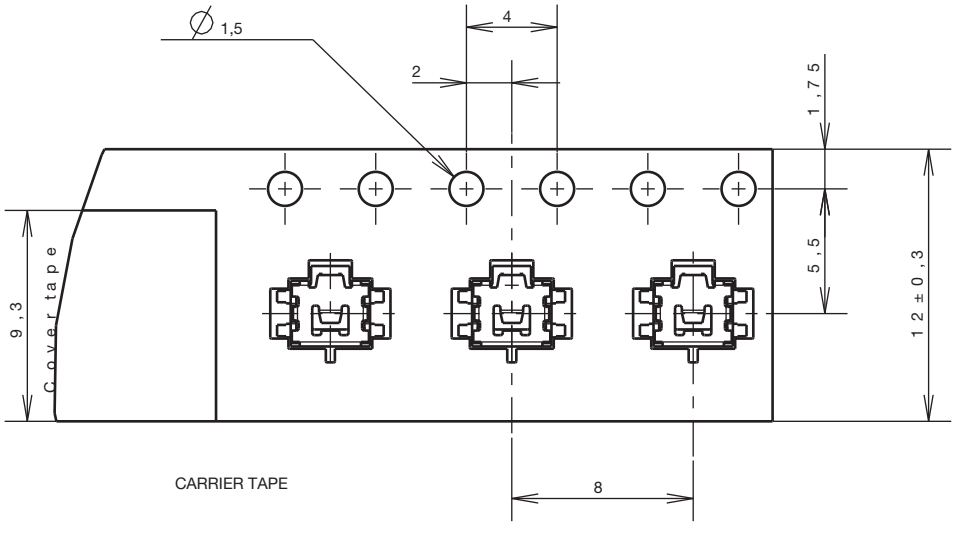

CARRIER TAPE

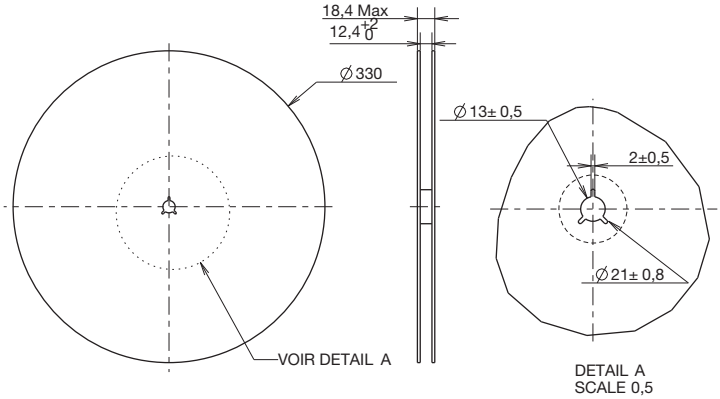

DETAIL A
SCALE 0,5

REEL

KSR Series
Subminiature Tact Switch for SMT

Features/Benefits

- ***4 actuation forces***
- ***G terminations***
- ***N.O. and N.C.***
- ***Detect type available***
- ***Rubber actuator***
- ***IP50 sealed***
- ***RoHS compliant and compatible***

Typical Applications

- ***Automotive***
- ***Medical equipment***
- ***Industrial electronics***
- ***Smart meters***

Specification

FUNCTION: momentary action
CONTACT ARRANGEMENT: Normally Open
TERMINALS: Gullwing type for SMT

Mechanical

Type	Operating force Newtons (grams)	Operating life (operations)	Travel (mm)
KSR211G LFS / KSR213G LFG	1,5 < 1,85 (185) < 2,2	100,000	0,25 ± 0,15
KSR221G LFS / KSR223G LFG	1,9 < 2,25 (225) < 2,6	100,000	0,3 ± 0,15
KSR231G LFS /KSR233G LFG	2,25 < 3,00 (300)< 3,75	100,000	0,35 ± 0,15
KSR251G LFS / KSR253G LFG	3,4 < 4,50 (450) < 5,6	100,000	0,5 ± 0,15
KSR221G NC LFS	1,5 < 2,25 (225) < 3	30,000	0,3 ± 0,15
KSR223G NC LFG	1,5 < 2 (200) < 2,5	30,000	0,3 ± 0,15

Overload: 20 Newtons
Detect switch versions are available. Please see Detect chapter KSR2D/M series.

Packaging

Switches are delivered on continuous tape, in reels of 2,500 pieces.

Electrical

	Silver	Gold
MAXIMUM POWER:	1 VA	0.2 VA
MAXIMUM VOLTAGE:	32 VDC	32 VDC
MINIMUM VOLTAGE:	20 mV	20 mV
MAXIMUM CURRENT DC:	50 mA	10 mA
MINIMUM CURRENT DC:	1 mA	1 mA

CONTACT RESISTANCE: ≤ 100 mΩ
INSULATION RESISTANCE: (100 V): 1G Ω (between terminals)
BOUNCE TIME: 1 ms max.

Environmental

	Silver	Gold
OPERATING TEMPERATURE:	-40˚C to 85˚C	-40˚C to 125˚C
STORAGE TEMPERATURE:	-55˚C to 85˚C	-55˚C to 125˚C

Process

SOLDERING: Compatible with lead free reflow soldering process.

NOTE: Specifications listed above are for switches with standard options.
For information on specific and custom switches, consult Customer Service Center.

How To Order

Our easy build-a-switch concept allows you to mix and match options to create the switch you need. To order, select desired option from each category and place it in the appropriate box.

However, please note that all the combinations of these options are not feasible.
For any part number different from those listed above, please consult your local representative.

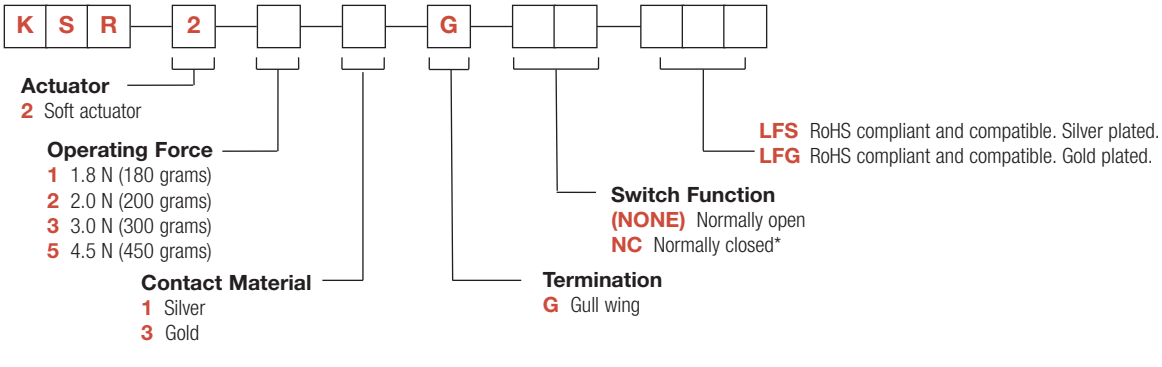

*Available on KSR223G only.

Dimensions are shown: mm
Specifications and dimensions subject to change

KSR

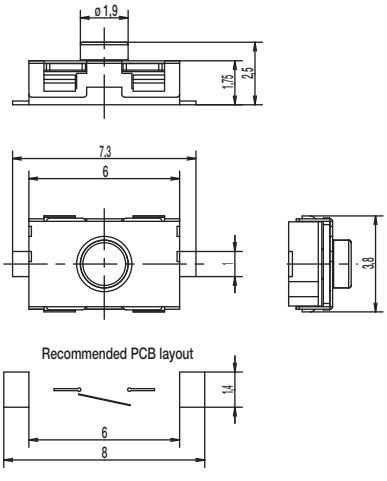

TAPE & REEL

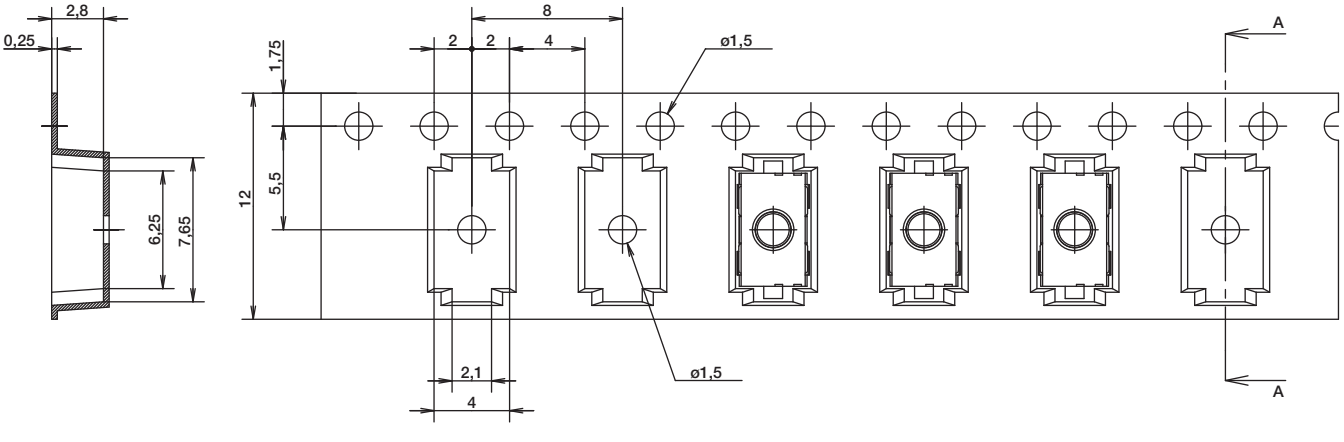

DIRECTION OF FEED

First Angle Projection

Dimensions are shown: mm
Specifications and dimensions subject to change

KSR Long Life-200,000 cycles-Gold and Silver Series Subminiature Tact Switch for SMT

Features/Benefits

- ***4 actuation forces***
- ***G terminations***
- ***N.O.***
- ***Detect type available***
- ***Rubber actuator***
- ***IP50 sealed***
- ***RoHS compliant and compatible***

Typical Applications

- ***Automotive***
- ***Medical equipment***
- ***Industrial electronics***

Specification

FUNCTION: momentary action
CONTACT ARRANGEMENT: Normally Open
TERMINALS: Gullwing type for SMT

Mechanical

Type	Operating force(Fa) Newtons (grams)	Operating life (operations)	Travel (mm)
Silver versions			
KSR212G LFS	1,5 < 1,85 (185) < 2,2	200,000	0,25 ± 0,15
KSR222G LFS	1,9 < 2,25 (225) < 2,6	200,000	0,3 ± 0,15
KSR232G LFS	2,25 < 3,00 (300)< 3,75	200,000	0,35 ± 0,15
KSR252G LFS	3,4 < 4,50 (450) < 5,6	200,000	0,5 ± 0,15
Gold versions			
KSR214G LFS	1,5 < 1,85 (185) < 2,2	200,000	0,25 ± 0,15
KSR224G LFS	1,9 < 2,25 (225) < 2,6	200,000	0,3 ± 0,15
KSR234G LFS	2,25 < 3,00 (300)< 3,75	200,000	0,35 ± 0,15
KSR254G LFS	3,4 < 4,50 (450) < 5,6	200,000	0,5 ± 0,15

OVERLOAD: 20 Newtons

Packaging

Switches are delivered on continuous tape, in reels of 2,500 pieces.

Electrical

	Silver	Gold
MAXIMUM POWER:	1 VA	0.2 VA
MAXIMUM VOLTAGE:	32 V dc	32 V dc
MINIMUM VOLTAGE:	20 m Vdc	20 m Vdc
MAXIMUM CURRENT DC:	50 mA	10 mA
MINIMUM CURRENT DC:	1 mA	1 mA

CONTACT RESISTANCE: ≤ 100 m Ω
INSULATION RESISTANCE (100 V): 1 G Ω (between terminals)
BOUNCE TIME: 1 ms max

Environmental

	Silver	Gold
OPERATING TEMPERATURE:	-40˚C to 85˚C	-40˚C to 125˚C
STORAGE TEMPERATURE:	-55˚C to 85˚C	-55˚C to 125˚C

Process

SOLDERING: Compatible with lead free reflow soldering process.

NOTE: Specifications listed above are for switches with standard options.
For information on specific and custom switches, consult Customer Service Center.

How To Order

Our easy build-a-switch concept allows you to mix and match options to create the switch you need. To order, select desired option from each category and place it in the appropriate box.

However, please note that all the combinations of these options are not feasible.
For any part number different from those listed above, please consult your local representative.

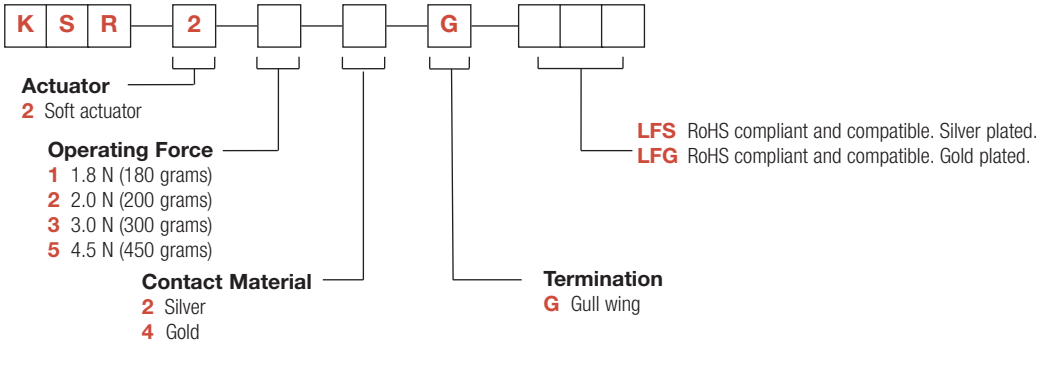

Dimensions are shown: mm
Specifications and dimensions subject to change

KSR Long Life-200,000 cycles-Gold and Silver Series Subminiature Tact Switch for SMT

KSR

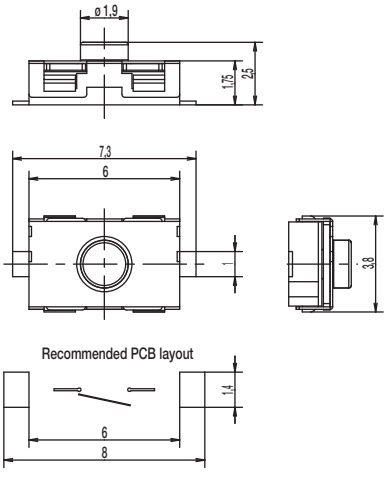

TAPE & REEL

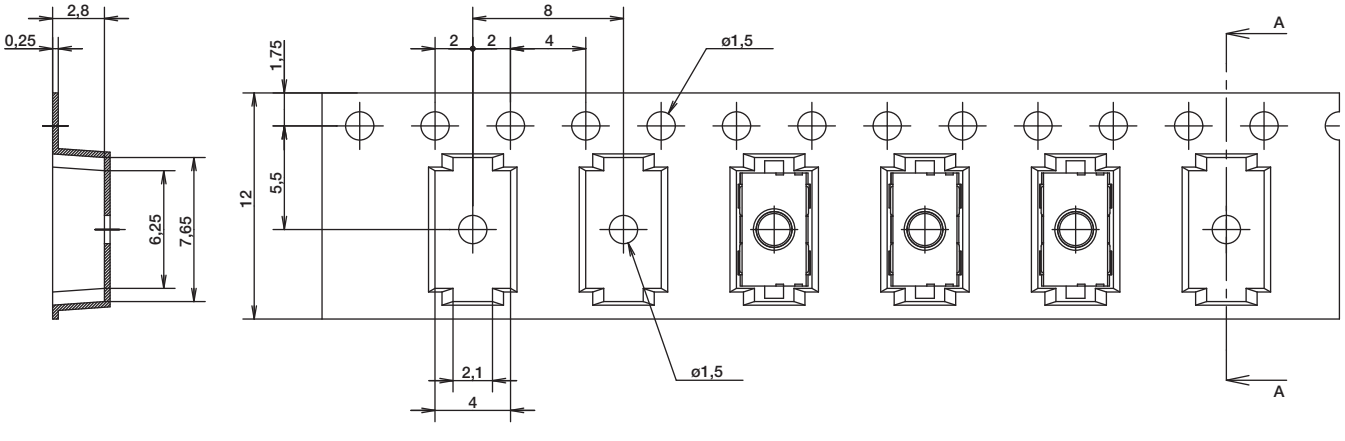

DIRECTION OF FEED

First Angle Projection

Dimensions are shown: mm
Specifications and dimensions subject to change

Features/Benefits

- *Low profile of 1.7 mm*
- *Excellent tactile feel*
- *High shear force*
- *Range of actuation forces*
- *Large flat top*
- *RoHS compliant and compatible*

Typical Applications

- *Cellular phone*
- *Industrial electronics*
- *Health diagnostic electronics*

Specification

FUNCTION: momentary action
CONTACT ARRANGEMENT: N.O.
TERMINALS: Gullwing
IP40 sealed

Mechanical

OVERLOAD: 20N
TACTILE FEELING: 2 and 4N: 25% min.
2.5N: 30% min.

Type	Operating force Newtons (grams)	Operating life (operations)	Travel (mm)
KSS221G	2.0 (200) ± 0.5	100,000	0,3 ± 0,15
KSS231G	2.5 (250) ± 0.5	100,000	0,3 ± 0,10
KSS241G	4.0 (400) ± 1.0	100,000	0,3 ± 0,15

NOTE: Specifications listed above are for switches with standard options.
For information on specific and custom switches, consult Customer Service Center.

Electrical

	Silver	Gold
MAXIMUM POWER:	1 VA	0.2 VA
MAXIMUM VOLTAGE:	32 VDC	32 VDC
MAXIMUM CURRENT:	50 mA	10 mA
MINIMUM CURRENT:	1 mA	1 mA

DIELECTRIC STRENGTH: ≥ 250 VDC
CONTACT RESISTANCE: < 100 mΩ
INSULATION RESISTANCE (100 VDC): ≥ 10^9 Ω
BOUNCE TIME: < 3 ms

Environmental

	Silver	Gold
OPERATING TEMPERATURE:	-40°C to 85°C	-40°C to 125°C
STORAGE TEMPERATURE:	-55°C to 85°C	-55°C to 125°C

Process

Infared reflow soldering in accordance with IEC 61760-1

Packaging

Tape and reels in reels of 3,000 pieces.
External diameter 330mm ± 2mm.

How To Order

Our easy build-a-switch concept allows you to mix and match options to create the switch you need. To order, select desired option from each category and place it in the appropriate box.

However, please note that all the combinations of these options are not feasible.
For any part number different from those listed above, please consult your local representative.

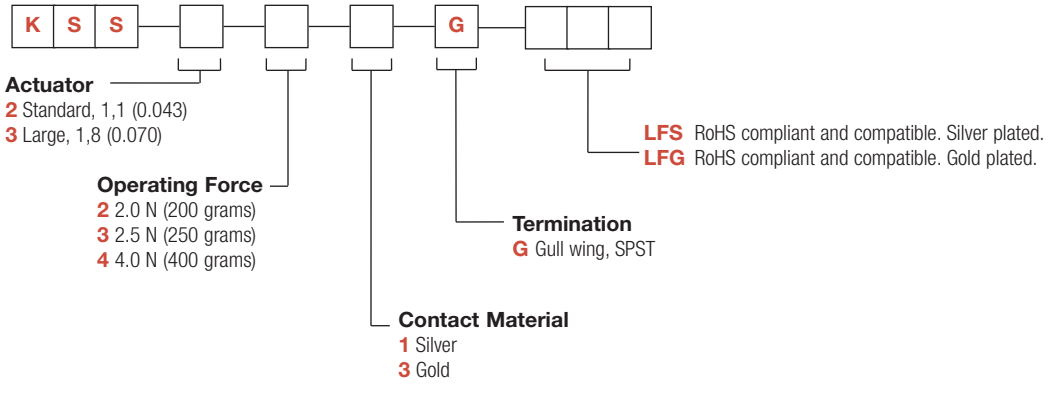

KSS Series
Subminiature SMT Side Actuated

KSS

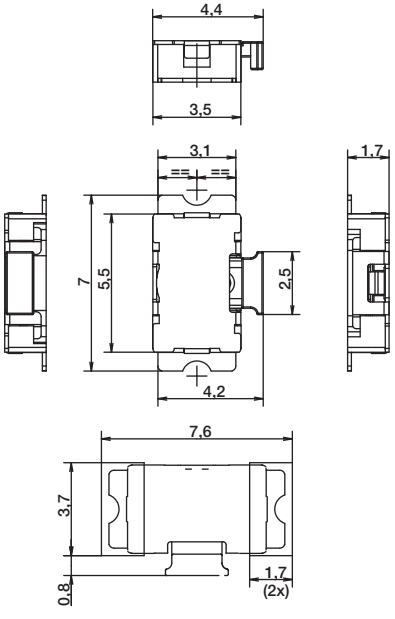

ACTUATOR

2 STANDARD, 1,1 (0.043)

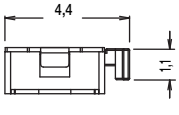

3 LARGE, 1,8 (0.070)

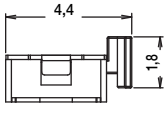

TAPE & REEL

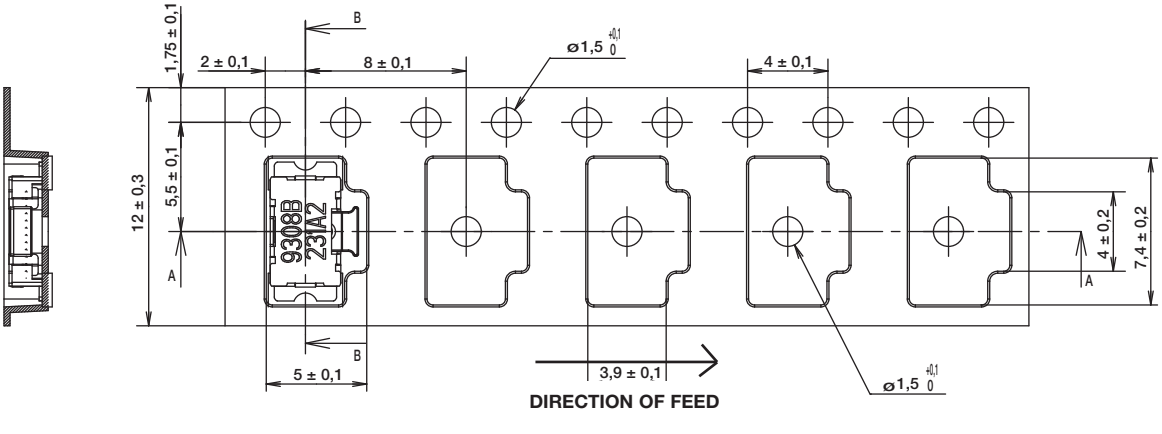

First Angle Projection

Dimensions are shown: mm
Specifications and dimensions subject to change

KSC Series
Sealed Tact Switch for SMT

Features/Benefits

- ***Positive tactile feeling***
- ***J or G terminations***
- ***Various heights***
- ***IP67***

Typical Applications

- ***Automotive***
- ***Cellular phones***
- ***Industrial electronics***
- ***Network infrastructure and IT***
- ***Elevator***

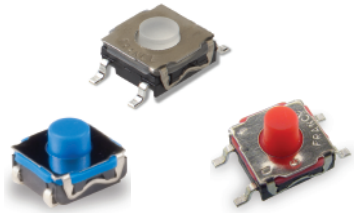

Specification

FUNCTION: Momentary action
CONTACT ARRANGEMENT: 1 make contact = SPST, N.O.
TERMINALS: J bend & Gullwing type for SMT
SEALING: IP67 except KSC5 (IP50)

Liability Limitation

This datasheet does not provide enough information for applications that require a certain level of quality or safety such as automotive, medical systems, or safety equipement. Please contact customer service for the contractual specification package.

Environmental

	Silver	Gold
OPERATING TEMPERATURE:	-40˚C to 85˚C	-40˚C to 125˚C
STORAGE TEMPERATURE:	-55˚C to 85˚C	-55˚C to 125˚C

Process

SOLDERING: Depending on the application, this component is suited to the following methods:
– Terminals being silver or gold plated over a nickel barrier, the use of slightly activated flux is suitable.
– Soldering on double wave machine for vertical versions: soldering time ≤ 5 sec.
– Cleaning according to typical washing processes.
– Infrared Reflow Soldering in accordance with IEC 61760-1.

Electrical

	Silver	Gold
MAXIMUM POWER:	1 VA	0.2 VA
MAXIMUM VOLTAGE:	32 VDC	32 VDC
MINIMUM VOLTAGE:	20 mV	20 mV
MAXIMUM CURRENT:	50 mA	10 mA
MINIMUM CURRENT:	1 mA*	0.1 mA

DIELECTRIC STRENGTH (50 Hz, 1 min.): ≥ 250 Vrms
CONTACT RESISTANCE: ≤ 100mΩ
INSULATION RESISTANCE (100 V): ≥ 10M Ω
BOUNCE TIME: ≤ 1 ms
* Ultra low current with 10 µA - 1 VDC version are available upon request for KSC2 and KSC4

Packaging

Tape and Reel (see series for quantity information)

NOTE: Specifications listed above are for switches with standard options.

KSC Product Range

KSC1	KSC2	KSC3	KSC4	KSC5	KSC6	KSC7	KSC8	KSC9	KSC10
Without actuator	Soft actuator	Hard actuator	Soft actuator	Hard actuator	Hard actuator	Soft actuator	Hard actuator	Hard actuator	Soft actuator
H = 2.5 mm	H = 3.5 mm	H = 3.5 mm	H = 5.2 mm	H = 5.6 mm	H = 7.7 mm	H = 4.3 mm	H = 4.9 mm	H = 7.7 mm compatible with button	H = 4.9 mm
IP67	IP67	IP67	IP67	IP50	IP67	IP67	IP67	IP67	IP67

Note: KSC Series is subject to variants. Please contact customer service for other options.

KSC Series
Sealed Tact Switch for SMT

J J BEND

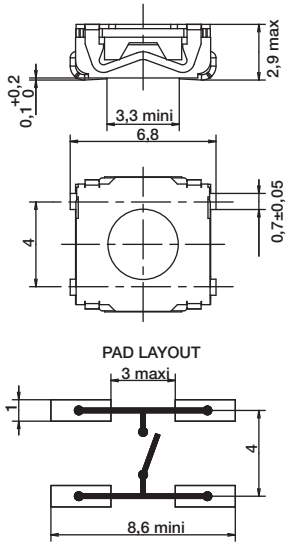

G GULLWING

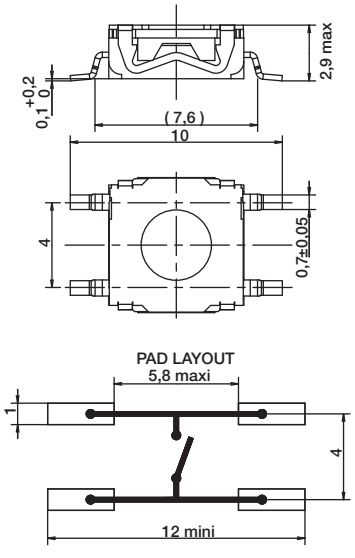

12 MM

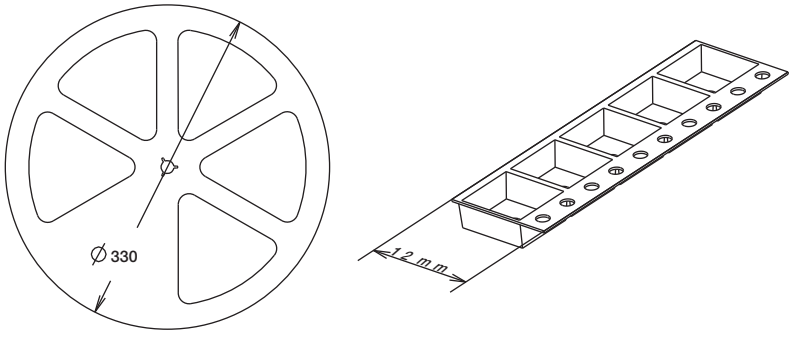

16 MM

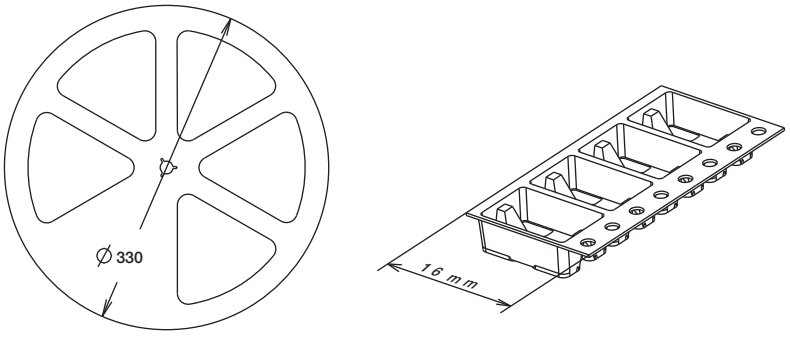

12 mm	Pieces	16 mm	Pieces
KSC1J	2,000	KSC1G	2,000
KSC2J	2,000	KSC2G	2,000
KSC3J	2,000	KSC3G	2,000
		KSC4J & G	1,000
		KSC5J & G	1,000
		KSC6J & G	750
		KSC7J & G	1,000
		KSC8J & G	1,000
		KSC9J & G	750
		KSC10J & G	1,000

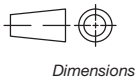

Dimensions are shown: mm
Specifications and dimensions subject to change

KSC1 without actuator 2,5 mm high

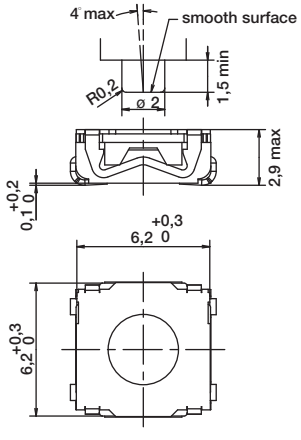

Type	Operating force FA (Newtons)	Operating life (operations)	Travel (mm)
KSC121	1.8 ± 0.65	200,000	0.3 ± 0.15
KSC141	3 ± 0.75	200,000	0.3 ± 0.15
KSC151	5.5 ± 1.4	100,000	0.35 ± 0.15

Packaging

Switches delivered on continuous tape & reels of 2,000 pieces
Dimensions according to EIA RS-481/ IEC 60286-3 standard
External diameter 330 ± 2 mm

How To Order

Our easy build-a-switch concept allows you to mix and match options to create the switch you need. To order, select desired option from each category and place it in the appropriate box.

However, please note that all the combinations of these options are not feasible.
For any part number different from those listed above, please consult your local representative.

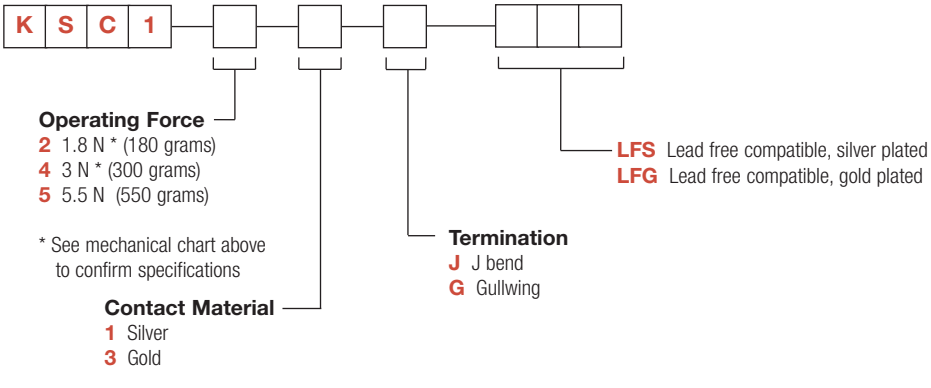

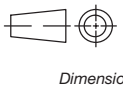
First Angle Projection

Dimensions are shown: mm
Specifications and dimensions subject to change

KSC2 Series
Sealed Tact Switch for SMT

KSC2 soft actuator 3,5 mm high

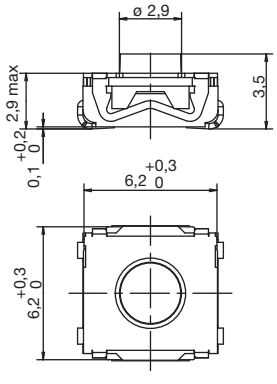

Type	Operating force FA (Newtons)	Operating life (operations)	Travel (mm)
KSC201	1.6 ± 0.6	5,000,000	0.3 ± 0.2
KSC221	2 ± 0.5	500,000	0.35 + 0.3/- 0.1
KSC222	2 ± 0.5	1,000,000	0.35 ± 0.15
KSC241	3.5 ± 0.9	300,000	0.5 ± 0.2
KSC251	5.55 ± 1.45	300,000	0.5 ± 0.2
KSC231 SPD	3.5 ± 0.9	300,000	0.5 ± 0.2
KSC241 SPD	3.55 ± 0.9	300,000	0.5 ± 0.2
KSC251 SPD	6.2 ± 1.55	100,000	0.6 ± 0.2

Packaging

Switches delivered on continuous tape & reels of 2,000 pieces
Dimensions according to EIA RS-481/ IEC 60286-3 standard
External diameter 330 ± 2 mm

How To Order

Our easy build-a-switch concept allows you to mix and match options to create the switch you need. To order, select desired option from each category and place it in the appropriate box.

However, please note that all the combinations of these options are not feasible.
For any part number different from those listed above, please consult your local representative.

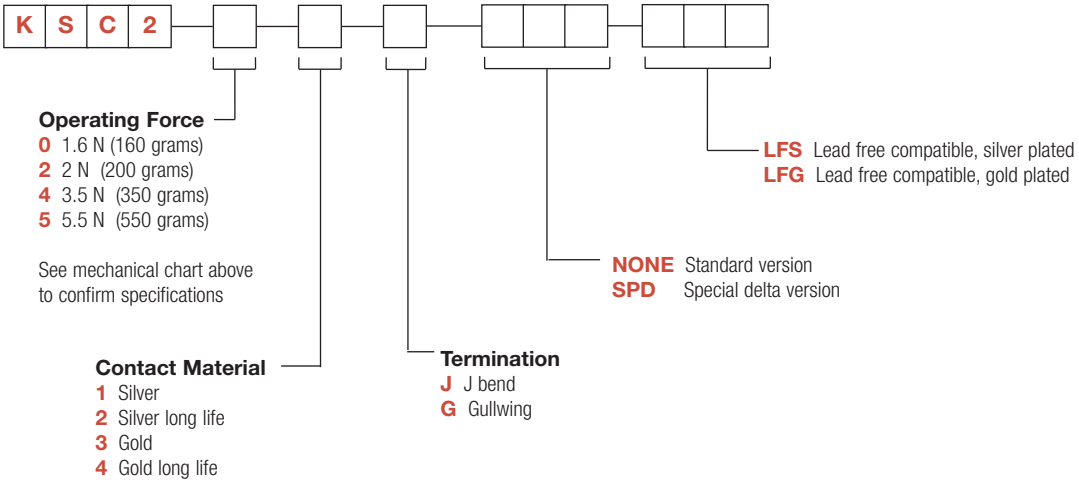

First Angle Projection

Dimensions are shown: mm
Specifications and dimensions subject to change

KSC3 hard actuator 3,5 mm high

Type	Operating force FA (Newtons)	Operating life (operations)	Travel (mm)
KSC321	2 ± 0.4	300,000	0.2 + 0.3/- 0
KSC341	3 ± 0.75	300,000	0.2 + 0.3/- 0
KSC351	5 ± 1	100,000	0.25 + 0.3/- 0

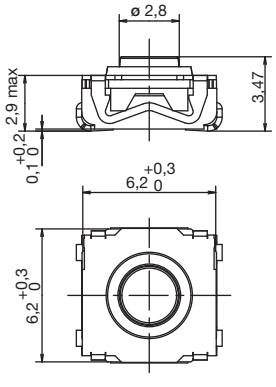

Packaging

Switches delivered on continuous tape & reels of 2,000 pieces
Dimensions according to EIA RS-481/ IEC 60286-3 standard
External diameter 330 ± 2 mm

How To Order

Our easy build-a-switch concept allows you to mix and match options to create the switch you need. To order, select desired option from each category and place it in the appropriate box.

However, please note that all the combinations of these options are not feasible.
For any part number different from those listed above, please consult your local representative.

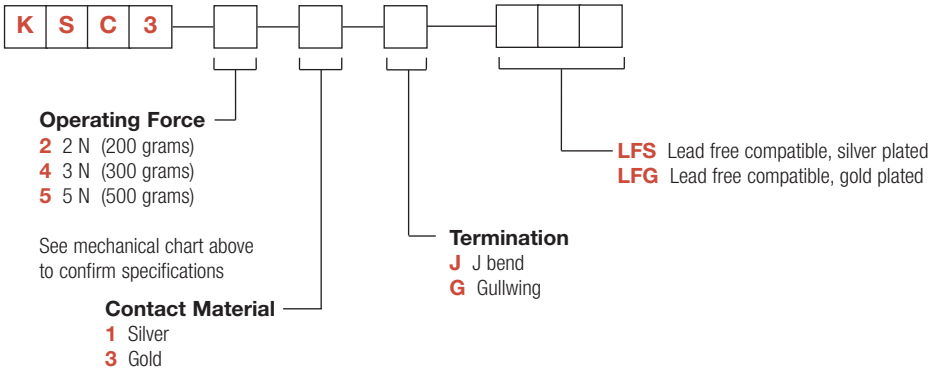

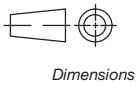

Dimensions are shown: mm
Specifications and dimensions subject to change

KSC4 Series
Sealed Tact Switch for SMT

KSC4 soft actuator 5,2 mm high

Type	Operating force FA (Newtons)	Operating life (operations)	Travel (mm)
KSC401 50SH	1.45 ± 0.55	5,000,000	0.5 ± 0.25
KSC411 70SH	1.4 ± 0.35	1,000,000	0.35 ± 0.20
KSC421 70SH	1.7 ± 0.45	300,000	0.5 ± 0.25
KSC422 70SH	1.7 ± 0.45	1,000,000	0.5 ± 0.25
KSC441 70SH	4 ± 1	300,000	0.75 ± 0.25
KSC442 70SH	4 ± 1	1,000,000	0.75 ± 0.25
KSC451 70SH	4.25 ± 0.75	300,000	0.8 ± 0.2
KSC441 SPD	3.5 ± 0.9	300,000	0.7 ± 0.2
KSC441 ST1	3.4 ± 1	300,000	0.7 ± 0.25
KSC441 ST2	3.4 ± 1	300,000	0.35 ± 0.20
KSC461 ST1	6.25 ± 1.75	100,000	1 ± 0.3
KSC461 ST2	6.25 ± 1.75	300,000	0.5 ± 0.2

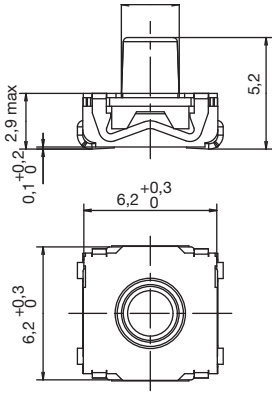

Packaging

Switches delivered on continuous tape & reels of 1,000 pieces
Dimensions according to EIA RS-481/ IEC 60286-3 standard
External diameter 330 ± 2 mm

How To Order

Our easy build-a-switch concept allows you to mix and match options to create the switch you need. To order, select desired option from each category and place it in the appropriate box.

However, please note that all the combinations of these options are not feasible.
For any part number different from those listed above, please consult your local representative.

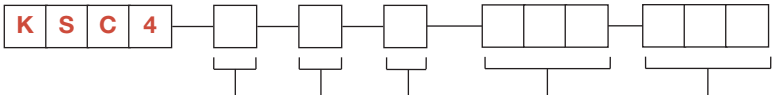

Operating Force
0 1.45 N (145 grams)
1 1.4N (140 grams)
2 1.7 N (170 grams)
4 4 N (400 grams)
5 4.25 N (425 grams)
6 6.25 N (625 grams)
See mechanical chart above to confirm specifications

Contact Material
1 Silver
2 Silver long life
3 Gold
4 Gold long life

Termination
J J bend
G Gullwing

50SH 50 shore **
70SH 70 shore ***
SPD Special delta version
ST1 High click
ST2 Low click

LFS Lead free compatible, silver plated
LFG Lead free compatible, gold plated

** applies to KSC401J50SH only
*** applies to KSC411J70SH, KSC421J70SH and KSC441J70SH

First Angle Projection

Dimensions are shown: mm
Specifications and dimensions subject to change

KSC5 hard actuator 5,6 mm high

Type	Operating force axial FA N (grams)	Operating force lateral FL N (grams) ±30%	Travel to make axial (mm)	Travel to make lateral (mm)	Life expectancy cycles, axial	Life expectancy cycles, lateral
KSC521	2 ± 0.5	1.2 - 2.6	0.25 ± 0.15	0.5 ± 0.25	100,000	10,000
KSC541	3 ± 0.75	1.8 - 3.8	0.25 ± 0.15	0.5 ± 0.25	100,000	10,000

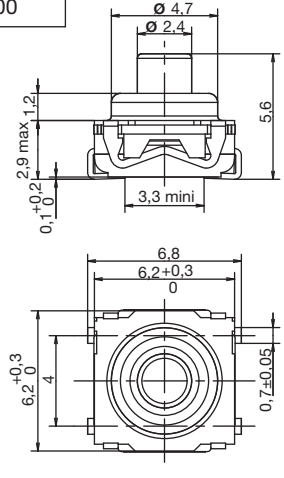

Packaging

Switches delivered on continuous tape & reels of 1,000 pieces, dimensions according to EIA RS-481/ IEC 60286-3 standard
External diameter 330 ± 2 mm

How To Order

Our easy build-a-switch concept allows you to mix and match options to create the switch you need. To order, select desired option from each category and place it in the appropriate box.

However, please note that all the combinations of these options are not feasible.
For any part number different from those listed above, please consult your local representative.

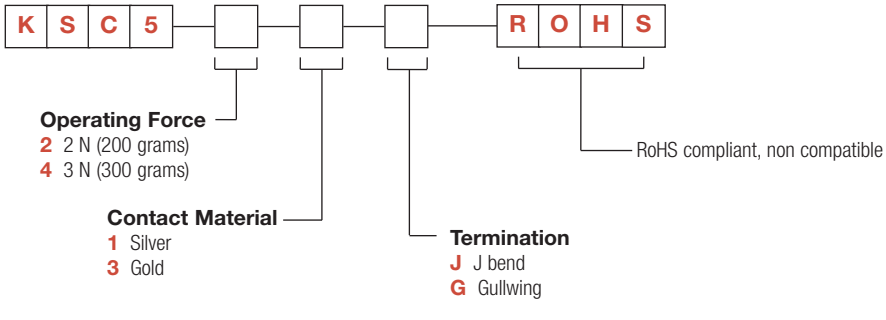

First Angle Projection

Dimensions are shown: mm
Specifications and dimensions subject to change

KSC6 Series
Sealed Tact Switch for SMT

KSC6 hard actuator 7,7 mm high

Type	Operating force FA (Newtons)	Operating life (operations)	Travel (mm)
KSC621	1.7 ± 0.5	300,000	0.4 ± 0.2
KSC631	2.55 ± 0.65	300,000	0.4 ± 0.2
KSC641	3.4 ± 0.85	300,000	0.4 ± 0.2

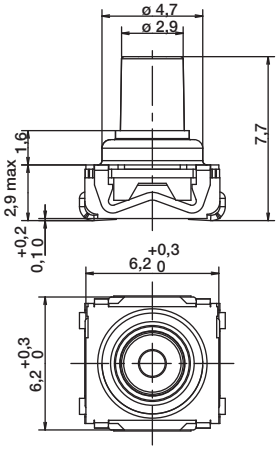

Packaging

Switches delivered on continuous tape & reels of 750 pieces
Dimensions according to EIA RS-481/ IEC 60286-3 standard
External diameter 330 ± 2 mm

How To Order

Our easy build-a-switch concept allows you to mix and match options to create the switch you need. To order, select desired option from each category and place it in the appropriate box.

However, please note that all the combinations of these options are not feasible.
For any part number different from those listed above, please consult your local representative.

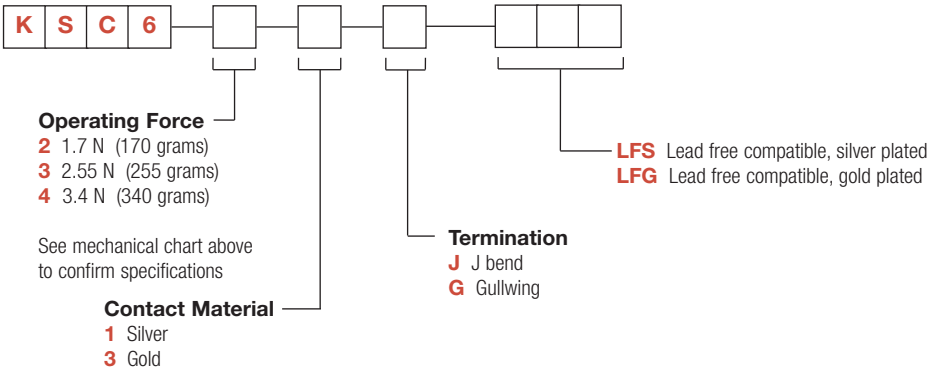

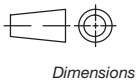

Dimensions are shown: mm
Specifications and dimensions subject to change

KSC7 soft actuator 4,3 mm high

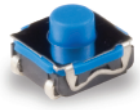

Type	Operating force FA (Newtons)	Operating life (operations)	Travel (mm)
KSC701	1.6 ± 0.6	5,000,000	0.3 ± 0.2
KSC721	2.25 ± 0.55	300,000	0.3 ± 0.15
KSC741	3.9 ± 1	300,000	0.4 ± 0.2

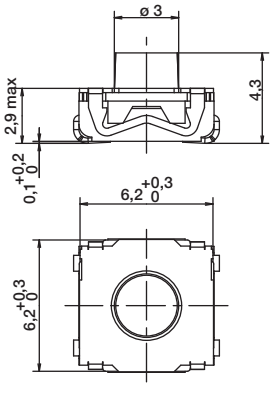

Packaging

Switches delivered on continuous tape & reels of 1,000 pieces
Dimensions according to EIA RS-481/ IEC 60286-3 standard
External diameter 330 ± 2 mm

How To Order

Our easy build-a-switch concept allows you to mix and match options to create the switch you need. To order, select desired option from each category and place it in the appropriate box.

However, please note that all the combinations of these options are not feasible.
For any part number different from those listed above, please consult your local representative.

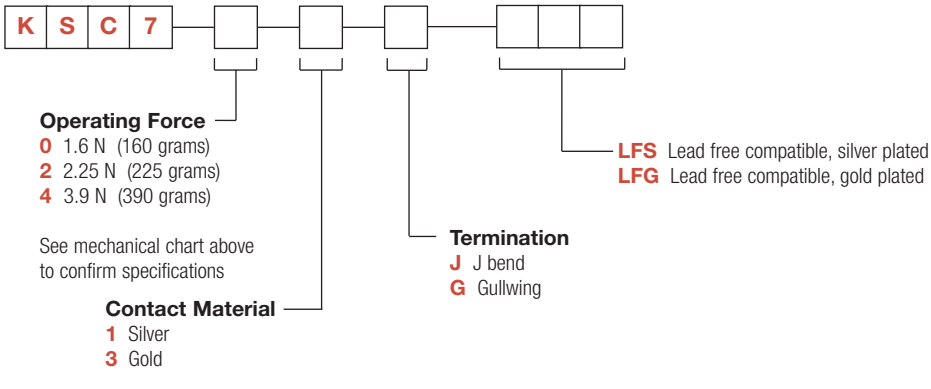

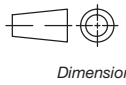

Dimensions are shown: mm
Specifications and dimensions subject to change

KSC8 Series
Sealed Tact Switch for SMT

KSC8 hard actuator 4,9 mm high

Type	Operating force FA (Newtons)	Operating life (operations)	Travel (mm)
KSC821	3.15 ± 0.75	300,000	0.65 ± 0.2
KSC821 OL	1.7 ± 0.5	300,000	0.4 ± 0.2
KSC831 OL	2.55 ± 0.65	300,000	0.4 ± 0.2
KSC841 OL	3.4 ± 0.85	300,000	0.4 ± 0.2

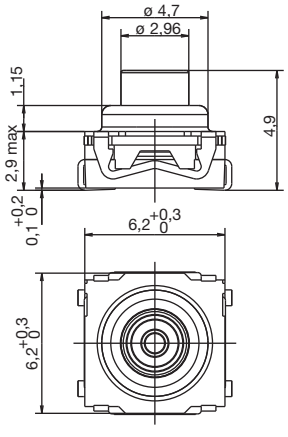

Packaging

Switches delivered on continuous tape & reels of 1,000 pieces
Dimensions according to EIA RS-481/ IEC 60286-3 standard
External diameter 330 ± 2 mm

How To Order

Our easy build-a-switch concept allows you to mix and match options to create the switch you need. To order, select desired option from each category and place it in the appropriate box.

However, please note that all the combinations of these options are not feasible.
For any part number different from those listed above, please consult your local representative.

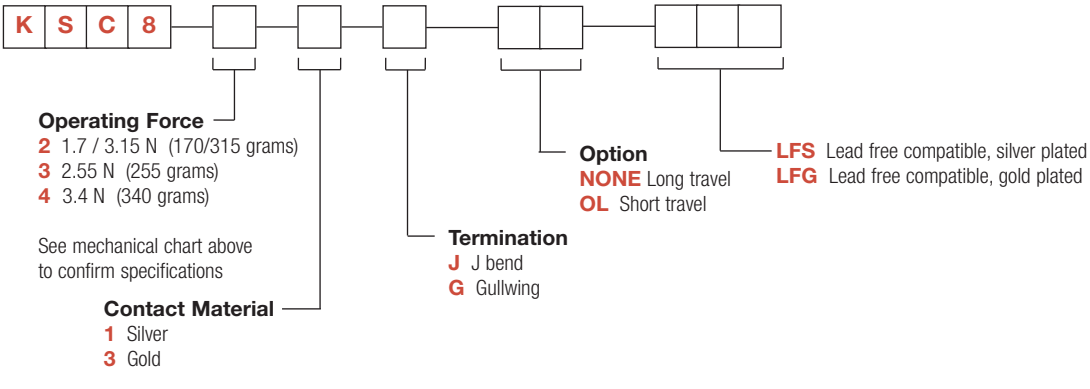

Dimensions are shown: mm
Specifications and dimensions subject to change

KSC9 hard actuator 7,7 mm high

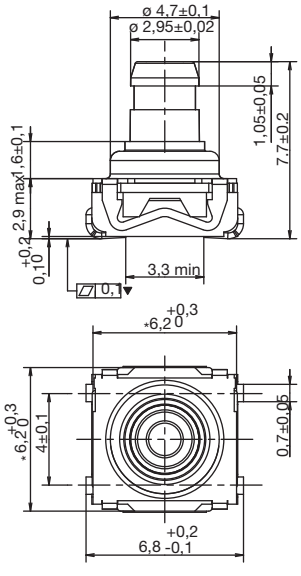

Type	Operating force FA (Newtons)	Operating life (operations)	Travel (mm)
KSC921	1.7 ± 0.5	300,000	0.4 ± 0.2
KSC931	2.25 ± 0.65	300,000	0.4 ± 0.2
KSC941	3.4 ± 0.85	300,000	0.4 ± 0.2

Packaging

Switches delivered on continuous tape & reels of 750 pieces
Dimensions according to EIA RS-481/ IEC 60286-3 standard
External diameter 330 ± 2 mm

How To Order

Our easy build-a-switch concept allows you to mix and match options to create the switch you need. To order, select desired option from each category and place it in the appropriate box.
For any part number different from those listed above, please consult your local representative.

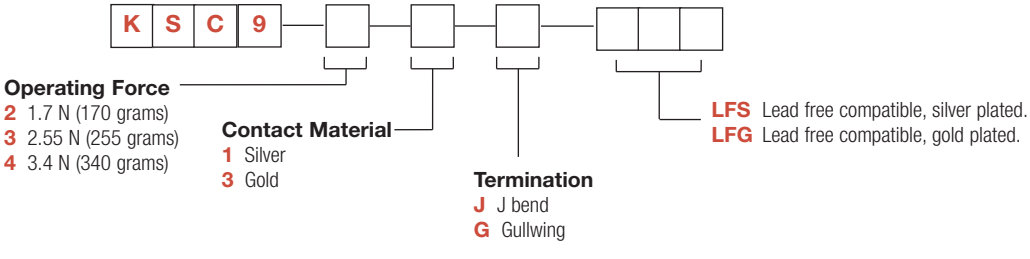

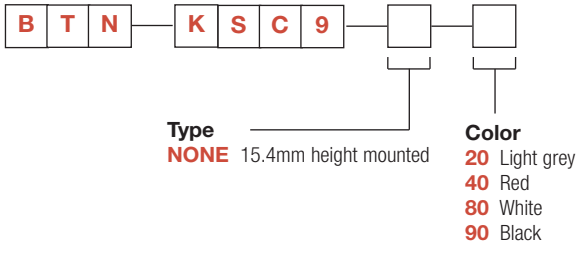

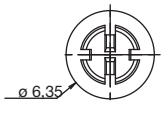

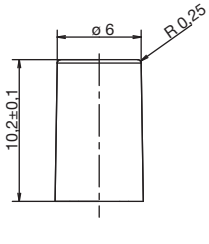

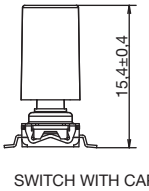

SWITCH WITH CAP

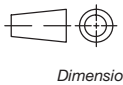

First Angle Projection

Dimensions are shown: mm
Specifications and dimensions subject to change

KSC10 Series
Sealed Tact Switches for SMT

KSC10 soft actuator 4,9 mm high

Type	Operating force FA (Newtons)	Operating life (operations)	Travel (mm)
KSC1001	1.45 ± 0.55	5,000,000	0.45 ± 0.25

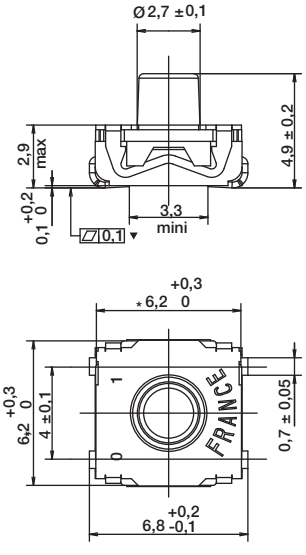

Packaging

Switches delivered on continuous tape & reels of 1,000 pieces
Dimensions according to EIA RS-481/ IEC 60286-3 standard
External diameter 330 ± 2 mm

How To Order

Our easy build-a-switch concept allows you to mix and match options to create the switch you need. To order, select desired option from each category and place it in the appropriate box.

However, please note that all the combinations of these options are not feasible.
For any part number different from those listed above, please consult your local representative.

K S C 10 — 0 — 1 — [ ] — L F S

Operating Force
0 1.45 N (145 grams)

See mechanical chart above to confirm specifications

Contact Material
1 Silver

Termination
J J bend
G Gullwing

LFS Lead free compatible, silver plated

Note: KSC10 offered with yellow actuator as standard, hardness 55 Shore

First Angle Projection

Dimensions are shown: mm
Specifications and dimensions subject to change

KSC4V2 Series
Side Actuated Sealed Tact Switch

Features/Benefits

- ***Full SMD side actuated***
- ***Haptic adaptability***
- ***Pin in paste terminations***
- ***Tape & reel***
- ***IP67***

Typical Applications

- ***Automotive***
- ***Industrial electronics***
- ***Network equipment***
- ***Telecommunications***

Specification

FUNCTION: momentary action
CONTACT ARRANGEMENT: 1 make contact = SPST, N.O.
TERMINALS:
2 pin in paste signal terminals
3 SMD ground terminals

Mechanical

Type	Force (N)	Operating Life (operations)	Travel (mm)
KSC441V2SPDLFS	3.5 ± 1.0	300,000	0.7 ± 0.2
KSC421V270SHLFS	1.55 ± 0.45	300,000	0.5 ± 0.2

NOTE: Basic version is based on KSC441V2 SPDELTA LFS.
Other configurations of haptics are available upon demand.

MISUSE OVERLOAD: 40N with back support
SHEAR FORCE:10N without back support

Electrical

	Silver	Gold
MAXIMUM POWER:	1 VA	0.2 VA
MAXIMUM VOLTAGE:	32 VDC	32 VDC
MINIMUM VOLTAGE:	20 mV	20 mV
MAXIMUM CURRENT:	50 mA	10 mA
MINIMUM CURRENT:	1 mA	0.1 mA

DIELECTRIC STRENGTH (50 Hz, 1 min.): ≥ 250 Vrms
CONTACT RESISTANCE: ≤ 100 mΩ
INSULATION RESISTANCE (100 V, initial stage): > 10^9 Ω
BOUNCE TIME: < 1 ms

Environmental

	Silver	Gold
OPERATING TEMPERATURE:	-40˚C to 85˚C	-40˚C to 125˚C
STORAGE TEMPERATURE:	-55˚C to 85˚C	-55˚C to 125˚C

Process

SOLDERING: Depending on the application, this component is suited to the following methods:

– Cleaning according to typical washing processes.
– Infrared Reflow Soldering in accordance with IEC 61760-1.

TERMINALS: pin in paste, silver or gold plated
TOP PLATE: tin plated
MSL level: 1
Vacuum pick head mandatory

Packaging

In reels of 500 pieces.
Dimensions of reels according to EIA RS481 or IEC 2863.
External diameter 330 mm ± 2 mm.

NOTE: This product is designed and manufactured for general electronic devices. For systems where reliability and safety are required, please contact your sales representative to secure product integration and function to secure usage.

How To Order

Our easy build-a-switch concept allows you to mix and match options to create the switch you need. To order, select desired option from each category and place it in the appropriate box.
For any part number different from those listed above, please consult your local representative.

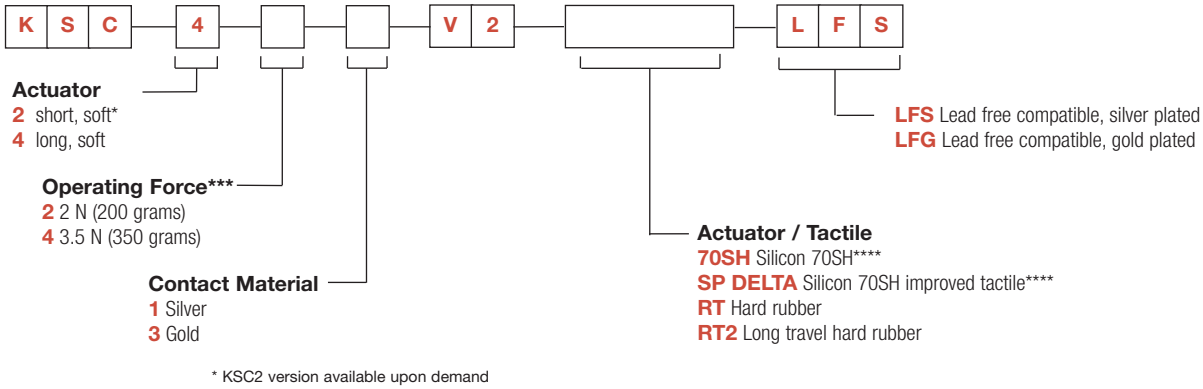

* KSC2 version available upon demand
*** Force available upon demand (variant version)
**** Available for KSC4 only

Dimensions are shown: mm
Specifications and dimensions subject to change

KSC4V2 Series
Side Actuated Sealed Tact Switch

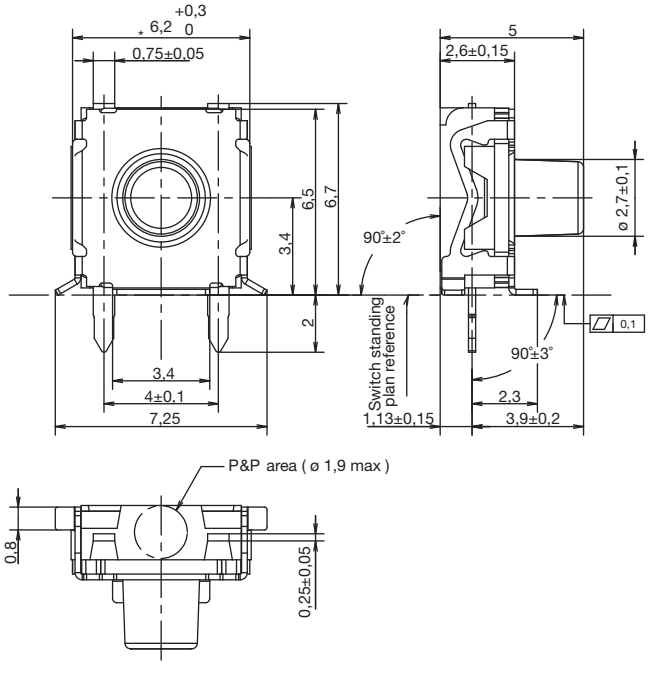

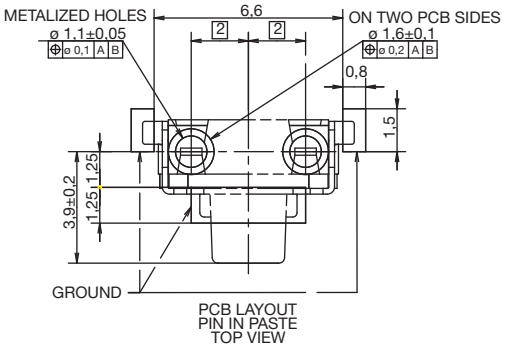

TAPE AND REEL

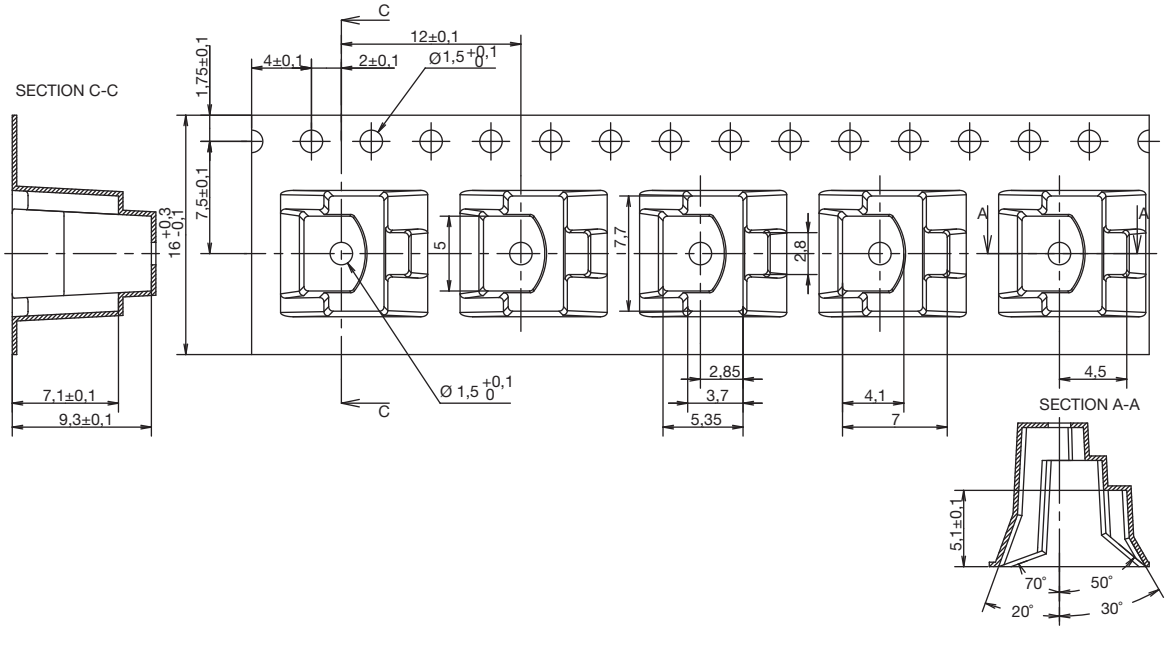

INTEGRATION

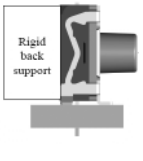

First Angle Projection

Dimensions are shown: mm
Specifications and dimensions subject to change

Features/Benefits

- *Low profile*
- *Cost efficient*
- *J or G terminations*
- *Tape and reel*
- *IP67*

Typical Applications

- *Smart meters*
- *Home appliances*
- *Consumer electronics*
- *Industrial electronics*
- *Telecommunications*

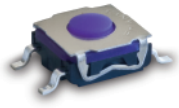

Specification

FUNCTION: momentary action
CONTACT ARRANGEMENT: 1 make contact = SPST, N.O.
TERMINALS: J bend & Gullwing type for SMT

Mechanical

Type	Operating Force FA (Newtons) Min. Max.	Operating Life Operations	Travel (mm)
KSEM31JLFS	1,6 ± 0,6	300,000	0,3 + 0,1/-0,2
KSEM31GLFS	1,6 ± 0,6	300,000	0,3 + 0,1/-0,2
KSEK43JLFS	2,25 ± 0,75	300,000	0,3 ± 0,2
KSEK43GLFS	2,25 ± 0,75	300,000	0,3 ± 0,2

NOTE: For cost effectiveness the tactile feeling is not specified and can change along production. If your application requires a defined tactile effect, please consider KSC series for your application.

Packaging

In reels of 2,000 pieces
Dimensions of reels according to EIA RS481 or IEC 2863.
External diameter 330 mm ± 2 mm.

Electrical

MAXIMUM POWER: 1 VA
MINIMUM/MAXIMUM VOLTAGE: 20 mV / 32 VDC
MINIMUM/MAXIMUM CURRENT: 1 mA /50 mA
DIELECTRIC STRENGTH: (50 Hz, 1 min.): ≥ 250 V
CONTACT RESISTANCE: ≤ 100 mΩ
INSULATION RESISTANCE: (100 V): ≥ 10^9 Ω
BOUNCE TIME: ≤ 1 ms

Environmental

OPERATING TEMPERATURE: -40˚C to 85˚C
STORAGE TEMPERATURE: -55˚C to 85˚C

Process

SOLDERING: Depending on the application, this component is suited to the following methods:
– Cleaning according to typical washing processes.
– Infrared Reflow Soldering in accordance with IEC 61760-1.

NOTE:
Specifications listed above are for switches with standard options. KSE series is not subject to adaptation and/or modification for specific use. If you require additional features, please refer to the KSC series. KSE is not recommended for applications requiring high level of performance such as aerospace, automotive and some industrial applications.

How To Order

Our easy build-a-switch concept allows you to mix and match options to create the switch you need. To order, select desired option from each category and place it in the appropriate box.

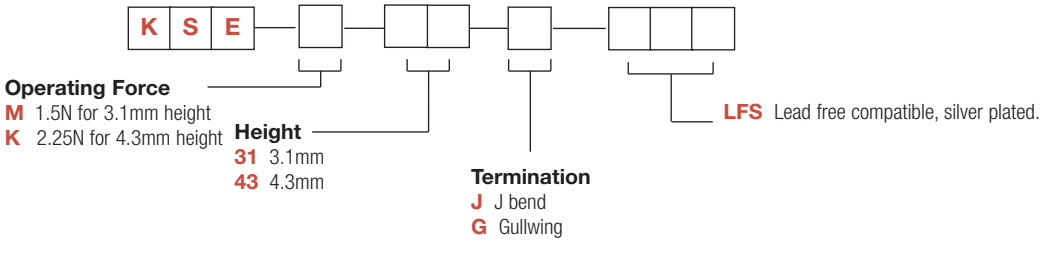

KSE Series
Low Profile Tact Switch

HEIGHT

31 3.1 MM HEIGHT

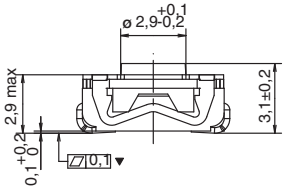

43 4.3 MM HEIGHT

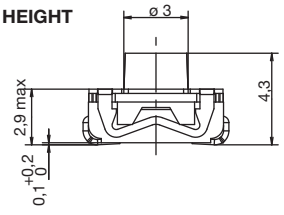

TERMINATION

G GULLWING

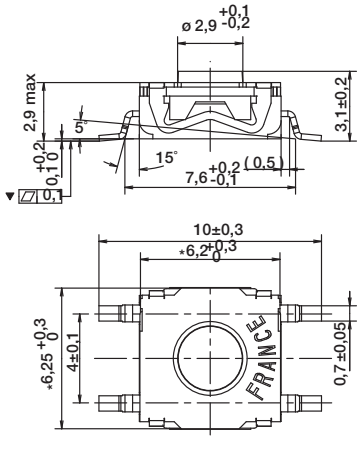

PAD LAYOUT

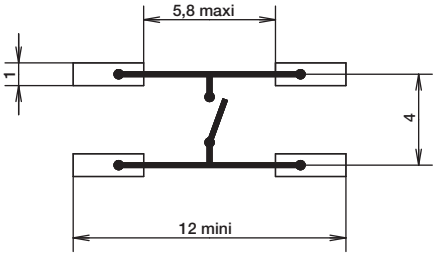

J J BEND

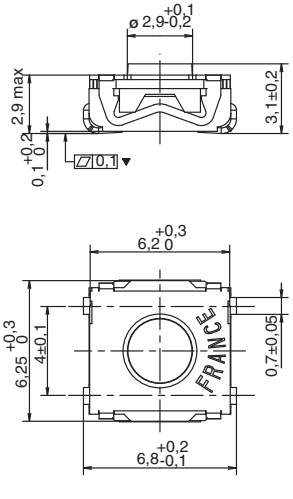

PAD LAYOUT

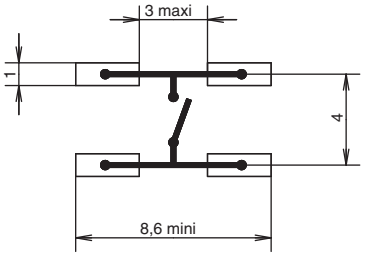

TAPE & REEL

12 mm height

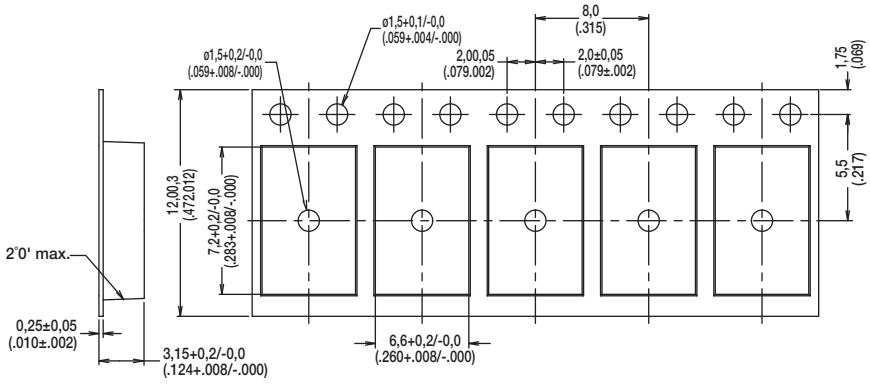

16 mm height

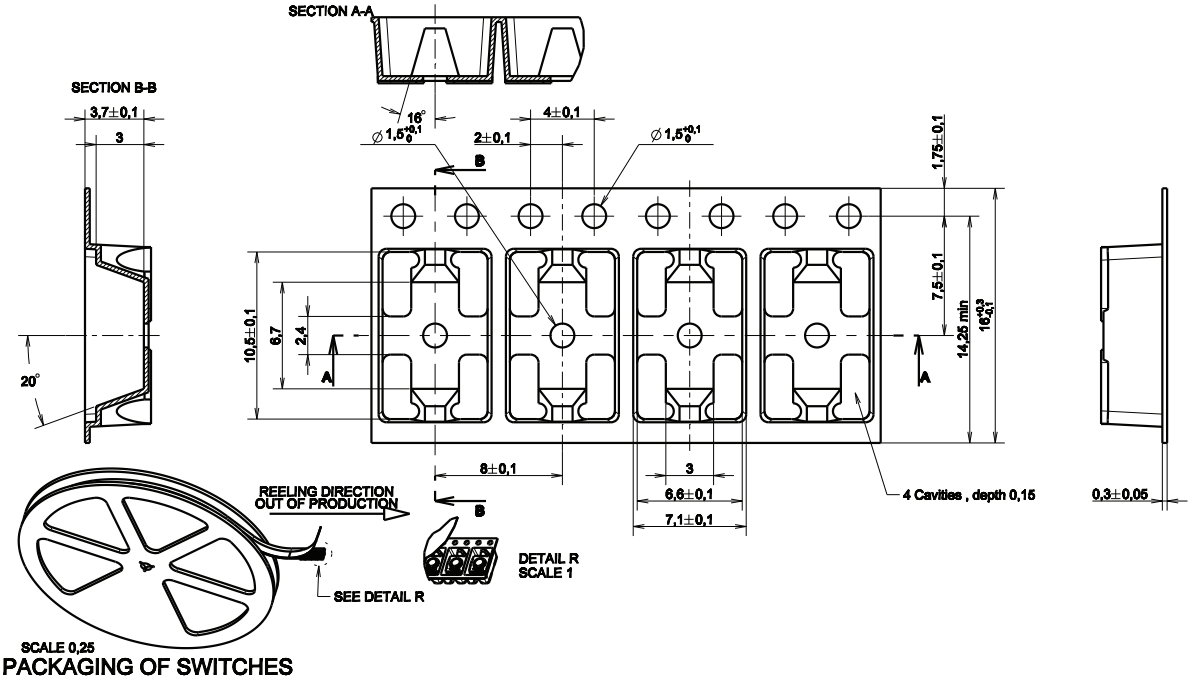

PACKAGING OF SWITCHES

KT Series
Full SMT Top & Side Actuated Sealed Tact Switch

Features/Benefits

- ***Full SMT side-actuated tact switch***
- ***SMT top-actuated tact switch with G or J terminations***
- ***High shear force with extended bracket***
- ***Easy to pick & place with top plate tab***
- ***Rubber or hard plastic actuator***
- ***Press fit or snap fit caps***
- ***RoHS compliant and compatible***

Typical Applications

- ***Telecommunications***
- ***Computer products***
- ***Instrumentation***
- ***Power supply***

Specification

CONTACT ARRANGEMENT: SPST, N.O.
TERMINALS: SMT termination

Electrical

CONTACT RATING: 1.0 VA max. @ 32 V AC or DC max.
ELECTRICAL & MECHANICAL LIFE: 100,000 make-and-break cycles at full load.
DIELECTRIC STRENGTH: 250 Vrms min. @ sea level.
CONTACT RESISTANCE: Below 50 mΩ typ. initial @ 2-4 V DC, 100 mA.
INSULATION RESISTANCE: 10^9 Ω min.

Environmental

OPERATING TEMPERATURES: Ag version: -40˚C to 90˚C
Au version: -40˚C to 125˚C

Process

SOLDERABILITY: Per MIL-STD-202F method 208D, or EIA RS-186E method 9 (1 hour steam aging).
DEGREE OF PROTECTION: IP57; protection against harmful dust deposits, full-scale voltage protection.

Packaging

Switches supplied in anti-static tape and reels per EIA 481-2. Tape and cover strip are conductive for use near statically sensitive components.

NOTE: Specifications listed above are for switches with standard options.
For information on specific and custom switches, consult Customer Service Center.

How To Order

Our easy build-a-switch concept allows you to mix and match options to create the switch you need. To order, select desired option from each category and place it in the appropriate box.

However, please note that all the combinations of these options are not feasible.
For any part number different from those listed above, please consult your local representative.

SWITCH

K T 1 1 — [ ][ ] — [ ][ ][ ][ ] — 3 — [ ] — [ ][ ][ ]

Actuator
B0* Soft, flush
B1* Soft, 0,64 mm
B2* Soft, 2,24 mm
P2** Hard, 2,36 mm
P3** Hard, 1,12 mm
P4** Hard, 3,96 mm
S1*** ø0,1" for Press Fit Caps
S2*** ø0,14" for Snap Fit Caps (with anti-rotation)

Orientation and Mounting Style
SM Top Gullwing
JM Top J Bend ****

SAM Right angle
SA1M Right angle with front solder pad
SA2M Right angle with front solder pad and pick & place tab
SA3M Right angle with pick & place tab

3

Contact Plating
4 Silver
5 Gold

Contact Plating
LFS RoHS compliant and compatible. Silver plated
LFG RoHS compliant and compatible. Gold plated

* B0, B1 & B2 available with A, A1 & A3 mounting bracket only.
** P2, P3, P4 actuators suitable with A1 & A2 mounting bracket only.
*** S1 & S2 available with A1 & A2 mounting bracket only.
**** JM available with B0, B1, B2, P2, P3, P4 without mounting bracket.

BUTTON

To order buttons in bulk

B T N — K T 1 1 — [ ][ ] — [ ][ ]

Button Style
02 Press fit
03 Snap fit, high temperature

Button Color
90 Black
80 Ivory (natural)
40 Red

Dimensions are shown: mm
Specifications and dimensions subject to change

SERIES

KT11

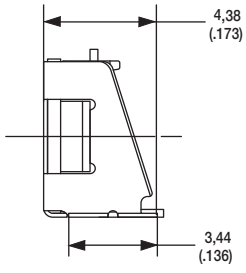

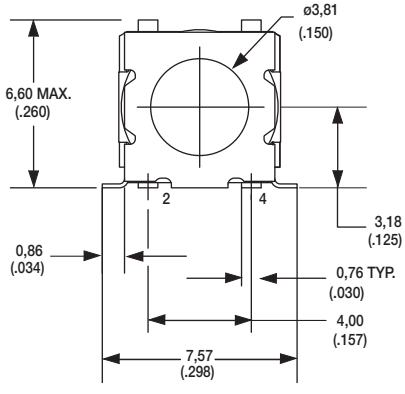

ACTUATOR

B0 SOFT, FLUSH*

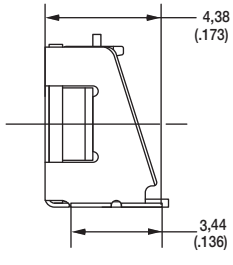

B1 SOFT, 0,64 mm*

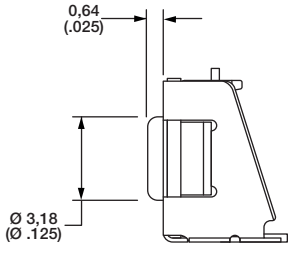

B2 SOFT, 2,24 mm*

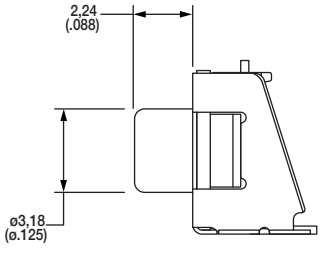

P2 HARD, 2,36 mm

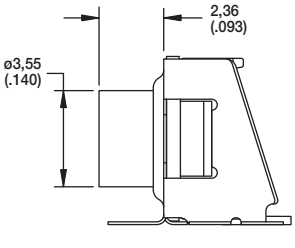

P3 HARD, 1,12 mm

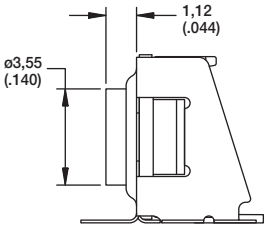

P4 HARD, 3,96 mm**

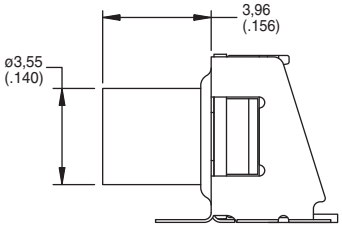

S1 Ø0,1" FOR PRESS FIT CAPS***

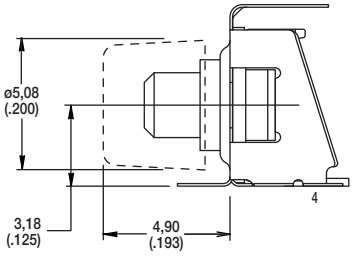

S2 Ø0,14" FOR SNAP FIT CAPS***

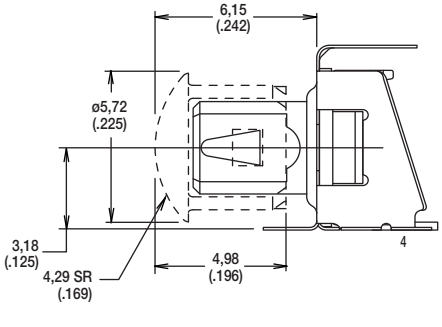

* B0, B1 & B2 available with A, A1 & A3 mounting bracket only.
** P2, P3, P4 actuators suitable with A1 & A2 mounting bracket only.
*** S1 & S2 available with A1 & A2 mounting bracket only.
**** JM available with B0, B1, B2, P2, P3, P4 without mounting bracket.

First Angle Projection

Dimensions are shown: mm
Specifications and dimensions subject to change

KT Series
Full SMT Top & Side Actuated Sealed Tact Switch

ORIENTATION & MOUNTING STYLE

SM TOP GULLWING

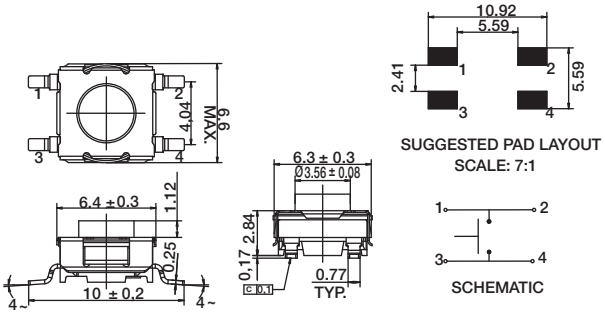

JM TOP J BEND

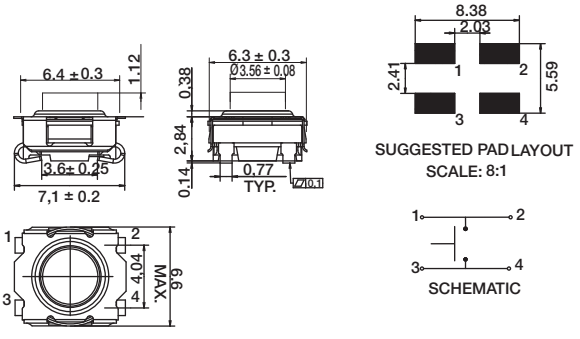

SAM RIGHT ANGLE

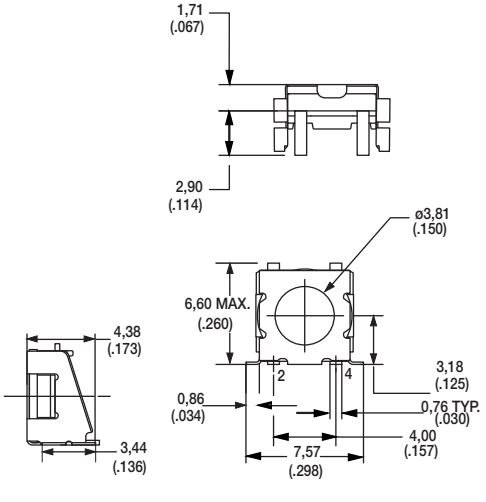

SA1M RIGHT ANGLE WITH FRONT SOLDER PAD

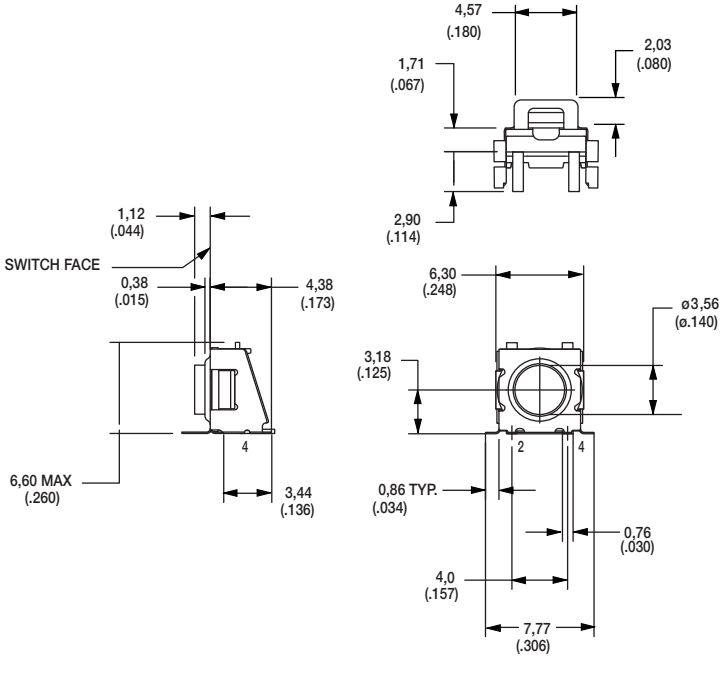

First Angle Projection

Dimensions are shown: mm
Specifications and dimensions subject to change

SA2M RIGHT ANGLE WITH FRONT SOLDER PAD AND PICK & PLACE TAB

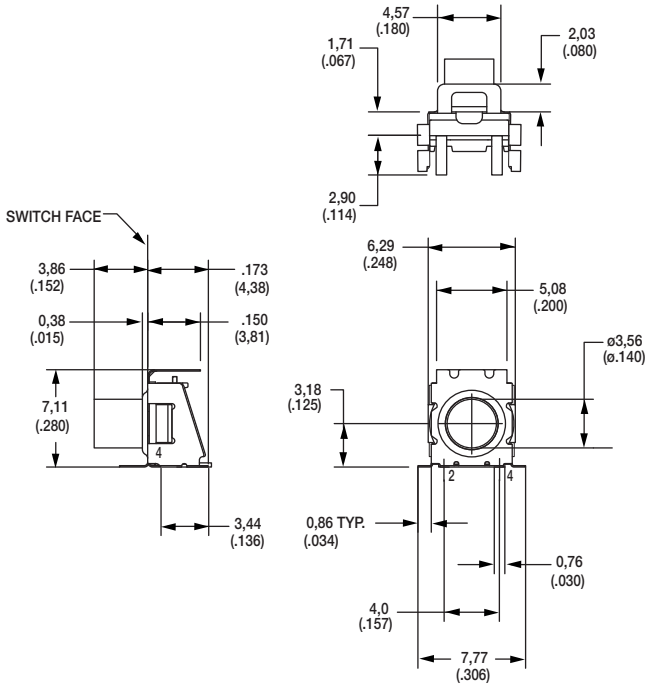

SA3M RIGHT ANGLE WITH PICK & PLACE TAB

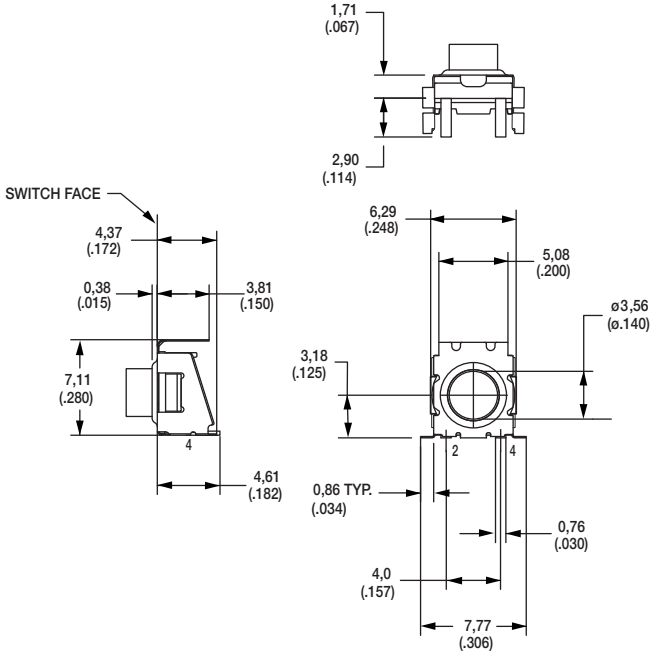

PAD LAYOUT
SA1M & SA2M MOUNTING BRACKET

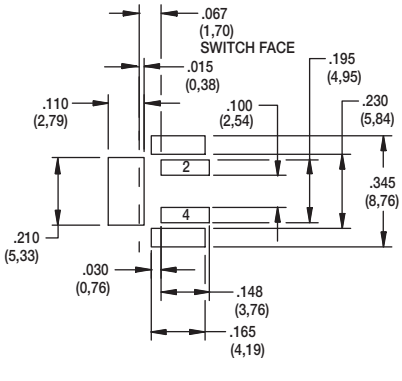

PAD LAYOUT
SAM & SA3M MOUNTING BRACKET

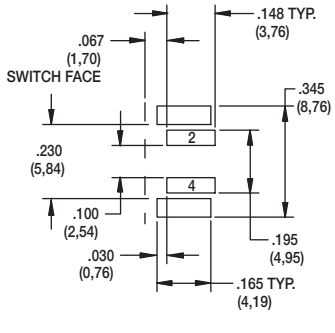

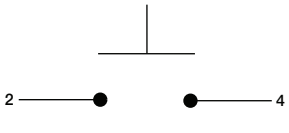

SCHEMATIC

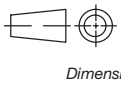

First Angle Projection

Dimensions are shown: mm
Specifications and dimensions subject to change

BUTTON

BUTTON

To order buttons in bulk

02 PRESS FIT

PART NUMBER	Internal Part Number	Button Color
BTN KT11 02 80	5081 01000	Ivory (Natural)
BTN KT11 02 90	5081 02000	Black
BTN KT11 02 40	5081 03000	Red

Materials: Nylon
Finish: Gloss

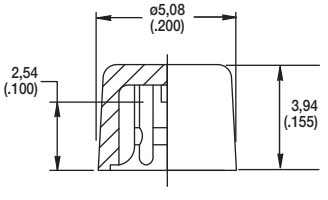

03 SNAP FIT, HIGH TEMPERATURE

PART NUMBER	Internal Part Number	Button Color
BTN KT11 03 80	685B 01000	Ivory (Natural)
BTN KT11 03 90	685B 02000	Black

Materials: Nylon
Finish: Gloss

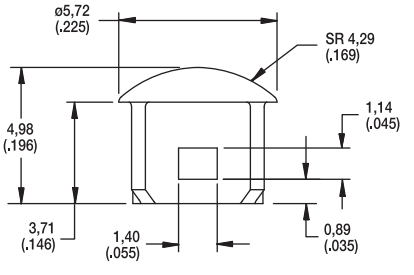

Features

- *High bright LED's*
- *Gold plated dome contact offering superior contact reliability in time*
- *Excellent ergonomics: sharp tactile feel and audible click*
- *Reduced space usage on board "2 in 1"*
- *40 N overload*
- *Tape and reel*
- *RoHS compliant and compatible*

Typical Applications

- *Application requiring illumination*
- *Server, storage*
- *Network infrastructure*
- *Telecom*
- *Medical*

Specification

FUNCTION: momentary action
CONTACT ARRANGEMENT: Normally Open
TERMINALS: SMT with positioning pegs;
SMT without positioning pegs is available, contact Customer Service

Mechanical

Type	Operating force FA[1] Newtons (grams)	Operating life (operations)	Travel (total travel) mm(mm)
K5AT WH 43GP	4.0 (400)	100,000	0,5 (0.8)

[1] Tolerances of operating force FA is ± 25%.

Packaging

Standard: 900 pcs per reel; Reel diameter 380 mm
Reduced: 180 pcs per reel; Reel diameter 180 mm

Electrical

POWER MIN/MAX: 0.02VA / 1.0VA
VOLTAGE MIN/MAX: 20mVdc – 32 Vdc
CURRENT MIN/MAX: 0.1mA – 100mA
CONTACT RESISTANCE: <100m Ω
INSULATION RESISTANCE: >1G Ω initial, >10M Ω after damp heat
BOUNCE TIME: <10ms

Environmental

OPERATING TEMPERATURE: -40˚C to 125˚C
STORAGE TEMPERATURE: -55˚C to 125˚C
RELATIVE HUMIDITY: 90 to 96% according to NF EN 60068-2-30
PROTECTION: dust protection and flux tight (IP 40)
OVERLOAD: 40N min

Process

SOLDERING: Compatible with the lead free soldering profile.
No washing

Materials

CONTACTS: Au over Ni
SOLDERING: Au over Ni
HOUSING: Thermoplastic UL94 V0

How To Order

Our easy build-a-switch concept allows you to mix and match options to create the switch you need. To order, select desired option from each category and and place it in the appropriate box.

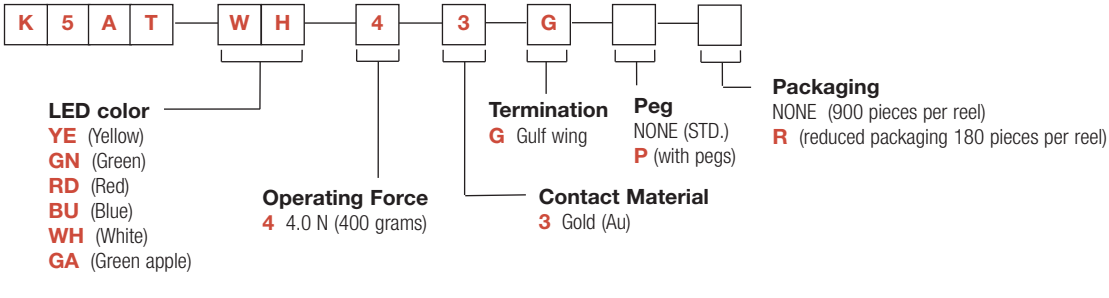

K5AT
Illuminated SMT Tact Switch

K5AT

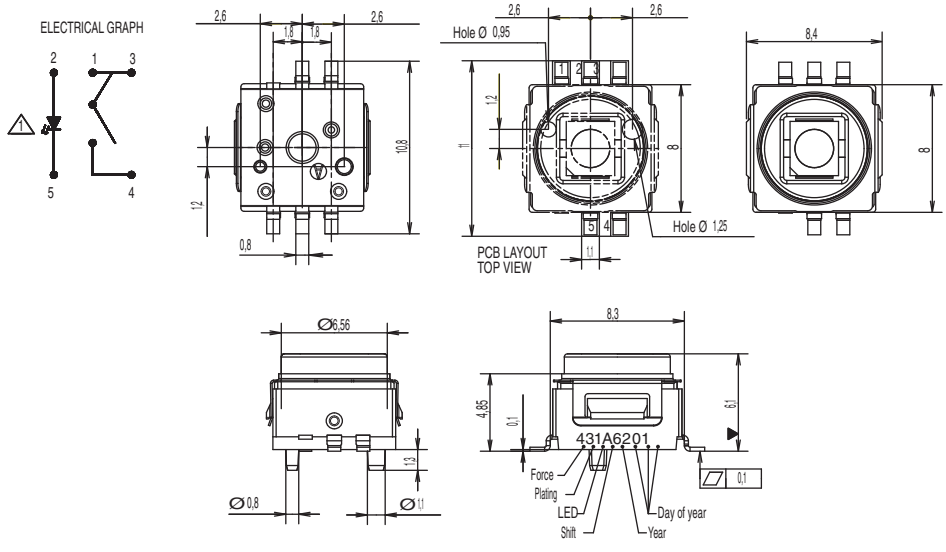

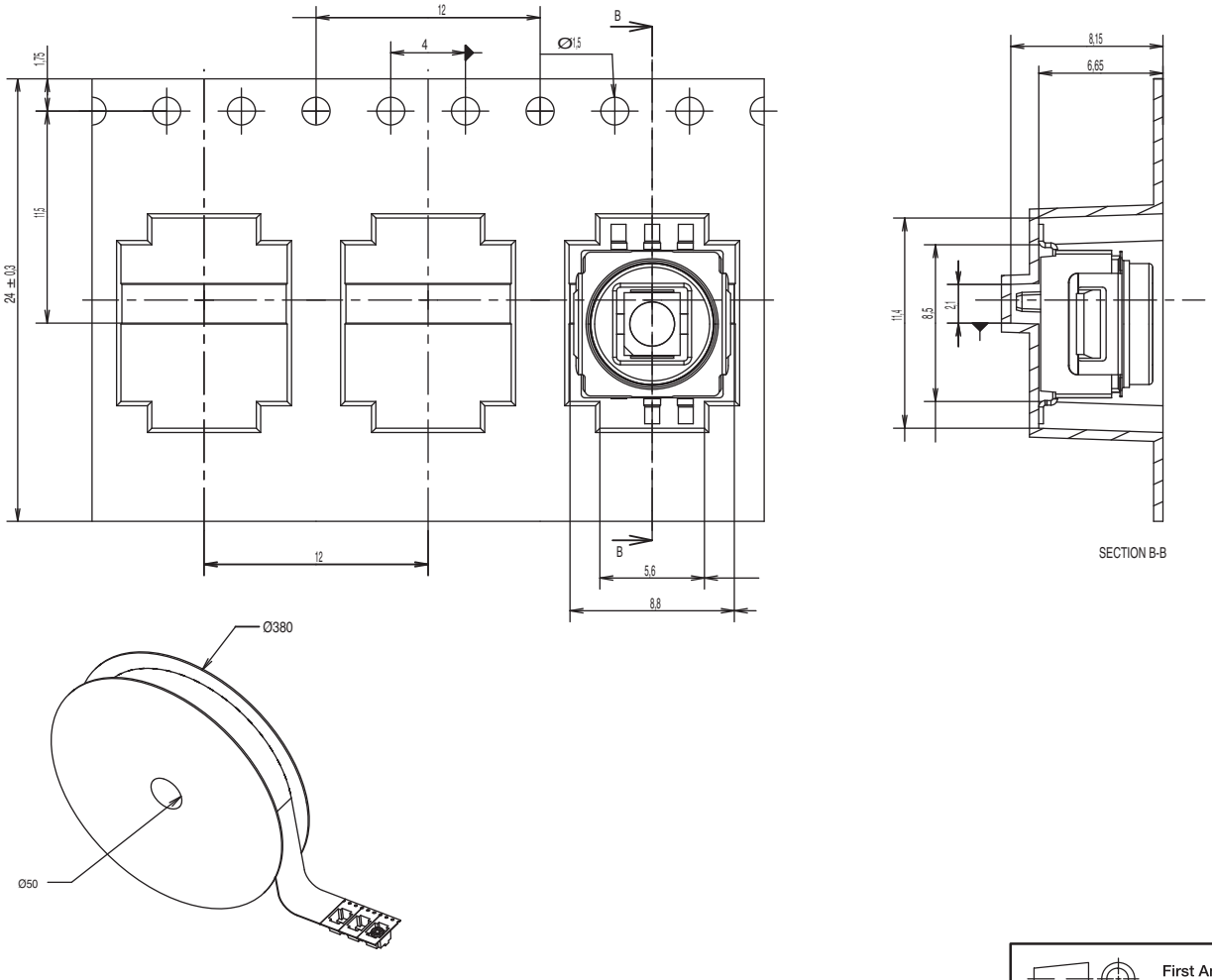

First Angle Projection

Dimensions are shown: mm
Specifications and dimensions subject to change

Lighted SMT Tact Switch with Rugged LED Mounting Process

Features

- *LED assembly without soldering*
- *Various LED options*
- *No light perturbation*
- *Sound haptic*
- *Various climatic classes*

Typical Applications

- *Automotive*
- *Network equipment*
- *Telecommunications*
- *Medical equipment*
- *Industrial controls*

Specification

FUNCTION: momentary action
CONTACT ARRANGEMENT: 1 make control = SPST, N.O.
TERMINALS: Gullwing type for SMT, peg as option, 2 terminals for LED

Mechanical

Type	Actuation Force (N)	Operating Life (operations)	Total Travel (mm)
K8xx41G LFS	4.0	300,000	0.45±0.15

Tolerances on actuation force is ± 0.25%.
SEALING LEVEL: IP40

Illumination Colors

White, blue, pure green, orange, super red
LED technical information available on product specification.
For any extra color, please contact your sales representative.

Packaging

In reels of 900 pieces under sealed foil.
Dimensions of reels according to EIA RS481 or IEC 2863.
External diameter 380 mm.

Electrical

	Silver	Gold
MAXIMUM POWER:	1.0 VA	0.2 VA
MAXIMUM VOLTAGE:	32 VDC	32 VDC
MINIMUM VOLTAGE:	20 mV	20 mV
MAXIMUM CURRENT:	50 mA	10 mA
MINIMUM CURRENT:	1 mA	0.1 mA

DIELECTRIC STRENGTH: (50 Hz, 1 min.) ≥ 250 Vrms
CONTACT RESISTANCE: < 100mΩ
INSULATION RESISTANCE: (100 V, inital stage) > $10^9\Omega$
BOUNCE TIME: < 10 ms

Environmental

OPERATING TEMPERATURE: -40˚C to +85˚C (Silver)
-40˚C to +125˚C (Gold)

STORAGE TEMPERATURE: -55˚C to +85˚C (Silver)
-40˚C to +125˚C (Gold)

Process

SOLDERING: Compatible with the lead free soldering profile.
No washing
MSL level: 5

NOTE:
The specifications show in the datasheet are for reference only and are not valid for design-in work. Please contact your sales representative to request drawings and product specifications.

For systems where reliability and safety are required, please contact your sales representative to secure product integration and function to secure usage.

How To Order

Our easy build-a-switch concept allows you to mix and match options to create the switch you need. To order, select desired option from each category and and place it in the appropriate box.

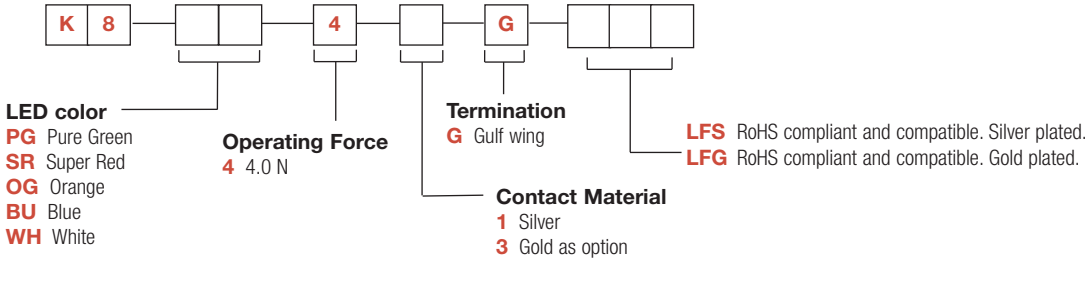

K8
Lighted SMT Tact Switch with Rugged LED Mounting Process

PART NUMBER	REF LED	EMITTED COLOR	LUMINOUS INTENSITY (mcd) If = 20 mA		CHROMATICITY COORDINATES OR PEAK WAVE LENGTH (typ) If = 20 mA		FORWARD VOLTAGE V If = 20 MA	
			min	typ	X	Y	min	max
K8WH41G	LW T67C-S2U1-5K8L	WHITE	224	560	0,33	0,33	3	4.1
K8BU41G	LB T67C-P2R1-35	BLUE	56	140	465 nm		3	4.1
K8PG41G	LP T676-L1M2-25	PURE GREEN	11.2	28	562 nm		1.8	2. 4
K8SR41G	LP T676-Q1R2-1	SUPER RED	71	180	645 nm		1.8	2.3
K8OG41G	LO T676-R1S2-24	ORANGE	112	280	610 nm		1.85	2.35

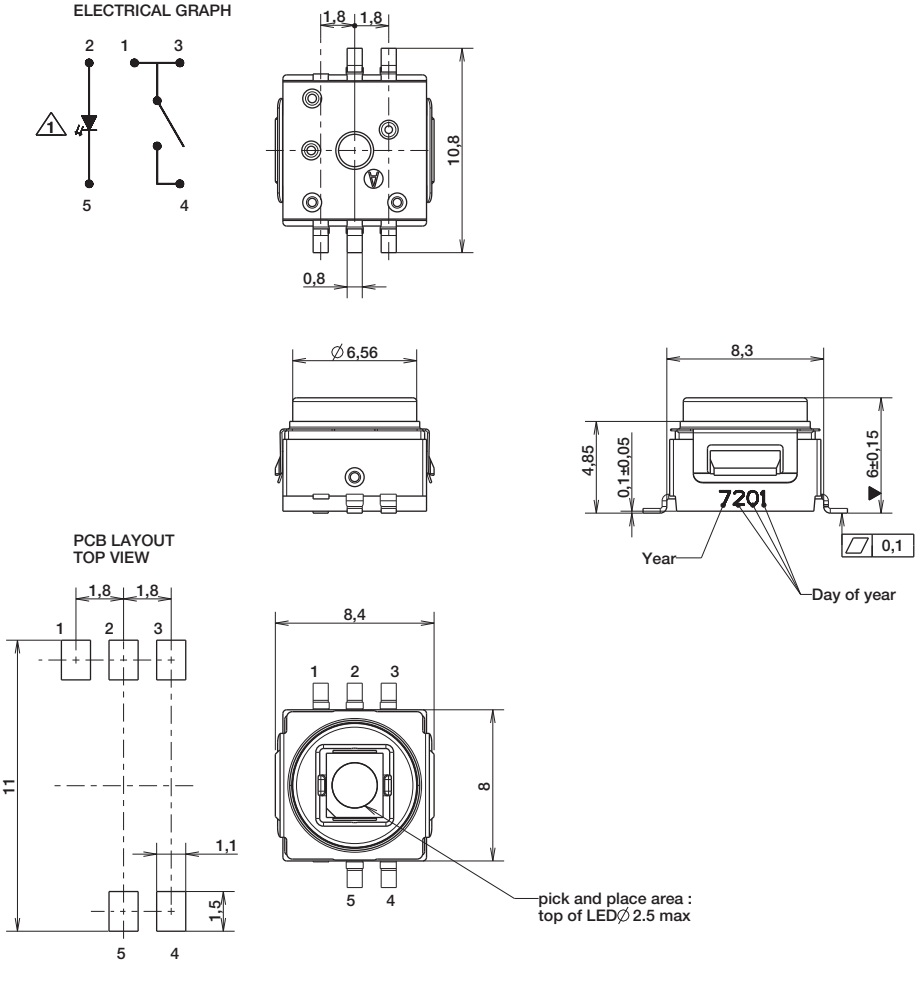

First Angle Projection

Dimensions are shown: mm
Specifications and dimensions subject to change

TAPE & REEL

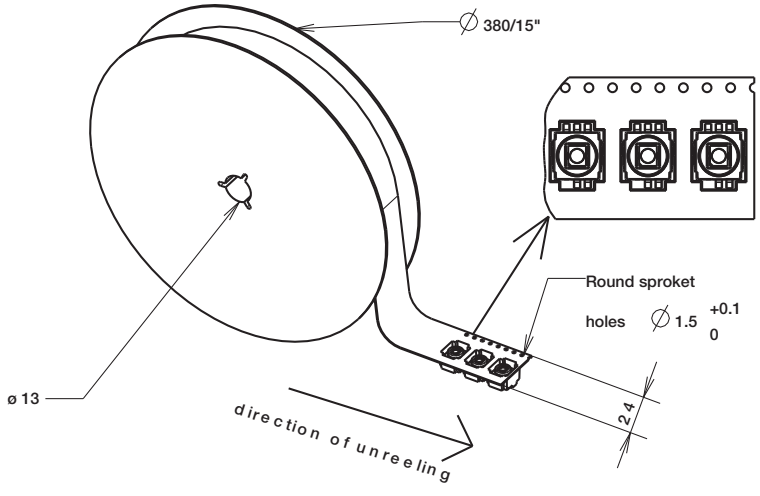
∅ 380/15"
Round sproket
holes ∅ 1.5 +0.1 0
ø 13
direction of unreeling
2.4

K5V
Illuminated Tact Switch

Features

- *Gold plated dome contact SPST/SPDT*
- *Excellent ergonomics*
- *High bright leds*
- *Reduced space usage on board*
- *40 N overload*
- *Tape and reel*
- *RoHS compliant and compatible*

Typical Applications

- *When backlighting and switch are required to be a "2 in 1" component*
- *The dome contact secures a superior contact reliability in time*
- *The ergonomics of K5V provides a long travel, a sharp tactile feel and an audible click*
- *Server, storage, automotive, network infrastructure, medical*

Specification

FUNCTION: momentary action
CONTACT ARRANGEMENT: Normally Open + Normally Closed
TERMINALS:
THT: Through hole terminals with positioning pegs
SMT: Surface mount terminals with positioning pegs
PM: Panel mount solder terminals with wire hole

Mechanical

Version	Operating force FA[1] Newtons (grams)	Operating life (operations)	Travel (total travel) mm(mm)
THT, SMT, PM	4.0 (400)	25,000	1.2 (2.4)

[1] Tolerances of operating force FA is ± 25%.

Packaging

THT:
60 pieces per tray; 1800 pieces per box
SMT:
330 pieces per reel (reel ø 360mm); 1320 pieces per box
PM:
60 pieces per tray; 2100 pieces per box

Electrical

POWER MIN/MAX: 0.02VA / 1.0VA
VOLTAGE MIN/MAX: 20mVdc – 32 Vdc
CURRENT MIN/MAX: 0.1mA – 100mA
CONTACT RESISTANCE: <150m Ω
INSULATION RESISTANCE: >1G Ω initial, >10M Ω after damp heat
BOUNCE TIME: <5ms

Environmental

OPERATING TEMPERATURE: -40˚C to 85˚C
STORAGE TEMPERATURE: -50˚C to 85˚C
RELATIVE HUMIDITY: 90 to 96% according to NF EN 60068-2-30
PROTECTION: dust protection and flux tight
OVERLOAD: 40N min

Process

SMT
Soldering: Compatible with the lead free soldering profile
No washing
THT
Soldering: Compatible with the lead free soldering profile
No washing
PM
Soldering: Low wattage soldering iron (25-50 watts max).
Solder time 3 seconds max. No washing

Materials

LEAD FREE
CONTACTS: Au over Ni
SOLDERING: Au over Ni
HOUSING: Thermoplastic UL94 V0

How To Order

Our easy build-a-switch concept allows you to mix and match options to create the switch you need. To order, select desired option from each category and and place it in the appropriate box.

K 5 V [ ] [ ][ ] 4 3 [ ] [ ][ ]

Actuator
1 without snap-in, clear (THT and PM version only)
2 with snap-ins, clear for light pipe extension (THT and PM version only)
4 without snap-in, light grey (SMT version only)
5 with snap-ins, light grey for light pipe extension (SMT version only)

Actuator color/LED color
BA Translucid/Blue-Amber
GN Translucid/Green
BU Translucid/Blue
RD Translucid/Red
RG Translucid/Red-Green
WH Translucid/White
WL Translucid/White (low luminosity)
YE Translucid/Yellow
YG Translucid/Yellow-Green
CL Transparent/No LED
90 Black Actuator/No LED

Operating Force
4 4.0 N (400 grams)

Contact Material
3 Gold (Au)

Termination
G Surface mount
P Panel mount
T Through-hole 3.5mm
S Through-hole 2.1mm

Option
NONE No option
P3 Terminal 3 is cut
P4 Terminal 4 is cut
P13 Terminal 1 & 3 is cut
P14 Terminal 1 & 4 is cut

Dimensions are shown: mm
Specifications and dimensions subject to change

K5V SMT

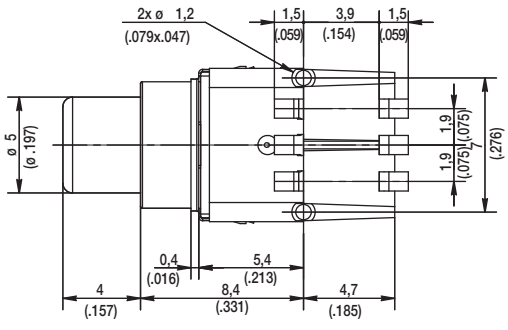

ELECTRICAL DIAGRAM

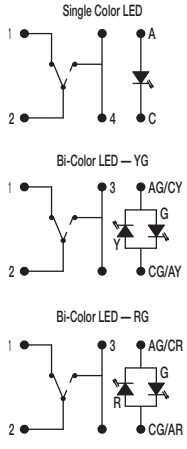

RECOMMENDED PCB LAYOUT (WITH HOLES)

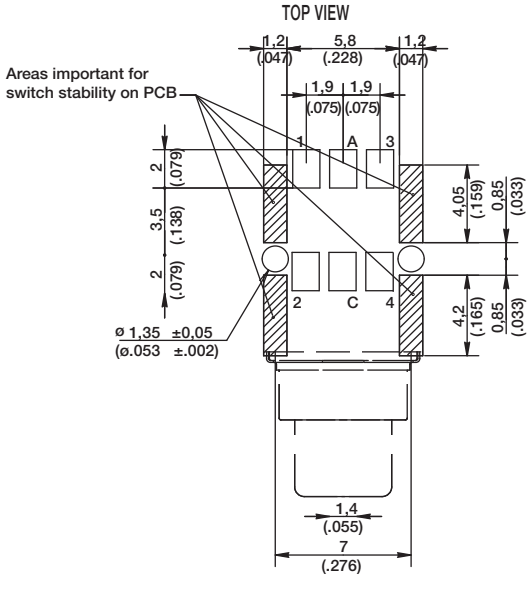

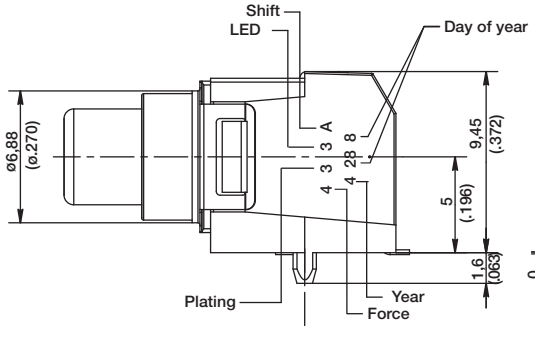

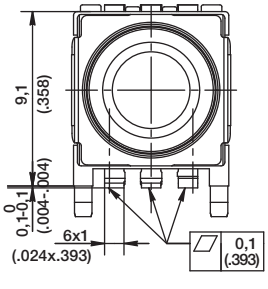

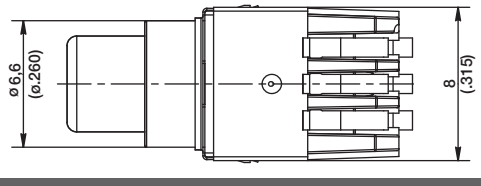

TAPE & REEL

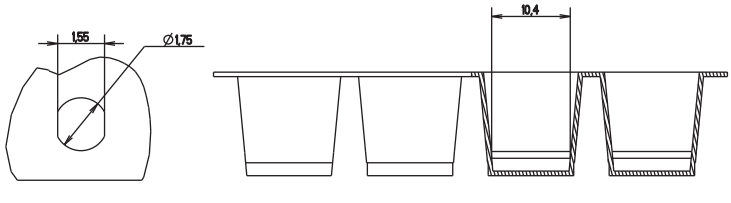

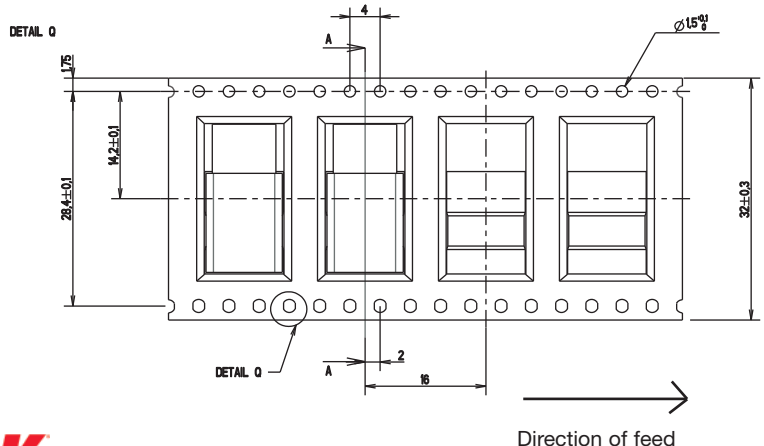

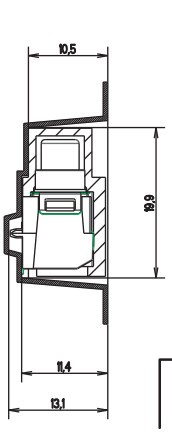

Direction of feed

First Angle Projection

Dimensions are shown: mm
Specifications and dimensions subject to change

K5V
Illuminated Tact Switch

K5V THT

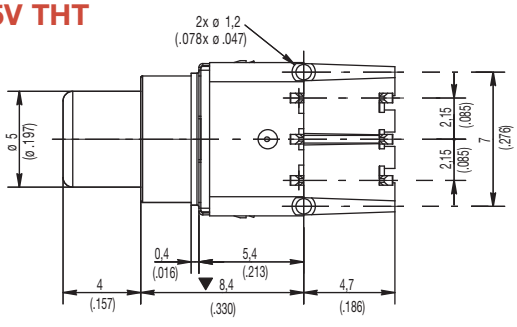

ELECTRICAL DIAGRAM

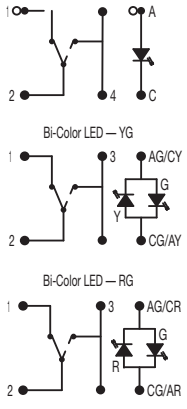

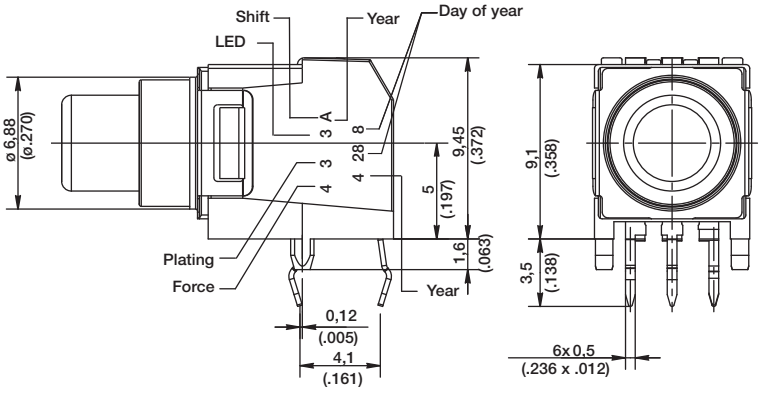

RECOMMENDED PCB LAYOUT (WITH HOLES)

TOP VIEW

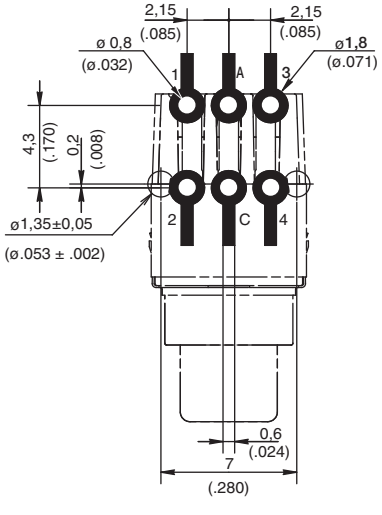

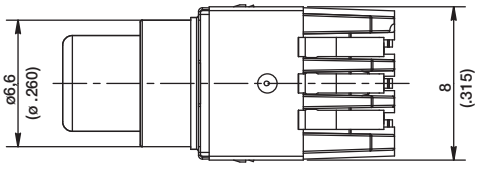

TRAY

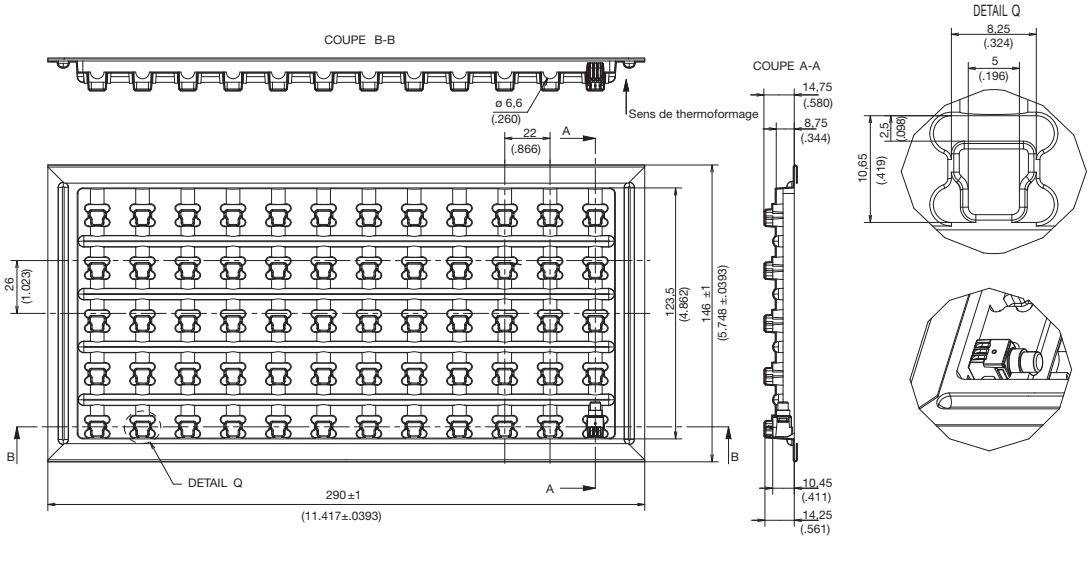

K5V PM

ELECTRICAL DIAGRAM

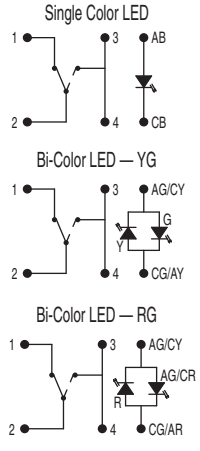

TERMINAL REFERENCES

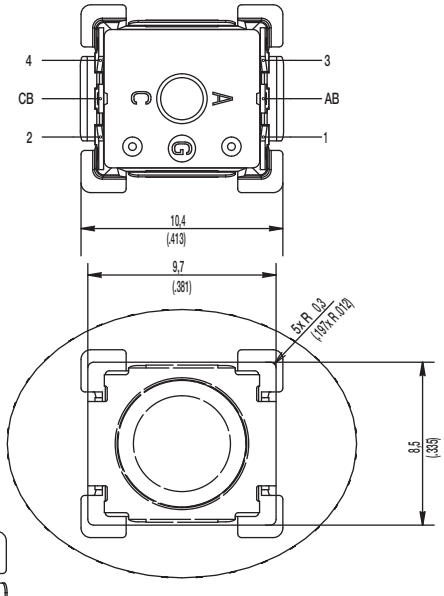

PRODUCT IDENTIFICATION AND DATE CODES

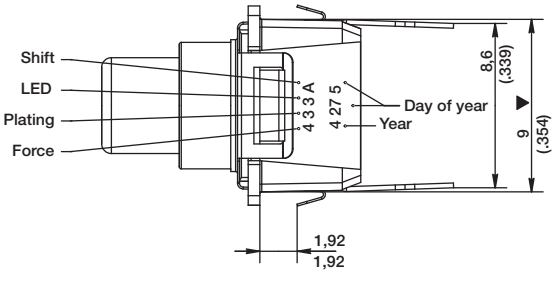

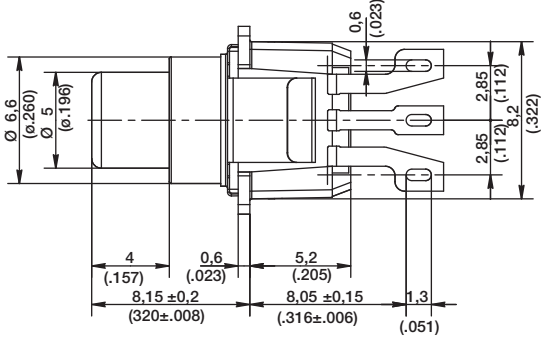

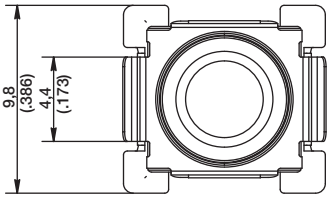

TRAY

SUITABLE FOR PANEL THICKNESS OF 1.8MM MAX

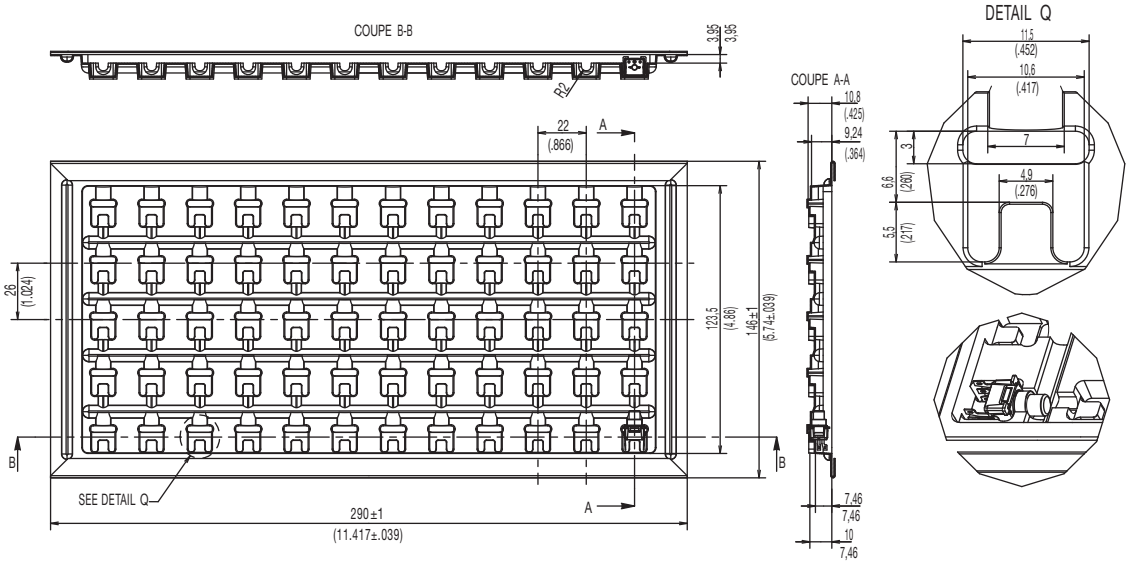

KSF & KSFI Series
Soft Actuated Tact Switch

Features/Benefits

- ***Soft actuated switch***
- ***Sealed front end***
- ***Top and side actuated***

Typical Applications

- ***Low profile keyboards***
- ***Automotive interfaces***
- ***Industrial control***

Specification

FUNCTION: momentary action
CONTACT ARRANGEMENT: 1 make conact = SPST, N.O.
TERMINALS: THT pins

Mechanical

Type	Force (N)	Operating life (operations)	Travel (mm)
KSF0M211LFTR	1.5 ± 0.5	100,000	0.25 ± 0.1
KSF0M311LFTR	1.9 ± 0.5	100,000	0.25 ± 0.1
KSF0M411LFTR	3.0 ± 0.75	100,000	0.25 ± 0.1
KSF0M511LFTR	5.2 ± 1.0	100,000	0.25 ± 0.1
KSFI0V91170SH LFTR	3.4 ± 1.5	100,000	0.65 ± 0.25
KSF0M212 LFT	1.6 ± 0.4	300,000	0.25 ± 0.1
KSFI0M412 70SHLFT	3.2 ± 0.8	100,000	0.75 ± 0.25

Overload resistance: 40N, 1 time
Sealing: IP60 or IP67

NOTE: Other configurations of haptics and terminals are available upon demand. Please also refer to KSF and KSFI Mk2 catalogues pages for other options.

This product is designed and manufactured for general electronic devices. For systems where reliability and safety are required, please contact your sales representative to secure product integration and function to secure usage.

Electrical

	Silver	Gold
MAXIMUM POWER:	1 VA	0.2 VA
MAXIMUM VOLTAGE:	32 VDC	32 VDC
MINIMUM VOLTAGE:	20 mV	20 mV
MAXIMUM CURRENT:	50 mA	10 mA
MINIMUM CURRENT:	1 mA	1 mA

DIELECTRIC STRENGTH (50 Hz, 1 min.): > 250 Vrms
CONTACT RESISTANCE: < 100 m Ω
INSULATION RESISTANCE (100 V, initial stage): > 10^9 Ω
BOUNCE TIME: < 1 ms

Environmental

	Silver	Gold
OPERATING TEMPERATURE:	-40˚C to 85˚C	-40˚C to 125˚C
STORAGE TEMPERATURE:	-55˚C to 85˚C	-40˚C to 125˚C

Process

SOLDERING

Packaging

In boxes of 250 pieces (V type) or 500 pieces (M type).

How To Order

Our easy build-a-switch concept allows you to mix and match options to create the switch you need. To order, select desired option from each category and place it in the appropriate box.

However, please note that all the combinations of these options are not feasible.
For any part number different from those listed above, please consult your local representative.

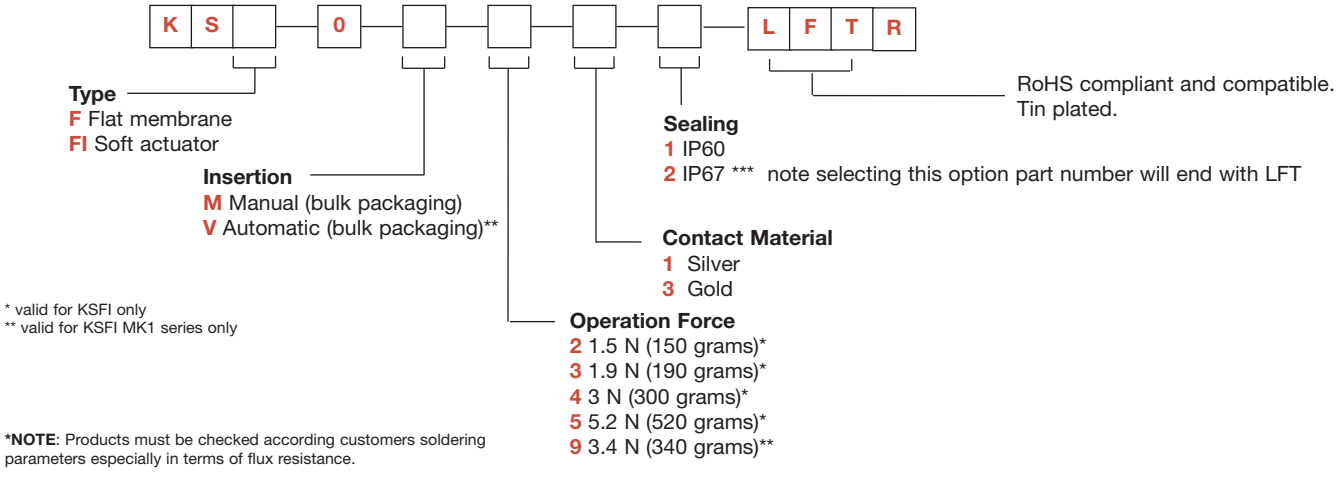

* valid for KSFI only
** valid for KSFI MK1 series only

***NOTE**: Products must be checked according customers soldering parameters especially in terms of flux resistance.

KSF

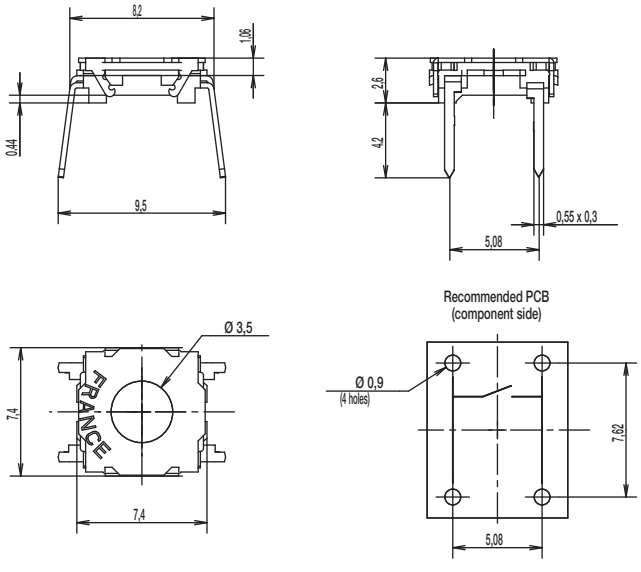

KSFI 0V

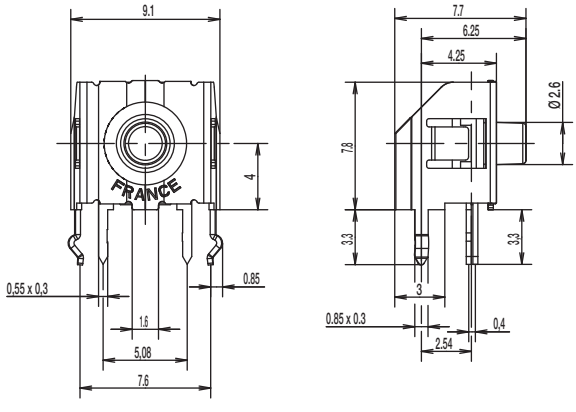

First Angle Projection

Dimensions are shown: mm
Specifications and dimensions subject to change

KSA & KSL Series
Sealed Tact Switch

Features/Benefits

- *Designed for automatic or manual insertion*
- *Cambered terminals to ensure self retention*
- *Top or side actuated*
- *Large choice of caps*
- *RoHS compliant and compatible*

Typical Applications

- *Automotive*
- *Industrial*
- *Telecommunication networks*

Specification

CONTACT ARRANGEMENT: SPST, N.O.
DOUBLE OVERMOLDING ON TERMINAL
SEALING: IP60
TERMINALS: PC pins, ground pin optional

Mechanical

Type	Actuation force N	Operating life (operations)	Travel to make
KSA0M211	1,4 ± 0,4	100,000	0,5 ± 0,2
KSA0M311	1,4 ± 0,4	1,000,000	0,5 ± 0,2
KSA0M411	3 ± 0,75	100,000	0,6 ± 0,2
KSA0M511	5 ± 1,5	100,000	0,7 ± 0,2
KSA0M911	3 ± 0,75	500,000	0,6 ± 0,2
KSL0M211	1,4 ± 0,4	100,000	0,5 ± 0,2
KSL0M311	1,4 ± 0,4	1,000,000	0,5 ± 0,2
KSL0M411	3 ± 0,75	100,000	0,6 ± 0,2
KSL0M511	5 ± 1,5	100,000	0,7 ± 0,2
KSL0M911	3 ± 0,75	500,000	0,6 ± 0,2

NOTE: Other versions in terms of force, termination length and corrosion protection available. Please contact your sales representative.
This data sheet does not provide enough information for applications which require a certain level of quality or safety such as automotive, medical systems, safety equipment. Please contact your sales representative to get contractual specification package.

Electrical

	Silver	Gold
MAXIMUM POWER:	1 VA	0.2 VA
MAXIMUM VOLTAGE:	32 VDC	32 VDC
MINIMUM VOLTAGE:	20 mV	20 mV
MAXIMUM CURRENT:	50 mA	10 mA
MINIMUM CURRENT:	1 mA	1 mA

DIELECTRIC STRENGTH: 250 Vrms
CONTACT RESISTANCE: ≤ 100m Ω
INSULATION RESISTANCE (100 V): ≥ 10^9 Ω
BOUNCE TIME: ≤ 1 ms

Environmental

	Silver	Gold
OPERATING TEMPERATURE:	-40˚C to 85˚C	-40˚C to 125˚C
STORAGE TEMPERATURE:	-40˚C to 85˚C	-55˚C to 125˚C

Process

Wave soldering compatible with lead free soldering profile.

Packaging

Can be delivered in tubes of 65 pieces for automatic insertion or in boxes of 500 pieces for manual insertion (250 pieces for KSL, KSLV, KSAV).

How To Order

Our easy build-a-switch concept allows you to mix and match options to create the switch you need. To order, select desired option from each category and place it in the appropriate box.

However, please note that all the combinations of these options are not feasible.
For any part number different from those listed above, please consult your local representative.

SWITCH K S [ ] [ ] [ ] [ ] [ ] 1 L F T R

Actuator Type
A Short hard plastic
L Long hard plastic

Ground Terminal
0 Without
1 With*

Insertion
M Manual (bulk packaging)
A Automatic (tube packaging)
V Vertical (bulk packaging)*

Contact Material
1 Silver contacts
3 Gold contacts

Operation Force
2 1.3 N (130 grams), 100,000 operations
3 1.3 N (130 grams), 1,000,000 operations
4 3 N (300 grams), 100,000 operations
5 5 N (500 grams), 100,000 operations
9 3 N (300 grams), 500,000 operations

RoHS compliant and compatible. Tin plated.

***Note:** "1" Ground terminal not compatible with "V" insertion

BUTTONS Buttons must be ordered separately and will be supplied in bulk.

B T N K 0 [ ] [ ] [ ]

Button Style
K01 10 mm square snap-on
K02 ø8 mm round snap-on
K03 8,5 x 3,8 mm single floating
K04 18,5 x 3,8 mm double floating
K05 5 mm square
K06 10 x 2,5 mm snap-on handle
K07 5 mm square
K08 9,9 x 5 mm rectangular
K09 ø6,2 mm round

Button Color
10 Dark gray
20 Light gray
30 Yellow
40 Red
50 Green
60 Blue
70 Gray-blue
80 Ivory
90 Black

***NOTE**: Please note that all buttons are not RoHS compliant. Please check the compliance with your C&K sales representative.

Dimensions are shown: mm
Specifications and dimensions subject to change

ACTUATOR TYPE

KSA & KSL

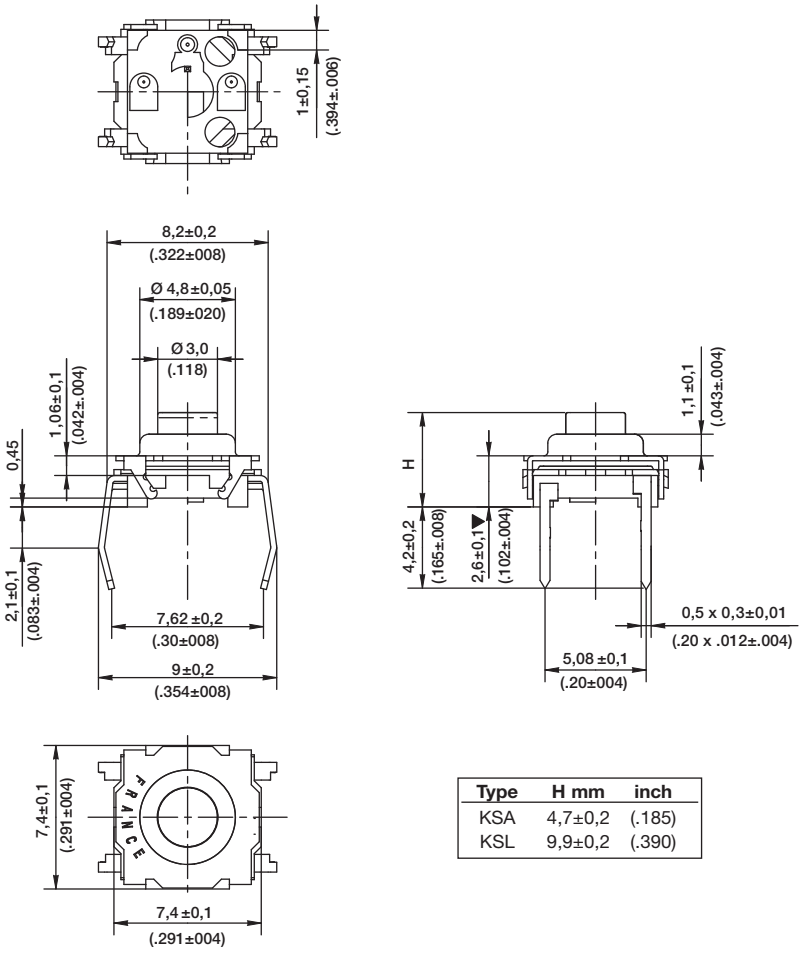

Type	H mm	inch
KSA	4,7±0,2	(.185)
KSL	9,9±0,2	(.390)

GROUND TERMINAL

0 WITHOUT

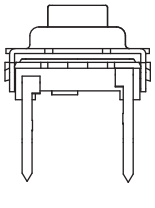

1* WITH

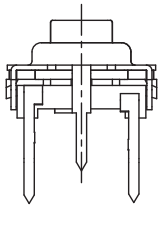

*Not compatible with "V" insertion

First Angle Projection

Dimensions are shown: mm
Specifications and dimensions subject to change

KSA & KSL Series
Sealed Tact Switch

INSERTION

M MANUAL (BULK PACKAGING)

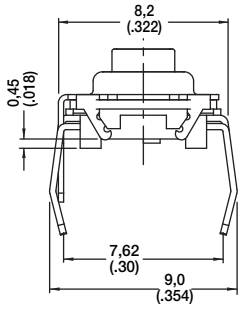

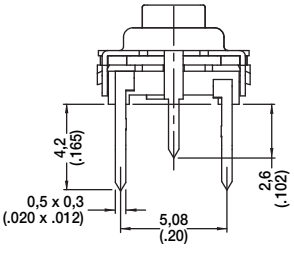

PCB LAYOUT

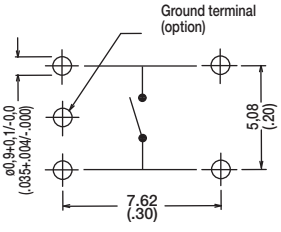

A AUTOMATIC (TUBE PACKAGING, 65 PIECES PER TUBE)

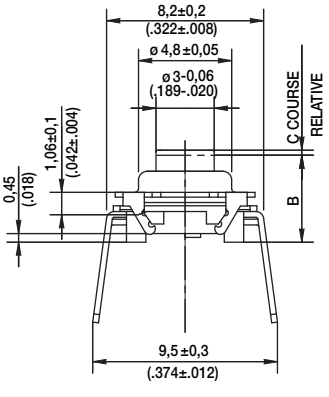

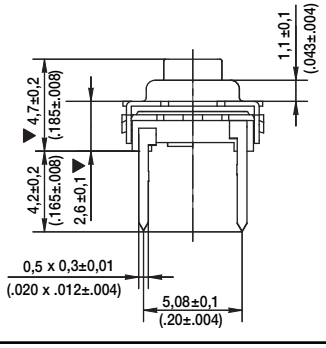

PCB LAYOUT

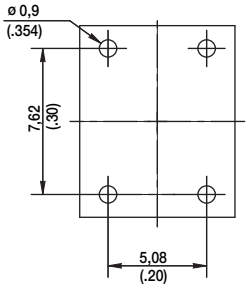

V VERTICAL

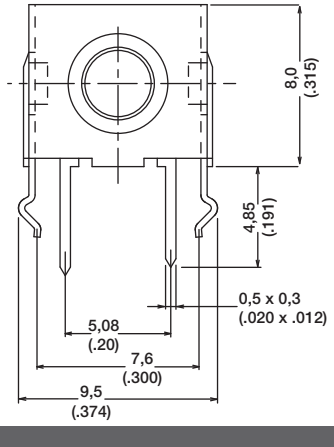

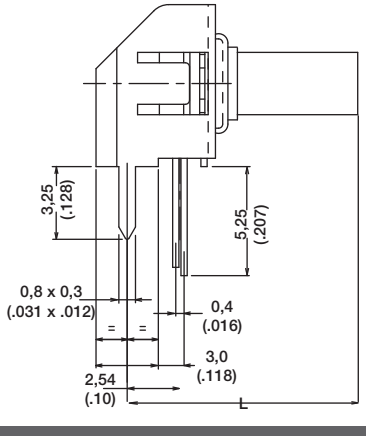

PCB LAYOUT

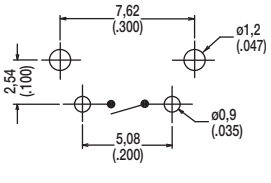

DIMENSION L

Type	L mm	inch
KSA0V	5,8	.228
KSL0V	11,1	.437

OPERATING FORCE

OPTION CODE	OPERATING FORCE
2	1.3 N (130 grams) 100,000 operations
3	1.3 N (130 grams) 1,000,000 operations
4	3.0 N (300 grams) 100,000 operations
5	5.0 N (500 grams) 100,000 operations
9	3.0 N (300 grams) 500,000 operations

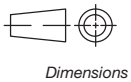
First Angle Projection

Dimensions are shown: mm
Specifications and dimensions subject to change

CONTACT MATERIAL

OPTION CODE	CONTACT MATERIAL
1	Silver contacts
3	Gold contacts

SEALING

OPTION CODE	SEALING
1	Sealing level IP60

BUTTONS

Buttons must be ordered separately and will be supplied in bulk.

BUTTON TYPE	KSA	KSL	KSAV	KSLV
K01	X			
K02	X			
K03	X	X	X	X
K04	X	X	X	X
K05		X		X
K06	X			
K07		X		X
K08		X		X
K09		X		X

K01

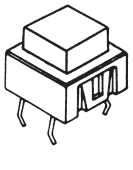

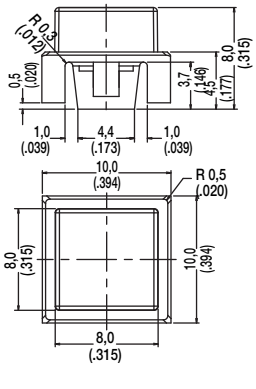

K02

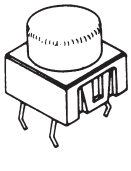

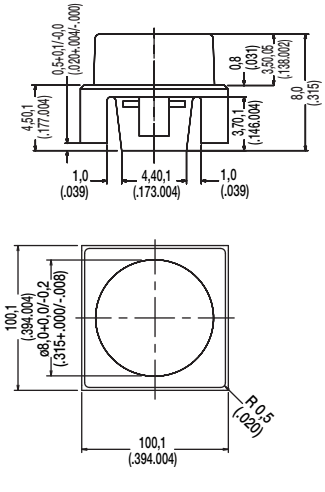

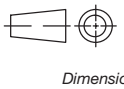
First Angle Projection

Dimensions are shown: mm
Specifications and dimensions subject to change

KSA & KSL Series
Sealed Tact Switch

K03

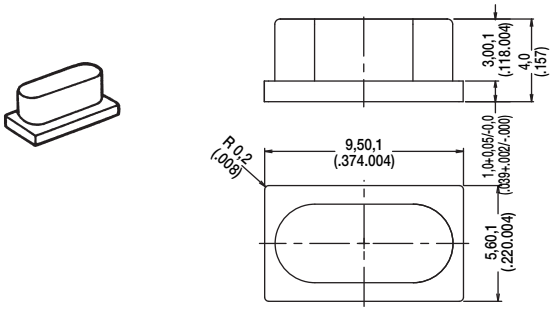

K04

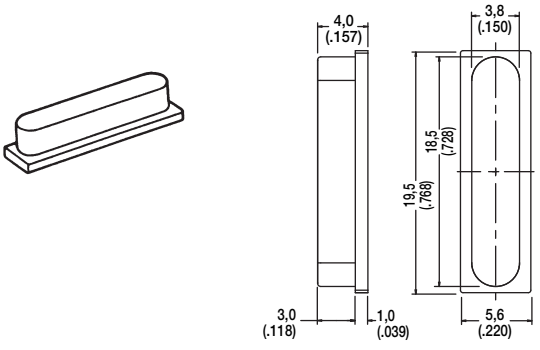

K05

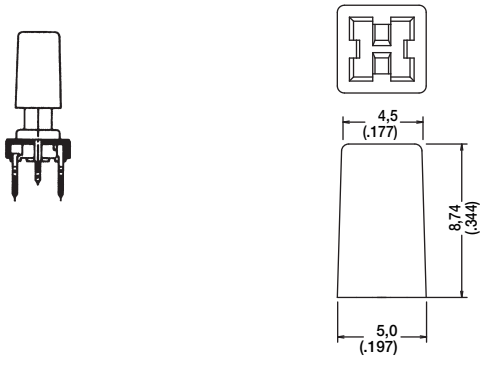

K06

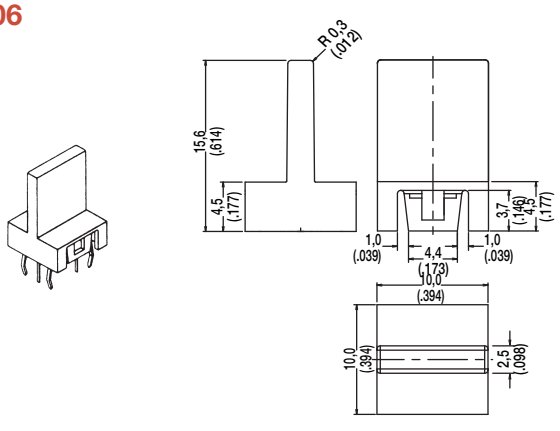

K07

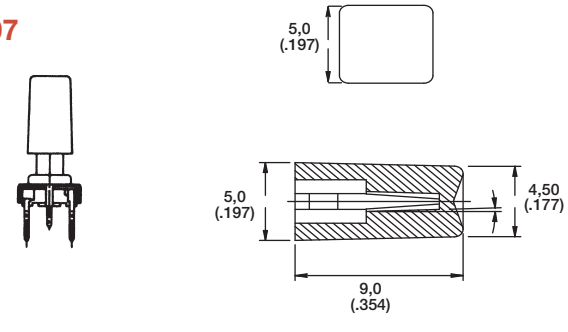

K08

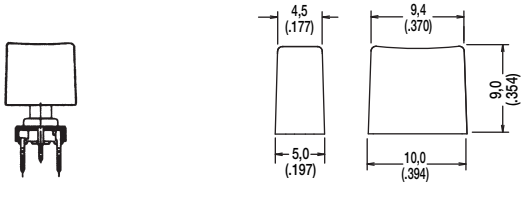

K09

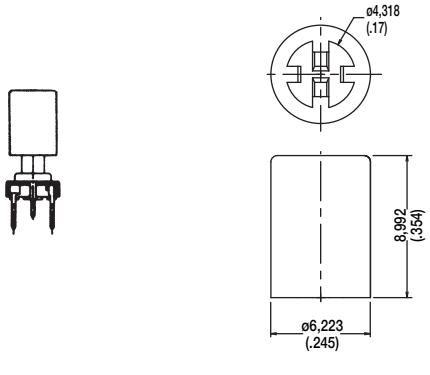

First Angle Projection

Dimensions are shown: mm
Specifications and dimensions subject to change

KSA & KSL MKII Series
High Performance Sealed Tact Switch

Features/Benefits

- ***Highest tact switch sealing performance***
- ***Improved sealing through a modification of the crimping technique and to a double overmolding of the terminal***
- ***Totally sealed***
- ***Up to 1M operations***
- ***RoHS compliant and compatible***

Typical Applications

- ***Automotive***
- ***Industrial***
- ***Telecommunication networks***
- ***Household appliances***
- ***Heating control systems***

Specification

CONTACT ARRANGEMENT: SPST, N.O.
TERMINALS: PC pins
SEALING: IP65
Double overmold on terminals

Mechanical

Type	Actuation force N (grams)	Operating life (operations)	Travel to make
KSA0M212	1,3 ± 0,3	100,000	0,5 ± 0,15
KSA0M312	1,3 ± 0,3	1,000,000	0,5 ± 0,15
KSA0M412	3,25 ± 0,5	100,000	0,6 ± 0,25
KSA0M512	5 ± 1,25	100,000	0,7 ± 0,25

Packaging

Delivered in boxes of 500 pieces (250 pieces for KSL)

NOTE: Specifications listed above are for switches with standard options.
For information on specific and custom switches, consult Customer Service Center.

Other versions in terms of force, termination length and corrosion protection available.
Please contact your sales representative.

This data sheet does not provide enough information for applications which require a certain level of quality or safety such as automotive, medical systems, safety equipment.
Please contact your sales representative to get contractual specification package.

Electrical

	Silver	Gold
MAXIMUM POWER:	1 VA	0.2 VA
MAXIMUM VOLTAGE:	32 VDC	32 VDC
MINIMUM VOLTAGE:	20 mV	20 mV
MAXIMUM CURRENT:	50 mA	10 mA
MINIMUM CURRENT:	1 mA	1 mA

DIELECTRIC STRENGTH: ≥ 250 Vrms
CONTACT RESISTANCE: ≤ 100m Ω
INSULATION RESISTANCE (100 V): ≥ 10^9 Ω
BOUNCE TIME: ≤ 1 ms

Environmental

	Silver	Gold
OPERATING TEMPERATURE:	–40˚C to 85˚C	–40˚C to 125˚C
STORAGE TEMPERATURE:	–40˚C to 85˚C	–55˚C to 125˚C

Process

Wave soldering compatible with lead free soldering profile.

How To Order

Our easy build-a-switch concept allows you to mix and match options to create the switch you need. To order, select desired option from each category and place it in the appropriate box.

However, please note that all the combinations of these options are not feasible.
For any part number different from those listed above, please consult your local represenative.

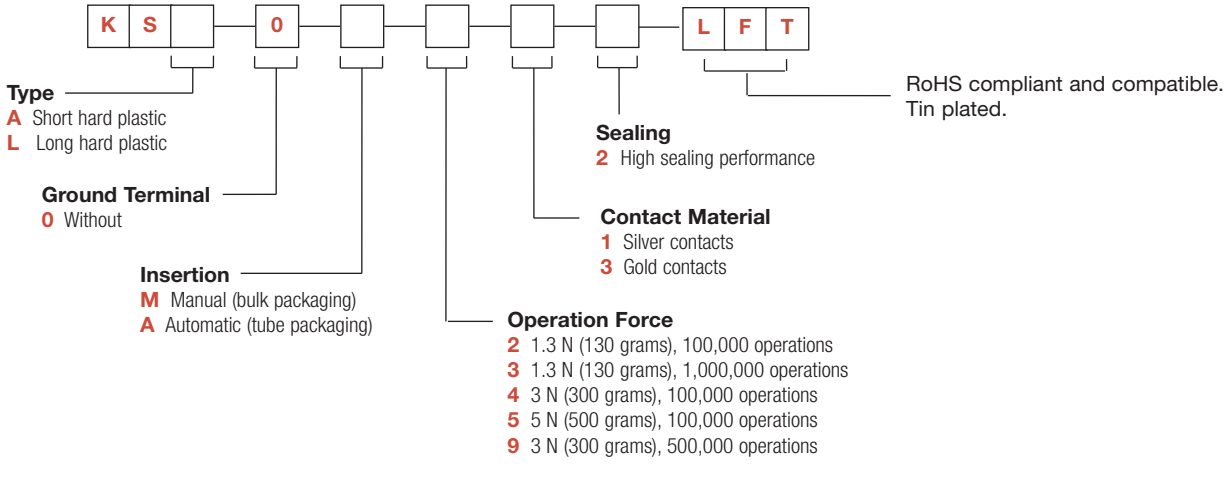

Dimensions are shown: mm
Specifications and dimensions subject to change

KSA & KSL MKII Series
High Performance Sealed Tact Switch

TYPE ☐☐☐ ▪ ▪ ▪ ▪ ▪

KSA & KSL MANUAL INSERTION

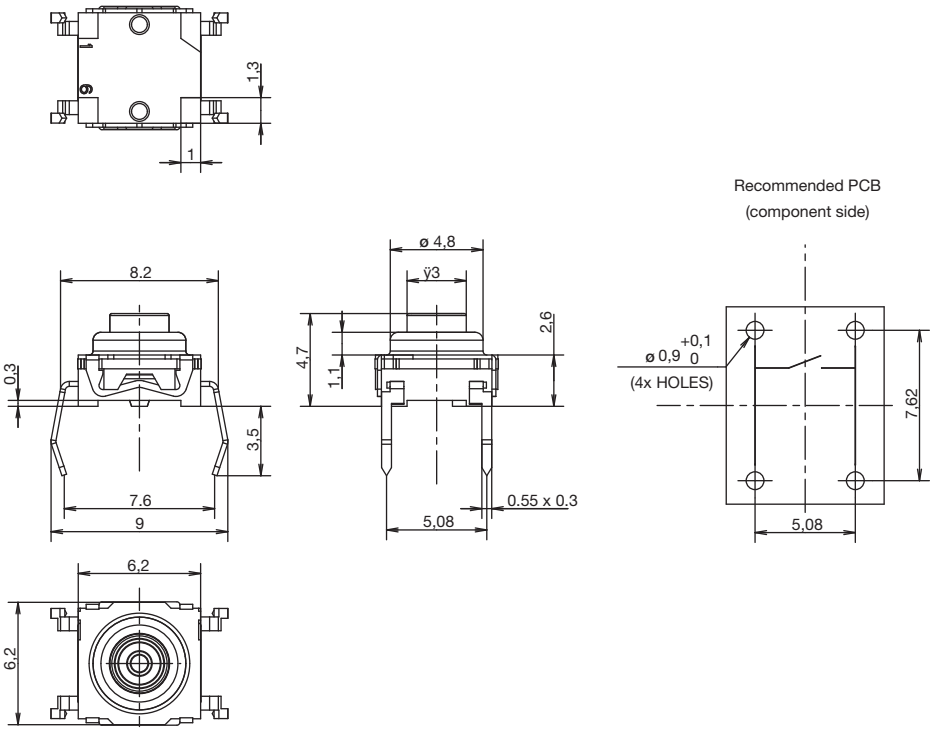

KSA & KSL AUTOMATIC INSERTION

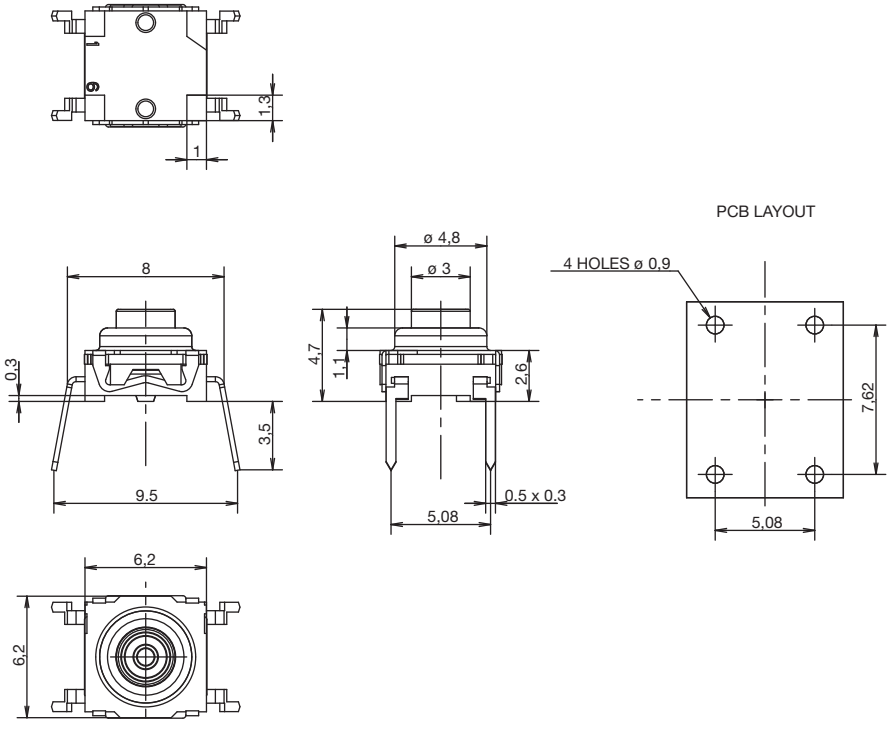

First Angle Projection

Dimensions are shown: mm
Specifications and dimensions subject to change

Features/Benefits

- *Spherical actuator allows actuation force off center ± 30° with regard to vertical*
- *RoHS compliant and compatible*
- *Designed for mechanisms*
- *Compliant side actuation*

Typical Applications

- *Automotive*
- *Cranes, off road, railway*
- *Factory automation*
- *Security systems*

Specification

FUNCTION: Momentary action
CONTACT ARRANGEMENT: 1 make contact = SPST, N.O.
DISTANCE BETWEEN BUTTON CENTERS (min.): 7.62 (0.300)
TERMINALS: PC pins
SEALING: IP60

Mechanical

Type	Actuation force N (grams)	Operating life (operations) axial	Operating life (operations) radial	Travel to make (mm)
KSJ0M21160SH	2 ± 0,5	100,000	30,000	0,6 ± 0,3
KSJ0M41180SH	3,0 ± 0,8	100,000	30,000	0,55 ± 0,25
KSJ0M21180SH	2 ± 0,5	100,000	30,000	0,35 ± 0,2
KSJ0M91180SH	3,9 ± 0,8	100,000	30,000	0,7 ± 0,25

Electrical

	Silver	Gold
MAXIMUM POWER:	1 VA	0.2 VA
MAXIMUM VOLTAGE:	32 VDC	32 VDC
MINIMUM VOLTAGE:	20 mV	20 mV
MAXIMUM CURRENT:	50 mA	10 mA
MINIMUM CURRENT:	1 mA	1 mA

DIELECTRIC STRENGTH (50 Hz, 1 min.): ≥ 250 Vrms
CONTACT RESISTANCE: ≤100m Ω
INSULATION RESISTANCE (100V): ≥ 10^9 ohms
BOUNCE TIME: ≤ 1 ms

Environmental

	Silver	Gold
OPERATING TEMPERATURE:	-40°C to 85°C	-40°C to 125°C
STORAGE TEMPERATURE:	-40°C to 85°C	-55°C to 125°C

Packaging

Delivered in boxes of 250 pieces.

Process

Wave soldering, compatible with lead free soldering profile.

NOTE: Specifications listed above are for switches with standard options.
For information on specific and custom switches, consult Customer Service Center.

This data sheet does not provide enough information for applications which require a certain level of quality or safety such as automotive, medical systems, safety equipment. Please contact your sales representative to get contractual specification package.

* Please contact your C&K represenative for any question regarding the product intergration.

How To Order

Our easy build-a-switch concept allows you to mix and match options to create the switch you need. To order, select desired option from each category and place it in the appropriate box.

However, please note that all the combinations of these options are not feasible.
For any part number different from those listed in the table above, please consult your local represenative.

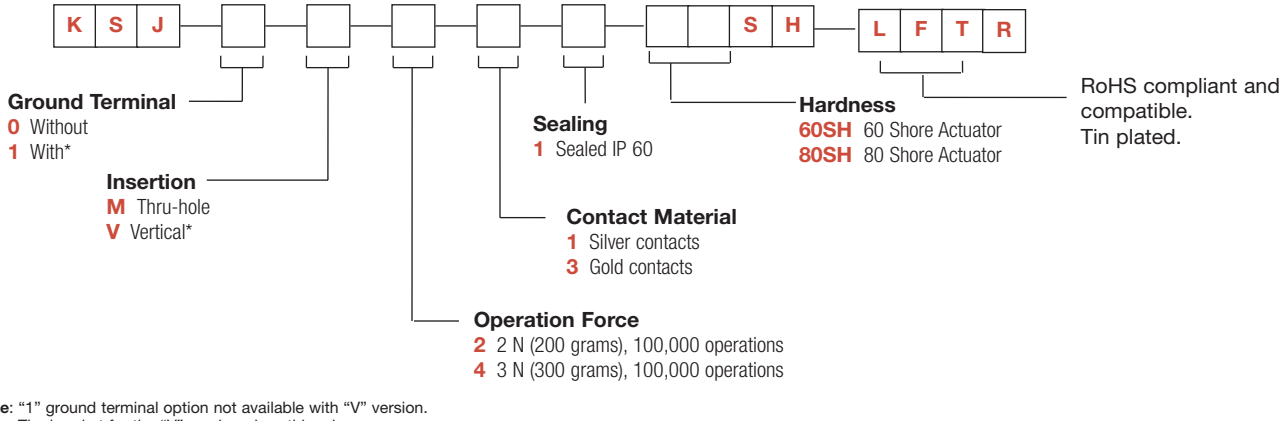

***Note**: "1" ground terminal option not available with "V" version.
The bracket for the "V" version plays this role.

KSJ Series
Spherical Actuator Tact Switches

KSJ

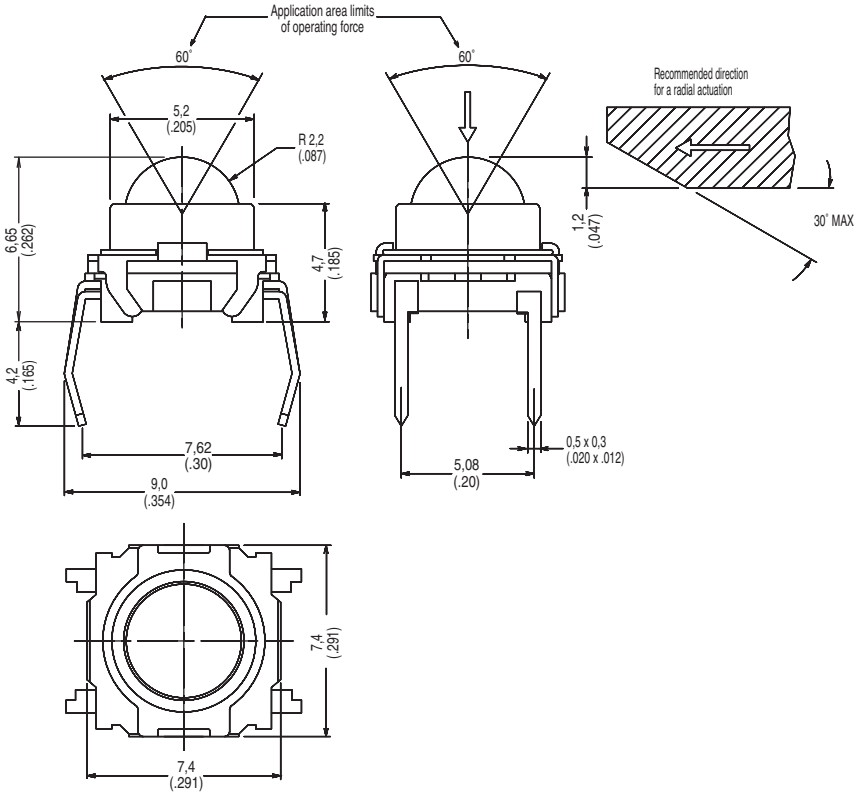

KSJ0M211

INSERTION

M THRU-HOLE

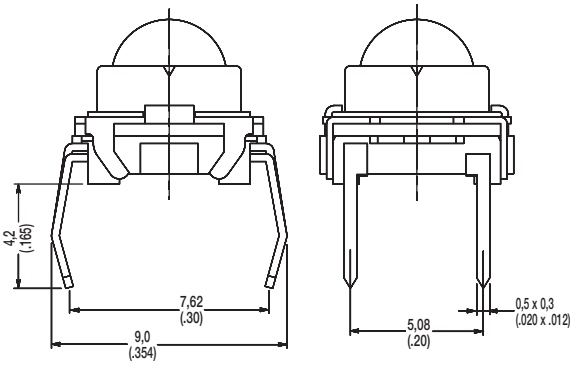

PCB LAYOUT

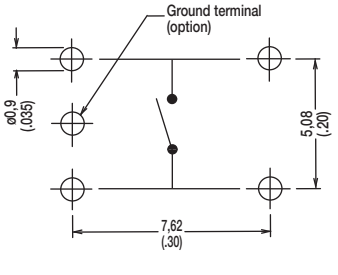

V VERTICAL

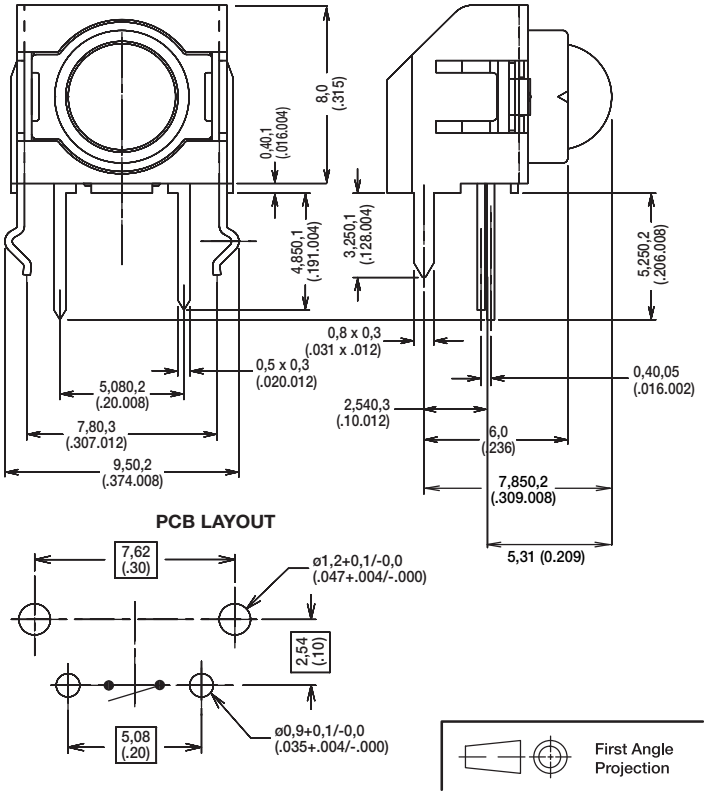

PCB LAYOUT

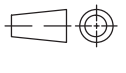

First Angle Projection

Dimensions are shown: mm
Specifications and dimensions subject to change

Features/Benefits

- *Compact size 6 x 3.5 mm*
- *Variety of switch heights*
- *Choice of actuation force*
- *RoHS compliant and compatible*

Typical Applications

- *Consumer products*
- *Instrumentation*
- *Computer products*
- *Industrial*

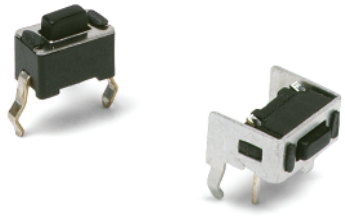

Specification

FUNCTION: Momentary action
CONTACT ARRANGEMENT: SPST, N.O.
TERMINALS: PC pins

Mechanical

ACTUATION FORCE: PTS635L models: 130 grams.
PTS635H models: 200 grams.
LIFE EXPECTANCY: 20,000 operations.

Electrical

CONTACT RATING: 50 mA @ 12 V DC.
DIELECTRIC STRENGTH: 250 V AC min.
CONTACT RESISTANCE: 100 mΩ max. initial.
INSULATION RESISTANCE: 10^{11}Ω min.

Environmental

OPERATING TEMPERATURE: -40˚C to 60˚C

NOTE: Specifications listed above are for switches with standard options.
For information on specific and custom switches, consult Customer Service Center.

Process

SOLDERING: Preheating to 100˚C for 45 sec. max. Keep flux flush with top surface of PCB; do not apply to component side of PCB and area where terminals are located. Soldering to 255˚C for 5 sec. max. Clean by brushing on solder surface. Do not clean switch with solvents.

Materials

BASE: 6/6 nylon or glass filled polyester (PBT) (UL 94V-0).
ACTUATOR: 6/6 nylon or polyacetal (UL 94HB).
COVER PLATE: PTS635S and PTS635V models: Tin plated stainless steel
DOME CONTACTS: Phosphor bronze, silver clad.
STATIONARY CONTACTS: Brass, silver plated.
TERMINALS: Brass, silver plated. Insert molded.

Packaging

Bulk packaging.

Tape & reel for:
PTS635Sx43SMTR, 1700 pcs per reel

How To Order

Our easy build-a-switch concept allows you to mix and match options to create the switch you need. To order, select desired option from each category and place it in the appropriate box.

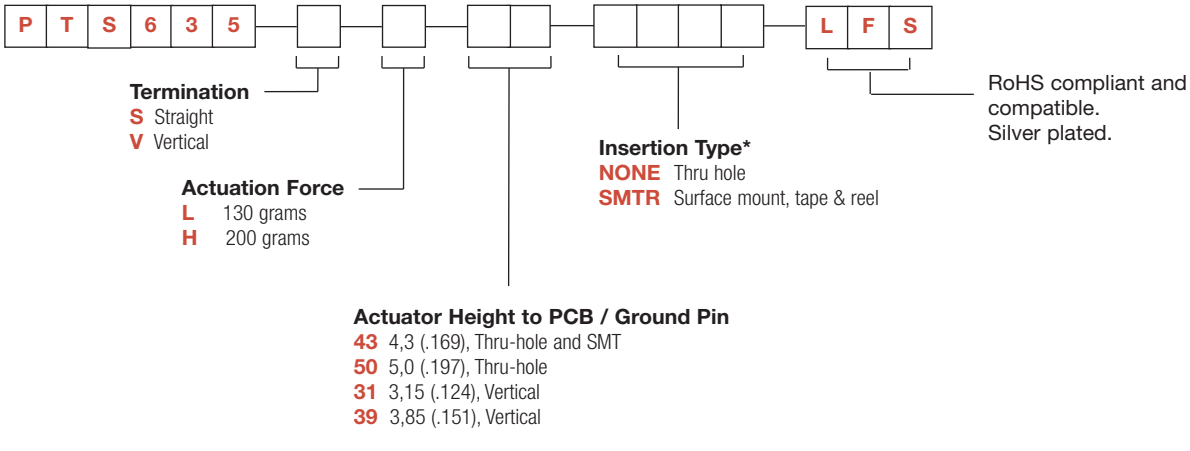

* SMTR only available with PTS635 43 Actuator Height options.

PTS635 Series
3,5 mm Tact Switches

SERIES

PTS635

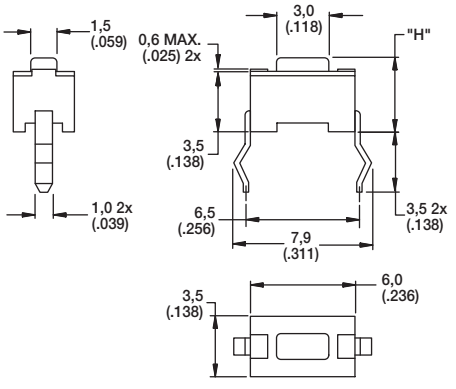

For "H" dimension please refer to chart on next page

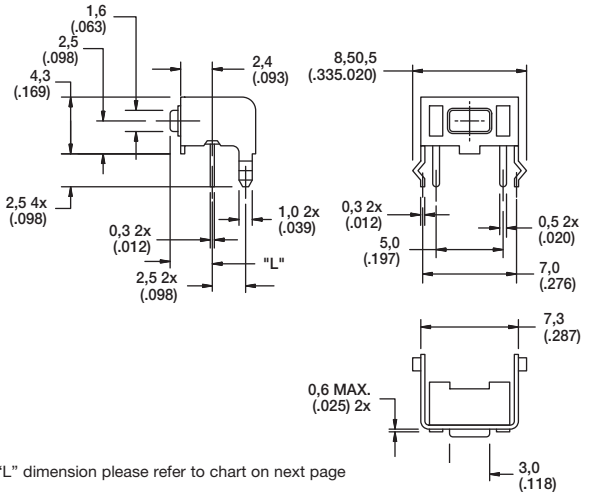

For "L" dimension please refer to chart on next page

TERMINATION

S STRAIGHT

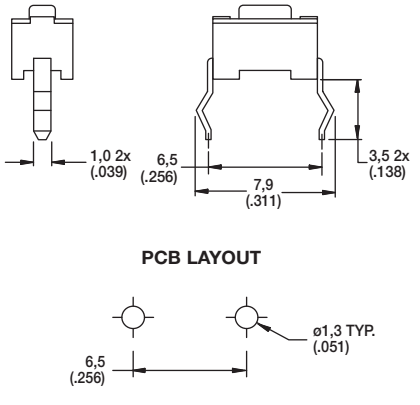

V VERTICAL

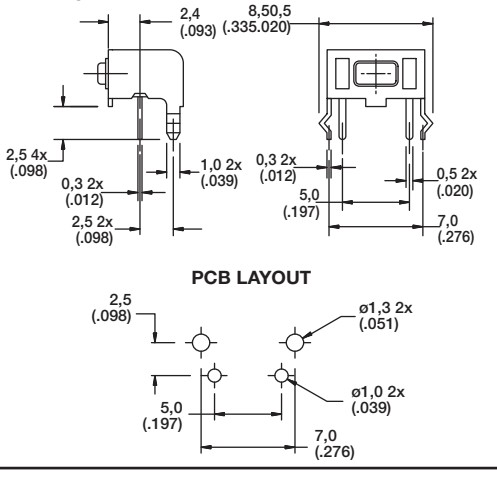

SMT 43

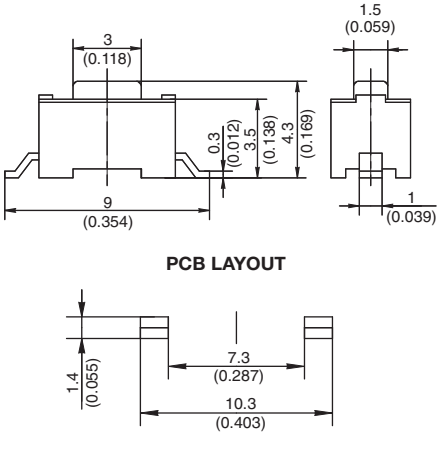

First Angle Projection

Dimensions are shown: mm
Specifications and dimensions subject to change

ACTUATION FORCE

OPTION CODE	FORCE
L	130 grams
H	200 grams

ACTUATOR HEIGHT

OPTION CODE	HEIGHT "H" or LENGTH "L"	TERMINATION	SCHEMATIC
43	4,3 (.169)	Thru-hole & SMT	1 2
50	5,0 (.197)	Thru-hole	
31	3,15 (.124)	Vertical	1 2 3 4
39	3,85 (.151)	Vertical	

INSERTION TYPE

SMTR 43

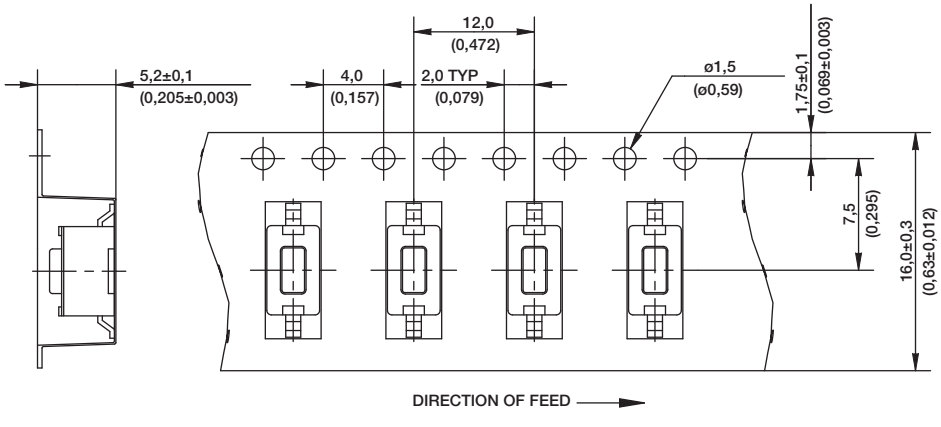

First Angle Projection

Dimensions are shown: mm
Specifications and dimensions subject to change

PTS641 Series
SMT Top Actuated Switches

Features/Benefits

- ***6.3 x 6.3 mm footprint***
- ***Multiple heights***
- ***Ground pin option***

Typical Applications

- ***Metering***
- ***White goods***
- ***Home and garden equipment***

Specification

FUNCTION: Momentary action
CONTACT ARRANGEMENT: 1 make contact = SPST N.O.
TERMINALS: G type for SMT

Mechanical

TRAVEL:
0.20 mm ±0.15 mm for 160 &250 gf
0.30 mm ±0.15 mm for 320 gf
OPERATING LIFE: 100,000 cycles
OPERATION FORCE:
160 gf ±50 gf blue actuator
250 gf ±50 gf red actuator
320 gf ±80 gf black actuator

Packaging

Switches in reels of 1,500 pieces.
Dimensions of reels according to EIA 481B
External diameter 330 mm

Electrical

MAXIMUM VOLTAGE: 12 VDC
MAXIMUM CURRENT DC: 50 mA
DIELECTRIC STRENGTH: 250 VA C (1mn)
CONTACT RESISTANCE: 100 m Ω
INSULATION RESISTANCE: ≥ 100 M Ω
BOUNCE TIME: < 5 ms

Environmental

OPERATING TEMPERATURE: -20˚C to 85˚C

Process

SOLDERING: This component is suited to the following methods:
Infrared Reflow Soldering in accordance with IEC61760-1

NOTE: Specifications listed above are for switches with standard options.
For information on specific and custom switches, consult Customer Service Center.

How To Order

Our easy build-a-switch concept allows you to mix and match options to create the switch you need. To order, select desired option from each category and and place it in the appropriate box.

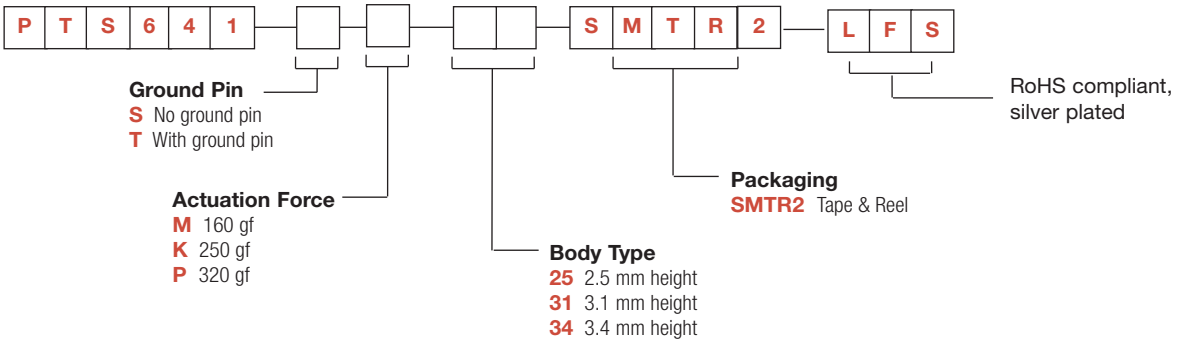

PTS641 Series
SMT Top Actuated Switches

NO GROUND PIN H = 2.5, 3.1, or 3.4 mm

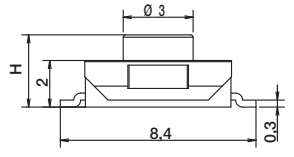

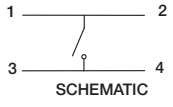

SCHEMATIC

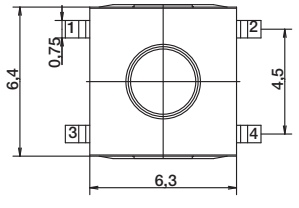

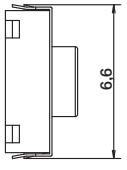

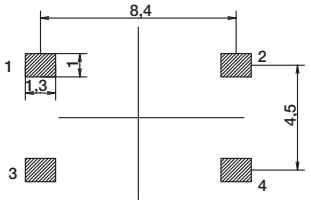

RECOMMENDED PCB LAYOUT

GROUND PIN H = 2.5, 3.1, or 3.4 mm

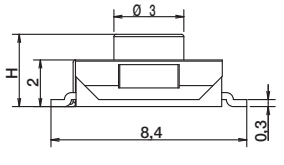

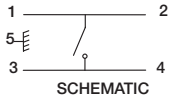

SCHEMATIC

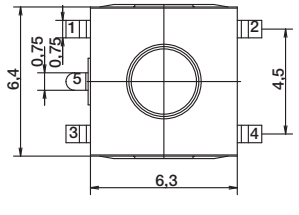

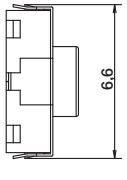

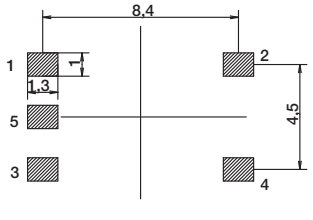

RECOMMENDED PCB LAYOUT

PTS645 Series
6 mm Tact Switches

Features/Benefits

- ***Compact size 6 x 6 mm***
- ***Variety of actuator lengths***
- ***Choice of actuation force***
- ***RoHS compliant and compatible***

Typical Applications

- ***Consumer products***
- ***Instrumentation***
- ***Computer products***
- ***Industrial***

Specification

FUNCTION: Momentary action
CONTACT ARRANGEMENT: SPST, N.O.
TERMINALS: PC pins

Mechanical

ACTUATION FORCE: 130 grams, 160 grams, 200 grams, 260 grams
LIFE EXPECTANCY: 100,000 operations.

Electrical

CONTACT RATING: 50 mA @ 12 V DC.
DIELECTRIC STRENGTH: 250 V AC min.
CONTACT RESISTANCE: 100 mΩ max. initial.
INSULATION RESISTANCE: 10^{11} Ω min.

Environmental

OPERATING TEMPERATURE: -20˚C to 60˚C

Process

SOLDERING: Preheating to 100˚C for 45 sec. max. Keep flux flush with top surface of PCB; do not apply to component side of PCB and area where terminals are located. Soldering to 255˚C for 5 sec. max. Clean by brushing on solder surface. Do not clean switch with solvents.

Packaging

Bulk packaging.

Tape & reel for the SMT type:
Reels of 1,000 pieces for 4,3 and 5,0 mm height
Reels of 700 pieces for 7,0 mm height
Reels of 500 pieces for 9,5 mm height
Reels of 400 pieces for 13,0 mm height

NOTE: Specifications listed above are for switches with standard options.
For information on specific and custom switches, consult Customer Service Center.

How To Order

Our easy build-a-switch concept allows you to mix and match options to create the switch you need. To order, select desired option from each category and and place it in the appropriate box.

P T S 6 4 5 [ ] [ ] [ ] [ ][ ] [ ][ ][ ][ ] L F S

Termination
S Straight
T Straight with ESD pin
V Vertical

Actuator Shape
NONE Round actuator, All versions
J Square actuator, 2.4 mm side
THT versions only (No ESD pin - not available with Termination "T" style

Actuation Force
L 130 grams
M 160 grams
H 200 grams
K 260 grams

Insertion Type
2 Thru hole
SMTR92* Surface mount, tape & reel

RoHS compliant and compatible.
Silver plated.

Switch height from PCB for S and T only
(H dimension see actuator height drawings)
43 4,3 (.169), thru-hole and SMT
50 5,0 (.197), thru-hole and SMT
70 7,0 (.275), thru-hole and SMT
73 7,3 (.287), thru-hole, square actuator 2.4 mm side only
95 9,5 (.374), thru-hole and SMT
13 13,0 (.512) SMT only

Switch length from front leads for V only
(H dimension see actuator height drawings)
31 3,15 (.124), vertical
39 3,85 (.151), vertical
58 5,85 (.230), vertical
61 6,15 (.242), vertical, square actuator 2.4 mm side only
83 8,35 (.329), vertical

*Only the straight type termination without ESD pin is available in SMT type.

Dimensions are shown: mm
Specifications and dimensions subject to change

PTS645 Series
6 mm Tact Switches

TERMINATION

S STRAIGHT

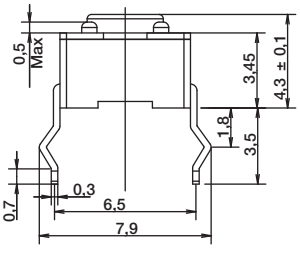

SCHEMATIC

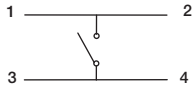

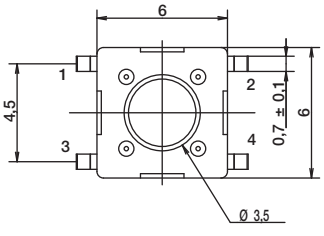

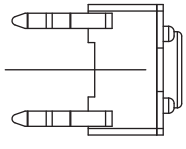

PCB LAYOUT

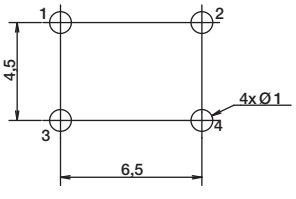

T STRAIGHT WITH ESD PIN

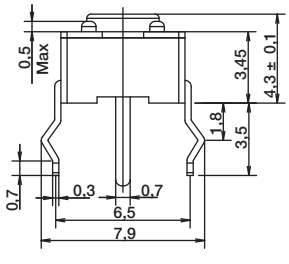

SCHEMATIC

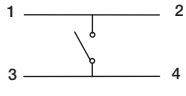

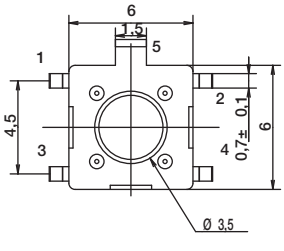

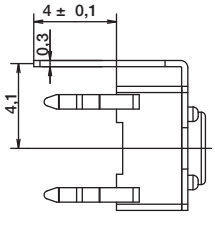

PCB LAYOUT

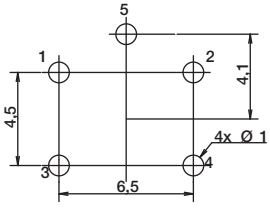

V VERTICAL

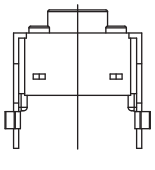

SCHEMATIC

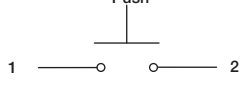

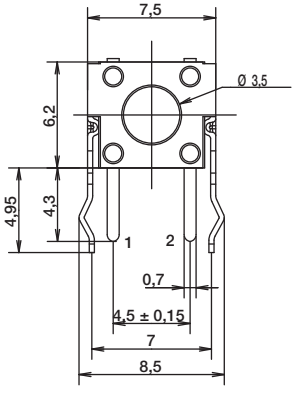

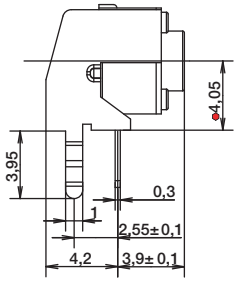

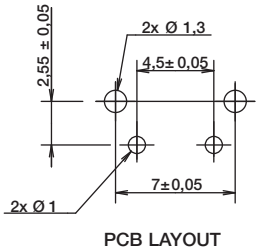

PCB LAYOUT

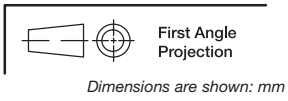

Dimensions are shown: mm
Specifications and dimensions subject to change

PTS645 Series
6 mm Tact Switches

TERMINATION

SMT

FOR 4.3, 5.0, 7.0, 9.5 MM HEIGHT

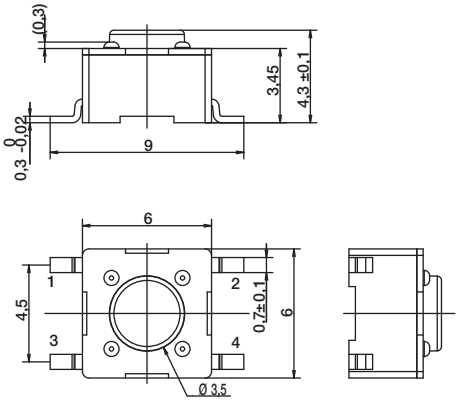

13.0 MM HEIGHT ONLY

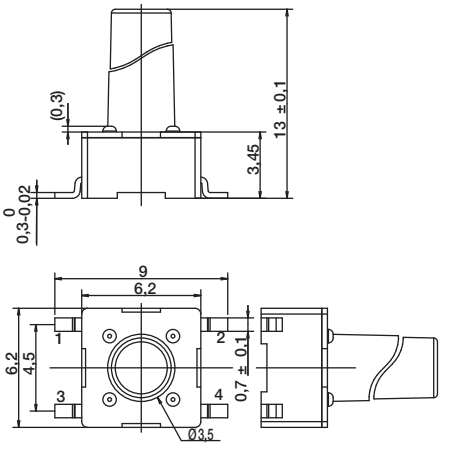

SCHEMATIC

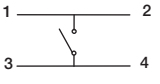

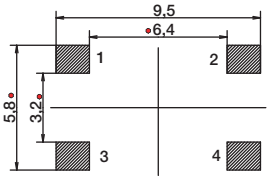

PCB LAYOUT

ACTUATOR SHAPE

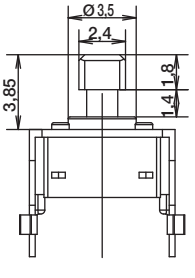

SCHEMATIC

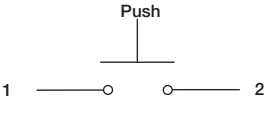

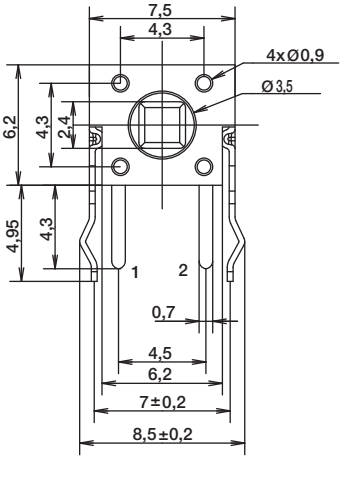

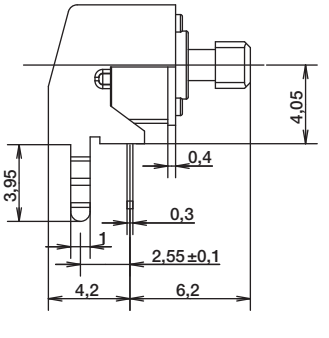

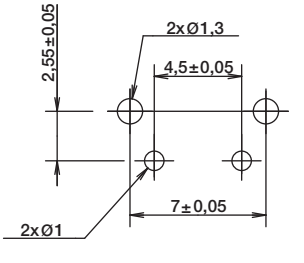

RECOMMENDED PCB LAYOUT

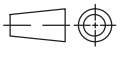

First Angle Projection

Dimensions are shown: mm
Specifications and dimensions subject to change

ACTUATOR SHAPE

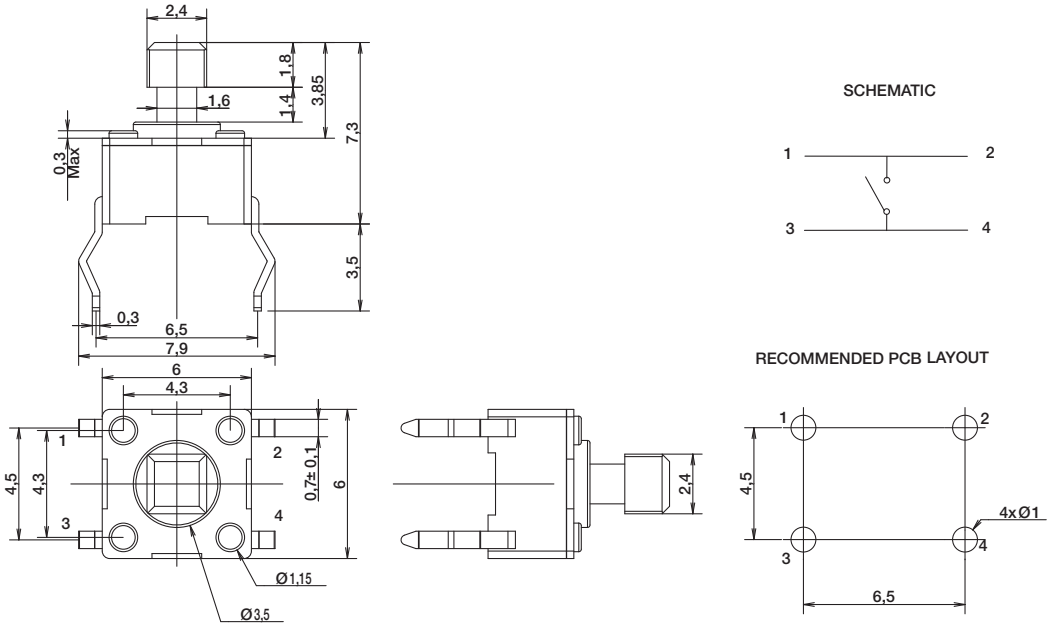

ACTUATION FORCE

OPTION CODE	FORCE
L	130 grams Black
M	160 grams Blue
H	200 grams Gray
K	260 grams Red

ACTUATOR HEIGHT

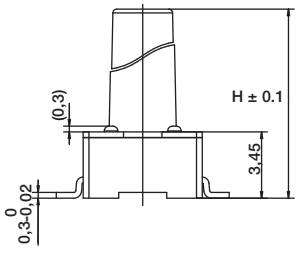

Switch height from PCB for S and T only

OPTION CODE	DIMENSION H	TERMINATION	SCHEMATIC Without EMC pin	SCHEMATIC With EMC pin
43	4,3 (.169)	Thru-hole and SMT		
50	5,0 (.197)	Thru-hole and SMT		
70	7,0 (.275)	Thru-hole and SMT		
95	9,5 (.374)	Thru-hole and SMT		
13	13,0 (.512)	SMT		

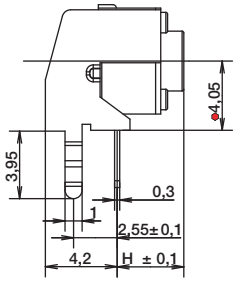

Switch length from front leads for V only

OPTION CODE	DIMENSION H	TERMINATION	SCHEMATIC Without EMC pin	SCHEMATIC With EMC pin
31	3,15 (.124)	Vertical		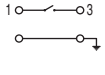
39	3,85 (.151)	Vertical		
58	5,85 (.230)	Vertical		
83	8,35 (.329)	Vertical		

TAPE & REEL

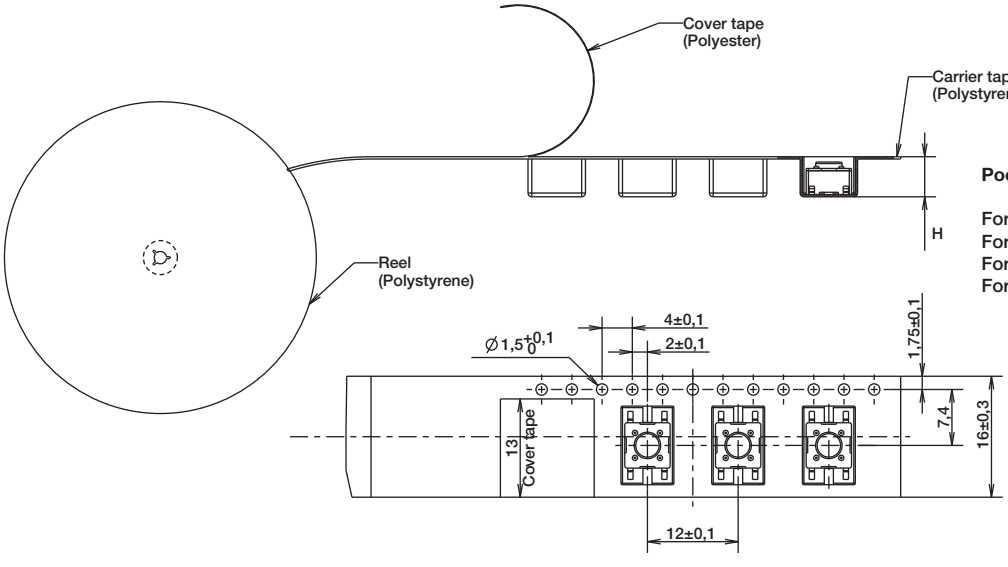

Pocket Height

For 4.3 and 5.0 mm: Height 5.3 mm
For 7.0 mm: Height 7.3 mm
For 9.5 mm: Height 10.3 mm
For 13.0 mm: Height 13.3 mm

PTS645 V SMT Series
6 mm SMT Side Actuated Tact Switch

Features/Benefits

- ***Full SMT processing***
- ***Strong PCB soldering pads***
- ***Compact 6 x 6 mm design***

Typical Applications

- ***Consumer Products***
- ***Set Top and Access Boxes***
- ***Instrumentation***
- ***Home and Garden Equipment***

Specification

FUNCTION: Momentary action
CONTACT ARRANGEMENT: 1 make contact = SPST, N.O.
TERMINALS: G type for SMT
TRAVEL: 0.25 mm +0.2/-0.1 mm
OPERATING LIFE: 100,000 cycles

Mechanical

Part Number	Operating Force (gf)	Actuator Color
PTS645 VN13 SMTR92 LFS	100 ± 30	Dark grey
PTS645 VM13 SMTR92 LFS	160 ± 50	Yellow green

Electrical

MAXIMUM VOLTAGE: 12 V DC
MAXIMUM CURRENT: 50 mA
DIELECTRIC STRENGTH: 100 V AC (1mn)
CONTACT RESISTANCE: ≤ 100 mΩ
INSULATION RESISTANCE: ≥ 100 MΩ
BOUNCE TIME: ≤ 10 ms

Environmental

OPERATING TEMPERATURE: -20˚C to 70˚C
STORAGE TEMPERATURE: -30˚C to 80˚C

Process

SOLDERING: This component is suited to the following methods:
Infrared Reflow Soldering in accordance with IEC61760-1

Recommended solder paste thickness is ≥ 15µm

Packaging

In reels of 650 pieces
Dimensions of reels according to EIA 481B
External diameter 330 mm

NOTE: Specifications listed above are for switches with standard options.
For information on specific and custom switches, consult Customer Service Center.

How To Order

Our easy build-a-switch concept allows you to mix and match options to create the switch you need. To order, select desired option from each category and and place it in the appropriate box.

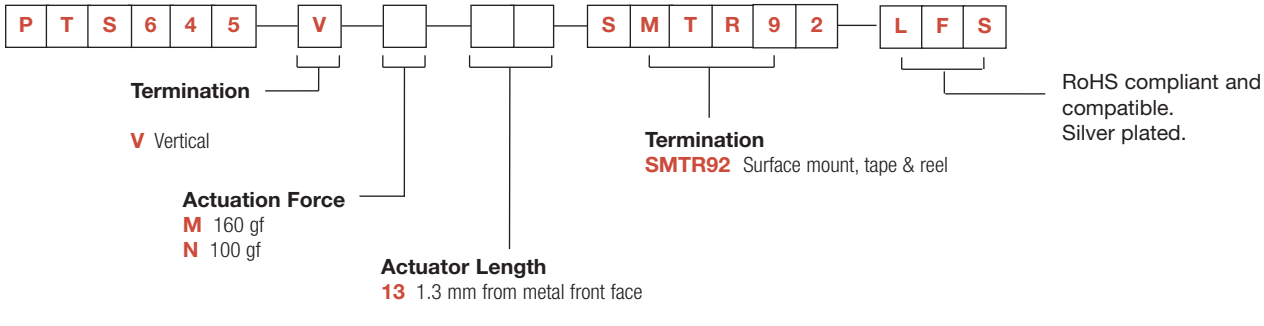

PTS645 V SMT Series
6 mm SMT Side Actuated Tact Switch

RECOMMENDED PCB LAYOUT

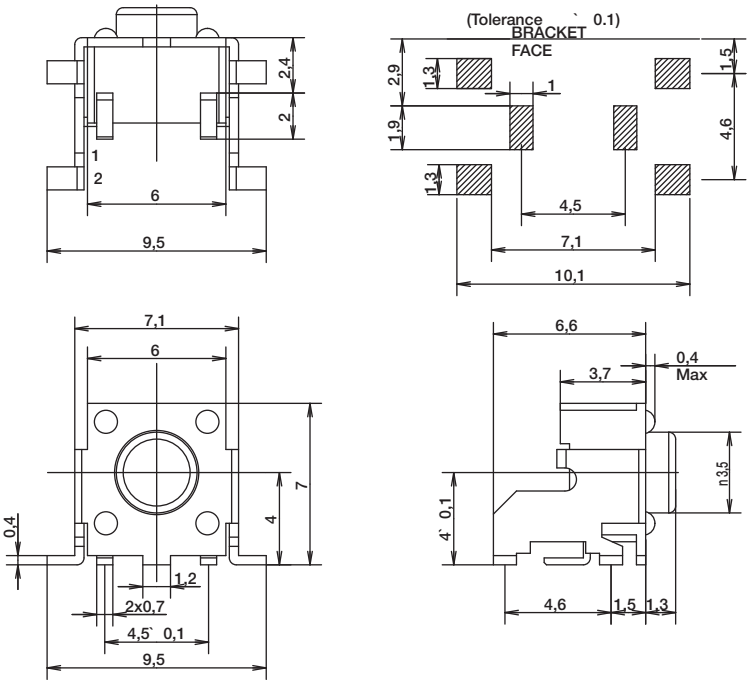

SCHEMATIC

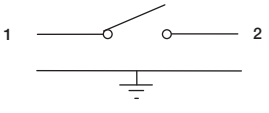

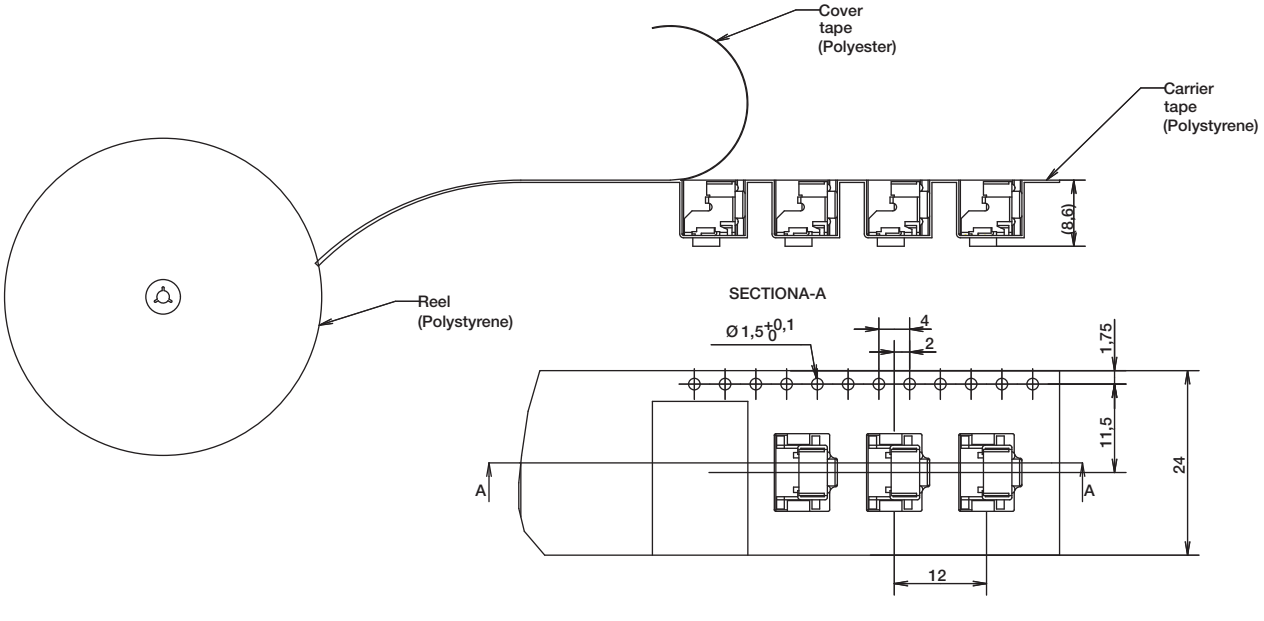

PTS125 Series
12 mm Tact Switches

Features/Benefits

- ***THT and SMT terminations***
- ***Various heights***
- ***Snap fit actuator option***

Typical Applications

- ***Consumer products***
- ***Instrumentation***
- ***Computer products***
- ***Industrial***

Specification

FUNCTION: Momentary action
CONTACT ARRANGEMENT: 1 make contact SPST, N.O.
TERMINALS: PC pins for THT and G type for SMT
TRAVEL: 0.30 mm ± 0.15 mm

Mechanical

OPERATING LIFE: 200,000 cycles
OPERATING FORCE: 180 gf ± 50
250 gf ± 50

Electrical

MAX VOLTAGE: 12 VDC
MAX CURRENT: 50 mA
DIELECTRIC STRENGTH: 250 V AC (1mn)
CONTACT RESISTANCE: <100 mΩ
INSULATION RESISTANCE: >100MΩ
BOUNCE TIME: < 5 ms

NOTE: Specifications listed above are for switches with standard options.
For information on specific and custom switches, consult Customer Service Center.

Environmental

OPERATING TEMPERATURE: -20˚C to 70˚C

Process

SOLDERING: This component is suited to the following methods:
Infrared reflow soldering in accordance with IEC 61760-1 for SMT version
Wave soldering compatible with lead free soldering profile

Packaging

Soldering Style	Height	Packaging	Parts per Packaging
THT	All heights	Plastic bag	500
SMT	4.3 mm	tape & reel	900
SMT	4.3 mm with pegs	tape & reel	600
SMT	7.3 mm	tape & reel	500
SMT	7.3 mm with pegs	tape & reel	500
SMT	8.5 mm	tape & reel	500
SMT	8.5 mm with pegs	tape & reel	400
SMT	12 mm	tape & reel	250

Dimensions of reels according to EIA 481B. External diameter 330 mm.

How To Order

Our easy build-a-switch concept allows you to mix and match options to create the switch you need. To order, select desired option from each category and and place it in the appropriate box.

P T S 1 2 5 — S — [ ] — [ ] — [ ][ ] — [ ] — [ ] — -2 — L F S

Style
S Straight, top actuated

Actuator Shape
NONE Round
J Snap fit 73 height only

Actuator Force
M 180 grams
K 250 grams

Switch Height
43 4.3 mm round actuator
73 7.3 mm sqaure snap fit actuator
85 8.5 mm round actuator
12 12.0 mm round actuator with ribs

Other heights with the round actuator are available upon request. Different minimum order quantities than the stand may apply.

Pegs Option
NONE no pegs
P with pegs - only for SMT version in round and square snap fit actuator (not for 12 switch height)

Termination & Packaging
NONE THT in bags
SMTR SMT in tape & reel

RoHS, silver plated

Dimensions are shown: mm
Specifications and dimensions subject to change

PTS125 Series
12 mm Tact Switches

THT VERSION WITH ROUND ACTUATOR H= 4.3 & 8.5 MM (other height upon request)

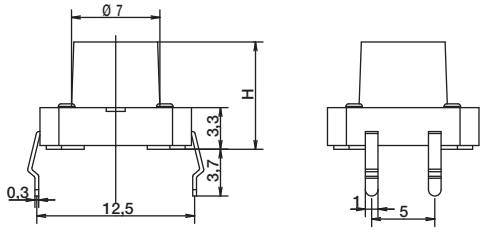

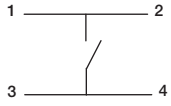

SCHEMATIC

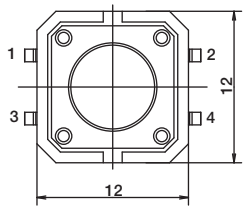

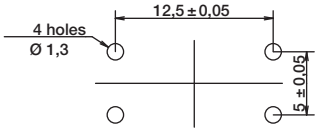

RECOMMENDED PCB LAYOUT

SMT VERSION WITH ROUND ACTUATOR AND PEGS H= 4.3 & 8.5 MM (other height upon request)

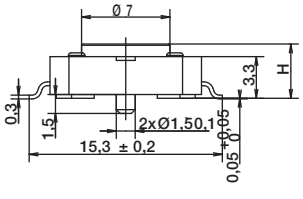

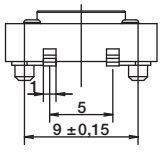

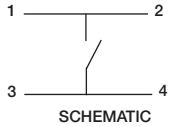

SCHEMATIC

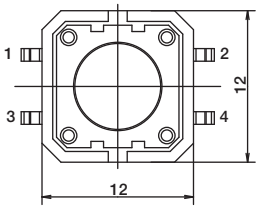

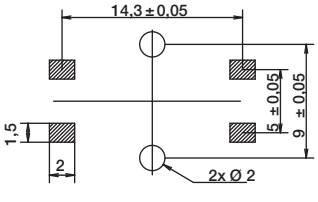

RECOMMENDED PCB LAYOUT

First Angle Projection

Dimensions are shown: mm
Specifications and dimensions subject to change

THT VERSION WITH SQUARE SNAP FIT ACTUATOR H= 7.3 MM

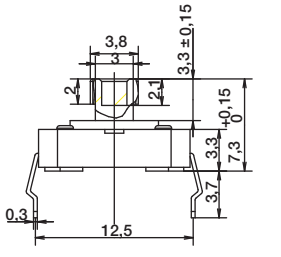

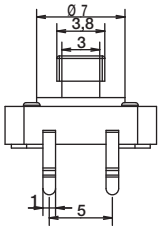

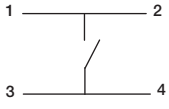

SCHEMATIC

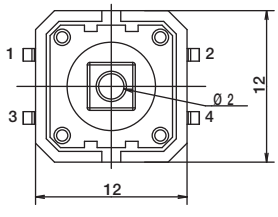

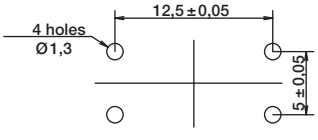

RECOMMENDED PCB LAYOUT

SMT VERSION WITH SQUARE SNAP FIT ACTUATOR AND PEGS H= 7.3 MM

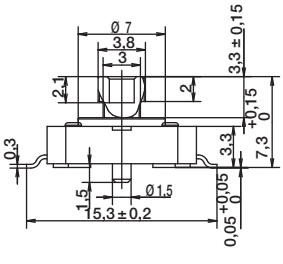

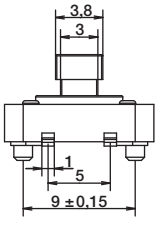

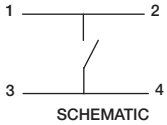

SCHEMATIC

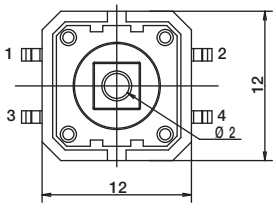

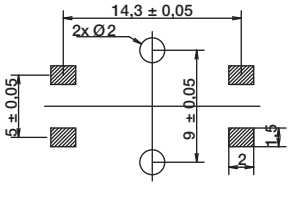

RECOMMENDED PCB LAYOUT

First Angle Projection

Dimensions are shown: mm
Specifications and dimensions subject to change

PTS125 Series
12 mm Tact Switches

THT VERSION WITH ROUND RIBBED ACTUATOR H= 12.0 MM

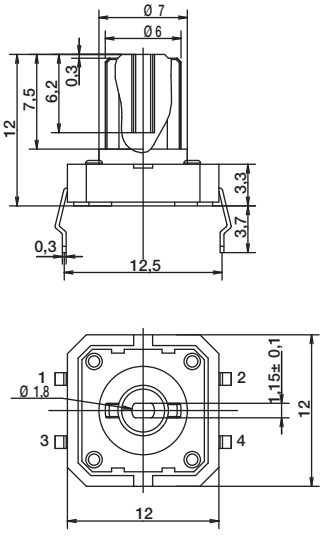

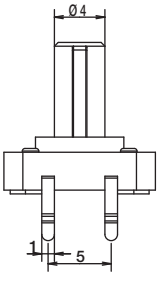

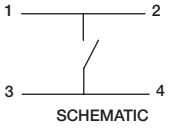

SCHEMATIC

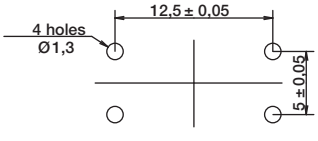

RECOMMENDED PCB LAYOUT

SMT VERSION WITH ROUND RIBBED ACTUATOR H= 12.0 MM

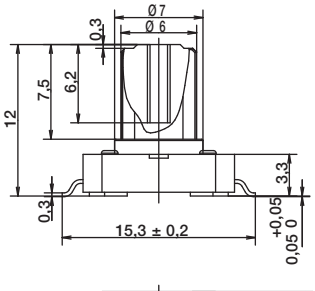

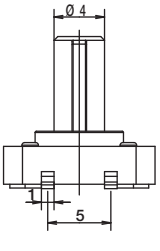

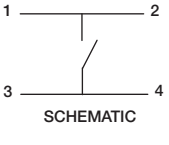

SCHEMATIC

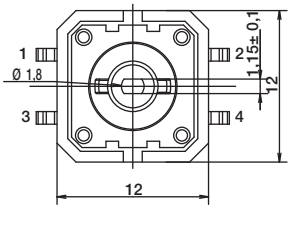

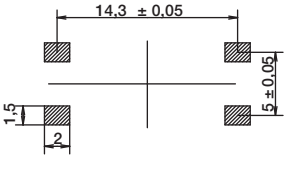

RECOMMENDED PCB LAYOUT

First Angle Projection

Dimensions are shown: mm
Specifications and dimensions subject to change

Features/Benefits

- *Vertical and right angle SMT models*
- *Vertical and right angle thru-hole models*
- *Multiple caps and legends*
- *Several LED colors and bi-color options*
- *RoHS compliant /compatible*

Typical Applications

- *Consumer electronics*
- *Server/storage*
- *Medical devices*
- *Test/Measurement/Instrumentation*
- *Audio/Video*
- *Computers/Peripherals*
- *Security*

NEW Right Angle SMT

Specification

FUNCTION: N.O. momentary action
TERMINALS: SMT & Thru-hole

Mechanical

OPERATING FORCE: 160 ± 50gf for V1; V2; V3; R1; R2 models
220 ± 50 gf for R3 model
OPERATING LIFE: 50,000 cycles (250m Ω max)
RECOMMENDED OPERATING STROKE: 0.25mm ± 0.1mm

Electrical

RATING: 50mA @ 12VDC
CONTACT RESISTANCE: <100m Ω (initial)
DIELECTRIC WITHSTANDING VOLTAGE:
>250VAC (50-60 Hz) between terminals - 1 min.Ω
INSULATION RESISTANCE: >100M Ω
BOUNCE TIME: <10ms

Packaging

Thru-hole: 200 pieces per tray
SMT: tape & reel (see V2 or V3 mounting style drawings)

Environmental

OPERATING TEMPERATURE: -25˚C to +70˚C
STORAGE TEMPERATURE: -25˚C to +80˚C

Process

SOLDERABILITY: Thru-hole - wave compatible
SMT - convection or IR reflow compatible

Materials

CONTACTS/TERMINALS:	Base metal; brass Plating; Ag
DOME:	Base metal: Phosphor bronze Plating; Ag

BASE: PA
ACTUATOR: PA
COVER: PA

Caps

Caps are ordered separately and shipped bulk. Thru-hole versions available with caps assembled under custom part number. Contact customer service for details.

How To Order

Our easy build-a-switch concept allows you to mix and match options to create the switch you need. To order, select desired option from each category and place it in the appropriate box.

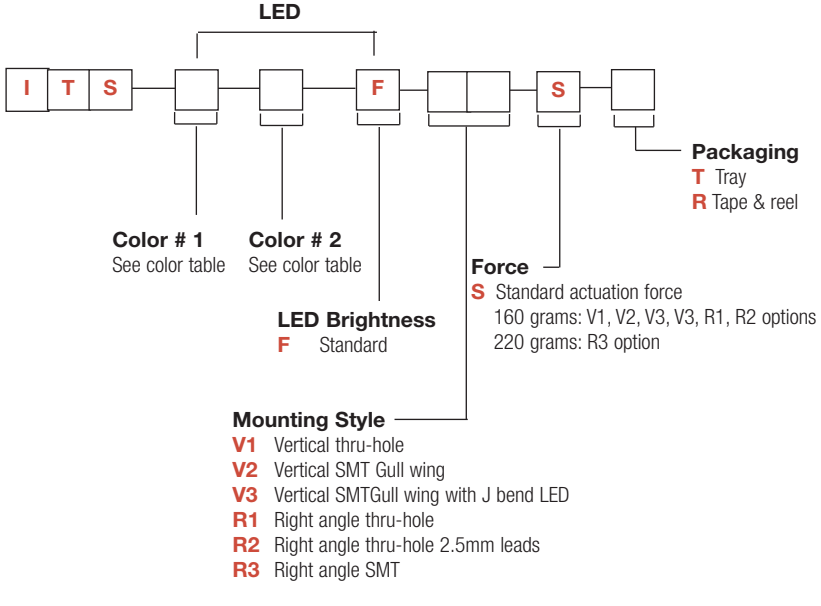

LED Color

00	No light
10	Red
12	Red/Yellow
13	Red/Green
14	Red/Blue
20	Yellow
21	Yellow/Red
23	Yellow/Green
30	Green
31	Green/Red
32	Green/Yellow
40	Blue
41	Blue/Red
50	White
60	True green

* Other colors available by request

Dimensions are shown: mm
Specifications and dimensions subject to change

ITS Series
Illuminated Tact Switch

LED COLOR / BRIGHTNESS

LED Characteristic	units	Standard LED Color Options					
		Red (1)	Yellow (2)	Green (3)	Blue (4)	White (5)	True Green (6)
Recommended Operating	mA @ 5VDC	20mA	20mA	20mA	20mA	20mA	20mA
Forward Current	mA	30 mA	30 mA	30 mA	30 mA	30 mA	30 mA
Peak Pulsing Current (1/8 duty @ 1kHz)	mA	125 mA	125 mA	125 mA	125 mA	125 mA	125 mA
Power Dissipation	mW	75 mW	75 mW	75 mW	108 mW	108 mW	108 mW
Forward Voltage @ 20mA	Volts	2.5 Volts Max.	2.5 Volts Max.	2.5 Volts Max.	3.6 Volts Max.	3.6 Volts Max.	3.6 Volts Max.
Dominant Wavelength @ 20mA	nm	637nm (Typical)	590nm (Typical)	570nm (Typical)	465nm (Typical)	CIE Coordinates X= 0.25 ˜ 0.33 Y= 0.24 ˜ 0.34	522nm (Typical)
Wavelength at Peak Emission @ 20mA	nm	645nm (Typical)	590nm (Typical)	573nm (Typical)	460nm (Typical)		515nm (Typical)
Spectral Half Bandwidth @ 20mA	nm	20nm (Typical)	20nm (Typical)	17nm (Typical)	25nm (Typical)		33nm (Typical)
Luminous Intensity @ 20mA	mcd	50mcd Minimum	125mcd Minimum	40mcd Minimum	100mcd Minimum	250mcd Minimum	500mcd Minimum
Viewing Angle at 50% LV (@10mA)	degrees	150˚ Typical	120˚ Typical	120˚ Typical	120˚ Typical	150˚ Typical	120˚ Typical

MOUNTING STYLES

V1 - Vertical Thru-hole

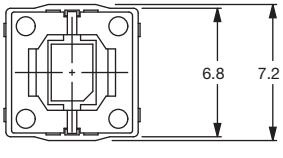

ELECTRICAL SCHEMATIC

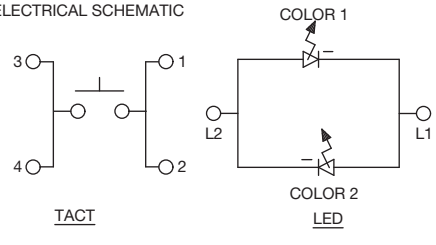

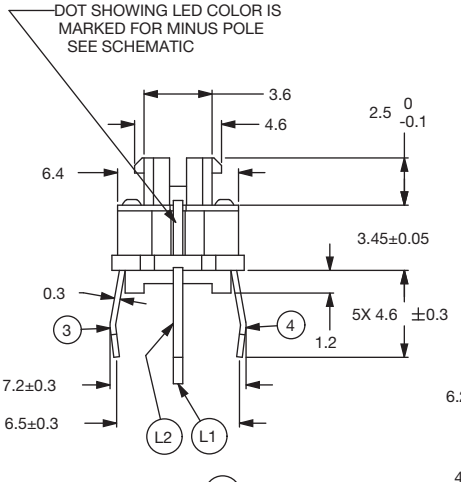

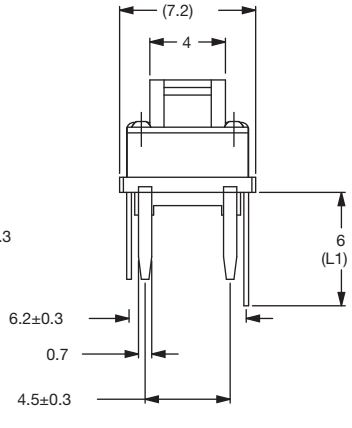

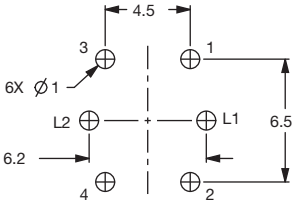

P.C.B. LAYOUT

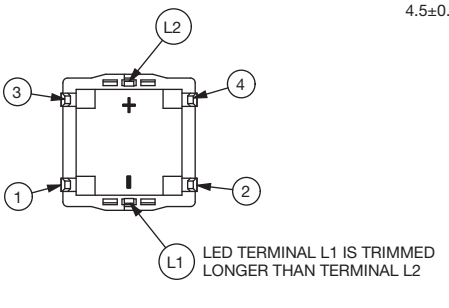

TRAY PACKAGING: 200 PIECES

Dimensions are shown: mm
Specifications and dimensions subject to change

MOUNTING STYLES

V2 - Vertical SMT; Gullwing

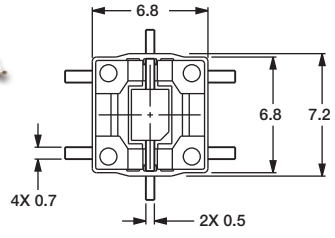

ELECTRICAL SCHEMATIC

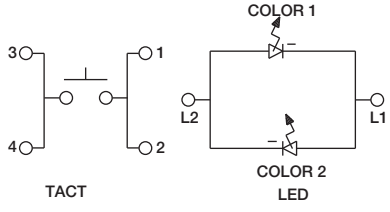

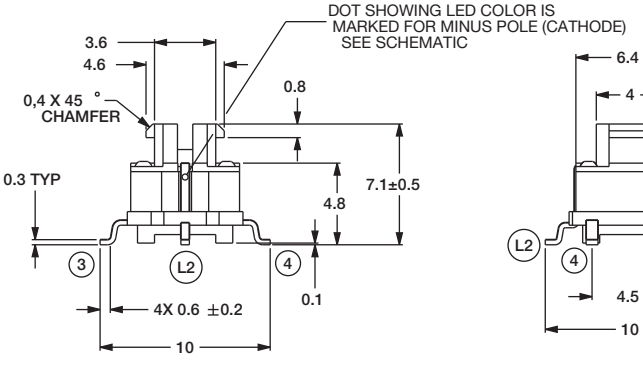

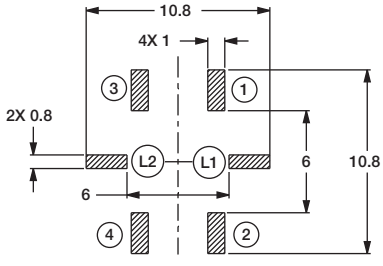

P.C.B .LAYOUT

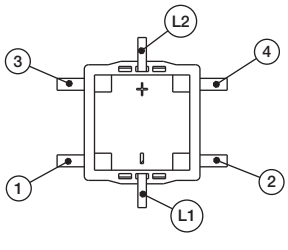

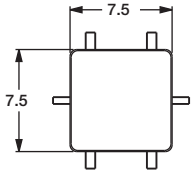

TAPE & REEL: 500 PIECES

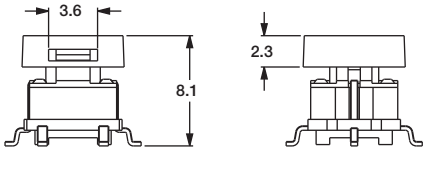

NOTES:
1. SWITCH WITH TEMPORARY PICK AND PLACE CAP.

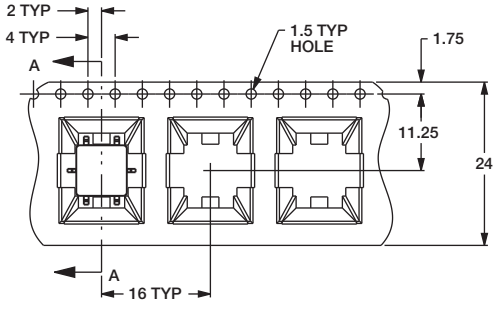

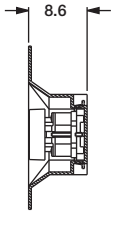

SECTION A-A

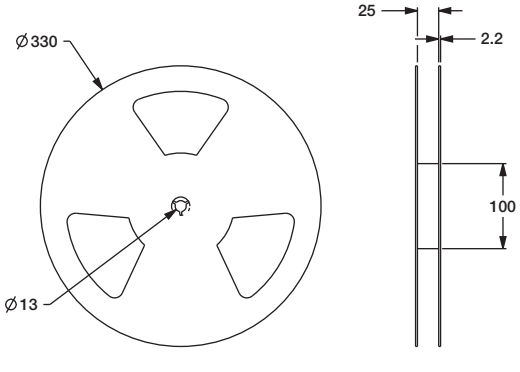

MOUNTING STYLES

V3 - Vertical SMT; Gull wing with J bend LED

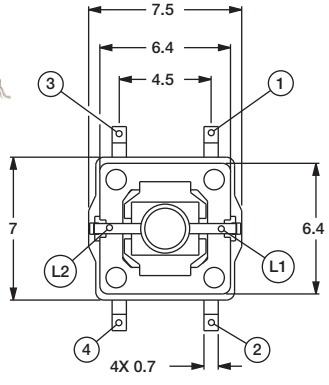

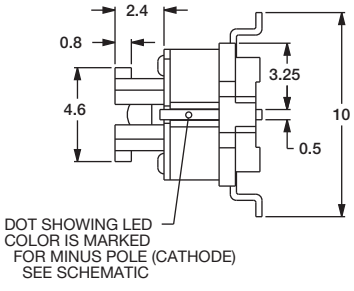

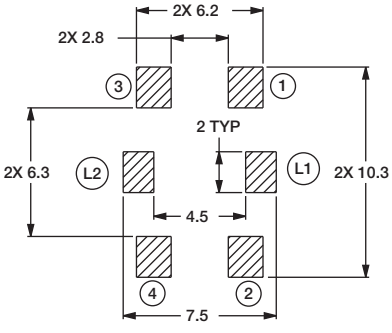

P.C.B. LAYOUT

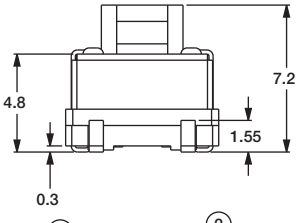

ELECTRICAL SCHEMATIC

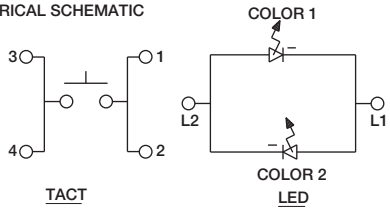

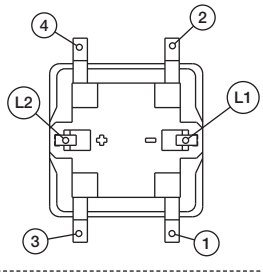

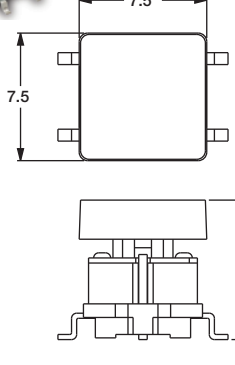

SCALE 3:1

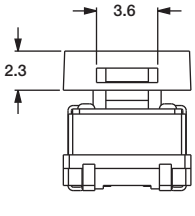

TAPE & REEL: 500 PIECES

NOTES:
1. SWITCH WITH TEMPORARY PICK AND PLACE CAP.

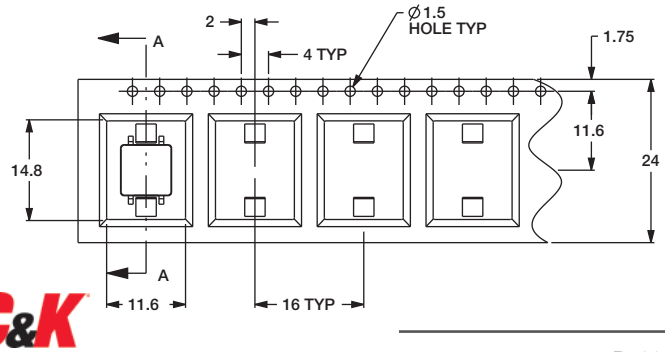

SECTION A-A

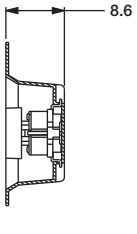

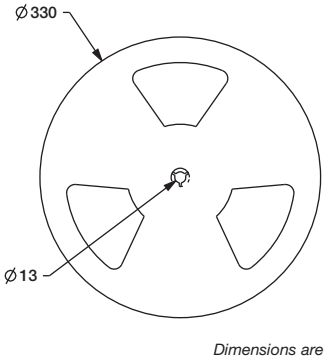

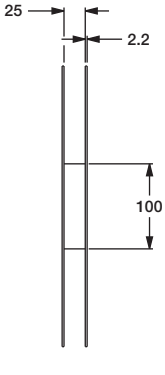

Dimensions are shown: mm
Specifications and dimensions subject to change

MOUNTING STYLES

R1 - Right Angle; Thru-hole

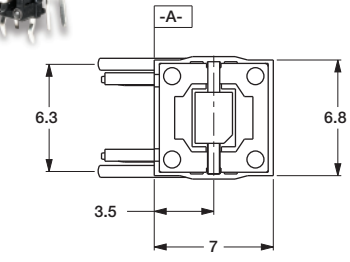

ELECTRICAL SCHEMATIC

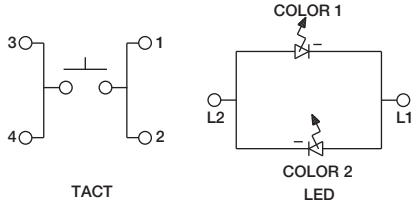

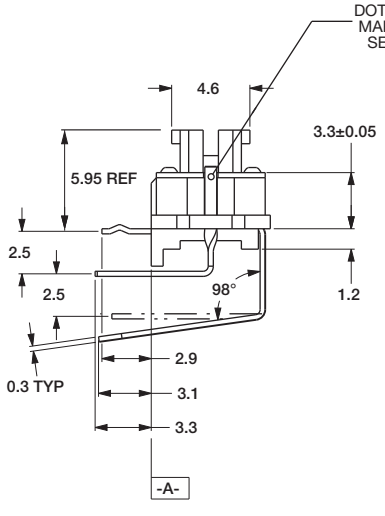

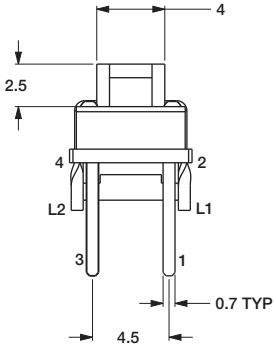

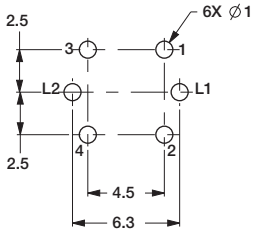

P.C.B. LAYOUT

TRAY PACKAGING: 200 PIECES

R2 - Right Angle; Thru-hole 2.5mm leads

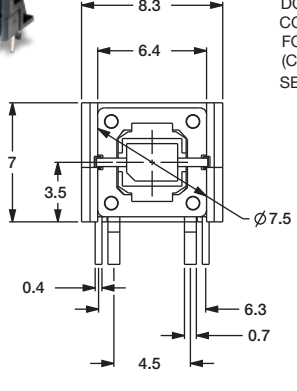

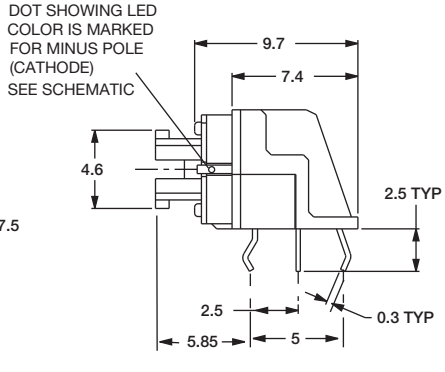

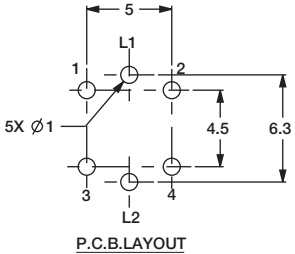

P.C.B.LAYOUT

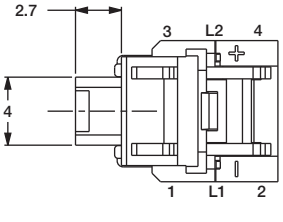

ELECTRICAL SCHEMATIC

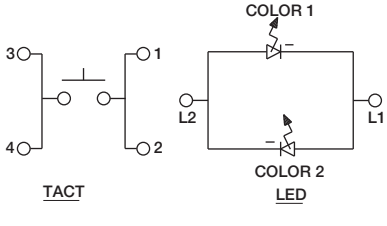

TRAY PACKAGING: 200 PIECES

MOUNTING STYLES

R3 - Right Angle, SMT

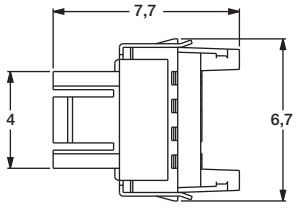

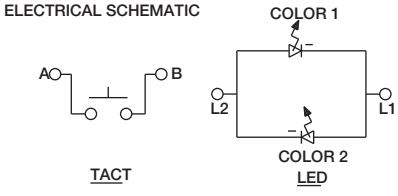

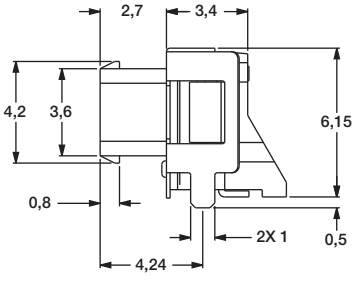

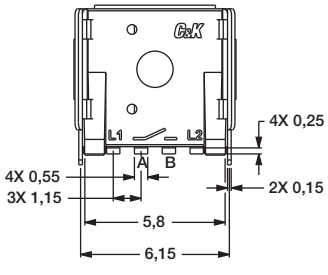

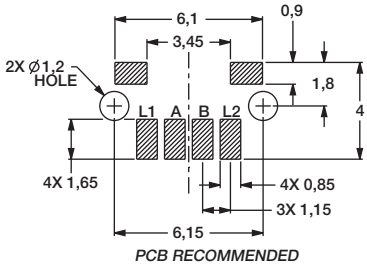

PCB RECOMMENDED

TAPE & REEL: 500 PIECES

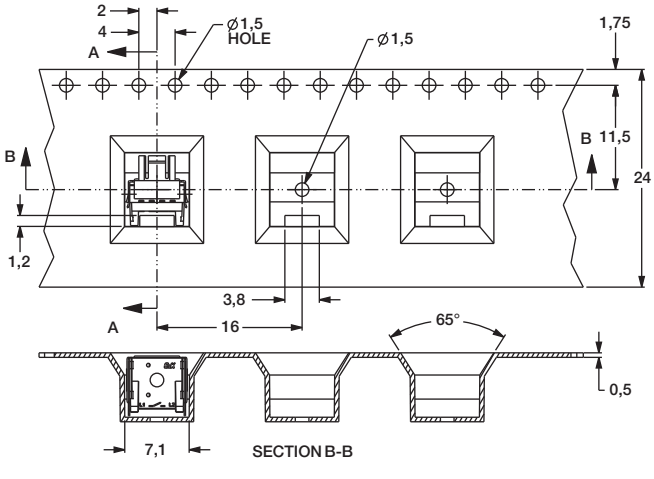

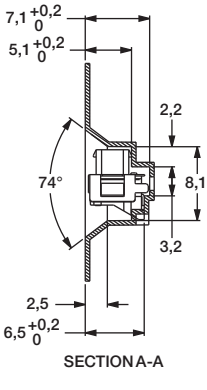

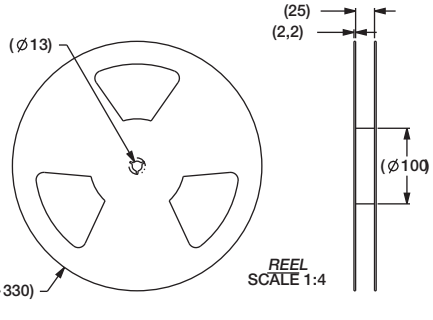

FORCE

OPTION CODE	FORCE
S	Standard 160 gf - V1, V2, V3, R1, R2 options 220 gf - R3 option

CAPS

Use the individual ordering code for each cap

399EA0000

Round cap, clear

3	9	9	E	A	0	0	0	0

Material
A Polycarbonate - Natural/Clear

Paint Color
0 No paint

Marking
00 No marking

Marking Color
0 No marking

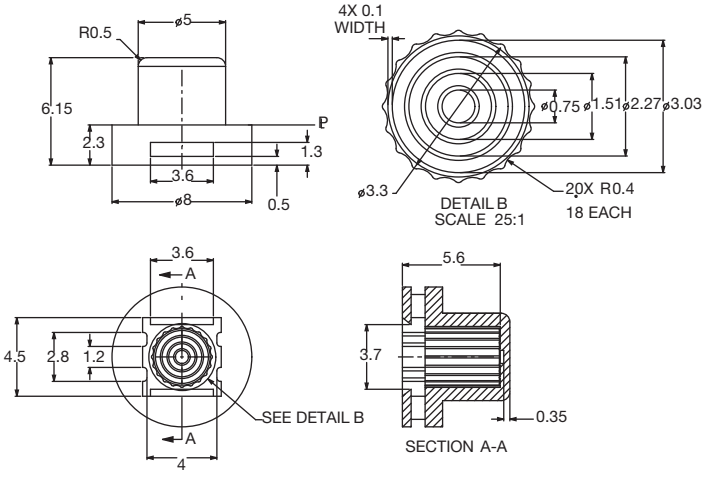

ITS Series
Illuminated Tact Switch

CAPS

400EA0000

Natural/clear

400EB0000

Translucent white, flat edge

400ECA01E

Matte silver paint laser etch, flat edge

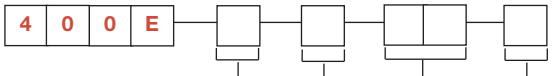

Material
- **A** Natural/Clear - polycarbonate
- **B** Translucent white - polycarbonate
- **C** Silver paint laser etch - polcarbonate

Paint Color
- **0** No paint
- **A** Matte silver

Laser Etch Marking
- **00** No marking
- **01** Power On/Off
- **04** Arrow right
- **05** Arrow left
- **06** Arrow up
- **07** Arrow down
- **09** Power
- **33** Arrow up (fill)
- **34** Arrow down (fill)
- **97** I/O

Marking Color
- **0** No marking
- **E** Laser etch (painted caps only)

ITSXXFR1ST &
400ECA01E cap

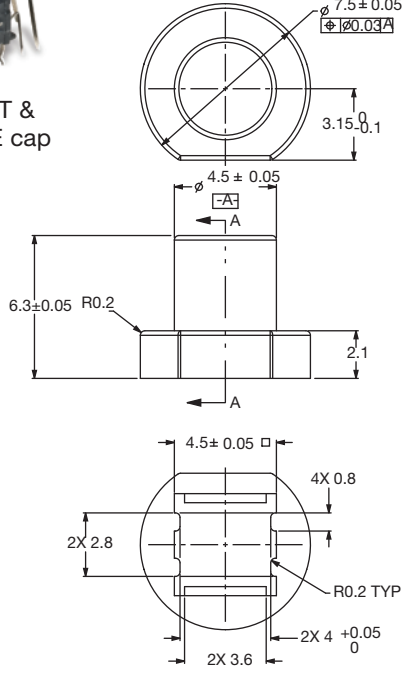

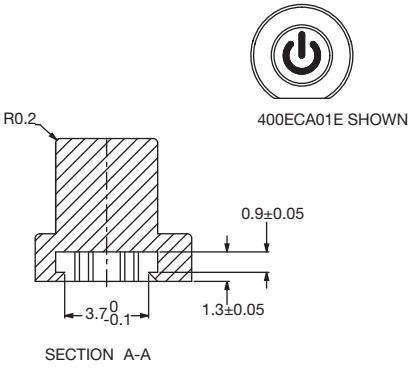

400E cap dimensions shown are "as molded" (no paint).

CAPS

401ECA06E

Matte silver paint, laser etch, tall oval

4	0	1	E						

Material
- **A** Natural/clear - polycarbonate
- **B** Translucent white - polycarbonate
- **C** Paint laser etch - polycarbonate

Paint Color
- **0** No paint
- **A** Matte silver

Laser Etch Marking
- **00** No marking
- **06** Arrow up
- **07** Arrow down
- **33** Arrow up (fill)
- **34** Arrow down (fill)

Marking Color
- **0** No marking
- **E** Laser etch (painted caps only)

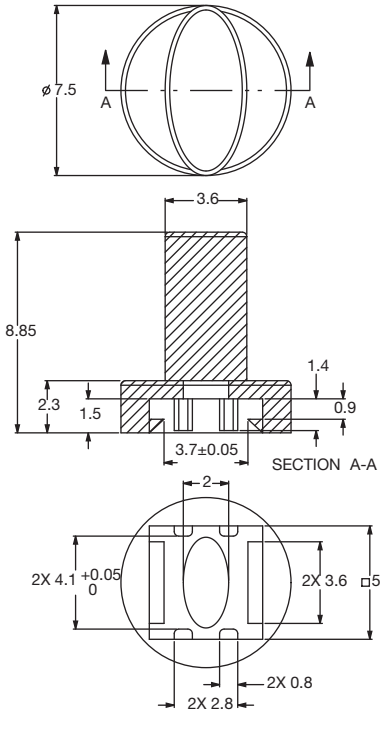

401E cap dimensions shown are "as molded" (no paint).

Navigation Switches
Product Selection Guide

Navigation		
Series	**TSW**	**CS**
Number of directions	3 7	4
Size on PCB L x W (mm)	ø 21 ø 34,4	40 x 40
Total Height (mm)	3,5 6,0	58
Actuation Force (N)	2,2 to 3,0 scanning and select, 0.5N cm rotation	4,9N
Contact Type	Silver	NA
Max. Voltage (VDC)	10	12
Max. Switching Power (A)	0.001	0.2
Life Cycles/ per way	1,000,000	10,000
Sealing	Not sealed	Not sealed
Page Number	C–3	C–6

TSW Series
3 or 7 Function Tact and Scroll Wheel

Features/Benefits

- ***Compact and slim***
- ***Multiple function in one component (rotary, select)***
- ***Easy installation***
- ***Through hole termination***
- ***Integrated decoration (B type)***

Typical Applications

- ***Remote controls***
- ***Desk phones***
- ***Keyboards***
- ***Printers***
- ***Entertainment systems***
- ***White goods***

Operation Characteristics

OPERATING FORCE: See chart below
24 detent - 12 pulses/360˚

Specifications

INITIAL CONTACT RESISTANCE: Max. 300mΩ
INSULATION RESISTANCE: Min. 100 MΩ (100 VDC)
RATING: 1mA 10 VDC
LIFE CYCLE: See chart below
OPERATING FREQUENCY:
Rotation - Max. 30 operations per minute
Push - Max. 120 operations per minute
Depression - Max. 300 gf

Environmental

OPERATING TEMPERATURE: 0˚C / 40˚C
STORAGE TEMPERATURE: -40˚C / 70˚C
VIBRATION RESISTANCE: 10 ~ 55 Hz, displacement 0.75mm (p-p)
SHOCK RESISTANCE: Destruction 1,000 m/s² (approx. 100G) max.
WAVE SOLDERING: Max. 260˚C for 5 seconds
HAND SOLDERING: Max. 260˚C for 5 seconds

Designation	Number of Circuits	Rotation Actuation Force	Push Actuation Force	Cycle Life Rotation (per direction)	Cycle Life Push
TSWA	3	Max. 60g - cm	220g ± 50g	1,000K cycles	1,000K cycles
TSWB	5	Max. 50g - cm	Max 300g	1,000K cycles	1,000K cycles

Part Number	Description	Tray	Box
TSWA-3N-C LFS	Base switch with jog and select, no decoration	80	160
TSWA-3N-CB11 LFS	Base switch with jog and select, white central button, white dial	65	130
TSWA-3N-CD23 LFS	Base switch with jog and select, black central button, grey dial	30	60
TSWB-3N-CB111 LFS	Central select with jog and 4 directions, white central button, dial & direction ring	30	60
TSWB-3N-CB222 LFS	Central select with jog and 4 directions, black central button, dial & direction ring	30	60

TSWA-3N-C LFS

Base switch with jog and select, no decoration

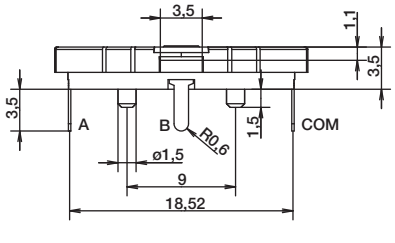

COVER DESIGN GUIDELINE

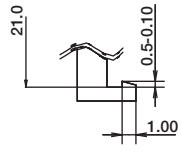

CONTACT CONFIGURATION

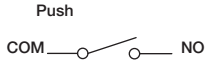

Rotation output waveform

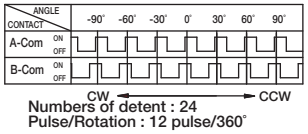

Numbers of detent : 24
Pulse/Rotation : 12 pulse/360˚

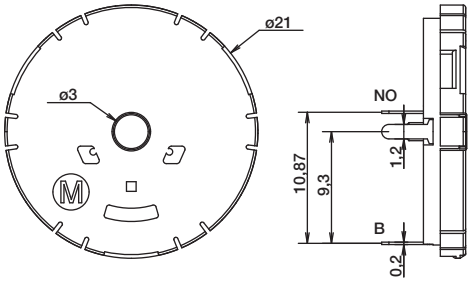

PCB LAYOUT / COMPONENT SIDE

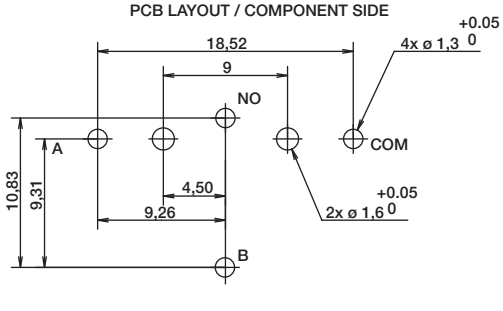

Dimensions are shown: mm
Specifications and dimensions subject to change

TSWA-3N-CB11 LFS

Base switch with jog and select, white central button, white dial

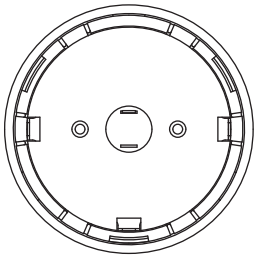

CONTACT CONFIGURATION

Push

Rotation output waveform

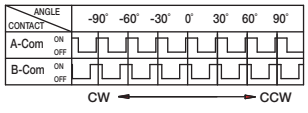

Numbers of detent : 24

Pulse/Rotation : 12 pulse/360˚

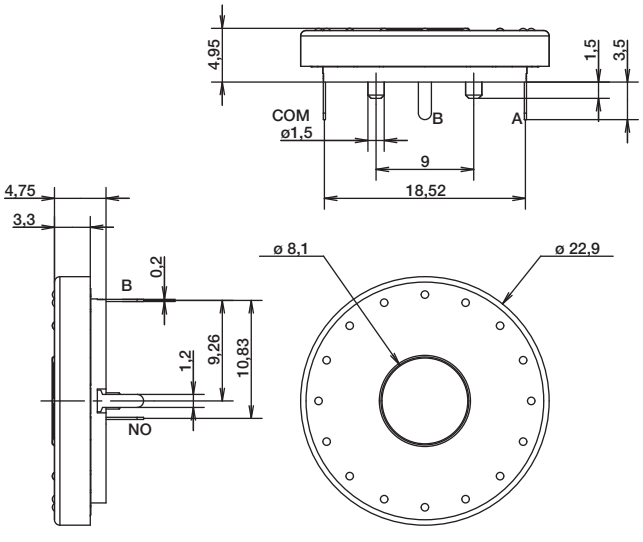

PCB LAYOUT / COMPONENT SIDE

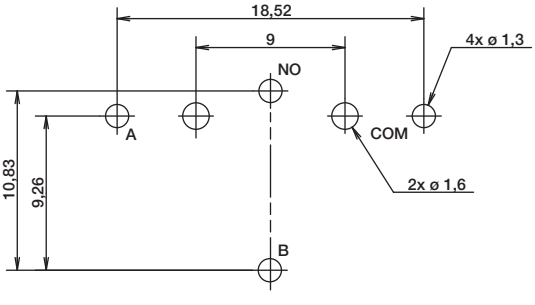

TSWA-3N-CD23 LFS

Base switch with jog and select, black central button, grey dial

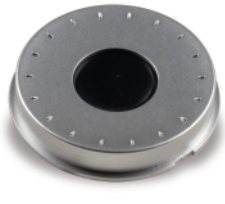

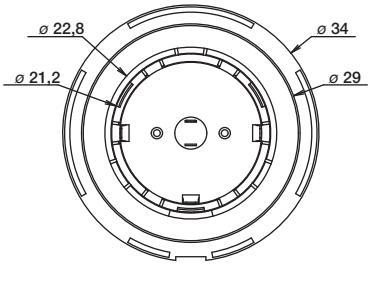

CONTACT CONFIGURATION

Push

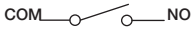

Rotation output waveform

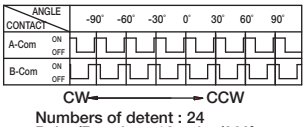

Numbers of detent : 24
Pulse/Rotation : 12 pulse/360˚

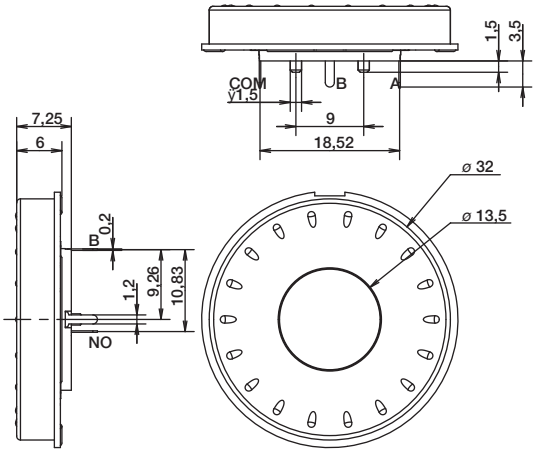

PCB LAYOUT / COMPONENT SIDE

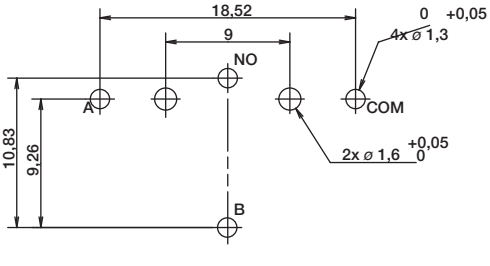

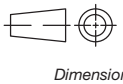

First Angle Projection

Dimensions are shown: mm
Specifications and dimensions subject to change

TSWB-3N-CB111 LFS Central select with jog and 4 directions, white central button, dial & direction ring

TSWB-3N-CB222 LFS Central select with jog and 4 directions, black central button, dial & direction ring

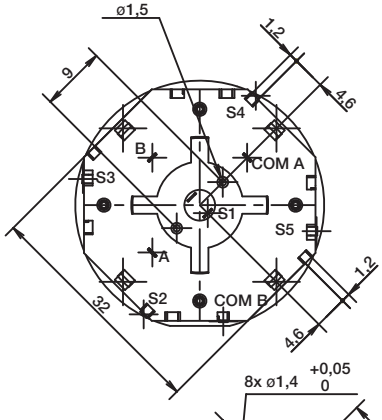

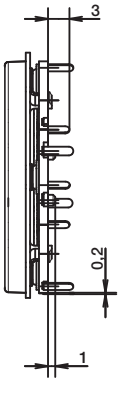

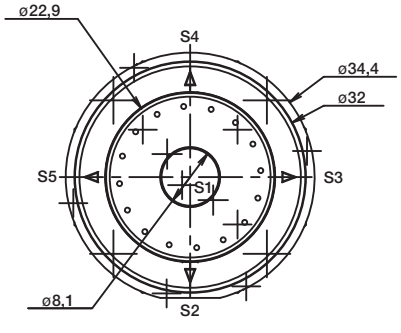

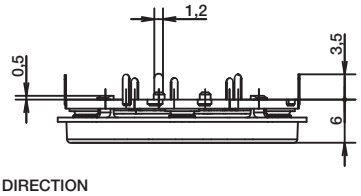

ELECTRICAL FUNCTION

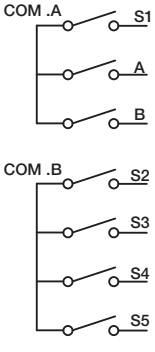

PCB LAYOUT
COMPONENT SIDE

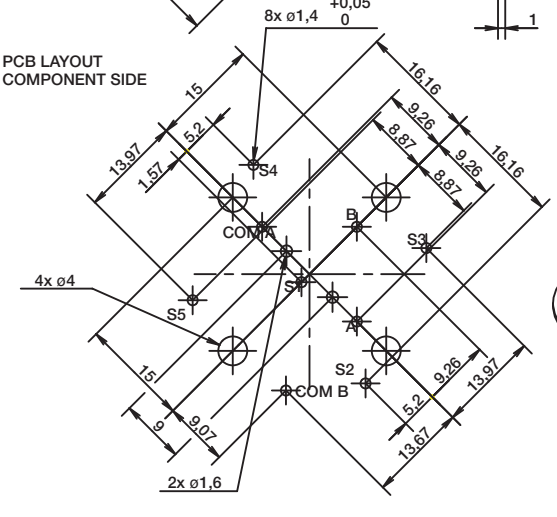

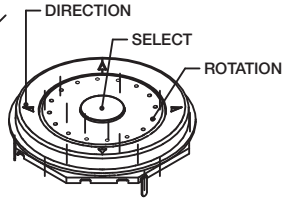

Rotational Output Waveform

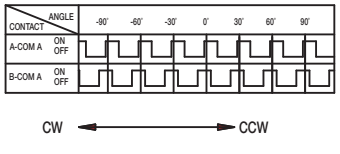

Numbers of detent : 24

Pulse/Rotation : 12 pulse/360°

First Angle Projection

Dimensions are shown: mm
Specifications and dimensions subject to change

CS-41001E Series
4-way Adjustable Direction Switch

Features/Benefits

- ***Designed for mirror control***
- ***Wire harness and connector easy to customize***
- ***4-way adjustable directions***

Typical Applications

- ***Automotive***
- ***Industrial***

Specifications

CONTACT RATING: 0.2 A @ 12 VDC
OPERATING LIFE: 10,000 cycles
INSULATION RESISTANCE: 10 M Ω min. @ 500 VDC
DIELECTRIC STRENGTH: 500 V AC
OPERATING TEMPERATURE: –40ºC to +90ºC
OPERATING FORCE: L- OFF, R-OFF; 200 ±100 gf
OFF-L, OFF-R; 400 ± 200 gf
4 Direction; 500 ± 200 gf

Materials

KNOB: ABS
COVER: ABS
TERMINAL: Brass, tin plated

NOTE: Specifications and materials listed above are for switches with standard options. For information on specific and custom switches, consult Customer Service Center.

PART NUMBER	PACKAGING
CS-41001-E	256 pieces

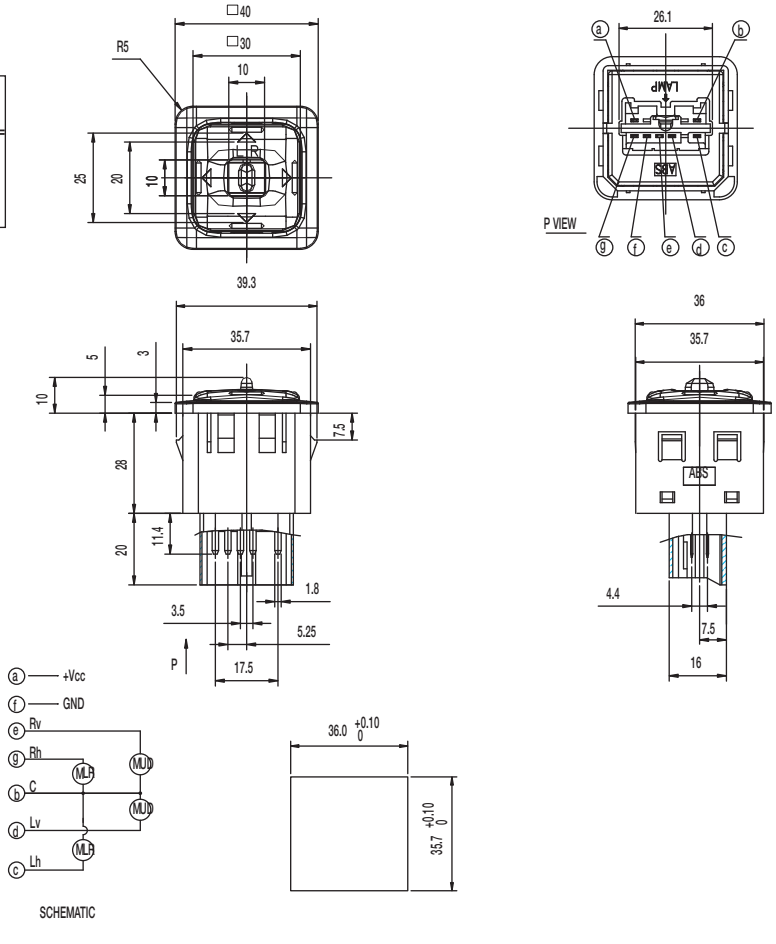

Key Switches
Product Selection Guide

Key Switches					
Series	**K6**	**K12S**	**K12**	**PVA**	**PVB**
Size (mm) L x W x H	7,4 x 10,9 x 8,4	12 x 11,6 x 9,1	12 x 12 x 11	9,2 x 10 x 13,5	PVB4: 9,4 x 9 x 12,5 PVB6: 9,85 x 8,6 x 12,5
Poles/Throws	SPST momentary	SPST / DPST momentary	SPST 2 x SPST momentary	DPST / DPDT momentary or push-on/push off	SPDT PVB4 DPDT PVB6
Maximum Load	30 V / 100 mA	30 V / 100 mA	30 V /100 mA	32 V / 100 mA	14 V / 100 mA or 200 mA
Operating Force	2 N; 3 N; 5 N	3 N; 5 N; 6 N 9 N; 4/8 N; 6/12 N	1,5 N; 2,5 N; 3,5 N; 5 N 3,5/7 N; 6/12 N	1,2 N; 1,7 N; 3,5 N	3 N
Travel (standard)	1,5 mm	1,5 mm	1 mm, 1,5 mm, 2 mm	Mom. 2,4 mm Push-push 2,4/1,5mm	Mom. 2,3 mm Push-push 2,3/1,5mm
Life Cycle	200,000	1,000,000	1,000,000	100,000	PVB4: 100,000 PVB6: 30,000
Sealed		IP40/IP67	K12C only		
Illumination	•	•	•		
Termination	SMT/ Thru-hole	SMT	Thru-hole	Thru-hole	SMT / Thru-hole
Page Number	D-3	D-6	D-9	D-15	D-18

Key Switches	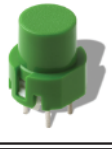	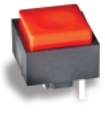			
Series	**D6**	**KS**	**Digitast**	**ED /EDM**	**KBD**
Size (mm) L x W x H	12 x 11,4 x 14,5	12,4 x 12,4 x 9,9	17,1x12,3 x 14,3	12,7 x 11,3 x 1,2	15,6 x 15,6 x 15
Poles/Throws	SPST momentary	SPST SPDT	SPDT momentary or push-on/push off	SPST momentary	SPST momentary
Maximum Load	32 V/100 mA*	50 V/25 mA	24 V / 10 mA	100 V/100 mA	12 VDC /10 mA
Operating Force	1,3 N 2,75 N		1,5 N	2,4 N to 6,5N	45gf / 55gf / 60gf 0,4N / 0,5N / 0,6N
Travel (standard)	1 mm 1.10 mm	0,71 mm	3 mm	0,3 mm	1,5 ~ 2 mm
Life Cycle	250,000	100,000	5,000,000	1,000,000	50,000,000
Sealed				•	•
Illumination			•		
Termination	Thru-hole	Thru-hole	Thru-hole	Thru-hole/SMT	Thru-hole
Page Number	D-23	D-26	D-29	D-32	D-34

* Maximum value are for voltage and current separately

Dimensions are shown: mm
Specifications and dimensions subject to change

Features/Benefits

- *Excellent tactile feel*
- *Wide variety of LED's, travel and actuation forces*
- *Designed for low-level switching*
- *Detector version available*
- *RoHS compliant*

Typical Applications

- *Automotive*
- *Industrial electronics*
- *Computers and network equipment*

Construction

FUNCTION: momentary action
CONTACT ARRANGEMENT: 1 make contact = SPST, N.O.
DISTANCE BETWEEN BUTTON CENTERS:
min. 7,5 and 11,8 (0.295 and 0.465)
TERMINALS: Snap-in pins, tinned
MOUNTING: Soldered by PC pins, locating pins
PC board thickness: 1,5 (0.0591)

Mechanical

TOTAL TRAVEL/SWITCHING TRAVEL: 1,5/0,9 (0.059/0.035)
PROTECTION CLASS: IP 40 according to DIN/IEC 529

1) Voltage rise: 300 V/s
2) According to DIN 41640; IEC 512-2
3) Higher values upon request

Packaging

THT: bulk in boxes of 500 pieces
SMT: bulk in boxes of 500 pieces
reels of 500 pieces (with LED) or 750 pieces (without LED)

Electrical

SWITCHING POWER MIN./MAX.: 0.02 mW / 3 W DC
SWITCHING VOLTAGE MIN./MAX.: 2 V DC / 30 V DC
SWITCHING CURRENT MIN./MAX.: 10 mA /100 mA DC
DIELECTRIC STRENGTH (50 Hz)[1) 2)]: ≥ 300 V
OPERATING LIFE: ≥ 2 x 10^5 operations [3)]
≥1 X 10^5 operations for SMT version
CONTACT RESISTANCE: Initial ≤ 50 mΩ
INSULATION RESISTANCE: ≥ 10^{10} Ω
BOUNCE TIME: ≤ 1 ms
Operating speed 100 mm/s (3.94/s)

Environmental

OPERATING TEMPERATURE: -40˚C to 85˚C.
STORAGE TEMPERATURE: -40˚C to 95˚C.

Process

SOLDERABILITY:
THT: wave soldering, compatible with lead free soldering profile
Hand soldering, 350˚C for 3s
SMT: not compatible with lead free reflow profile
245˚C for 5s

How To Order

Our easy build-a-switch concept allows you to mix and match options to create the switch you need. To order, select desired option from each category and place it in the appropriate box.

Note: Some of the configurations may not be available or could require some development.

K 6 [ ][ ] — [ ][ ] — 1.5 — [ ][ ] — [ ][ ][ ][ ][ ] — [ ][ ]

Series
K6B
K6BL with LED
K6S SMT (with metallic frame)
K6SL SMT with LED (with metallic frame)

LED*
NONE Models without LED
GN Green
YE Yellow
OG Orange
RD Red
WH White
BU Blue

Travel
1.5 1,5mm (0.059)

Operating Force
3N 3 N 300 grams
5N 5 N 500 grams
2N OD 2 N 200grams without snap-point

Standard LED Code
NONE Models without LED
LV306 Green
LV327 Yellow
LV315 Orange
LV352 Red
LV302 White
LV328 Blue

Frame Option
(for K6B and K6BL)
SD Metallic frame

* Additional LED colors available by request.

K6
Miniature Key Switches

SERIES

K6B WITHOUT LED
K6BL WITH LED

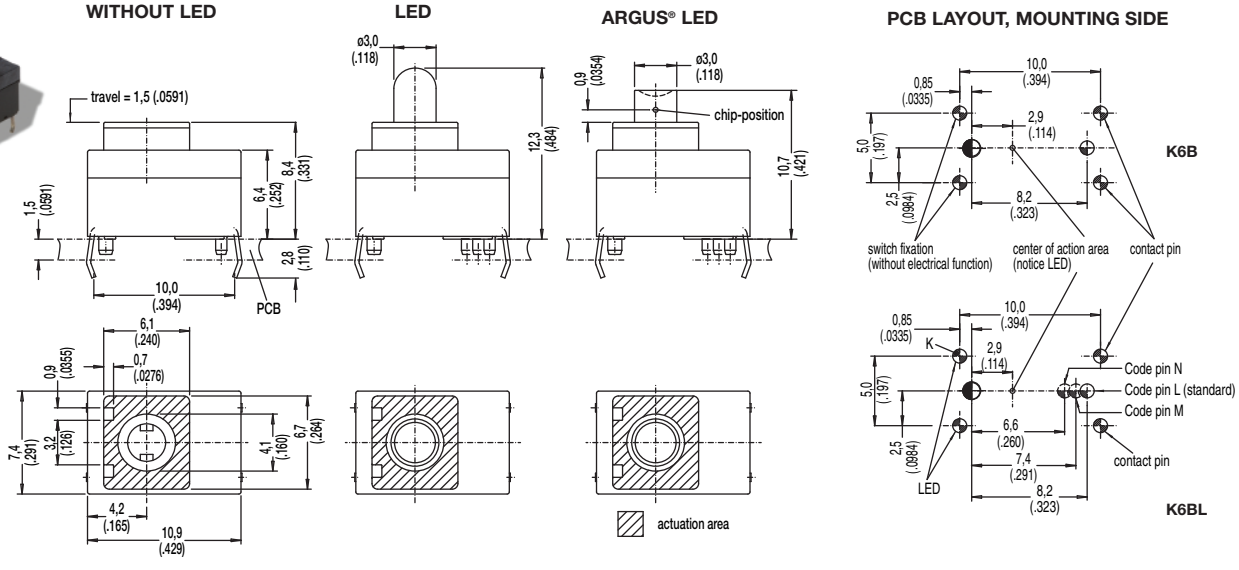

SCHEMATIC	
K6B	K6BL

Hole	Ø	Without LED	With LED	Description	Terminal Section	Surface
	1,2+0,1 (.0471+.00349)	1x	1x	center hole		
	0,9+0,1 (.0354+.00349)	1x	1x	code (L,M,N)		
	1,0+0,1 (.0354+.00349)		2x		0.6 x 0.3 (.0236 x .0118)	SnPb
		4x	2x	LED switch		

K6S WITHOUT LED
K6SL WITH LED

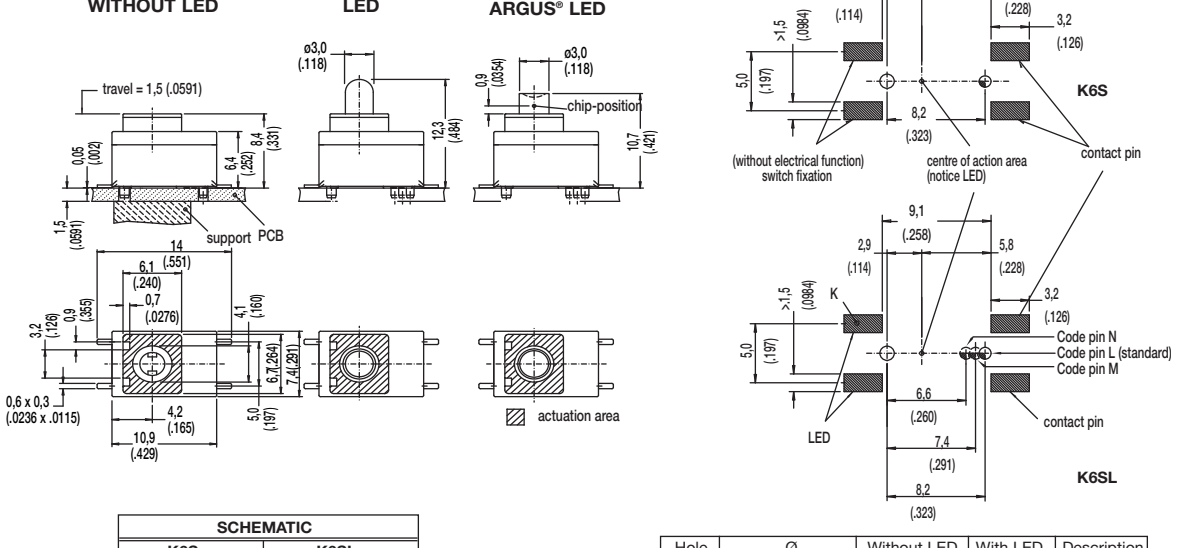

SCHEMATIC	
K6S	K6SL

Hole	Ø	Without LED	With LED	Description
	1,2+0,1 (.0471+.00349)	1x	1x	center hole
	0,9+0,1 (.0354+.00349)	1x	1x	code (L,M,N)

First Angle Projection

Dimensions are shown: mm
Specifications and dimensions subject to change

LED

OPTION CODE	COLOR
NONE	Models without LED
GN	Green
YE	Yellow
OG	Orange
RD	Red
WH	White
BU	Blue

STANDARD LED CODE	COLOR
NONE	Models without LED
LV306	Green
LV327	Yellow
LV315	Orange
LV352	Red
LV302	White
LV328	Blue

Additional LED colors available by request

TRAVEL

1.5 1.5 MM

OPERATING FORCE

OPTION CODE	OPERATING FORCE
3N	3 N, 300 g
5N	5 N, 500 g
2N OD	2 N, 200g without snap-point

FRAME OPTION

SD METALLIC FRAME (OPTION FOR K6B AND K6BL)

NOTE: K6S and K6SL are equiped with metallic frame (SD not specified)

First Angle Projection

Dimensions are shown: mm
Specifications and dimensions subject to change

K12S
High Performance SMT Key Switches

Features/Benefits

- ***Harsh environment applications - IP67***
- ***Compatible with SMT lead free soldering process***
- ***Illuminated***
- ***Excellent tactile feel***
- ***High reliability / long life***
- ***DPST and detect versions available***
- ***RoHS compliant***

Typical Applications

- ***Automotive***
- ***Off-road transportation***
- ***Motorcycles***
- ***Industrial***
- ***Medical***
- ***Network***
- ***Joysticks***

Construction:

FUNCTION: Momentary
CONTACT ARRANGEMENT: SPST or DPST
CONTACT TYPE: NO or NC
TERMINALS: SMT

Mechanical

TOTAL TRAVEL: 1,5 mm
OPERATING FORCE: 3N; 5N; 6N; 9N 4/8 N; 6/12 N
SEALING: IP40 or IP67

Packaging

Reels of 900 pieces

Electrical

SWITCHING POWER MIN./MAX.: 0.02mW/3 W DC
SWITCHING VOLTAGE MIN./MAX.: 2 V / 30 V DC
SWITCHING CURRENT MIN./MAX.: 10 mA /100 mA DC
DIELECTRIC STRENGTH: > 300 V RMS
OPERATING LIFE: > 10^6 operations (F<5N) / 10^5 operations (F≥5N)
CONTACT RESISTANCE: Initial < 100mΩ - After test < 250mΩ
INSULATION RESISTANCE: >10^9 Ω
BOUNCE TIME: < 10 ms

Environmental

OPERATING TEMPERATURE: -40˚C to 85˚C.
STORAGE TEMPERATURE: -40˚C to 95˚C.
RoHS compliant and Halogen free.

Process

SOLDERABILITY: Lead free soldering compatible.

How To Order

Our easy build-a-switch concept allows you to mix and match options to create the switch you need. To order, select desired option from each category and place it in the appropriate box.

K 1 2 S [ ] — [ ] — [ ][ ][ ] — 1 . 5 — [ ][ ][ ] N — [ ][ ] — L F T X

Sub-Series
- **A** IP40 with peg
- **B** IP67 with peg
- **C** IP40 without peg
- **D** IP67 without peg

Option
- **S** SPST version
- **L** LED version (SPST)
- **D** DPST version

LED Color
- **NONE** No LED
- **YE0** Yellow
- **RD0** Red
- **GN0** Green
- **OR0** Orange
- **WH0** White
- **AM0** Amber

Travel
- **1.5** 1.5 mm

Operating Force
- **3N** 3 N
- **5N** 5 N
- **6N** 6 N
- **9N** 9 N
- **4/8N** 4/8 N (double step actuation)
- **6/12N** 6/12 N (double step actuation)

Contact Arrangement
- **O** Normally open (SPST)
- **C** Normally closed (SPST)
- **OO** 2 Normally open (DPST)
- **CC** 2 Normally closed (DPST)
- **OC** 1 Normally open 1 Normally closed (DPST)

LFTX Lead free, RoHS terminals tin plated Translucent button

K12SA/K12SC IP40 with peg / IP40 without peg

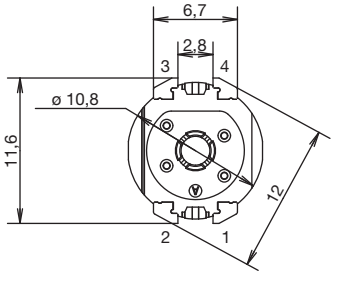

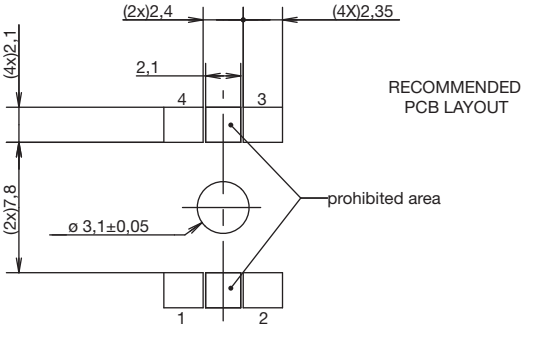

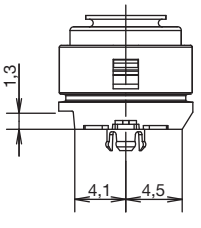

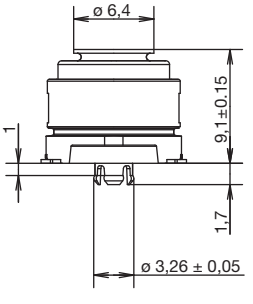

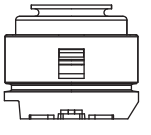

Without Peg

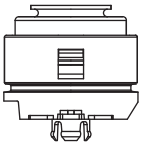

With Peg

K12SB / K12SD IP67 with peg / IP67 without peg

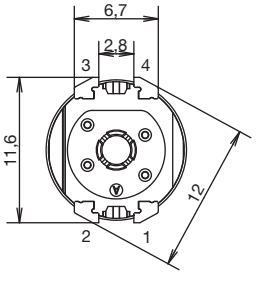

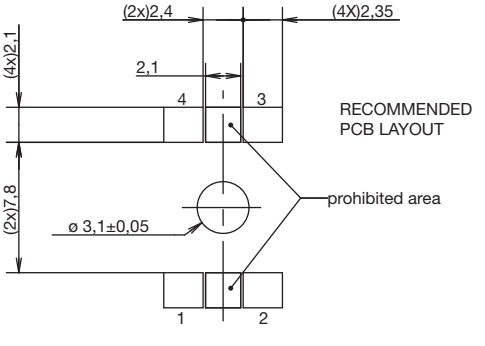

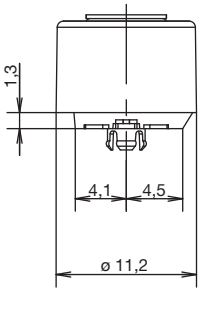

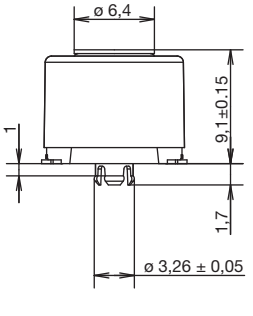

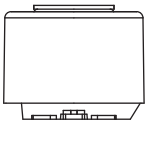

Without Peg

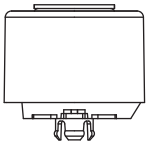

With Peg

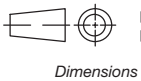

First Angle Projection

Dimensions are shown: mm
Specifications and dimensions subject to change

K12S
High Performance SMT Key Switches

OPTION

S SPST version

Single NO

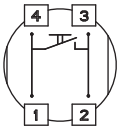

Single NC

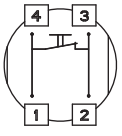

L LED version

Single NO + LED

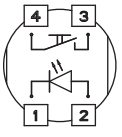

Single NC + LED

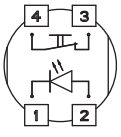

D DPST version

Double NO

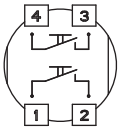

Double NC

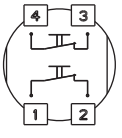

LED COLOR

OPTION CODE	LED COLOR
	No LED
YE0	Yellow
RD0	Red
GN0	Green
OR0	Orange
WH0	White
AM0	Amber

TRAVEL

1.5 1.5 mm

OPERATING FORCE

OPTION CODE	OPERATING FORCE
3N	3N
5N	5N
6N	6N
9N	9N
4/8N	4/8N (double step actuation)
6/12N	6/12N (double step actuation)

CONTACT ARRANGEMENT

O Normally open (SPST and LED versions)

C Normally closed (SPST and LED versions)

OO 2 Normally open (DPST version)

CC 2 Normally closed (DPST version)

OC(1) 1 Normally open/ 1 Normally closed (DPST)

(1) Please contact Technical support for this configuration using the "Ask a Specialist"option on the K12S product web page.

TAPE AND REEL

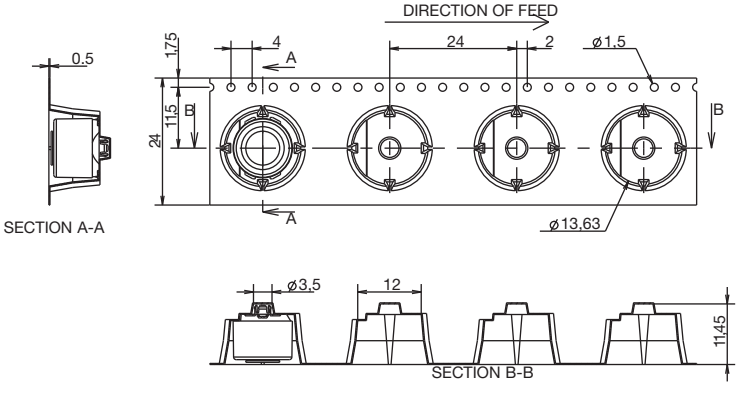

Dimensions are shown: mm
Specifications and dimensions subject to change

High Performance Key Switches

Features/Benefits

- *Excellent tactile feel*
- *Wide choice of LED colors, travel and actuator forces*
- *High reliability / long life*
- *Sealed version available*
- *Designed for low-level switching*
- *Double stroke version available*
- *Detector version available*

Typical Applications

- *Automotive*
- *Off-road transportation*
- *Industrial electronics*
- *Computers & network equipment*
- *Joysticks*

Construction:

FUNCTION: momentary
DISTANCE BETWEEN BUTTON CENTERS:
min. 11 (0.433) K12C = 13 (0.512)
TERMINALS: PC pins, tinned
MOUNTING: Locating pins; K12G and K12P additionally with snap-in housing

Mechanical

TOTAL TRAVEL: 1 mm, 1,5 mm, 2 mm
SWITCHING TRAVEL: 0,6 mm*
OPERATING FORCE: 1.5 N OD without snap-point as detector switch, 2.5 N, 3.5 N, 5 N, 3.5/7 N, 6/12 N. Additional operating force 7N, 9N and 20N, available on request.
PROTECTION CLASS: K12C IP 67 (dust tight, protected against the effects of immersion in water; other versions IP 40)

* Additional switching travel (with pre-travel) available by request.

Packaging

Bulk in boxes of 250 pieces (version C or GO) or 300 pieces (version A, AL, P or PL)

Electrical

SWITCHING POWER MIN./MAX.: 0.02mW/3 W
SWITCHING VOLTAGE MIN./MAX.: 2 V DC / 30 V DC
SWITCHING CURRENT MIN./MAX.: 10 mA /100 mA
DIELECTRIC STRENGTH (50 Hz, 1 min): ≥ 500 V
OPERATING LIFE with max. switching power: ≥ 10^6 operations
K12G & K12GO; operating life of second switch 5 x 10^4 operations, operating life K12C and version with more than 6N (7N, 9N 20N) please consult factory.
CONTACT RESISTANCE: Initial ≤ 50 mΩ
INSULATION RESISTANCE: ≥ 10^{10} Ω
BOUNCE TIME: ≤ 1 ms
Operating speed 100 mm/s (3.94/s)

Environmental

OPERATING TEMPERATURE: -40˚C to 85˚C.
STORAGE TEMPERATURE: -40˚C to 95˚C.

Process

SOLDERABILITY:
Wave soldering, compatible with lead free soldering profile
Hand soldering, 350˚C

How To Order

Our easy build-a-switch concept allows you to mix and match options to create the switch you need. To order, select desired option from each category and place it in the appropriate box.

Note: Some of the configurations may not be available or could require some development.

K | 1 | 2 | ☐☐ — ☐☐ — ☐☐ — ☐☐ — ☐☐ — ☐☐☐☐☐ — ☐☐

Series

K12A	No snap-in pegs
K12AL	No snap-in pegs with central LED
K12P	With snap-in pegs
K12PL	With central LED
K12C	Sealed contact with rubber cap (IP 67)
K12GO	Two-step switch

Cap Color

NONE	version with LED, version C
BK	Black cap – No LED
YE	Yellow cap - No LED
RD	Red cap – No LED
GY	Gray cap – No LED

LED Color

NONE	No LED
GN	Green
YE	Yellow
OG	Orange
RD	Red
WH	White
BU	Blue

Travel*

1	1 mm (0.039)
1.5	1.5 mm (0.059)
2	2 mm (0.079)

Operating Force***

1.5N OD	1.5 N without snap-point
2.5N	2.5 N
3.5N	3.5 N
5N	5 N
3.5/7N	3.5/7 N**
6/12N	6/12 N**

Standard LED Code

NONE	No LED
LV306	Green
LV327	Yellow
LV315	Orange
LV352	Red
LV302	White
LV328	Blue

Contact Arrangement

NONE	SPST NO (STD)
1R	SPST NC (Special request)

* K12C – 1mm MAX
K12 with LED – 1.5 mm MAX
** K12G & K12GO version only
*** Additional operating force: 7N, 9N available on request

Dimensions are shown: mm
Specifications and dimensions subject to change

K12
High Performance Key Switches

SERIES

K12A without snap in

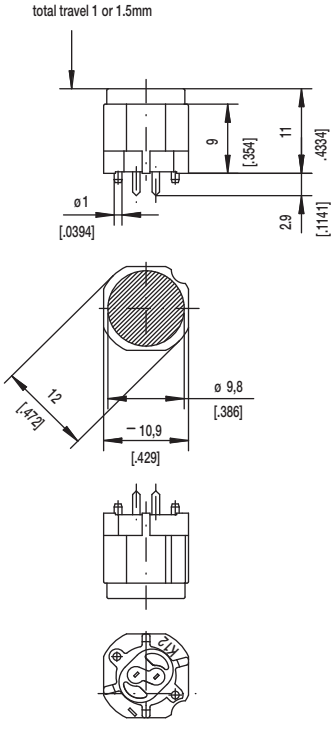

PCB LAYOUT, MOUNTING SIDE

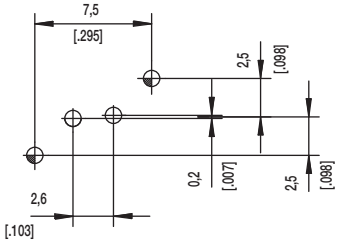

K12AL

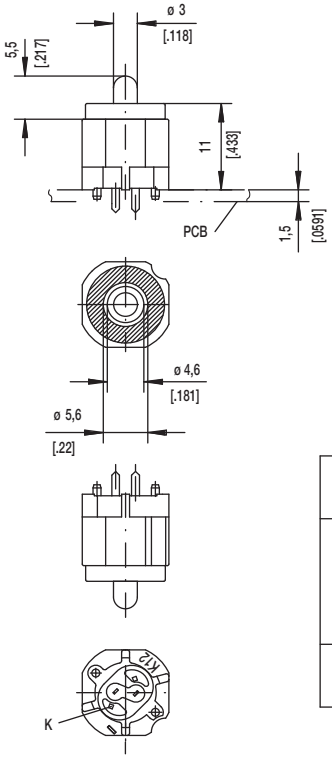

PCB LAYOUT, MOUNTING SIDE

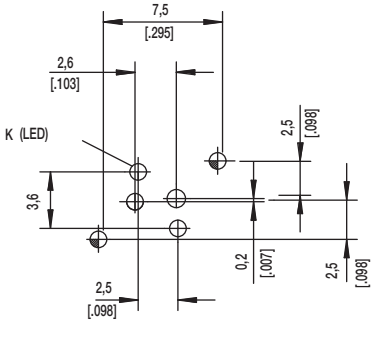

⊕	$1,1^{+0,05}$	2x	2x	center hole		
⊕	$0,9^{\pm 0,05}$		2x	LED	ø0,5 (.020)	Sn
		2x	2x	switch	0,7x0,2 (.028x.081)	Sn
Hole	ø	Without	with LED	Discription	Terminal Section	Surface

First Angle Projection

Dimensions are shown: mm
Specifications and dimensions subject to change

SERIES

K12P with snap in

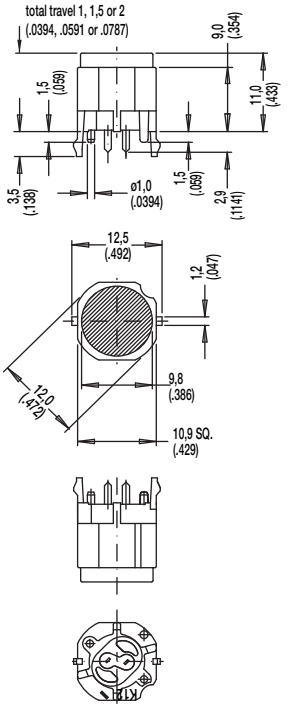

PCB LAYOUT, MOUNTING SIDE

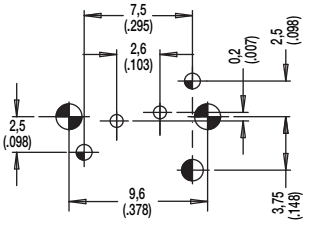

center of actuation area (notice LED)

Hole	Ø	Without LED	Description	Terminal Section	Surface
	1,7 (.069)	2x	snap-in		
	1,6 (.062)	1x	coding hole (L,M,N)		
	1,1 (.043)	2x	center hole		Sn
	0,9 (.035)	2x	switch	0.7 x 0.2 (.028 x .081)	Sn

K12PL

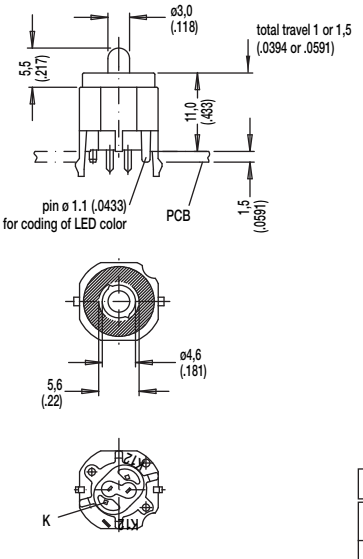

PCB LAYOUT, MOUNTING SIDE

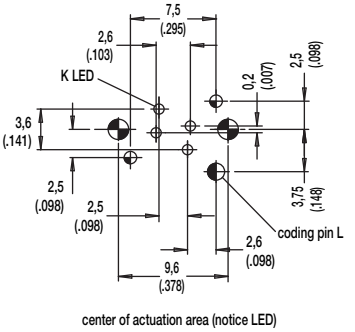

center of actuation area (notice LED)

Hole	Ø	Without LED	Description	Terminal Section	Surface
	1,7 (.069)	2x	snap-in		
	1,6 (.062)	1x	coding hole (L,M,N)		
	1,1 (.043)	2x	center hole		Sn
	0,9 (.035)	2x	LED	m0.5 (.020)	Sn
		2x	switch	0.7 x 0.2 (.028 x .081)	

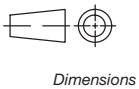

First Angle Projection

Dimensions are shown: mm
Specifications and dimensions subject to change

K12
High Performance Key Switches

SERIES

K12C SEALED CONTACT WITH RUBBER CAP (IP 67)

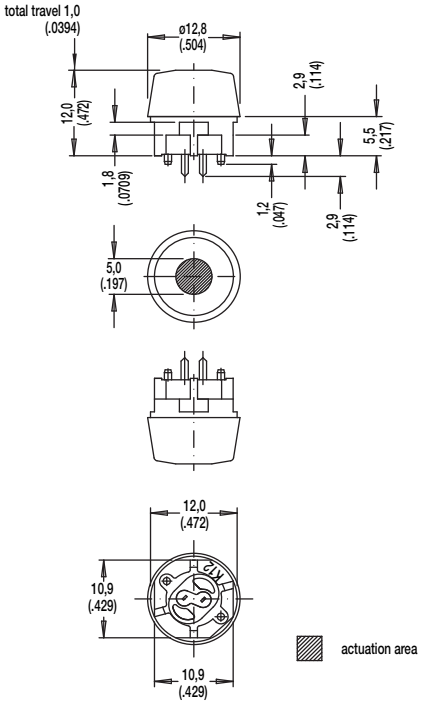

PCB LAYOUT, MOUNTING SIDE

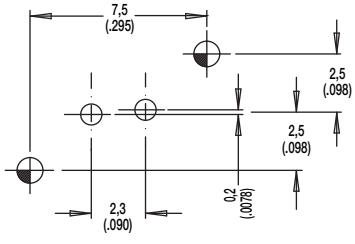

SCHEMATIC	
A	R

Hole	Ø	Without LED	Description	Terminal Section	Surface
	1,1 (.043)	2x	center hole		
	0,9 (.035)	2x	switch	0.7 x 0.2(.0275 x .0787)	Sn

First Angle Projection

Dimensions are shown: mm
Specifications and dimensions subject to change

SERIES

K12GO

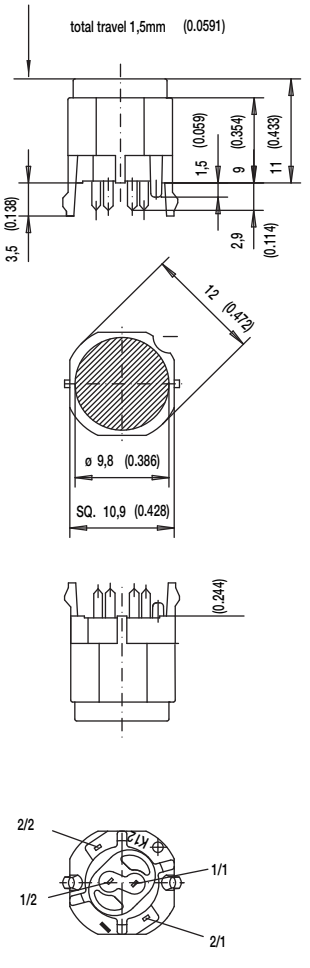

PCB LAYOUT, MOUNTING SIDE

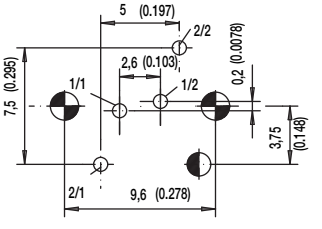

SCHEMATIC K12G

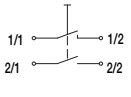

Hole	Ø	Without LED	Description	Terminal Section	Surface
	1,7 (.069)	2x	snap-in		
	1,6 (.062)	1x	code		
	0,9 (.035)		LED	m0.5 (.020)	Sn
		2x	switch 2	0.7 x 0.3 (.028 x .012)	Sn
		2x	switch 1	0.7 x 0.2 (.028 x .081)	Sn

First Angle Projection

Dimensions are shown: mm
Specifications and dimensions subject to change

CAP COLOR

OPTION CODE	COLOR
NONE	Version with LED
BK	Black - no LED
YE	Yellow - no LED
RD	Red - no LED
GY	Gray - no LED

LED COLOR

OPTION CODE	COLOR
NONE	Models without LED
GN	Green
YE	Yellow
OG	Orange
RD	Red
WH	White
BU	Blue

STANDARD LED CODE	COLOR
NONE	Models without LED
LV306	Green
LV327	Yellow
LV315	Orange
LV352	Red
LV302	White
LV328	Blue

TRAVEL

1 1 mm
1.5 1.5 mm
2 2 mm

OPERATING FORCE

OPTION CODE	OPERATING FORCE
1.5N OD	1.5 N,150g without snap-point
2.5N	2.5 N, 250g
3.5N	3.5 N, 350g
5N	5 N, 500g
3.5/7N	3.5/7 N, 350/700g
6/12N	6/12 N, 600-1200g

CONTACT ARRANGEMENT OPTION

1R SPST NC (SPECIAL REQUEST FOR NORMALLY CLOSED OPTION)

First Angle Projection

Dimensions are shown: mm
Specifications and dimensions subject to change

Features/Benefits

- *Compact design*
- *Short stroke to latch*
- *Wide variety of actuator heights*
- *Adapted for medium power applications*
- *RoHS compliant and compatible*

Typical Applications

- *Automotive (air conditioning, lighting)*
- *Industrial*
- *Control panel*

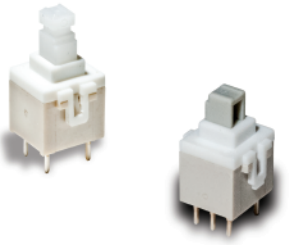

Construction

FUNCTION: Momentary, Push-Push
CONTACT ARRANGEMENT:
PVA1: 2 make contacts (DPST)
PVA2: 2 change over contacts (DPDT)
SWITCHING MODE: Non-shorting
TERMINALS: PC pins[1]

Mechanical

TOTAL TRAVEL / LATCHING TRAVEL:
OA: 2,4 mm
EE: 2,4 / 1,5 mm
ELECTRICAL TRAVEL: 0.8 mm (1.1 for PVA2 OA H5)
OPERATING FORCE: 1,2N; 1,7N; 3,5N

Process

SOLDERABILITY:
Wave soldering, compatible with lead free soldering profile
Hand soldering, 350˚C for 3 seconds

Note: Specifications listed above are for switches with standard options.
For information on specific and custom switches, please contact technical support using the "Ask a Specialist"option on the PVA product web page.√

Electrical

SWITCHING POWER MAX.: 3 W DC
SWITCHING VOLTAGE MAX.: 32 V DC
SWITCHING CURRENT MAX.: 100 mA DC*
DIELECTRIC STRENGTH (50 Hz / 1 min):
1000 V between open contacts, PVA2: 750 V
OPERATING LIFE:
OA (momentary): ≥ 1 x 10^5 operations
EE (push-push): ≥ 1 x 10^5 operations
CONTACT RESISTANCE: Initial ≤ 100 mΩΩ
INSULATION RESISTANCE: ≥ 10^{10} Ω
BOUNCE TIME: ≤ 3 ms

Environmental

OPERATING TEMPERATURE: -40˚C to 85˚C.[2]

1) "Snap-in" contacts on request, Version SNA with pins bent inside (standard)
2) With button +70˚C

How To Order

Our easy build-a-switch concept allows you to mix and match options to create the switch you need. To order, select desired option from each category and place it in the appropriate box. **Some of the configurations may not be available or could require some development.**

Switch

P V A [ ] – [ ][ ] – [ ][ ] – [ ][ ][ ] – [ ][ ][ ] – V 2

Series
PVA1 2 make-contacts (DPST)
PVA2 2 changeover contacts (DPDT)

Mechanical Function
OA Momentary
EE Push-push

Total Height
H1 17,5 mm
H2 23 mm
H3 20,5 mm
H4 15 mm
H5 13 mm (momentary & PVA2 only)

Operating Force
1.2N PVA1 only
1.7N PVA2 only
3.5N

Termination
NONE Standard terminals
SNA Snap-in terminals

Button

Buttons must be ordered separately.
Shipped in bulk.

[ ][ ] – [ ][ ]

Button
PE
PV

Button Color
RD Red
GR Green
BK Black
WH White

Dimensions are shown: mm
Specifications and dimensions subject to change

PVA
Short Stroke Key Switches

SERIES

PVA1 (DPST)

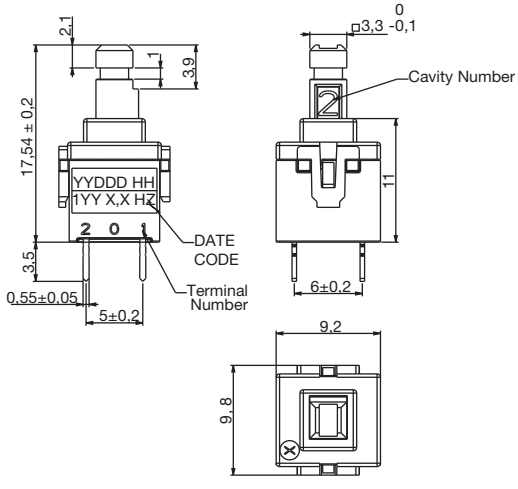

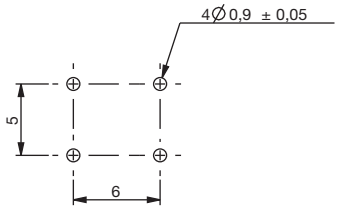

RECOMMENDED LAYOUT

PVA2 (DPDT)

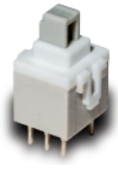

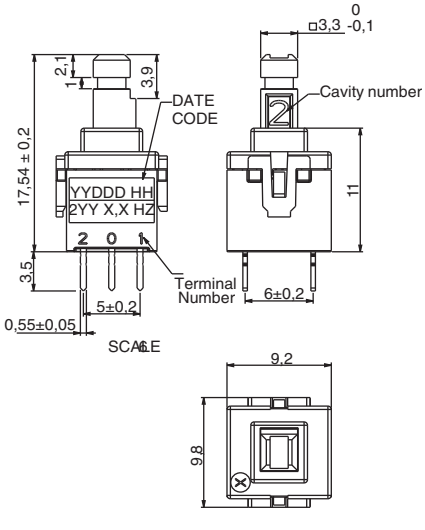

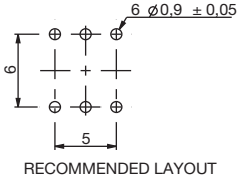

RECOMMENDED LAYOUT

MECHANICAL FUNCTION

OPTION CODE	FUNCTION
OA	Momentary
EE	Push-Push

OA

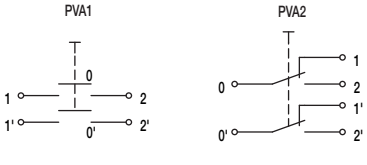

EE

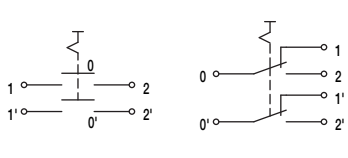

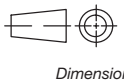

First Angle Projection

Dimensions are shown: mm
Specifications and dimensions subject to change

TOTAL HEIGHT

H1 17,5 MM

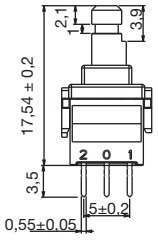

H2 23 MM

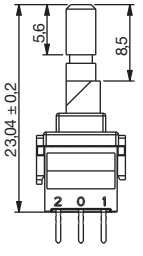

H3 20,5 MM

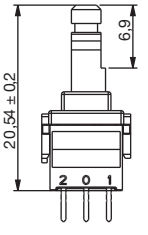

H4 15 MM

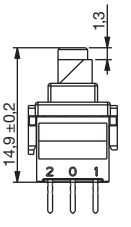

H5 13 MM
(MOMENTARY ONLY)

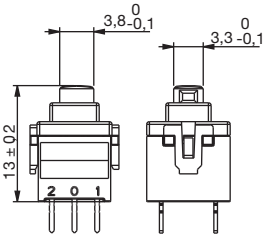

OPERATING FORCE

1.2N PVA1 ONLY
1.7N PVA2 ONLY
3.5N

TERMINATION

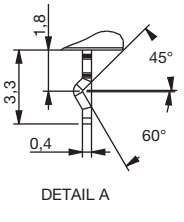

SNA with PVA1

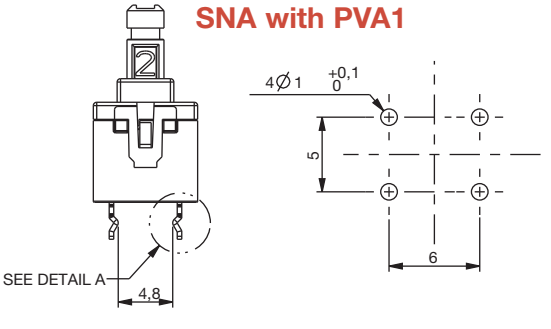

SNA with PVA2

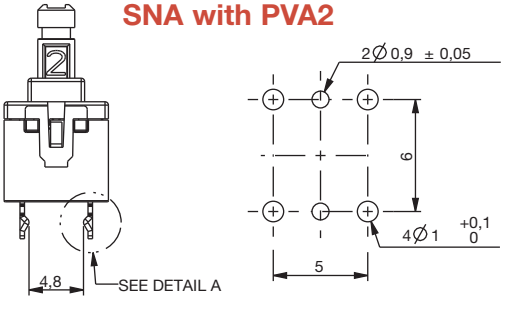

BUTTONS

BUTTONS MUST BE ORDERED SEPARATELY. SHIPPED IN BULK.

PE

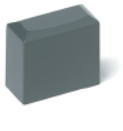

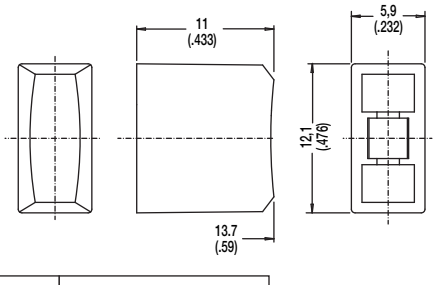

OPTION CODE	COLOR
RD	Red
GY	Gray
BK	Black
WH	White

PV

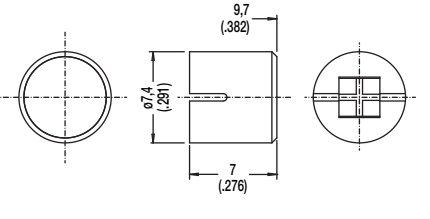

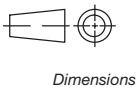
First Angle Projection

Dimensions are shown: mm
Specifications and dimensions subject to change

SPST Momentary Key Switches

Features/Benefits

- *Easy X, Y coding on single side PCB*
- *Positive tactile feedback*
- *High temperature*
- *Wide variety of colors & styles*
- *RoHS compliant and compatible*

Typical Applications

- *Video*
- *Electronic games*
- *Appliances*

Construction

FUNCTION: momentary
CONTACT ARRANGEMENT: 1 make contact (SPST), NO
DISTANCE BETWEEN BUTTON CENTERS, MIN.: 12,7 (0.500)
TERMINALS: PC pins

Electrical

SWITCHING POWER MAX.: 3 VA
SWITCHING VOLTAGE MAX.: 32 V DC
SWITCHING CURRENT MAX.: 100 mA DC
DIELECTRIC STRENGTH (50 Hz / 1 min): 250 V
OPERATING LIFE with max. switching power: ($2{,}5 \times 10^5$ operations)
CONTACT RESISTANCE: ≤100 mΩ
INSULATION RESISTANCE: $\geq 10^8\,\Omega$
BOUNCE TIME: ≤10 ms

Packaging

The D6 switches are delivered in boxes containing 10 trays with 250 pieces each: Total 2,500 pieces per box.
The D6 buttons are delivered in bulk with 2500 pieces per box.

Mechanical

SWITCHING TRAVEL:
Version F1: 0.2mm ≤ Te ≤ 1.0 mm
Version F2: 0.3mm ≤ Te ≤ 1.1 mm
OPERATING FORCE:
Version F1: 0.8N ≤ Fa ≤1.8N
Version F2: 2.0N ≤ Fa ≤ 3.5N

Environmental

OPERATING TEMPERATURE: -20˚C to 85˚C.

Process

SOLDERABILITY:

Wave soldering, compatible with lead free soldering profile
Hand soldering, 350˚C for 3 seconds

How To Order

Our easy build-a-switch concept allows you to mix and match options to create the switch you need. To order, select desired option from each category and place it in the appropriate box.

Switch

D6 [ ] — [ ][ ] — [ ][ ] — LFS

Series
D6C Square
D6R Round
D6L* Plunger
D6F** Flat

Switch Color
00 White
10 Gray
30 Yellow
40 Red
50 Green
60 Blue
90 Black

Force
F1 1.3N(STD)
F2 2.5N

RoHS compliant and compatible product.

*Available only in color 90 (black).
** Available only in color 90 (black) and 00 (white).

Button

Buttons can be ordered separately.
Shipped in bulk.

D6 button for use with D6C only.

B T N D 6 — [ ][ ] — F

Series
BTND6 Button

Button Color
00 White
10 Gray
30 Yellow
40 Red
50 Green
60 Blue
90 Black

Version F1 or F2.

First Angle Projection

Dimensions are shown: mm
Specifications and dimensions subject to change

D6
SPST Momentary Key Switches

SERIES

D6C

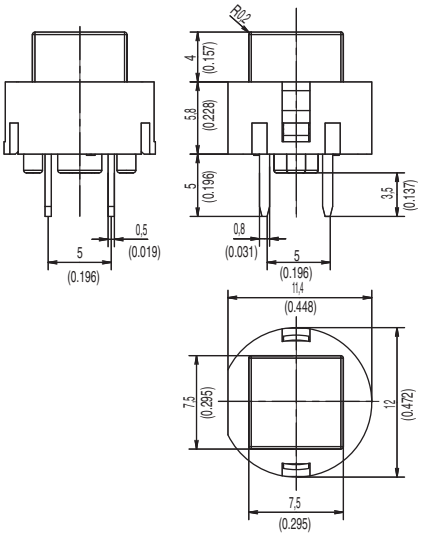

D6R

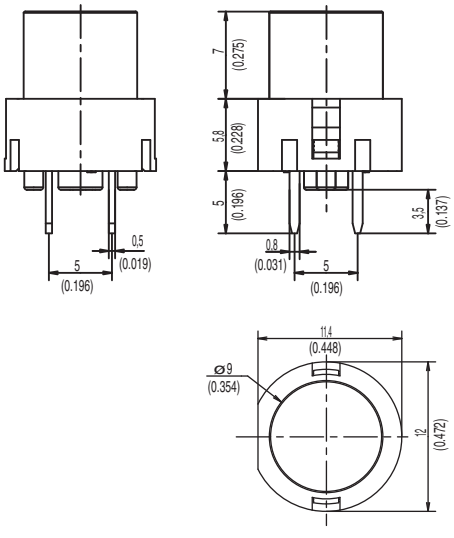

D6L ONLY AVAILABLE IN BLACK

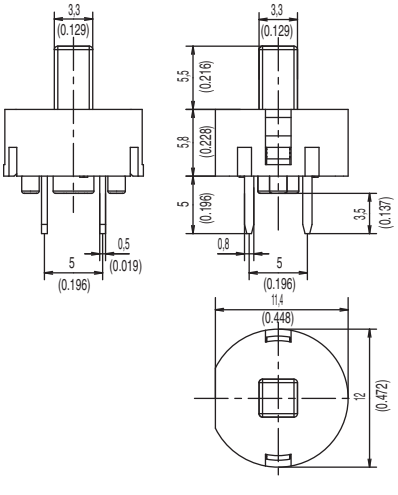

D6F

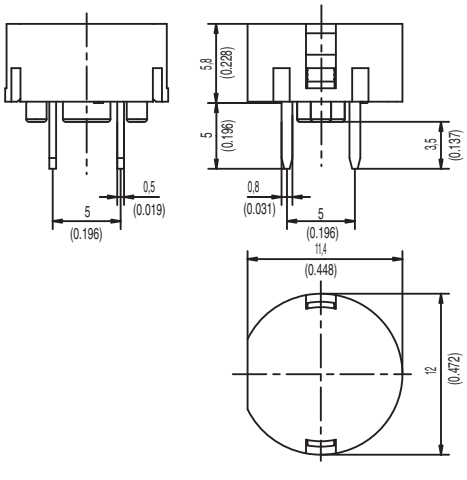

First Angle Projection

Dimensions are shown: mm
Specifications and dimensions subject to change

SWITCH COLORS

OPTION CODE	SWITCH COLOR
00	WHITE
10	GRAY
30	YELLOW
40	RED
50	GREEN
60	BLUE
90	BLACK

PCB LAYOUT

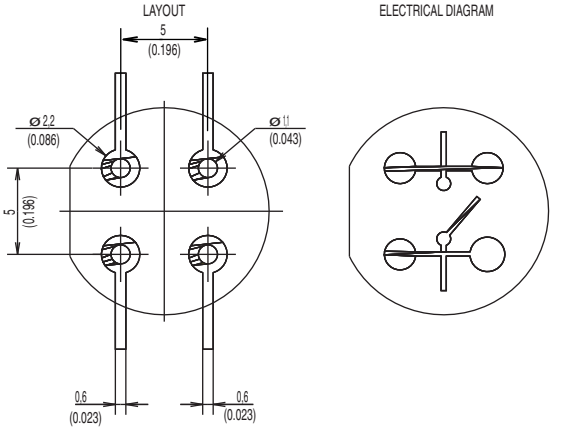

BUTTON AVAILABLE

BTND6 Buttons must be ordered separately. Shipped in bulk.

NOTE: Only compatible with D6C.

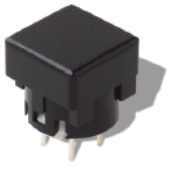

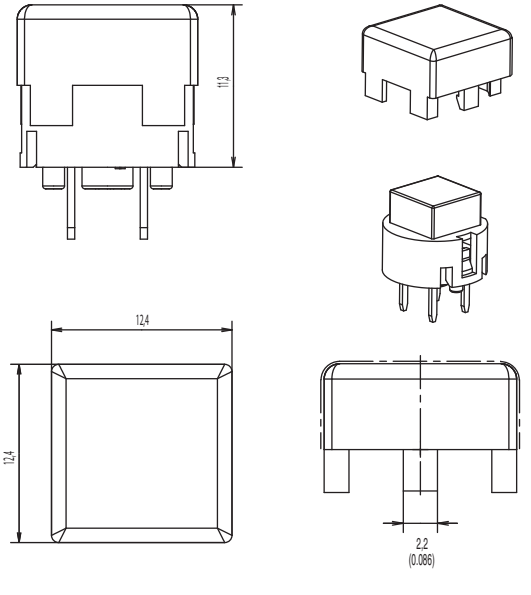

OPTION CODE	BUTTON COLOR
00	WHITE
10	GRAY
30	YELLOW
40	RED
50	GREEN
60	BLUE
90	BLACK

First Angle Projection

Dimensions are shown: mm
Specifications and dimensions subject to change

KS
Single Pole Key Switches

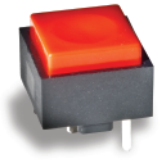

Features/Benefits

- ***Positive tactile feel***
- ***Variety of cap colors***
- ***SPST and SPDT configurations***
- ***RoHS compliant***

Typical Applications

- ***Telecommunications***
- ***Industrial***
- ***Instrumentation***

Specifications

CONTACT RATING: Q contact material: 25mA @ 50V AC .or DC max.
ELECTRICAL LIFE: 100,000 actuations.
CONTACT RESISTANCE: Below 100 mΩ initial @ 2-4 V DC, 100 mA
INSULATION RESISTANCE: 10^9 Ω min.
DIELECTRIC STRENGTH: 1,000 Vrms min. @ sea level.
OPERATING TEMPERATURE: -30˚C to 65˚C.
SOLDERABILITY: Per MIL-STD-202F method 208D, or EIA RS-186E method 9 (1 hour steam aging).

Note: Specifications and materials listed above are for switches with standard options. For information on specific and custom switches, consult Customer Service Center.

Materials

CASE: Glass filled nylon (UL 94V-0).
ACTUATOR: ABS, matte finish, black standard.
MOVABLE CONTACT: Q contact material: Stainless steel, silver plated.
STATIONARY CONTACTS AND TERMINALS: Q contact material: copper alloy, silver plated.
TERMINAL SEAL: Epoxy

How To Order

Our easy build-a-switch concept allows you to mix and match options to create the switch you need. To order, select desired option from each category and place it in the appropriate box.

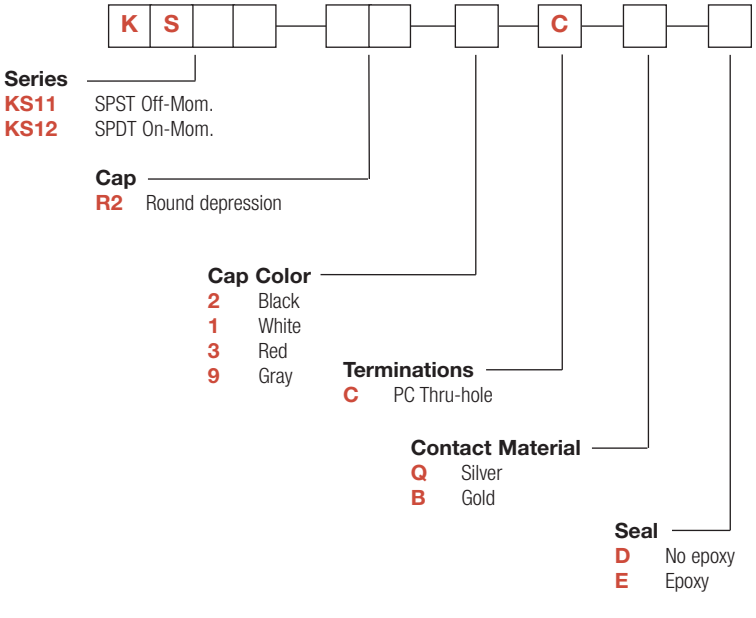

SERIES

KS11 / KS12

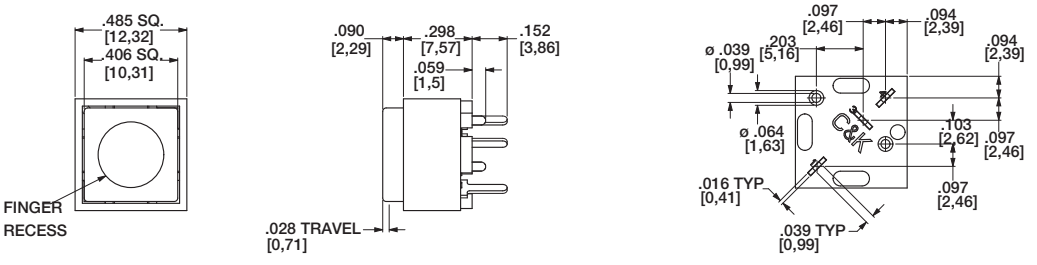

NO. POLES	MODEL NO.	SWITCH FUNCTION POS. 1	SWITCH FUNCTION POS. 2	CONNECTED TERMINALS POS. 1	CONNECTED TERMINALS POS. 2	SCHEMATIC
SP	KS11	OFF	MOM.	OPEN	1–3	SPST 1 3
	KS12	ON	MOM.	1–4	1–3	SPDT 1 (COMM) NC 4 3 NO

CAP

R2 CAP WITH ROUND DEPRESSION

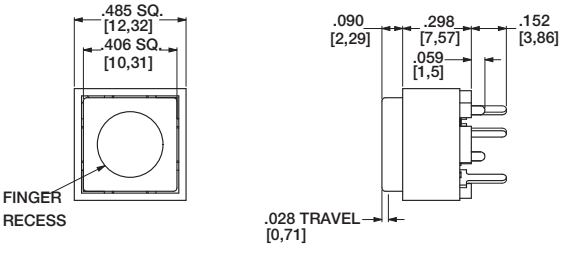

OPTION CODE	CAP COLOR
2	BLACK
1	WHITE
3	RED
9	GRAY

Third Angle Projection

Dimensions are shown: mm
Specifications and dimensions subject to change

KS
Single Pole Key Switches

TERMINATION

C PC THRU-HOLE

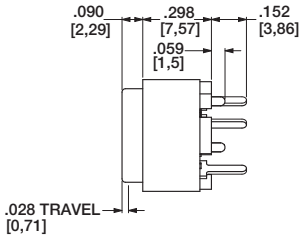

PC MOUNTING

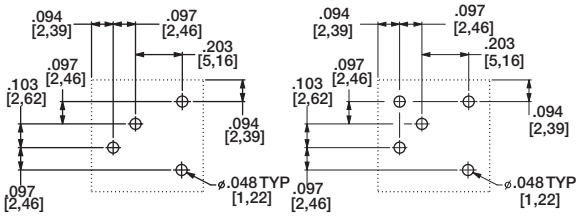

KS11 KS12

MULTIPLE SWITCH SPACING

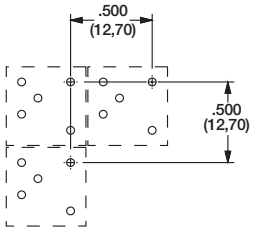

CONTACT MATERIAL

OPTION CODE	CONTACT MATERIAL	TERMINAL PLATING	RATINGS	
Q	SILVER[2]	SILVER[2]	POWER	25 mA MAX. @ 50 V AC OR DC MAX.
B	GOLD[1]	GOLD[1]	LOW LEVEL/DRY CIRCUIT	0.4 VA MAX. @ 20 V AC OR DC MAX.

1) MOVABLE CONTACT: Stainless steel, with gold plate over nickel plate.
STATIONARY CONTACTS & ALL TERMINALS: Copper alloy, with gold plate over nickel plate.

2) MOVABLE CONTACT: Stainless steel, silver plated.
STATIONARY CONTACTS & ALL TERMINALS: Copper alloy, silver plated.

NOTE: Any models supplied with Q or B contact material are RoHS compliant.

SEAL

D NO EPOXY SEAL

E EPOXY SEAL

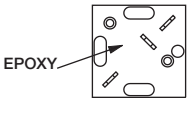

Third Angle Projection

Dimensions are shown: mm
Specifications and dimensions subject to change

Features/Benefits

- *High reliability/long life*
- *Designed for low level switching*
- *Ready to implement on PCB*
- *Latching function available*
- *Several button options*
- *RoHS compliant and compatible*

Typical Applications

- *Medical*
- *Instrumentation*
- *Industrial electronics*
- *Audio electronics*

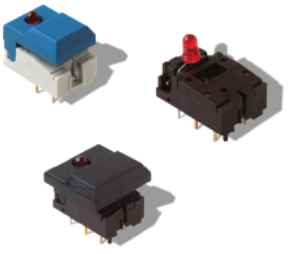

Construction

FUNCTION: momentary or push-push
CONTACT ARRANGEMENT: 1 change over contact SPDT, NO
MODE OF SWITCHING: Non-shorting
DISTANCE BETWEEN BUTTON CENTERS:
HORIZONTAL MINIMUM: 12,7 (0.500) or 17,78 (0.700)
VERTICAL MINIMUM: 17,78 (0.700)
TERMINALS: PC pins
MOUNTING: Soldering, centering pins

Mechanical

TOTAL TRAVEL: ≤ 3 (.0018)
SWITCHING TRAVEL: 1,5 (0.0591)
LATCHING TRAVEL: 1,8 (0.0709)
OPERATING FORCE: 1.5 +/- 0.5 N (150 +/- 50 grams)

Process

SOLDERABILITY:
Wave soldering, compatible with lead free soldering profile
Hand soldering, 350˚C for 3 seconds

Electrical

SWITCHING POWER MAX.: 240 mW DC
SWITCHING VOLTAGE MAX.: 24 V DC
SWITCHING CURRENT MAX.: 10 mA DC
CARRYING CURRENT AT 20˚C (push-push version): 100 mA
DIELECTRIC STRENGTH (50 Hz, 1 min): 500 V
OPERATING LIFE with or without max. switching power
Momentary: ≥ 5 x 10^6 operations
Push-push: ≥ 5 x 10^5 operations
CONTACT RESISTANCE: Initial ≤ 50 mΩ
After 5 x 10^6 operations: ≤ 100 mΩ
INSULATION RESISTANCE: ≥ 10^{10} Ω
CAPACITANCE at f= 10 kHz: ≤ 0.8pF
BOUNCE TIME: ≤ 2.5 ms
Operating speed 400 mm/s (15.75/s)

Environmental

OPERATING TEMPERATURE: -25˚C to 85˚C.

How To Order

Our easy build-a-switch concept allows you to mix and match options to create the switch you need. To order, select desired option from each category and place it in the appropriate box. **Some of the configurations may not be available or could require some development.**

Switch

[ ][ ][ ][ ] – [ ][ ] – [ ][ ] – [ ][ ] – [ ][ ][ ] – [ ][ ] – [A][U] – [ ][ ] – [ ][ ][ ]

Series
SER Narrow button
SET Wide button
SERU Switch body only (no button)

LED
NONE No LED
L 1 LED
2L 2 LED's

Button Color**
None (SERU)
BK Black
GY Gray
WH White
RD Red
BU Blue

1st LED Color***
NONE No LED
RD Red
YE Yellow
GN Green

LED Spacing*
NONE Narrow LED Spacing (TYP Europe)
7.62 Wide LED Spacing (TYP No. America)

2nd LED Color***
NONE No LED
RD Red
YE Yellow
GN Green

Contact Material
AU Gold

Function
EE Latching
OA Non-latching

Body Color
NONE White (STD)
BRN Brown

Reference
SER BK AU OA

Button

[ ][ ] – [K] – [ ][ ] – [ ][ ] – [ ][ ]

Reference
SRK BK

Button Style
SR Narrow
ST Wide

LED Holes
NONE No LED holes
L 1 LED hole
2L 2 LED holes

Button Color**
BK Black
GY Gray
WH White
RD Red
BU Blue

Latching
None For use with momentary switch
EE With "EE" staple for latching

* LED spacing only applies when 1 LED requested
** Additional button colors available by request
*** Additional LED colors available by request including Bi color configurations

Dimensions are shown: mm
Specifications and dimensions subject to change

DIGITAST
Microminiature SPDT, Key Switches

DESIGNATION

SER NARROW BUTTON

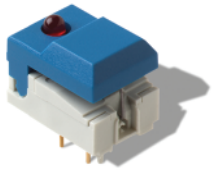

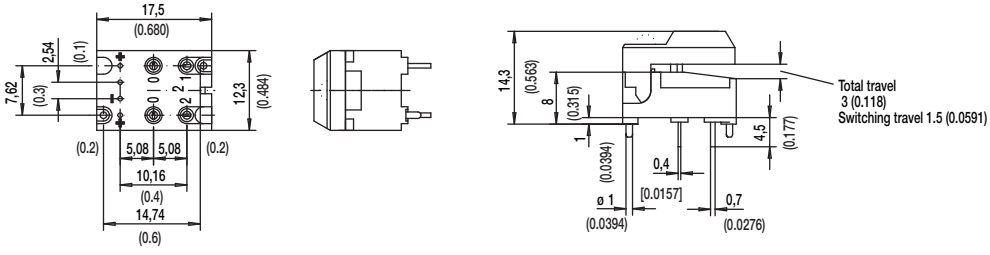

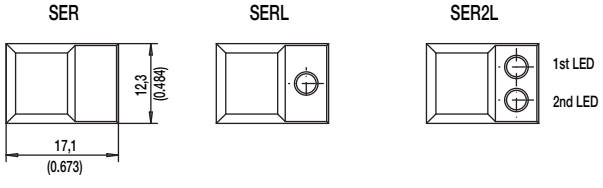

SET WIDE BUTTON

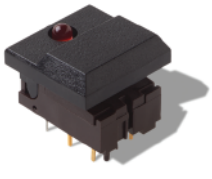

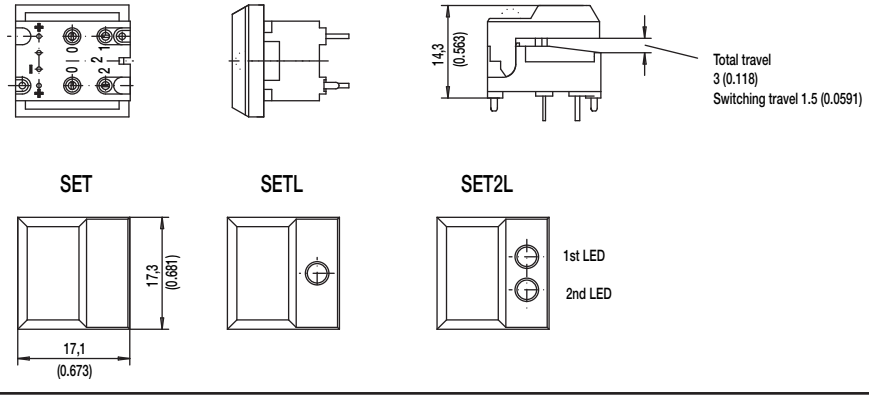

SERU NO BUTTON

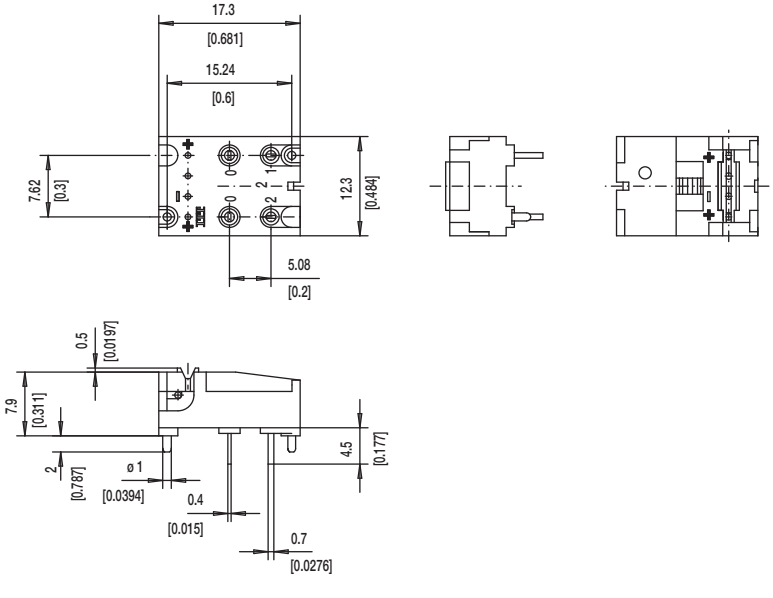

First Angle Projection

Dimensions are shown: mm
Specifications and dimensions subject to change

LED

NONE NO LED

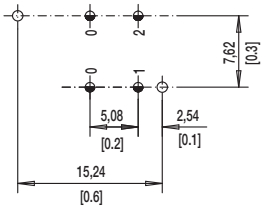

L 1 LEDs

7.62 mm Spacing (TYP No. America)

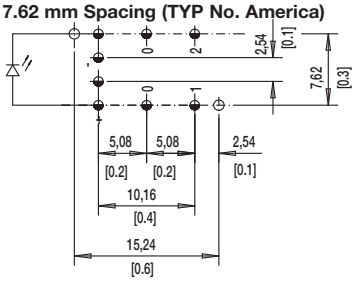

NARROW SPACING (TYP EUROPE)

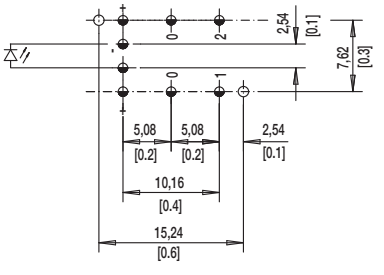

TOP VIEW OF PCB

2L 2 LEDs

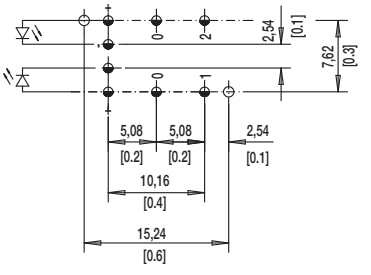

ø 1.0±0.1 (0.0394±0.00349)

ø 1.1±0.05 (0.0433±0.00197)

BUTTON COLOR

BK BLACK

GY GRAY

Other button colors available by request [red (RD), green (GN), white (WH), yellow (YE) , blue (BU) , orange (OG)].

LED COLOR

OPTION CODE	COLOR
NONE	Models without LED
RD	Red
GN	Green
YE	Yellow

CONTACT MATERIAL

OPTION CODE	MATERIAL
AU	Gold

FUNCTION

OPTION CODE	COLOR	SCHEMATIC
OA	Momentary	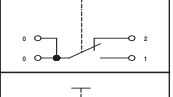
EE	Push-Push	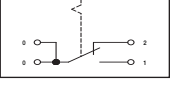

First Angle Projection

Dimensions are shown: mm
Specifications and dimensions subject to change

ED & EDM Domes

Features

- *Short travel*
- *Good tactile feedback*
- *Self cleaning*
- *3 actuation forces*
- *RoHS*

Typical Applications

- *Aircraft*
- *Instrument*
- *Panels*
- *Radio equipment*

Specification

ED: Disc element
EDM: Disc element and double dome
FUNCTION: Momentary action
CONTACT TYPE: Normally open - SPST
TERMINALS: Through hole PCB terminations or Tabs
OPERATING LIFE: 1,000,000

Packaging

Trays 50 pieces.

Electrical

	Silver	Gold
MAXIMUM POWER:	1.0 VA	0.2 VA
MAXIMUM VOLTAGE:	100 VDC	100 VDC
MINIMUM VOLTAGE:	20m VDC	20m VDC
MIN/MAX CURRENT:	1.0 mA - 100 mA	50µA - 50 mA
DIELECTRIC STRENGTH:	≥ 250 Vrms	
CONTACT RESISTANCE:	≤ 100 mΩ	
INSULATION RESISTANCE: (between terminals)	Initial measurement: ≥ 1 GΩ After damp heat: ≥ 10 MΩ	
BOUNCE TIME:	≤ 3 ms	

Environmental

	Silver	Gold
OPERATING TEMPERATURE:	-25˚C to 70˚C	-55˚C to 85˚C

Mechanical

Type	Operating force Newtons (grams)	Tactile Feeling (Δ%)	Return Force N	Travel (mm)
EDSAC LFS	2.4 (240) ± 25%	≥ 30%	≥ 0.4 N	0.3mm ± 0.15
EDSSC LFS	2.4 (240) ± 25%	≥ 30%	≥ 0.4 N	0.3mm ± 0.15
EDM450SAC LFS	4.5 (450) ± 25%	≥ 25%	≥ 1.0 N	0.5mm ± 0.25
EDM650SSC LFS	6.5 (650) ± 25%	≥ 25%	≥ 1.6 N	0.6mm ± 0.25

SIMULTANEITY: ≤ 0.05 mm

How To Order

Our easy build-a-switch concept allows you to mix and match options to create the switch you need. To order, select desired option from each category and place it in the appropriate box.

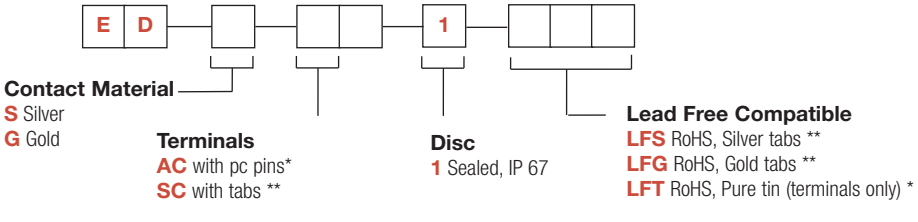

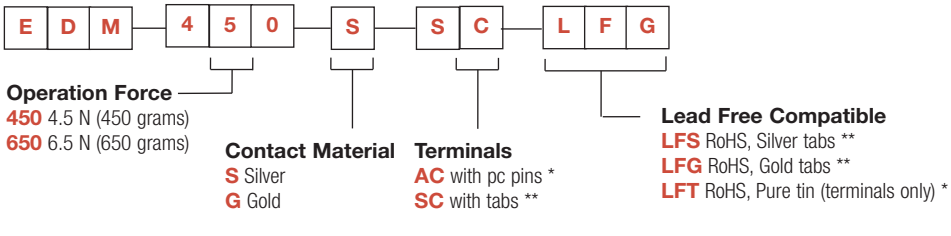

Note
* AC terminals only available with LFT
** SC terminals only available with LFS or LFG

First Angle Projection

Dimensions are shown: mm
Specifications and dimensions subject to change

ED

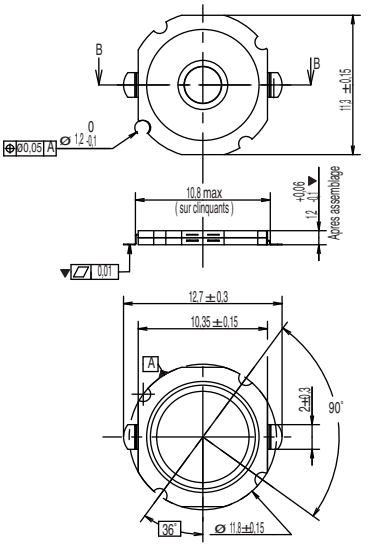

EDM

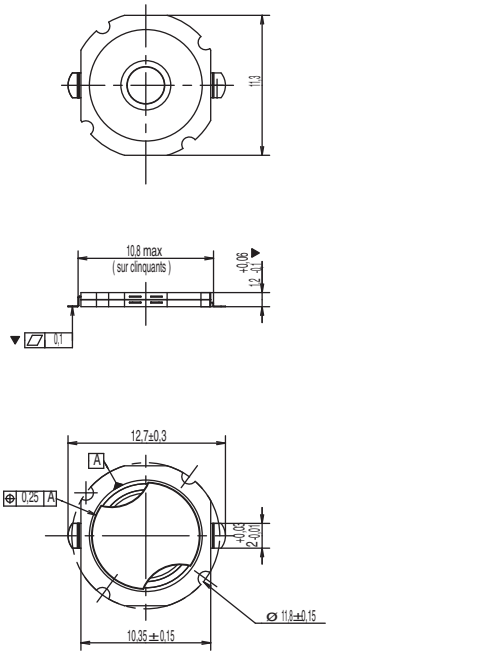

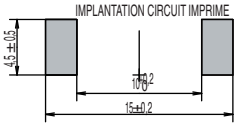

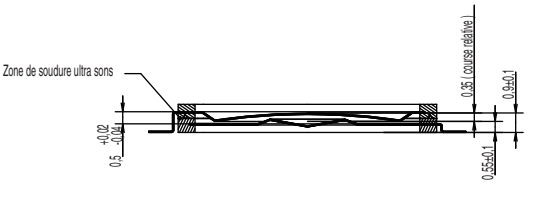

Switch Action Principal

The disc contact is essentially made of two separate conductive dome diaphragms separated by an insulated material.

The upper diaphragm is shaped so that under pressure it collapses suddenly and establishes contact with the lower diaphragm.

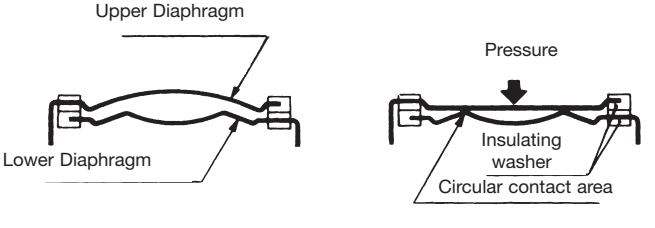

Switch in resting position

Switch in active position

First Angle Projection

Dimensions are shown: mm
Specifications and dimensions subject to change

KBD
Keyboard Switches

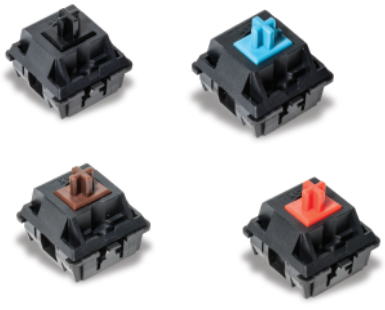

Features

- ***Long operating life***
- ***High reliability***
- ***Excellent ergonomics***
- ***RoHS compliant***

Typical Applications

- ***Gaming keyboard***
- ***Professional keyboard***
- ***Industrial keyboard***
- ***Workstation keyboard***

Specifications

CONTACT ARRANGEMENT: SPST
CONTACT RATING: 10mA @ 12 VDC
INITIAL CONTACT RESISTANCE: 200 m Ω max. (25m Ω typically)
INSULATION RESISTANCE: 100M Ω min. @ 100 VDC
DIELECTRIC STRENGTH: 250 VAC (50-60 Hz) 60 sec.
ELECTRICAL LIFE: 50,000,000 cycles
PRE-TRAVEL: 1.5 ~ 2 mm
OVERTRAVEL: 4 mm
OPERATING TEMPERATURE: -10˚C to +70˚C

Materials

COVER: Nylon (UL94V-0)
HOUSING: Nylon (UL94V-0)
KNOB: POM (UL94HB)
TERMINALS: Copper alloy, gold plated in contact area,
Tin plated in soldering area
SPRING: Stainless steel

How To Order

Our easy build-a-switch concept allows you to mix and match options to create the switch you need. To order, select desired option from each category and place it in the appropriate box.

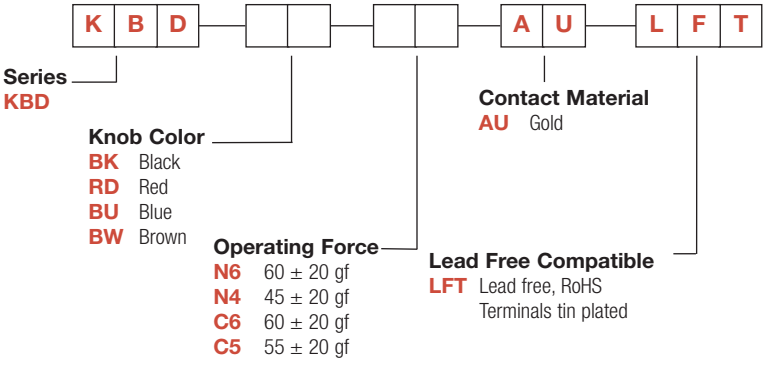

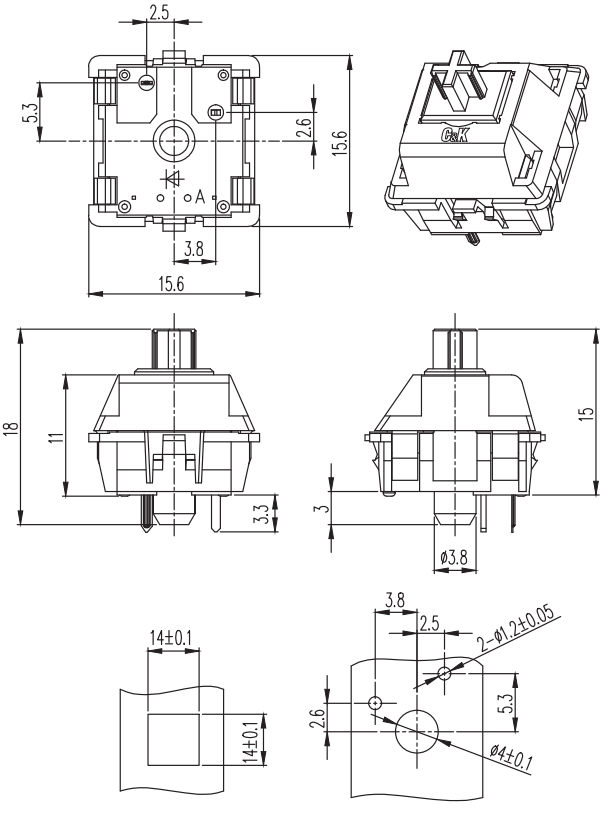

Panel Cut
Panel Thickness 1.2mm

PCB Diagram

PART NUMBER	FEELING	KNOB COLOR	OPERATING FORCE	OPERATING LIFE
KBDBKN6AULFT	Linear actuation	BLACK	60±20gf	50,000,000
KBDRDN4AULFT	Linear actuation	RED	45±20gf	50,000,000
KBDBUC6AULFT	Click pressure point	BLUE	60±20gf	50,000,000
KBDBWC5AULFT	Click pressure point	BROWN	55±20gf	50,000,000

Detect Switches
Product Selection Guide

Detect						
Series	**HDT**	**DS**	**HDS**	**HDP**	**SDP**	**SDS**
Travel to Make (mm)	0,3	See datasheet	0,17	0,24	29,2°	0,35
Overtravel (mm)	0,75	See datasheet	0,5	1,66	39,1°	1,65
Total Travel (mm)	1,05	See datasheet	1,07	1,9	68,3°	2,0
Actuator Length (mm)	1,4	See datasheet	1,17	2,15	1,85	2,5
Life Expectancy	100,000 cycles	20,000; 50,000; 100,000 cycles	100,000 cycles	100,000 cycles	50,000 cycles	50,000 cycles
Contact Type	SPST N.O.	SPST SPDT	SPST N.O.	SPST N.O.	SPDT	SPST N.O. SPST N.C.
Max. Voltage (V)	5	5 V; 16 V 30 V	5	5	5	12
Max. Switching Current (mA)	1 mA	1 mA; 5 mA 100 mA	1 mA	1 mA	1 mA	100 mA
Sealing	No	No	No	No	No	No
Mounting	Surface mount	Thru-hole Solder lug	Surface mount	Surface mount	Surface Mount	Surface mount
Page number	E–4	E–7	E–12	E–14	E–16	E–17

Detect				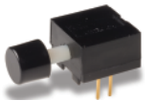		
Series	**DDS**	**MDS**	**KDS**	**KM**	**MPS**	**ZMA**
Travel to Make (mm)	0,45	2,5 max.	1,25 max.	4,06	See datasheet	1,3 max.
Overtravel (mm)	1,95	0,15 min.	8,9	1,78	See datasheet	0,2 min.
Total Travel (mm)	2,4	2,9	10,16	5,84	See datasheet	1,5
Actuator Length (mm)	2,6	R 8,4	10,16	10,11	N/A	
Life Expectancy	50,000 cycles	100,000 cycles	10,000 cycles	10,000 cycles	10,000,000 cycles	300,000 cycles
Contact Type	SPST N.O.	SPDT	SPST N.O. SPST N.C.	SPDT	SPST N.O.	SPDT
Max. Voltage (V)	30	30	20	125 V AC	30	125 V
Max. Switching Current (mA)	100 mA	300 mA	.4 VA	250 mA	300 mA	3 Amps
Sealing	No	No	No	Flux tight	Yes	No
Mounting	Thru-hole	Thru-hole & Surface Mount	Snap-in panel	Thru-hole	Wire lead	Thru-hole
Page Number	E–18	E–20	E–26	E–27	E–30	E–32

Detect						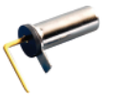
Series	**KSU**	**KSR2D**	**KSM**	**KSC4D**	**KSJ**	**RB**
Travel to Make (mm)	0,5	0,3	0,3	0,6	0,3	See datasheet
Overtravel (mm)	1,0	N/A	1,15	N/A	0,75	N/A
Total Travel (mm)	1,5	0,3	1,72	0,6	1,05	N/A
Actuator Length (mm)	1,5	0,8	1,8	2,6	1,4	N/A
Life Expectancy	100,000 cycles	100,000 cycles	50,000 cycles	500,000 and 2,000,000 cycles	100,000 cycles	20,000; 100,000 cycles
Contact Type	SPST N.O.	SPST N.O.	SPST N.C.	SPST N.O.	SPST N.O.	SPST SPDT
Max. Voltage (V)	32	32	32	32	5	5 V; 24 V
Max. Switching Current (mA)	50 mA	10 mA	50 mA	50 mA	1 mA	1 mA; 25 mA
Sealing	Dust and water drop proof	Dust and flux tight	Flux tight	IP67	IP60	No
Mounting	Surface mount	Surface mount	Surface mount	Surface mount	Surface mount	Thru-hole
Page number	E–36	E–38	E–40	E–42	E–44	E–46

HDT Series
Micro Mini Surface Mount Detect Switches

Features/Benefits

- ***Low profile package***
- ***Design allows top or side actuation***
- ***Low actuation force, 35 grams max.***
- ***Pick and place compatible, available in tape & reel packaging***
- ***RoHS compliant and compatible***
- ***Halogen free***

Typical Applications

- ***Consumer electronics***
- ***Computers***
- ***Medical devices***
- ***ATCA and MicroTCA devices***

Specifications

CONTACT RATING: 1 mA 5 VDC

MECHANICAL AND ELECTRICAL LIFE: 100,000 cycles min.

CONTACT RESISTANCE: 500 m Ω max. initial.

INSULATION RESISTANCE: 100 M Ω min. between adjacent contacts.

OPERATING TEMPERATURE: -40ºC to + 85ºC

STORAGE TEMPERATURE: -40ºC to + 85ºC

PACKAGING: Tape & reel

Materials

BASE: PA 46 (UL94V-0)

COVER: PA 46 (UL94V-0)

ACTUATOR: PA 46 (UL94V-0)

MOVABLE BLADE: Stainless Steel, Ag over Ni plating.

TERMINALS: Phosphor Bronze, Ag over Ni plating.

SOLDERABILITY: Lead free compatible - No clean.

NOTE: Specifications and materials listed above are for switches with standard options. For information on specific and custom switches, consult Customer Service Center.

Build-A-Switch

Complete part numbers for HDT Series are shown below.

PART NUMBER	PACKAGING	SCHEMATIC
HDT0001	TAPE & REEL 2,450 per reel	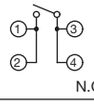 N.O.

NOTE: Available with no locating posts by adding "NP" (HDT0001NP) to Part Number.

TRAVEL:

Pre-travel	.30 mm
Overtravel:	.75 mm
Total:	1.05 mm

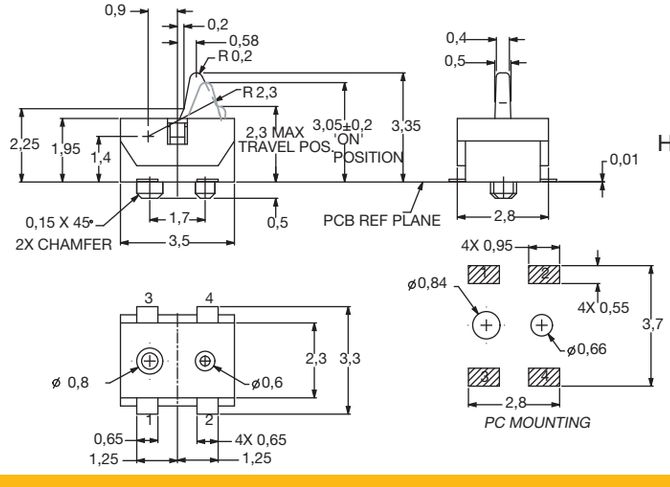

HDT0001

TAPE & REEL

HDT0001

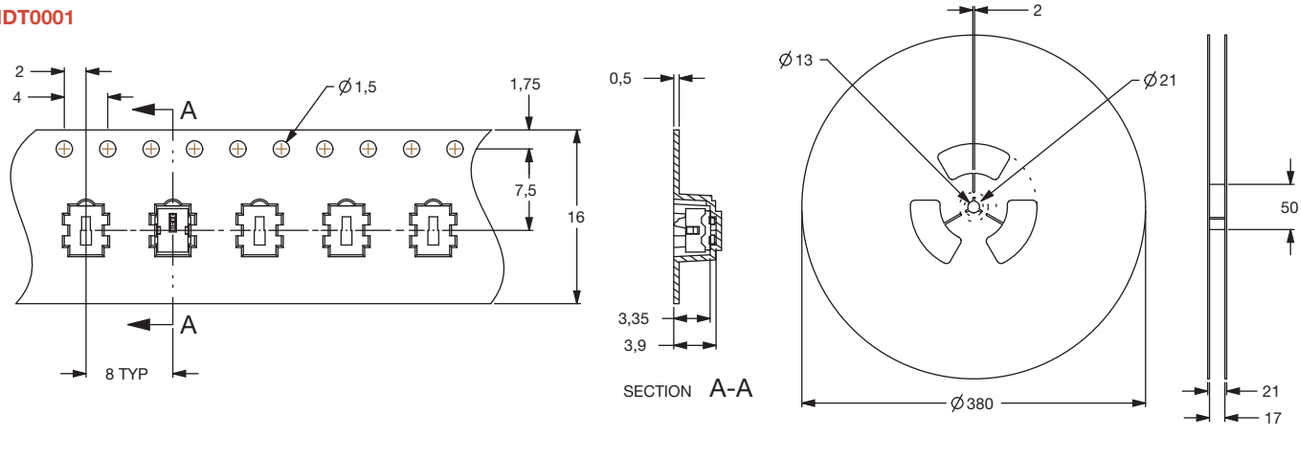

Third Angle Projection

Dimensions are shown: mm

Specifications and dimensions subject to change

HDT0004

HDT0004

PART NUMBER	PACKAGING	SCHEMATIC
HDT0004	TAPE & REEL 2,800 per reel	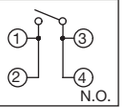

TRAVEL:

Pre-travel .3 mm

Overtravel: 1.0 mm

Total: 1.3 mm

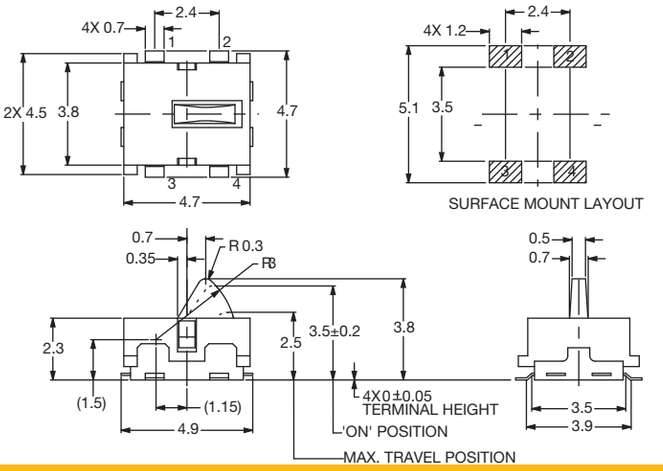

TAPE & REEL

HDT0004

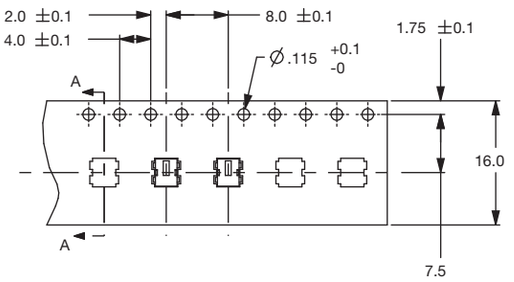

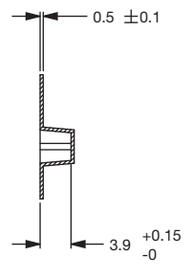

SECTION A-A

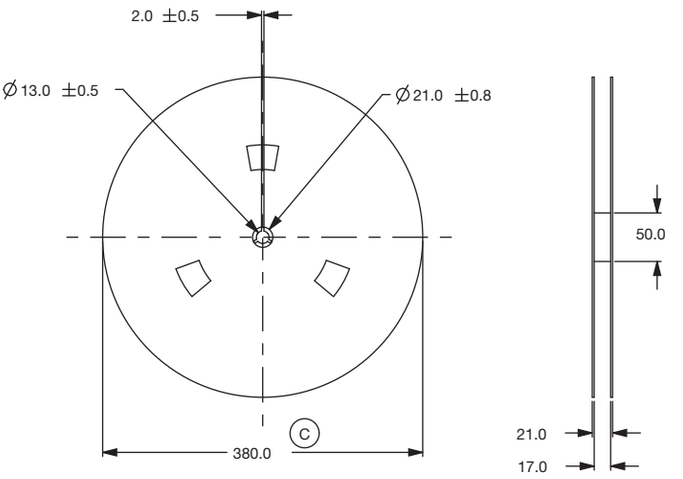

REEL

HDT0104

HDT0104

PART NUMBER	PACKAGING	SCHEMATIC
HDT0104	TAPE & REEL 2,500 per reel	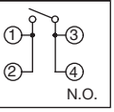

TRAVEL:

Pre-travel: .3 mm

Overtravel: 1.1 mm

Total: 1.4 mm

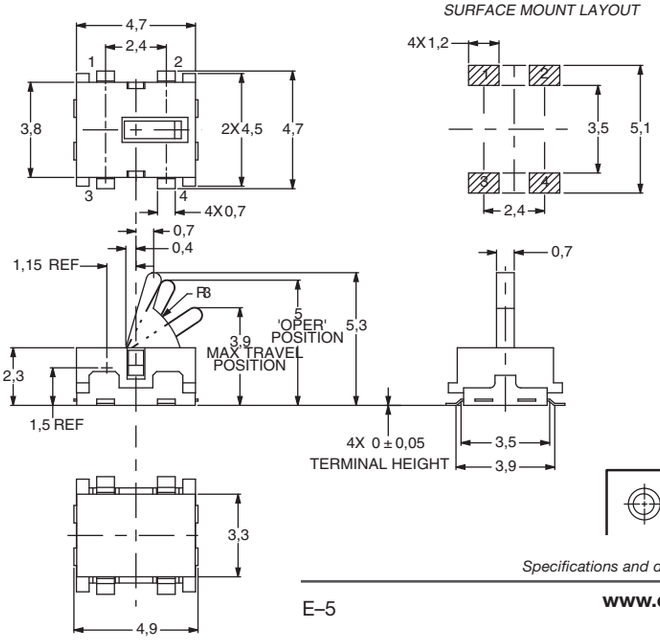

Third Angle Projection

Dimensions are shown: mm

Specifications and dimensions subject to change

HDT Series
Micro Mini Surface Mount Detect Switches

TAPE & REEL

HDT0104

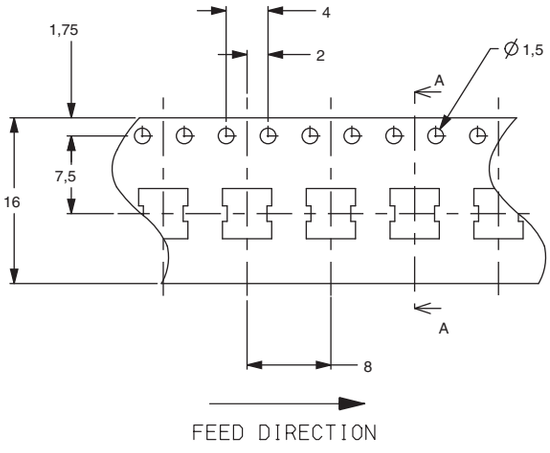

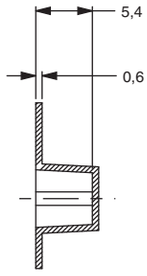

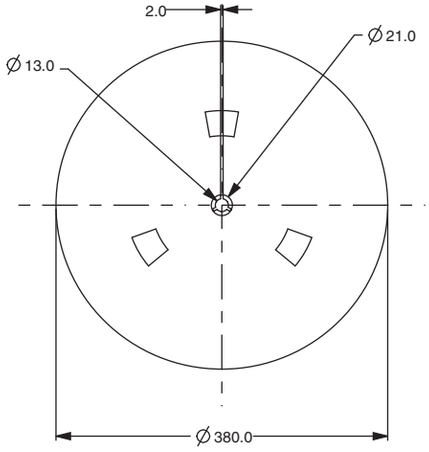

HDT0204

HDT0204

PART NUMBER	PACKAGING	SCHEMATIC
HDT0204	TAPE & REEL 1,400 per reel	① ③ ② ④ N.O.

TRAVEL:

Pre-travel: .3 mm

Overtravel: 1.1 mm

Total: 1.4 mm

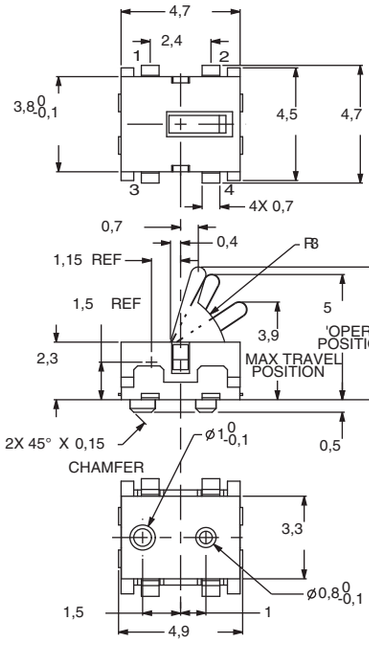

SURFACE MOUNT LAYOUT

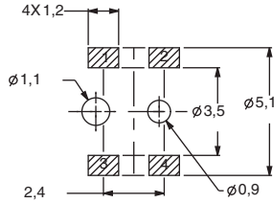

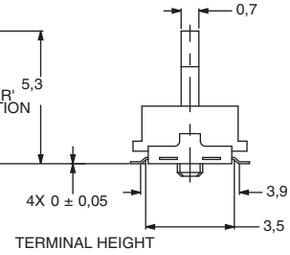

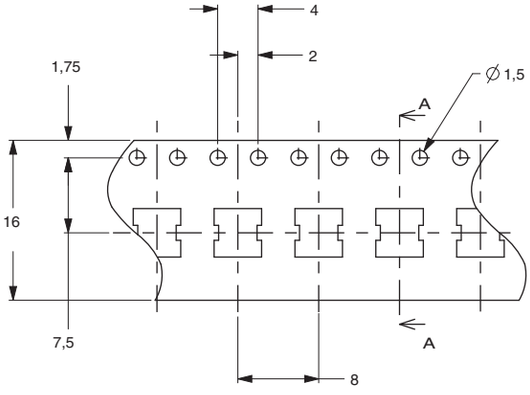

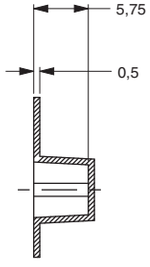

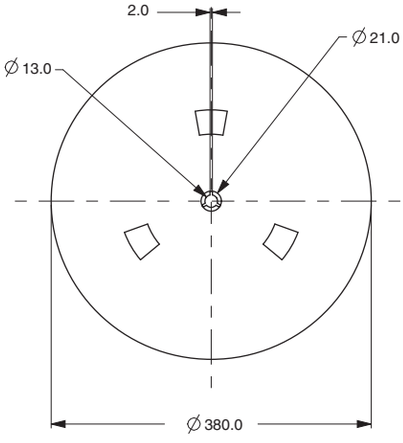

Features/Benefits

- *Compact design*
- *Low actuation force*
- *Detect mechanical movement*
- *Left and right options*
- *Right angle options*

Typical Applications

- *Computer peripherals*
- *Office equipment*
- *Consumer electronics*
- *Appliances*
- *Audio and visual equipment*

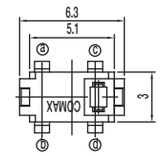

PART NUMBER	PACKAGING	SCHEMATIC
DS-02005	1,000 pieces	1P - 1T 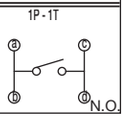

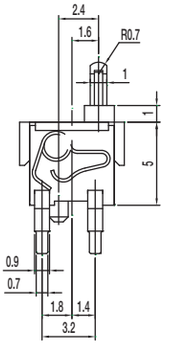

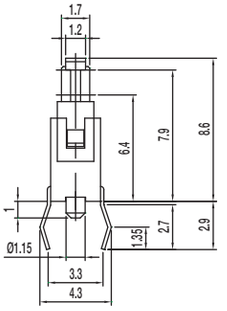

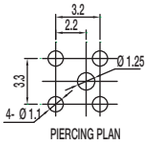

Specifications

CONTACT ARRANGEMENT: SPST, NO
CONTACT RATING: 100mA @ 30 VDC
OPERATING LIFE: 50,000 cycles
OPERATING FORCE: 50 gf max.
PRE-TRAVEL: 0.7 mm
TOTAL TRAVEL: 2.6 mm
INITIAL CONTACT RESISTANCE: 1 Ω max.
INSULATION RESISTANCE: 100 M Ω min. @ 100 VDC 60 sec.
DIELECTRIC STRENGTH: 100 V AC (50-60Hz) 60 sec.
OPERATING TEMPERATURE: –20°C to +70°C.

Materials

KNOB: PA
COVER: PA
SPRING: Gold plated, copper alloy
HOUSING: PA
TERMINAL: Silver plated, copper alloy

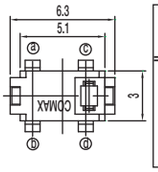

PART NUMBER	PACKAGING	SCHEMATIC
DS-02005 (30)	1,000 pieces	1P - 1T 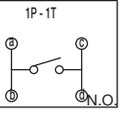

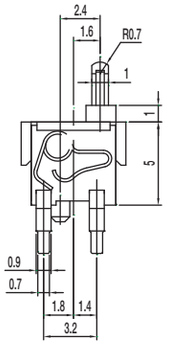

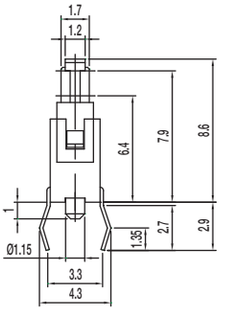

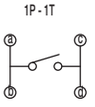

SCHEMATIC

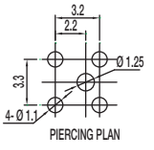

PIERCING PLAN

Specifications

CONTACT ARRANGEMENT: SPST, NO
CONTACT RATING: 100mA @ 30 VDC
OPERATING LIFE: 50,000 cycles
OPERATING FORCE: 30 gf max.
PRE-TRAVEL: 0.7 mm
TOTAL TRAVEL: 2.2 mm
INITIAL CONTACT RESISTANCE: 1 Ω max.
INSULATION RESISTANCE: 100 M Ω min. @ 100 VDC 60 sec.
DIELECTRIC STRENGTH: 100 V AC (50-60Hz) 60 sec.
OPERATING TEMPERATURE: –20°C to +70°C.

Materials

KNOB: PA
COVER: PA
SPRING: Gold plated, copper alloy
HOUSING: PA
TERMINAL: Silver plated, copper alloy

DS Series
Detect Switch

PART NUMBER	PACKAGING	SCHEMATIC
DS-02005-A	1,000 pieces	1P - 1T N.O.

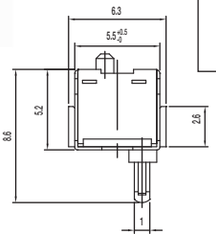

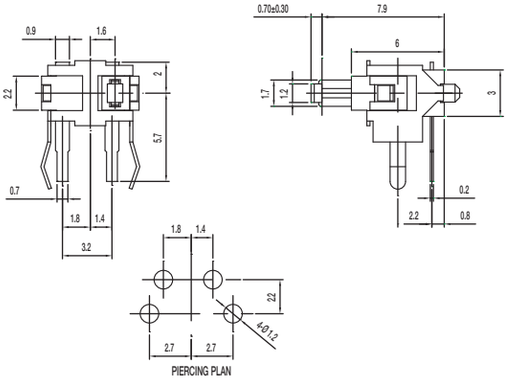

Specifications

CONTACT ARRANGEMENT: SPST, NO
CONTACT RATING: 100mA @ 30 VDC
OPERATING LIFE: 50,000 cycles
OPERATING FORCE: 50 gf max.
PRE-TRAVEL: 0.7 mm
TOTAL TRAVEL: 2.6 mm
INITIAL CONTACT RESISTANCE: 1 Ω max.
INSULATION RESISTANCE: 100 M Ω min. @ 100 VDC 60 sec.
DIELECTRIC STRENGTH: 100 V AC (50-60Hz) 60 sec.
OPERATING TEMPERATURE: –20ºC to +70ºC.

Materials

KNOB: PA
COVER: PA
SPRING: Gold plated, copper alloy
HOUSING: PA
TERMINAL: Silver plated, copper alloy

PART NUMBER	PACKAGING	SCHEMATIC
DS-21805	2,500 pieces	N.O.

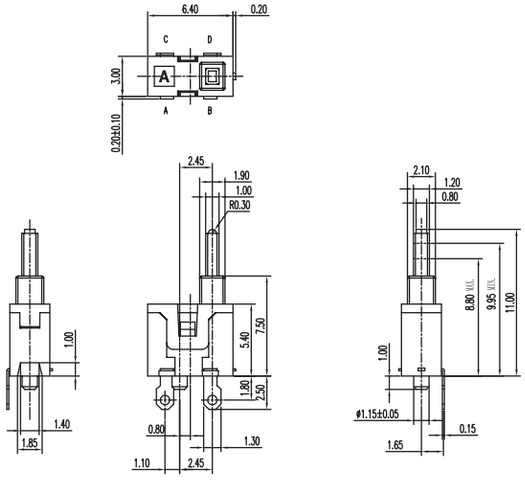

Specifications

CONTACT ARRANGEMENT: SPDT
CONTACT RATING: 5mA @ 5 VDC
OPERATING LIFE: 100,000 cycles
OPERATING FORCE: 36 gf
TOTAL TRAVEL: 2.20 mm
INITIAL CONTACT RESISTANCE: 1 Ω max.
INSULATION RESISTANCE: 100 M Ω min. @ 100 VDC 60 sec.
DIELECTRIC STRENGTH: 100 V AC (50-60Hz) 60 sec.
OPERATING TEMPERATURE: –20ºC to +70ºC.

Materials

KNOB: POM
COVER: PA46
SPRING: Silver plated
HOUSING: PPS
TERMINAL: Silver plated

PART NUMBER	PACKAGING	SCHEMATIC
DS-203-A	2,500 pieces	1P - 1T 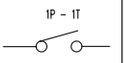 N.O.

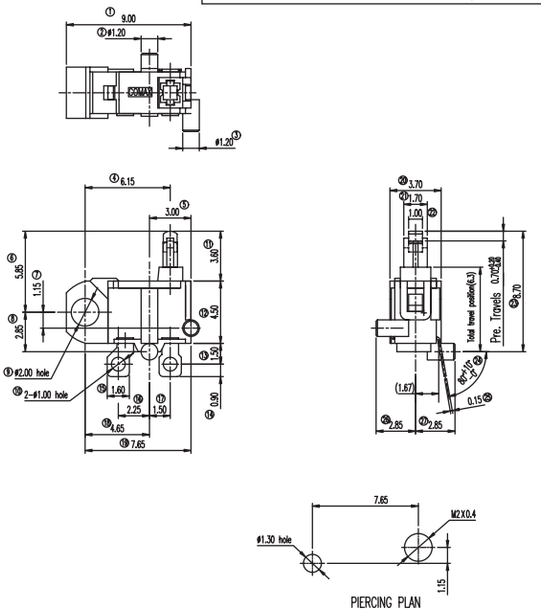

Specifications

CONTACT ARRANGEMENT: SPST
CONTACT RATING: 100mA @ 30 VDC
OPERATING LIFE: 50,000 cycles
OPERATING FORCE: 36 gf
PRE TRAVEL: 0.70 +0.20/-0.40 mm
INITIAL CONTACT RESISTANCE: 1 Ω max.
INSULATION RESISTANCE: 50 M Ω min. @ 250 VDC 60 sec.
DIELECTRIC STRENGTH: 250 V AC (50-60Hz) 60 sec.
OPERATING TEMPERATURE: –20ºC to +70ºC.

Materials

KNOB: POM
COVER: PA
SPRING: Gold plated
HOUSING: PA
TERMINAL: Silver plated

PART NUMBER	PACKAGING	SCHEMATIC
DS-040-02	1,000 pieces	1P - 1T 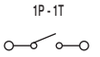 N.O.

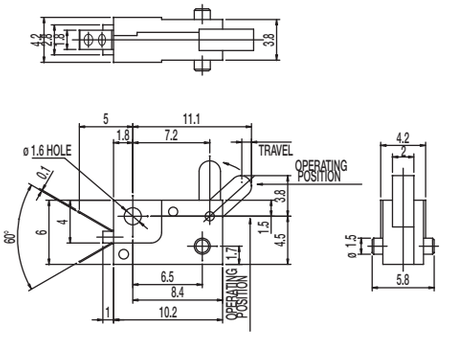

Specifications

CONTACT ARRANGEMENT: SPST, NO
CONTACT RATING: 0.1A @ 16 VDC
OPERATING LIFE: 20,000 cycles
OPERATING FORCE: 30 ± 15 gf
TRAVEL: 0.90 ± 0.20 mm
INITIAL CONTACT RESISTANCE: 40 m Ω max.
INSULATION RESISTANCE: 100 M Ω min. @ 250 VDC 60 sec.
DIELECTRIC STRENGTH: 250 V AC (50-60Hz) 60 sec.
OPERATING TEMPERATURE: –20ºC to +70ºC.

Materials

LEVER: POM
CASE: PBT
COVER: PC

DS Series
Detect Switch

PART NUMBER	PACKAGING	SCHEMATIC
DS-080	1,000 pieces	1P – 2T 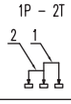 N.O.

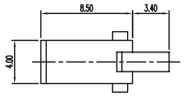

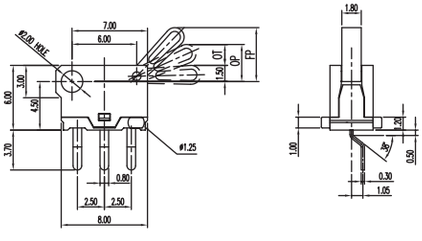

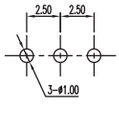

PIERCING PLAN

Specifications

CONTACT ARRANGEMENT: SPDT
CONTACT RATING: 100mA @ 30 VDC
OPERATING LIFE: 20,000 cycles
OPERATING FORCE: 30 ± 20 gf
OVER TRAVEL: 2.0 ± 0.40 mm
INITIAL CONTACT RESISTANCE: 200 m Ω max.
INSULATION RESISTANCE: 10 M Ω min. @ 250 VDC 60 sec.
DIELECTRIC STRENGTH: 250 V AC (50-60Hz) 60 sec.
OPERATING TEMPERATURE: –20ºC to +70ºC.

Materials

KNOB: POM
COVER: PA46
SLIDER: PBT
HOUSING: PA46
TERMINAL: Silver plated

PART NUMBER	PACKAGING	SCHEMATIC
DS-080-C PA	1,000 pieces	1P - 2T N.O.

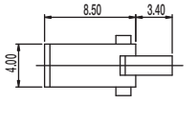

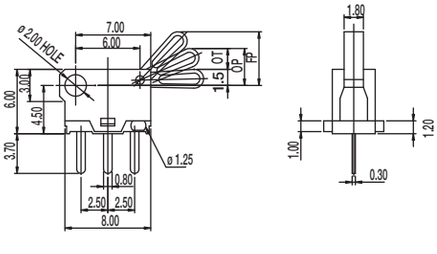

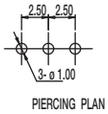

PIERCING PLAN

Specifications

CONTACT ARRANGEMENT: SPDT
CONTACT RATING: 100mA @ 30 VDC
OPERATING LIFE: 20,000 cycles
OPERATING FORCE: 30 ± 20 gf
OVER TRAVEL: 2.0 ± 0.40 mm
INITIAL CONTACT RESISTANCE: 200 m Ω max.
INSULATION RESISTANCE: 10 M Ω min. @ 250 VDC 60 sec.
DIELECTRIC STRENGTH: 250 V AC (50-60Hz) 60 sec.
OPERATING TEMPERATURE: –20ºC to +70ºC.

Materials

KNOB: POM
COVER: PA46
SLIDER: PBT
HOUSING: PA46
TERMINAL: Silver plated

PART NUMBER	PACKAGING	SCHEMATIC
DS-09005-02 BK	500 pieces	Ⓐ→ ⊸ Ⓑ N.O.

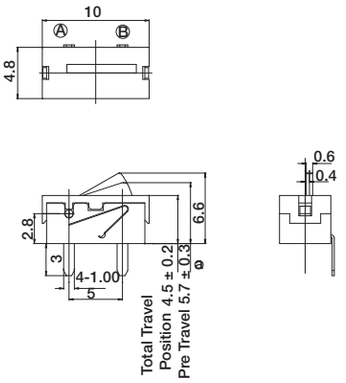

Specifications

CONTACT ARRANGEMENT: SPST
CONTACT RATING: 1mA @ 5 VDC
OPERATING LIFE: 100,000 cycles
OPERATING FORCE: 50 gf max.
TOTAL TRAVEL: 4.5±0.2 mm
INITIAL CONTACT RESISTANCE: 500 m Ω max.
INSULATION RESISTANCE: 100 M Ω min. @ 500 VDC 60 sec.
DIELECTRIC STRENGTH: 500 V AC (50-60Hz) 60 sec.
OPERATING TEMPERATURE: –20°C to +70°C.

Materials

LEVER: POM
COVER: PA
HOUSING: PA
TERMINAL: Silver plated

PART NUMBER	PACKAGING	SCHEMATIC
DS-09005-02 RP	500 pieces	Ⓐ→ ⊸ Ⓑ N.O.

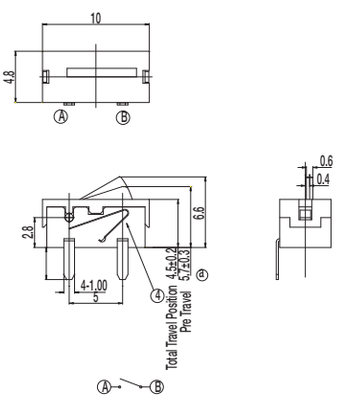

Specifications

CONTACT ARRANGEMENT: SPST
CONTACT RATING: 1mA @ 5 VDC
OPERATING LIFE: 100,000 cycles
OPERATING FORCE: 50 gf max.
TOTAL TRAVEL: 4.5±0.2 mm
INITIAL CONTACT RESISTANCE: 500 m Ω max.
INSULATION RESISTANCE: 100 M Ω min. @ 500 VDC 60 sec.
DIELECTRIC STRENGTH: 500 V AC (50-60Hz) 60 sec.
OPERATING TEMPERATURE: –20°C to +70°C.

Materials

LEVER: POM
COVER: PA
HOUSING: PA
TERMINAL: Silver plated

HDS Series
Micro Mini Side Actuated Surface Mount Detect Switches

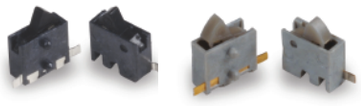

Features/Benefits

- ***Low profile package sits just 1.4 mm off PCB***
- ***Design allows top or side actuation***
- ***Right and left options available***
- ***Low actuation force, 30 grams max.***
- ***Pick and place compatible, available in tape & reel packaging***
- ***RoHS compliant and compatible***

Typical Applications

- ***Consumer electronics***
- ***Computers***
- ***Medical devices***
- ***Mobile Communications***
- ***ATCA and MicroTCA devices***

Specifications

CONTACT RATING: 1 mA 5 VDC

MECHANICAL AND ELECTRICAL LIFE: 100,000 cycles min.

CONTACT RESISTANCE: 1 Ω max. initial.

INSULATION RESISTANCE: 100 M Ω min. between adjacent contacts.

OPERATING TEMPERATURE: -40ºC to + 80ºC

STORAGE TEMPERATURE: -40ºC to + 80ºC

PACKAGING: tape & reel; 5,000 per reel.

TRAVEL:

Pre-travel .17 mm min.

Overtravel: .5 mm min.

Total: 1.07 mm

Materials

BASE: LCP HDS001L: Gray HDS001R: Black

COVER: PA 46 (UL94V-0)

ACTUATOR: PA 46 (UL94V-0) HDS001L: Gray HDS001R: Black

MOVABLE BLADE: Stainless Steel, Ag over Ni plating.

TERMINALS: Phosphor Bronze, Ag plating.

NOTE: Specifications and materials listed above are for switches with standard options. For information on specific and custom switches, consult Customer Service Center.

Build-A-Switch

Complete part numbers for HDS Series are shown below.

PART NUMBER	PACKAGING	SCHEMATIC
HDS001R	TAPE & REEL	N.O.

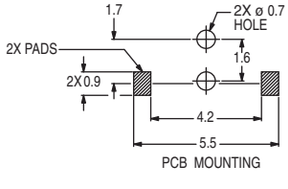

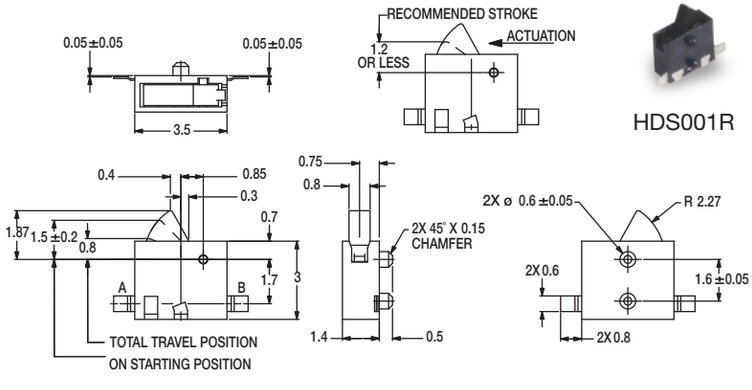

PART NUMBER	PACKAGING	SCHEMATIC
HDS001L	TAPE & REEL	N.O.

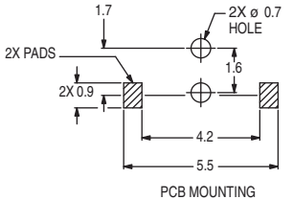

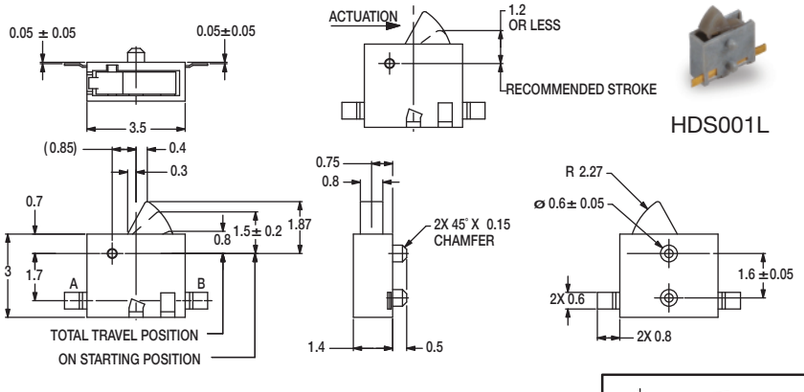

Third Angle Projection

Dimensions are shown: mm

Specifications and dimensions subject to change

TAPE & REEL

HDS001R

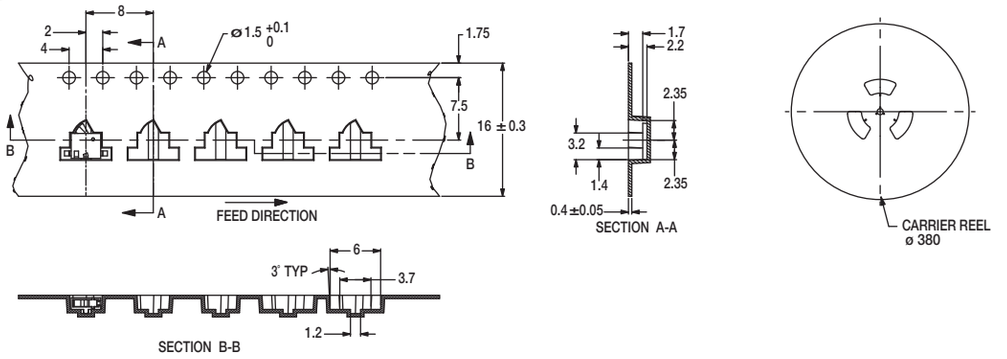

HDS001L

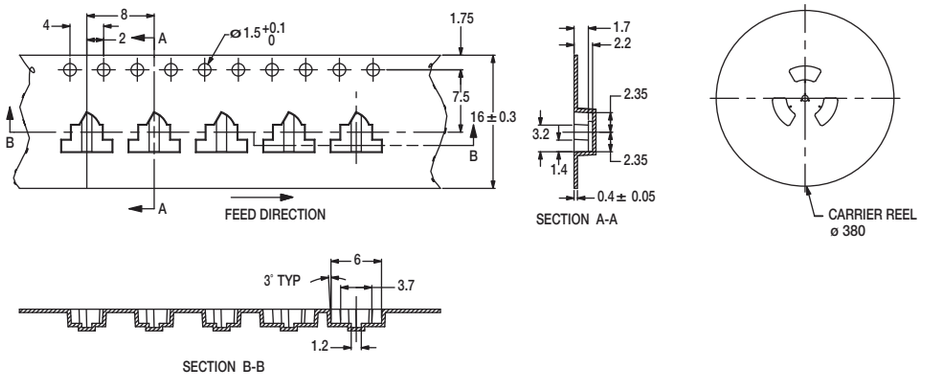

NOTE: Quantity per reel: 5,000 pieces

Third Angle Projection

Dimensions are shown: mm
Specifications and dimensions subject to change

HDP Series
Micro Mini Side Actuated Surface Mount Detect Switches

Features/Benefits

- ***Low profile***
- ***Side actuation***
- ***Right and left options available***
- ***Low actuation force***
- ***Lead free and halogen free***

Typical Applications

- ***Consumer electronics***
- ***Computers***
- ***Medical devices***
- ***Mobile Communications***
- ***ATCA and MicroTCA devices***

Specifications

CONTACT RATING: 1 mA 5 VDC
MECHANICAL AND ELECTRICAL LIFE: 100,000 cycles min.
CONTACT RESISTANCE: < 500 m Ω initial.
INSULATION RESISTANCE: > 100 M Ω
OPERATING TEMPERATURE: -20ºC to + 70ºC
STORAGE TEMPERATURE: -30ºC to + 80ºC
PACKAGING: tape & reel; 2,500 per reel.
TRAVEL:

Pre-travel	0.15 mm min.
"ON" starting position	2.96 +/- 0.25 mm
Total:	1.3 mm
Mechanical:	1.9 mm

Materials

BASE: PA 46 (UL94HB) - halogen free
ACTUATOR: PA 46 (UL94HB) - halogen free
HDP001R - black body/actuator
HDP001L - grey body/actuator
MOVABLE CONTACTS: Stainless Steel, Silver over nickel plate.
FIXED CONTACTS/TERMINALS: Phosphor Bronze, Silver plate.

NOTE: Specifications and materials listed above are for switches with standard options. For information on specific and custom switches, consult Customer Service Center.

Build-A-Switch

Complete part numbers for HDP Series are shown below.

PART NUMBER	PACKAGING	SCHEMATIC
HDP001R Black body/ actuator	TAPE & REEL	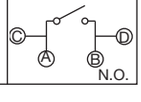

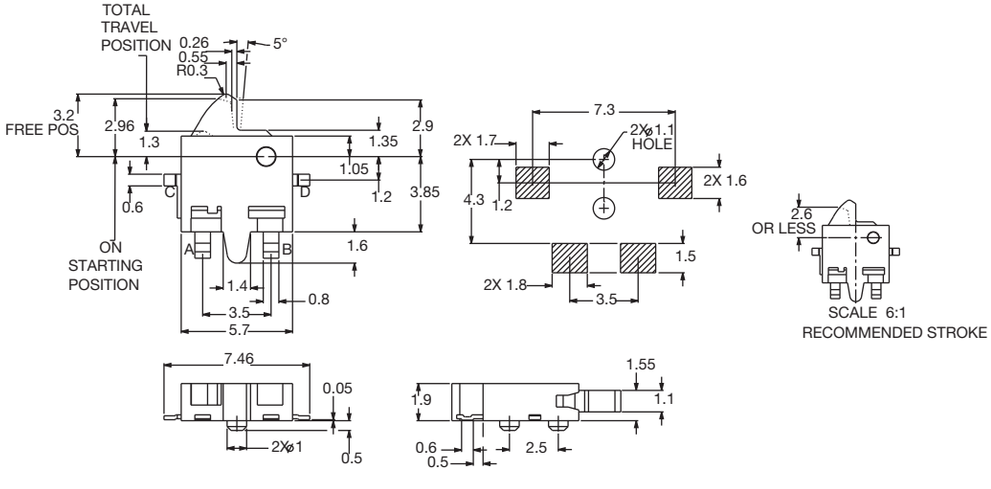

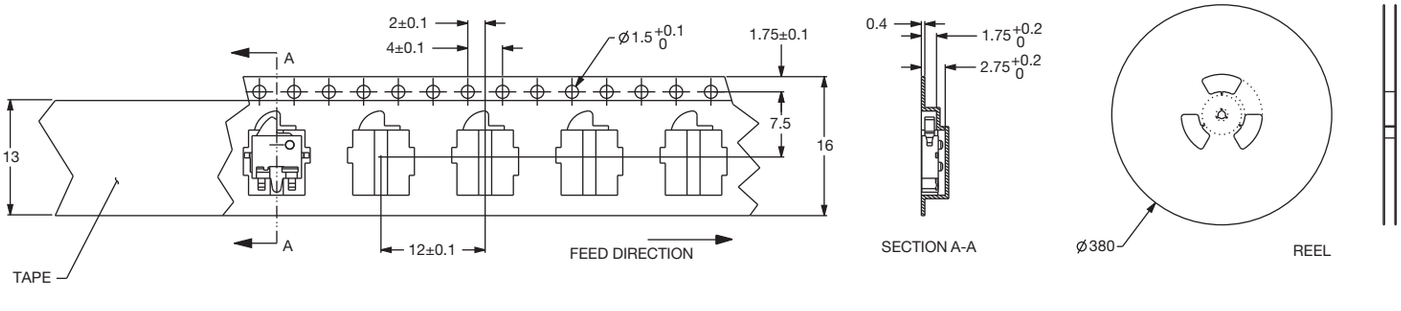

Detect E

Dimensions are shown: mm
Specifications and dimensions subject to change

PART NUMBER	PACKAGING	SCHEMATIC
HDP001L Grey body/ actuator	TAPE & REEL	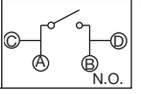

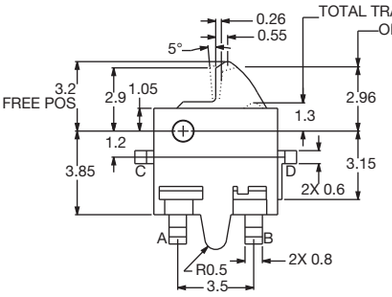

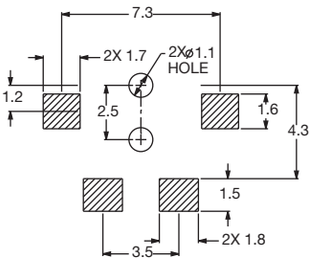

PCB RECOMMENDED

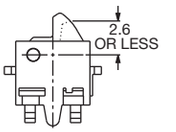

SCALE 6:1
RECOMMENDED STROKE

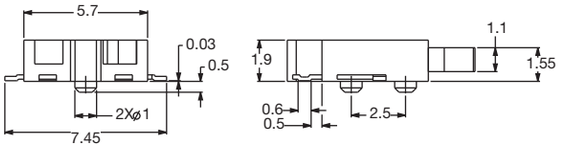

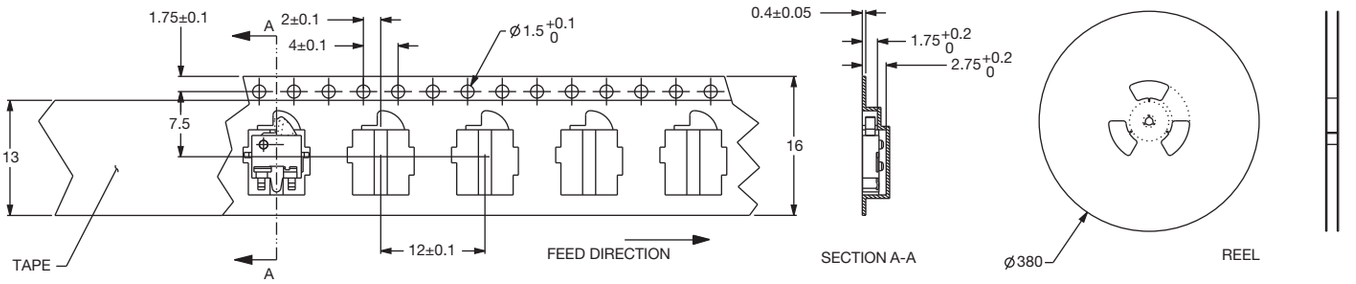

E

Detect

SDP Series
Micro Mini Pendulum SMT Detect Switch

Features/Benefits

- ***SMT process compatible***
- ***Low profile***
- ***Right or left side actuated***
- ***Low actuation force***
- ***Low halogen / halogen free***

Typical Applications

- ***Consumer electronics***
- ***Computers***
- ***Medical devices***
- ***ATCA and MicroTCA devices***

Specifications

CONTACT RATING: 5 VDC 1mA (0.1mA to 100mA max)
MECHANICAL AND ELECTRICAL LIFE: 50,000 cycles
CONTACT RESISTANCE: 500 m Ω max. initial.
INSULATION RESISTANCE: 100 M Ω (500VDC for 1 min.)
OPERATING TEMPERATURE: -20°C to + 70°C
STORAGE TEMPERATURE: -30°C to + 80°C
PACKAGING: Tape & reel 4,550 pieces

Materials

BASE: LCP (black)
COVER: PA 46 (black)
ACTUATOR: LCP (black)
MOVABLE BLADE: Stainless Steel, Ag over Ni plating.
TERMINALS: Phosphor Bronze, Ag over Ni plating.
SOLDERABILITY: Lead free compatible - No clean.

NOTE: Specifications and materials listed above are for switches with standard options. For information on specific and custom switches, consult Customer Service Center.

Build-A-Switch

Complete part numbers for SDP Series are shown below.

SDP002

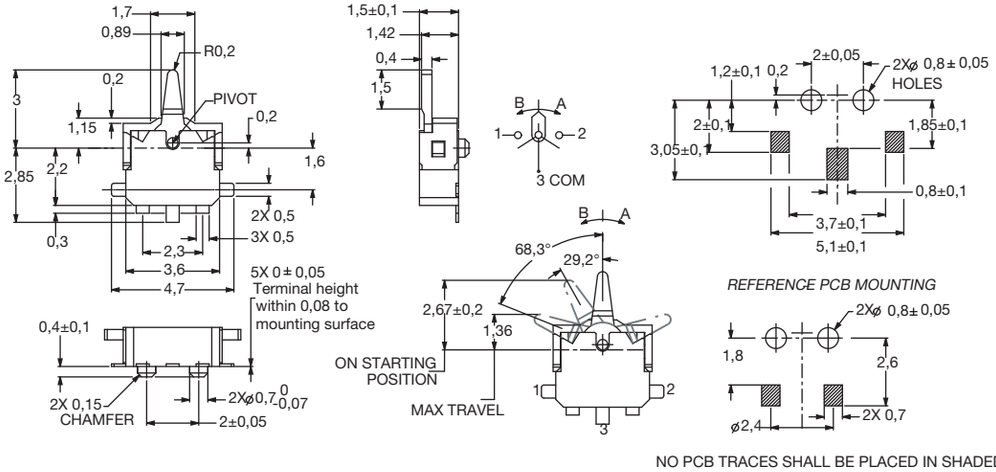

NO PCB TRACES SHALL BE PLACED IN SHADED AREAS

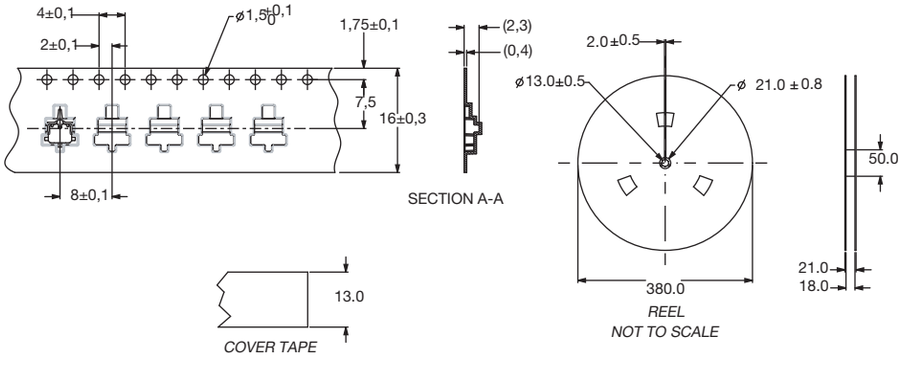

SDS Series
Side Actuated Detect Switches

Features/Benefits

- ***Low profile package sits just 2mm off PCB***
- ***2mm overtravel ideal for detector applications***
- ***Low actuation force (75 grams max.)***
- ***Pick & place compatible, available in tape & reel packaging***
- ***RoHS compliant and compatible***

Typical Applications

- ***Medical devices***
- ***Consumer electronic devices***
- ***PCB lock cam detect***
- ***Smart card detect***
- ***ATCA and MicroTCA***

Specifications

CONTACT RATING: 100 mA @ 12 VDC.
MECHANICAL & ELECTRICAL LIFE: 50,000 cycles.
CONTACT RESISTANCE: 100 m Ω max. initial.
INSULATION RESISTANCE: 10 M Ω min. @ 100 VDC.
OPERATING TEMPERATURE: –40ºC to +85ºC.
SOLDERABILITY: IR compatible, no wash. 260ºC max.
PACKAGING: Bulk or tape & reel (3000 per reel).

Materials

BASE: Glass filled LCP (UL 94V-0).
ACTUATOR: Glass Filled LCP (UL94V-0).
SURFACE PLATE: Nickel silver w/silver plate.
MOVABLE CONTACT: Phosphor bronze, see table for plating.
TERMINALS: Phosphor bronze, see table for plating.

NOTE: Specifications and materials listed above are for switches with standard options. For information on specific and custom switches, consult Customer Service Center.

How to Order

Complete part numbers for SDS Series Switches are shown below.

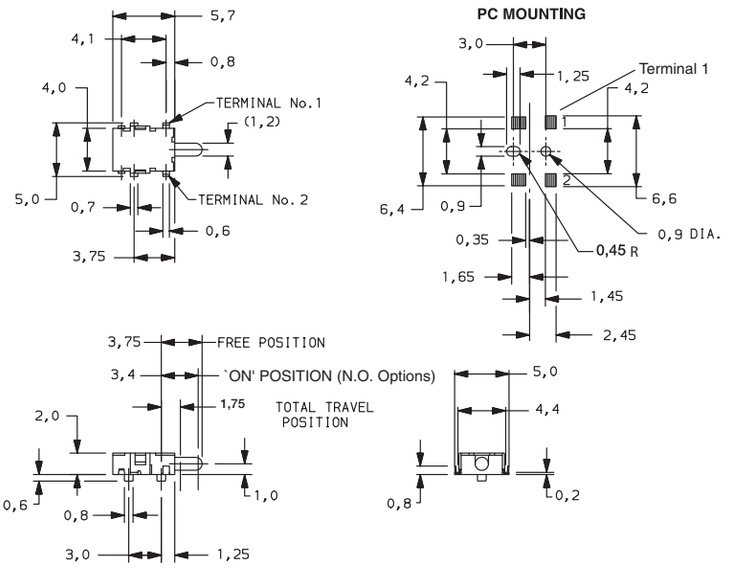

PART NUMBER	HOUSING COLOR	PACKAGING	SCHEMATIC	Contact Plating	Terminal Plating
SDS001	Black	Bulk	N.O.	Silver Clad	Silver Plate
SDS001R		Tape & Reel			
SDS002	White	Bulk	N.C.		
SDS002R		Tape & Reel			
SDS004	Black	Bulk	N.O.	Gold Flash	Gold Flash
SDS004R		Tape & Reel			
SDS005	White	Bulk	N.C.		
SDS005R		Tape & Reel			

SDS001
SPST

TAPE & REEL

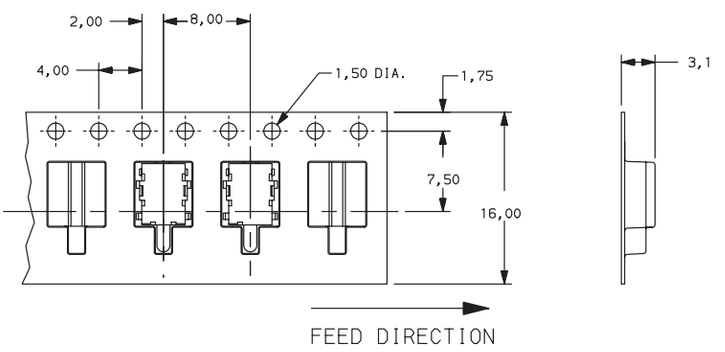

Third Angle Projection

Dimensions are shown: mm
Specifications and dimensions subject to change

DDS Series
Micro Mini Thru-hole Detect Switches

Features/Benefits

- ***Vertical or horizontal actuation***
- ***2mm overtravel—Ideal for detector applications***
- ***Low actuations force (less than 40 grams)***
- ***RoHS compliant and compatible***

Typical Applications

- ***Detect the presence of a mechanical device***
- ***Medical devices***
- ***Consumer electronic devices***

Specifications

CONTACT RATING: 0.1A @ 30 VDC.
MECHANICAL & ELECTRICAL LIFE: 50,000 cycles.
CONTACT RESISTANCE: 150 m Ω max. initial.
INSULATION RESISTANCE: 100 M Ω min. @ 100 VDC.
OPERATING TEMPERATURE: –20ºC to +70ºC.
DIELECTRIC STRENGTH: 100 volts AC @ 60 Hz.
PACKAGING: Bulk.

Materials

HOUSING: P.P.S.
ACTUATOR: PA66
MOVABLE CONTACT: Tin bronze, silver plated.

NOTE: Specifications and materials listed above are for switches with standard options. For information on specific and custom switches, consult Customer Service Center.

How To Order

Complete part numbers for DDS Series Switches are shown below.

DDS001
SPST

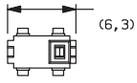

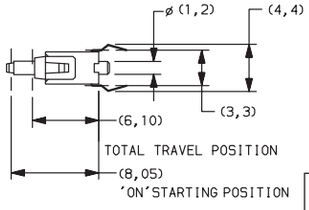

PART NUMBER	DESCRIPTION	SCHEMATIC
DDS001	Vertical Actuator	1 ● ● 2 SPST N.O.

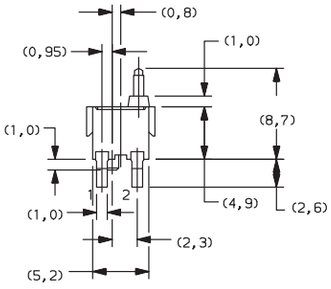

PC MOUNTING

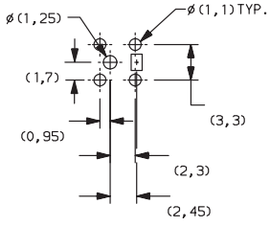

Third Angle Projection

Dimensions are shown: mm
Specifications and dimensions subject to change

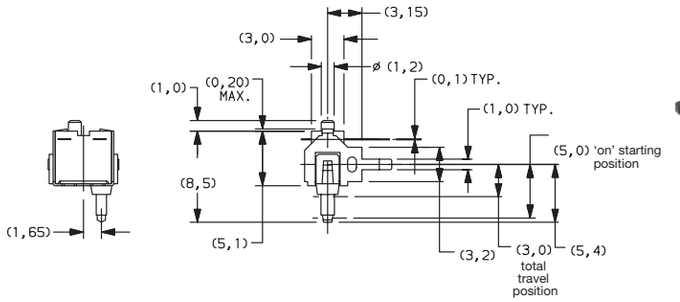

DDS002
SPST

PART NUMBER	DESCRIPTION	SCHEMATIC
DDS002	Right angle, actuator right	1 ● ● 2 SPST N.O.

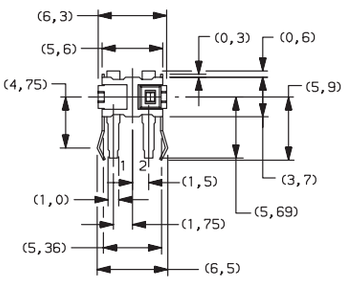

PC MOUNTING

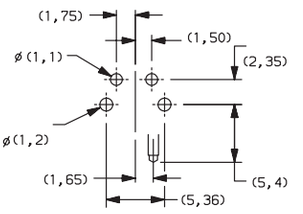

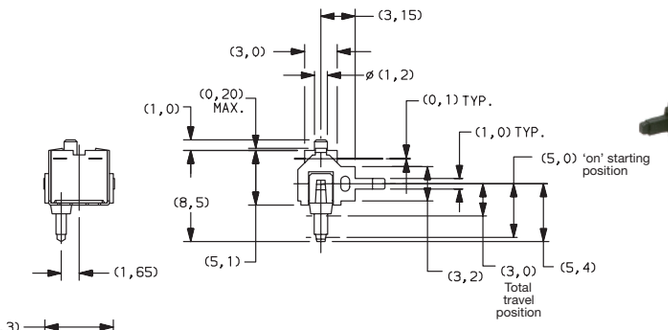

PART NUMBER	DESCRIPTION	SCHEMATIC
DDS003	Right angle, actuator left	1 ● ● 2 SPST N.O.

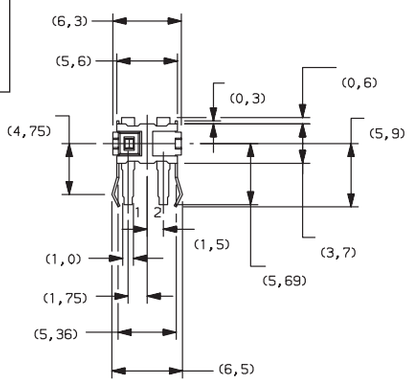

PC MOUNTING

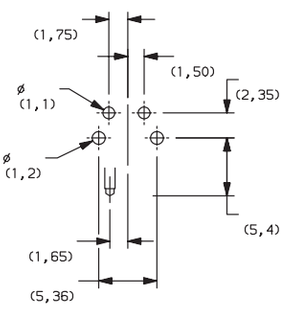

Third Angle Projection

Dimensions are shown: mm
Specifications and dimensions subject to change

MDS Series
Micro Snap-acting Detect Switches

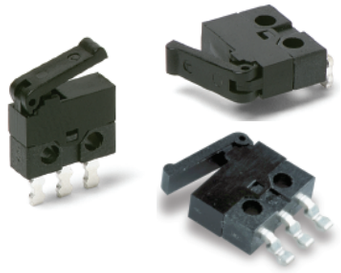

Features/Benefits

- ***Snap-acting tactile feel***
- ***Small package size***
- ***Available in vertical or right angle PCB mount***
- ***RoHS compliant and compatible***

Typical Applications

- ***Detect the presence of a mechanical device***
- ***Medical devices***
- ***Consumer electronic devices***
- ***ATCA or MicroTCA devices***

Specifications

CONTACT RATING: 300mA @ 30 VDC.
MECHANICAL & ELECTRICAL LIFE: 30,000 operations.
CONTACT RESISTANCE: 100 m Ω max.
OPERATING TEMPERATURE: –25°C to +70°C.
SOLDERABILITY: According to lead free solder profiles.
PACKAGING: Available in bulk or tape and reel.
OPERATING FORCE: 50 g Max.
RELEASE FORCE: 3g Min.

Materials

BASE: PA9T
COVER & ACTUATOR: PA9T
MOVABLE CONTACT: Copper alloy, silver plated.
STATIONARY CONTACTS: Copper alloy, silver plated.
TERMINALS: Copper alloy, silver plated.

NOTE: MDS series is RoHS compliant, and compatible. See technical data section of this catalog for RoHS compliant and compatible definitions and specifications.

NOTE: Specifications and materials listed above are for switches with standard options. For information on specific and custom switches, consult Customer Service Center.

Build-A-Switch

To order, simply select desired option from each category and place in the appropriate box. Available options are shown and described on pages E-21 and E-25. For additional options not shown in catalog, consult Customer Service Center.

M D S

Series
MDS SPDT

Operating Force
65 50 grams

Electrical Rating
00A 300mA @ 30 VDC

Actuator
L02 Standard lever
L03 Higher OP lever

Termination Style
PS PC Thru-hole, Short
PL PC Thru-hole, Long
RS PC Thru-hole, Short, Right bend
RL PC Thru-hole, Long, Right bend
LS PC Thru-hole, Short, Left bend
LL PC Thru-hole, Long, Left bend
SL SMT, Left
SR SMT, Right
CL SMT, Left bracket with pins
CR SMT, Right bracket with pins
BL SMT, Left bracket no pins
BR SMT, Right bracket no pins

SERIES M D S

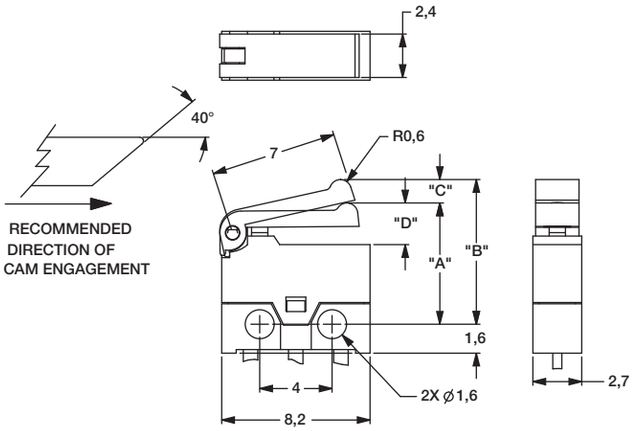

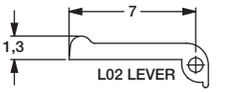

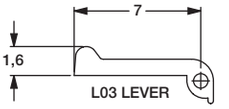

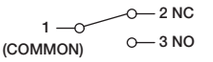

SCHEMATIC SPDT

OPERATING CHARACTERISTICS			
		LEVER L02	LEVER L03
OPERATING POSITION	DIM 'A'	6.7±0.5	7.0 +/-0.5
FREE POSITION	DIM 'B'	8 MAX	8.5 MAX
PRETRAVEL	DIM 'C'	1,8 MAX	1.8 MAX
OVER TRAVEL	DIM 'D'	0.3 MIN	0.3 MIN
CONTACT RATING		0.3A @ 30 VDC	0.3A @ 30VDC
OPERATING FORCE		50 GRAMS F. MAX	50 GRAMS F. MAX

OPERATING FORCE

OPTION CODE	OPERATING FORCE
65	50 grams max.

ELECTRICAL RATING

OPTION CODE	ELECTRICAL RATING
00A	300mA @ 30 V DC

ACTUATOR

L02 STANDARD LEVER

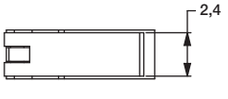

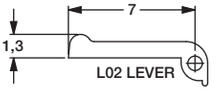

L03 HIGHER OP LEVER

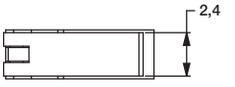

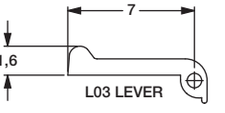

Third Angle Projection

Dimensions are shown: mm
Specifications and dimensions subject to change

TERMINATIONS

PCB Mounting Pattern

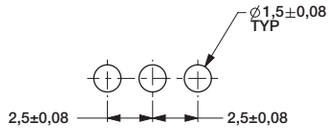

PCB MOUNTING

PS PC THRU-HOLE, SHORT STRAIGHT

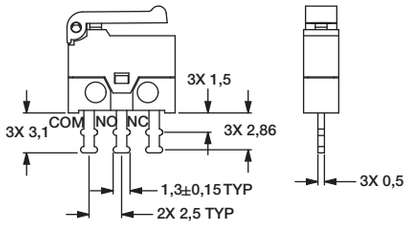

PL PC THRU-HOLE, LONG STRAIGHT

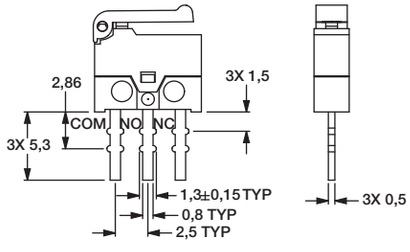

RS PC THRU-HOLE, SHORT RIGHT BEND

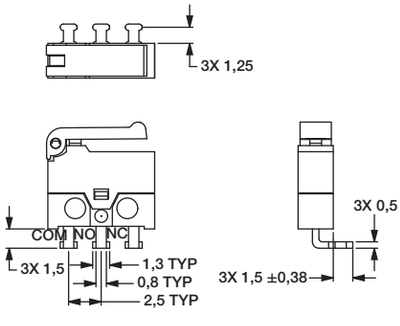

RL PC THRU-HOLE, LONG SHORT BEND

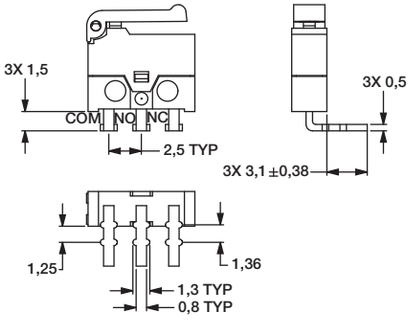

LS PC THRU-HOLE, SHORT LEFT BEND

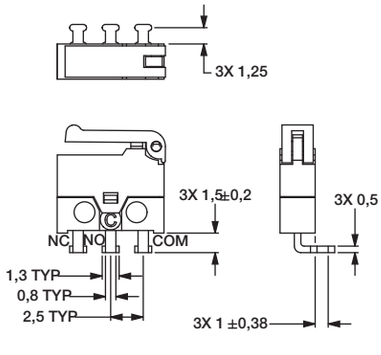

LL PC THRU-HOLE, LONG LEFT BEND

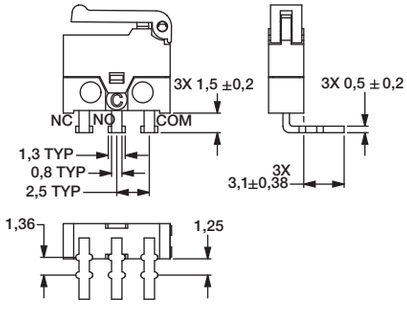

Third Angle Projection

Dimensions are shown: mm
Specifications and dimensions subject to change

TERMINATIONS

SL SMT, LEFT MOUNT

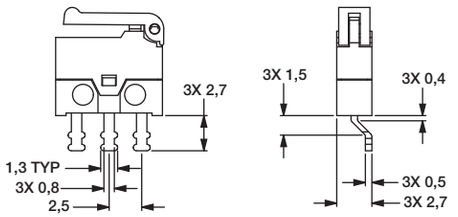

SMT Mounting Pattern

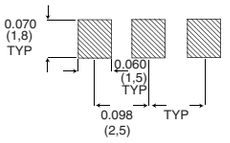

SR SMT, RIGHT MOUNT

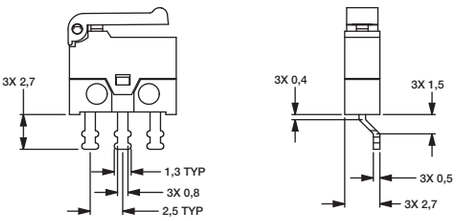

SMT Mounting Pattern

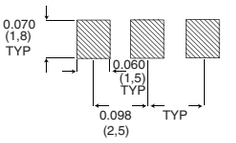

CL SMT, LEFT BRACKET WITH PINS

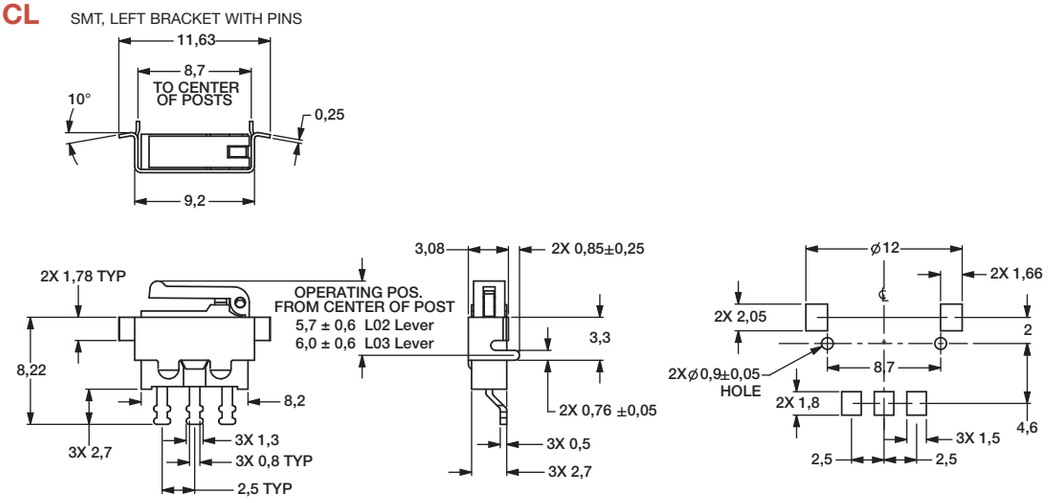

CR SMT, RIGHT BRACKET WITH PINS

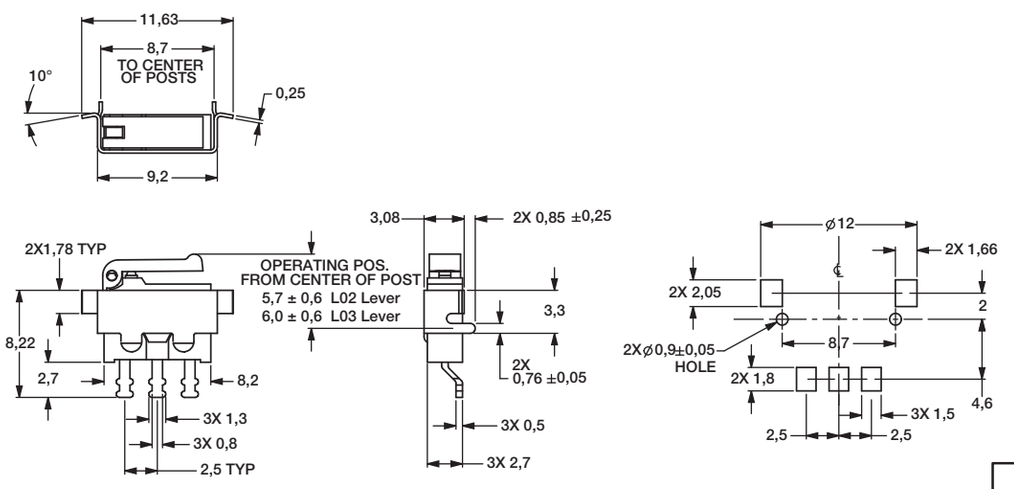

Third Angle Projection

Dimensions are shown: mm
Specifications and dimensions subject to change

TERMINATIONS

BL SMT, LEFT BRACKET NO PINS

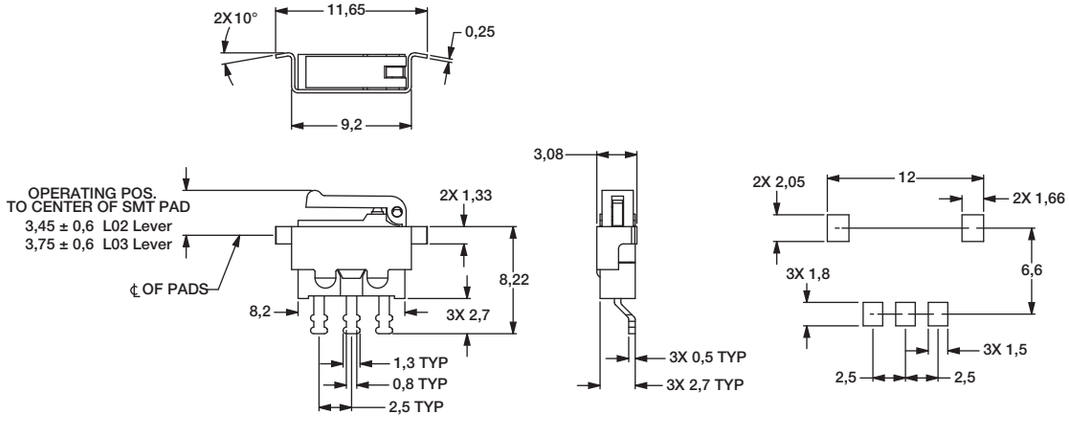

BR SMT, RIGHT BRACKET NO PINS

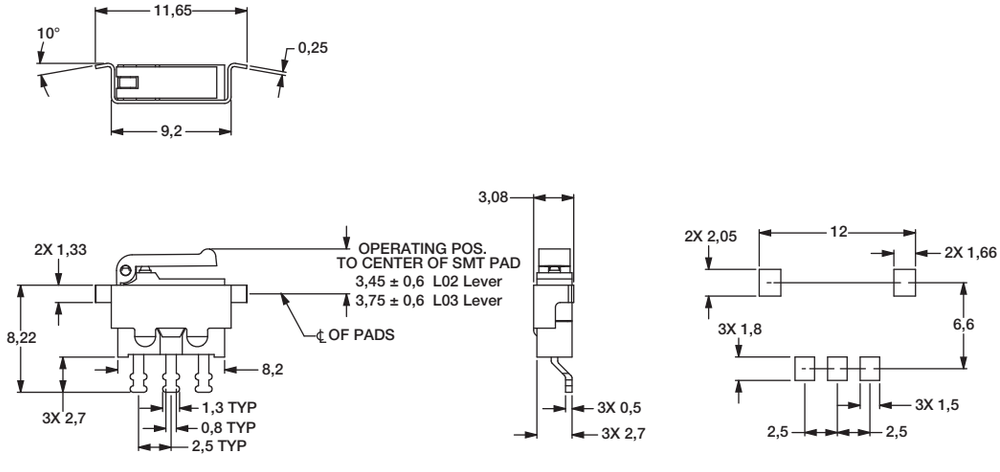

Third Angle Projection

Dimensions are shown: mm
Specifications and dimensions subject to change

TAPE & REEL

SL SMT, LEFT MOUNT

SR SMT, RIGHT MOUNT

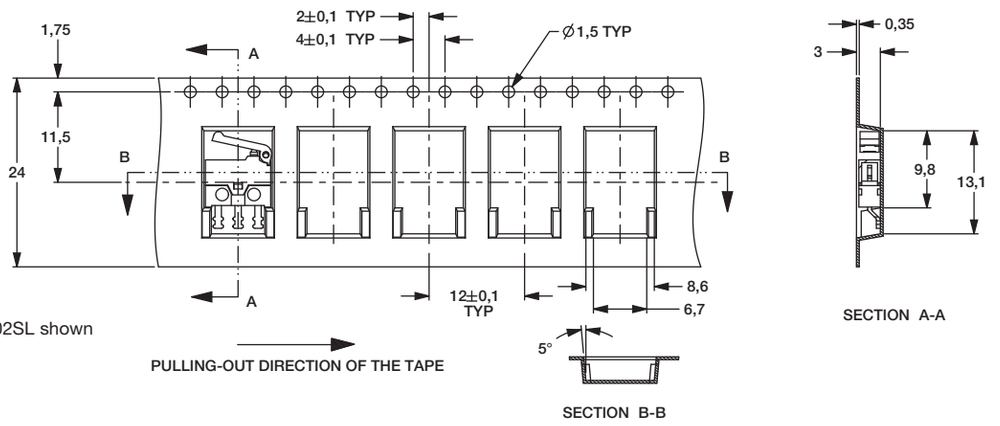

MDS6500AL02SL shown

CL SMT, LEFT MOUNT

CR SMT, RIGHT MOUNT

BL SMT, LEFT MOUNT

BR SMT, RIGHT MOUNT

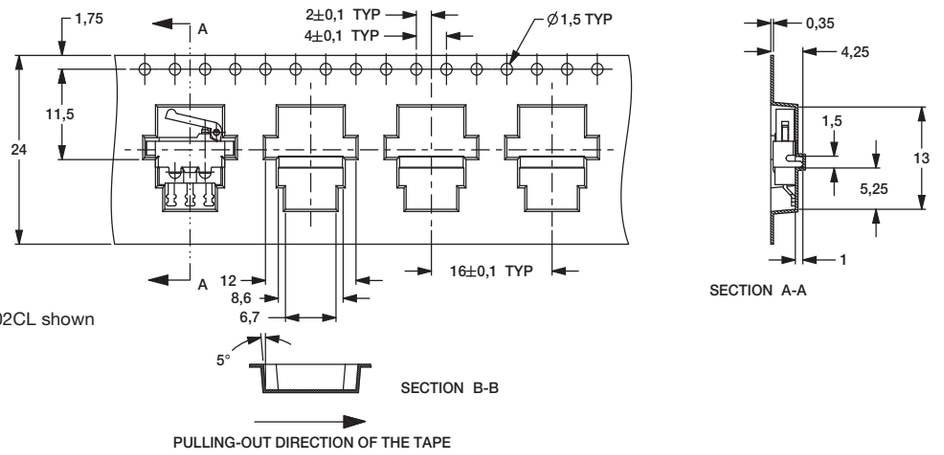

MDS6500AL02CL shown

Supplied in carrier tape meeting the EIA-481-2 standard for 24mm tape.

Packaging quantity: SL and SR; 1,600 pieces per reel
CL, CR, BL and BR; 1,000 pieces per reel

Third Angle Projection

Dimensions are shown: mm
Specifications and dimensions subject to change

KDS Series
Intrusion Switches

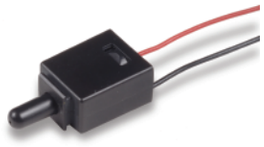

Features/Benefits

- ***Slot mount into chassis to reduce installation cost***
- ***Wire harness length & connector easily customized***
- ***Available in N.O. or N.C. configuration***
- ***RoHS compliant***

Typical Applications

- ***Intrusion/Alarm switch in network desktop PC***
- ***Intrusion/Alarm switch in telecommunication equipment***
- ***Intrusion/Alarm switch in cellular base station***

Specifications

CONTACT RATING: 0.4 VA max. @ 20 V AC or DC.

MECHANICAL & ELECTRICAL LIFE: 10,000 actuations min. at full load.

CONTACT RESISTANCE: 200 m Ω max. initial @ 2-4 V DC, 100mA.

INSULATION RESISTANCE: 10^9 Ω min.

OPERATING TEMPERATURE: –40°C to +85°C

TRAVEL: KDS11: Pre-travel 0.180" TYP; Overtravel 0.223"
KDS33: No pre-travel, full travel 0.403"

DIELECTRIC STRENGTH: 500 Vrms min. @ sea level.

PACKAGING: Bulk packaging.

Materials

HOUSING: Nylon 6/6 (UL 94V-0)

ACTUATOR: Nylon 6/6 (UL 94V-0)

MOVABLE CONTACT: Copper alloy, gold plate over nickel plate.

FIXED CONTACT: Brass, gold plate over nickel plate.

WIRE: UL 1061-24 AWG.

NOTE: Specifications and materials listed above are for switches with standard options. For information on specific and custom switches, consult Customer Service Center.

How To Order

Complete part numbers for KDS Series Switches are shown below.

PART NUMBER	SWITCH FUNCTION POS. 1	SWITCH FUNCTION POS. 2	SCHEMATIC
KDS11	OFF	MOM.	SPST N.O.
KDS33	ON	OFF	SPST N.C.

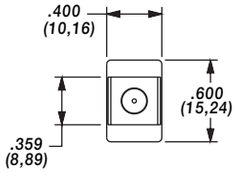

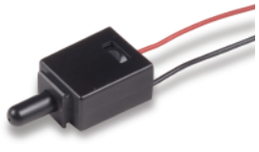

KDS33

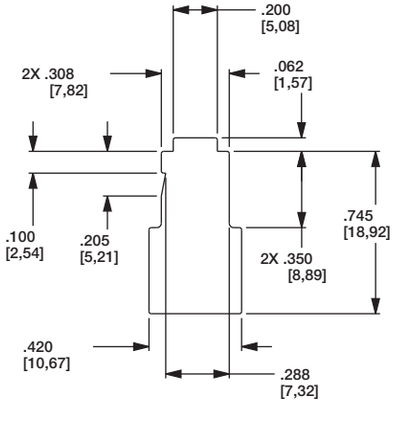

PANEL CUT-OUT THICKNESS 1,02

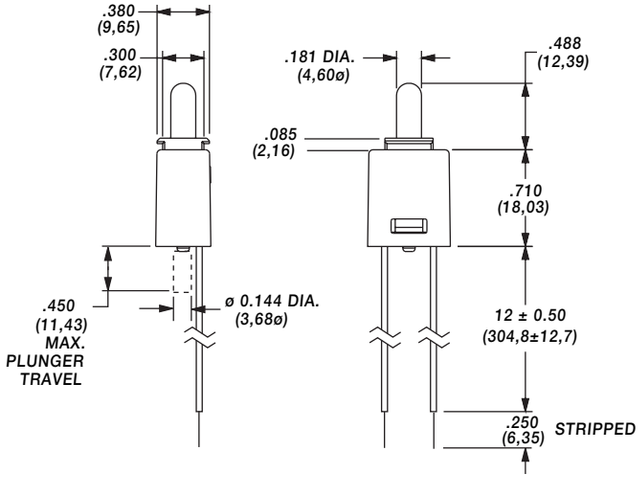

Dimensions are shown: mm
Specifications and dimensions subject to change

Features/Benefits

- ***Reliable contact design***
- ***Available with pretravel and overtravel***
- ***RoHS compliant***

Typical Applications

- ***Alarm systems***
- ***Computers***
- ***Detector switch application***

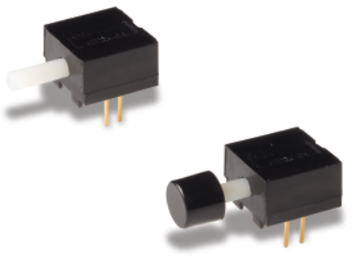

Models Available

Specifications

CONTACT RATING: Q contact material:
0.25 AMPS @ 125 V AC or DC (UL). See page F-29 for additional ratings.

ELECTRICAL LIFE: 10,000 actuations min. at full load.

CONTACT RESISTANCE: Below 30 mΩ typ. initial @ 2-4 V DC, 100 mA, for both silver and gold plated contacts.

INSULATION RESISTANCE: $10^9\Omega$ min.

DIELECTRIC STRENGTH: 1,000 Vrms min. @ sea level.

OPERATING TEMPERATURE: –30°C to 85°C.

CAP INSTALLATION FORCE: 10 lbs. max. permissible.

NOTE: Any models supplied with Q or B contact material are RoHS compliant.

NOTE: Specifications and materials listed above are for switches with standard options. For information on specific and custom switches, consult Customer Service Center.

Materials

HOUSING & BUSHING: 6/6 nylon (UL94V-2), black.

ACTUATOR: 6/6 nylon (UL 94V-2), natural.

MOVABLE CONTACT: B contact material: Bronze or copper, with gold plate over nickel plate. See page F-39 for additional contact materials.

STATIONARY CONTACTS & TERMINALS: B contact material: Copper, with gold plate over nickel plate. See page F-29 for additional contact materials.

RETURN SPRING: Music wire, phosphor coated.

MOUNTING NUT: Brass, nickel plated.

TERMINAL SEAL: Epoxy.

Build-A-Switch

To order, simply select desired option from each category and place in the appropriate box. Available options are shown and described on pages E-28 and E-29. For additional options not shown in catalog, consult Customer Service Center.

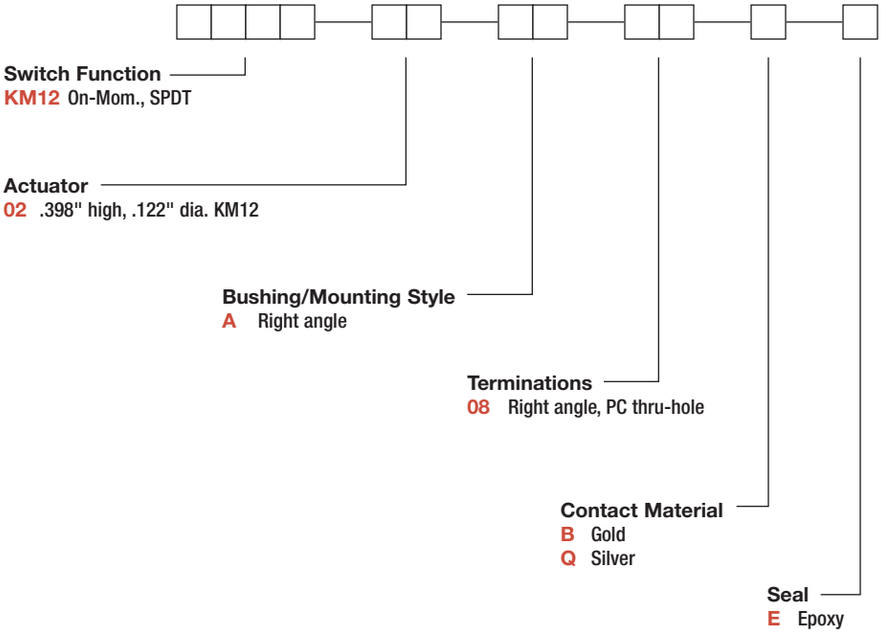

KM Series
Subminiature Detect Switches

SWITCH FUNCTION

NO. POLES	MODEL NO.	SWITCH FUNCTION POS. 1	SWITCH FUNCTION POS. 2	CONNECTED TERMINALS POS. 1	CONNECTED TERMINALS POS. 2	SCHEMATIC
SP	KM12	ON	MOM.	2-1	4-3	SPDT

SPDT

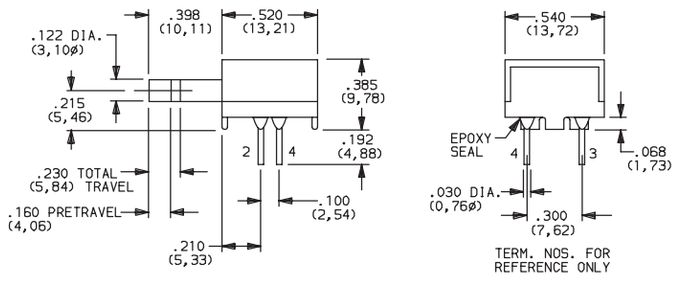

Part number shown: KM1202A08BE

ACTUATOR

02 .398" HIGH, .122" DIA.

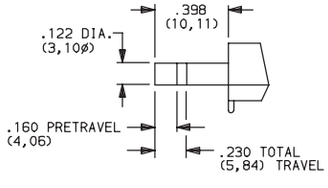

NOTE: Caps available for plunger options, see page E-29.

BUSHING/ MOUNTING STYLE

A RIGHT ANGLE

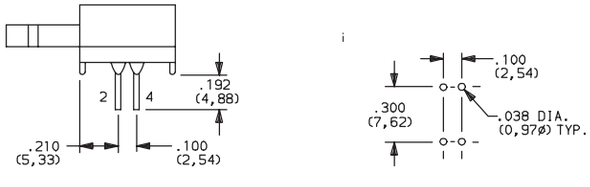

TERMINATIONS

08 RIGHT ANGLE, PC THRU-HOLE

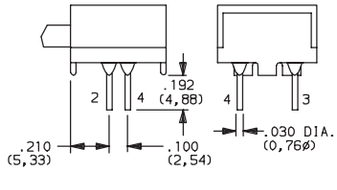

Third Angle Projection

Dimensions are shown: mm
Specifications and dimensions subject to change

CONTACT MATERIAL

OPTION CODE	RoHS COMPLIANT *	RoHS COMPATIBLE *	CONTACT AND TERMINAL MATERIAL	RATINGS	
B	YES	YES	GOLD [1]	LOW LEVEL/DRY CIRCUIT	0.4 VA MAX. @ 20 V AC OR DC MAX.
Q	YES	YES	SILVER [2]	POWER	0.25 AMPS @ 125 V AC OR DC (KM11, KM12) (UL) 1 AMP @ 125 V AC OR 28 V DC (KM33).

* Note: See Technical Data section of this catalog for RoHS compliant and compatible definitions and specifications.

[1] STATIONARY CONTACTS & TERMINALS: Copper, with gold plate over nickel plate.
MOVABLE CONTACT: Phosphor bronze or beryllium copper, with gold plate over nickel plate.

[2] STATIONARY CONTACTS & TERMINALS: Copper, silver plated (standard with all termination options).
MOVABLE CONTACT: Phosphor bronze or beryllium copper, silver plated.

[3] STATIONARY CONTACTS & TERMINALS: Copper, with gold plate over nickel plate over silver plate.
MOVABLE CONTACT: Phosphor bronze or beryllium copper, with gold plate over nickel plate over silver plate.

NOTE: Any models supplied with Q or B contact material are RoHS compliant.

KM12 models ® when ordered with 'Q' contact material.

SEAL

E EPOXY SEAL

AVAILABLE HARDWARE

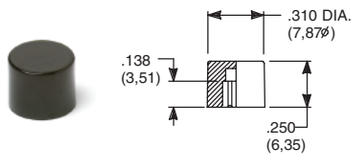

PART NO.

801801000 WHITE
801802000 BLACK
801803000 RED

Material: Nylon
Finish: Gloss

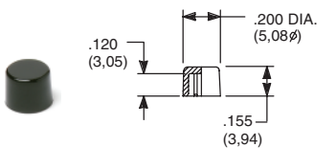

PART NO.

708901000 WHITE
708902000 BLACK
708903000 RED

Material: Nylon
Finish: Gloss

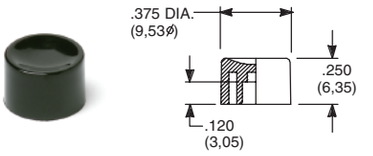

PART NO.

752701000 WHITE
752702000 BLACK
752703000 RED

Material: Nylon
Finish: Gloss

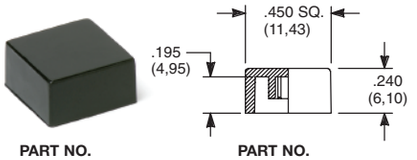

PART NO.

484601000 WHITE
484602000 BLACK
484603000 RED

Material: Nylon
Finish: Gloss

PART NO.

798201000 WHITE
798202263 BLACK
798203000 RED

Material: Nylon
Finish: Matte

NOTE: Other cap colors available, consult Customer Service Center.

Third Angle Projection

Dimensions are shown: mm
Specifications and dimensions subject to change

MPS Series
Magnetic Proximity Sensors

Features/Benefits

- ***Long life—4M operations***
- ***Sealed contacts***
- ***Quality construction***
- ***Quick and easy installation***
- ***UL 61058 approved***

Typical Applications

- ***Automotive sensors and indicators***
- ***Industrial sensors***
- ***Factory automation equipment***
- ***Server / storage***
- ***Security, alarms for windows***

Specifications

CONTACT RATINGS: 3.0 W max. @ 30 V DC or 30 V AC max. @ 0.3 AMP max.; 1.0 msec. max. operate time (including bounce); 1.0 AMP max. carry current.

CONTACT RESISTANCE: 100 m Ω max. initial.

DIELECTRIC STRENGTH: 200 V DC min.

ELECTRICAL CIRCUIT: SPST NO (Contact Form A). Reed switch opens when magnet is removed from proximity. Contacts are held closed when magnet is within actuation range.

OPERATING TEMPERATURE: -40°F to 212°F (-40°C to 100°C).

OPERATING DISTANCE/ALIGNMENT: Operate (pull-in or make) points are nominal values with ± 10% tolerance. Release points are 110% to 150% of the operating points.

MECHANICAL & ELECTRICAL LIFE: 4 million operations.

PACKAGING: Bulk packaging, 10 switch and magnet pairs per package.

Materials

HOUSING/SPACER/COVER: ABS plastic (UL94V-0), white.

REED SWITCH: Rhodium coated reed contacts in hermetically sealed, nitrogen filled glass capsule. Closed when magnet is in close proximity. Used in closed loop circuits.

WIRE LEADS: UL 1061/ UL1007 / UL2468

All are 22 AWG wire: stranded, made of copper or aluminum; Length: 12 in. with ends stripped; Color: white.

POTTING (around wires): Epoxy.

MAGNETS: NdFeB

ADHESIVE MOUNTING: Foam-backed, pressure-sensitive adhesive with release liner.

NOTE: Specifications and materials listed above are for switches with standard options. For information on specific and custom switches, consult Customer Service Center.

How To Order

PART NUMBER	SWITCH TYPE
MPS45WGW	Subminiature surface mount (adhesive or flange), side exit leads, 1" make gap.

UL 61058

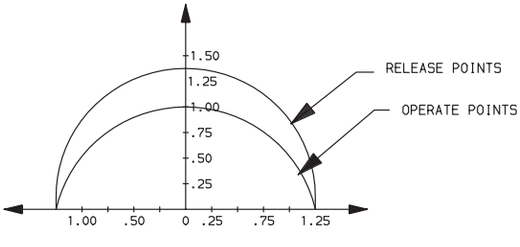

OFFSET OF CENTERLINES AND DISTANCE BETWEEN FACES OF SWITCH AND MAGNET (INCHES).

ACTUATION CHART

NOTE: UL 61058 Rating

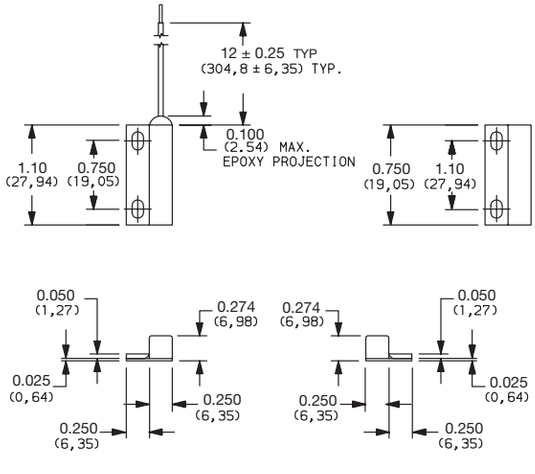

SWITCH **MAGNET**

Third Angle Projection

Dimensions are shown: inches (mm)
Specifications and dimensions subject to change

Actuating Positions

When installing recessed and surface mount contacts, magnet position is very important. The switch and magnet must always be parallel or end to end, and never in a 'T' configuration.

Correct Configuration

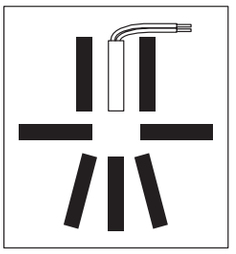

Incorrect Configuration

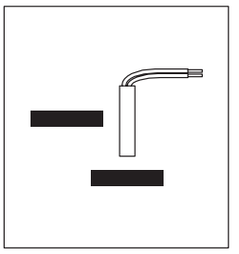

Gap Distance

Gap distance is a combination of the horizontal and vertical plane separation of the switch and magnet. Example: if a recessed magnet is 1/4" off the centerline of the switch, the make gap is reduced by 1/4"

Center Alignment

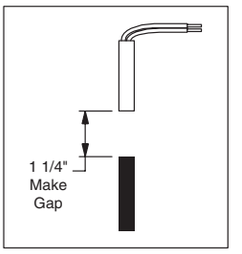

Off Center Alignment

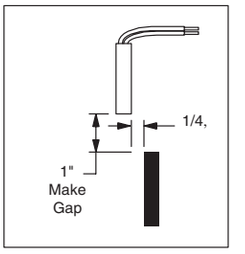

Third Angle Projection

Dimensions are shown: inches (mm)
Specifications and dimensions subject to change

ZMA Series
Subminiature Snap-acting Switches

Features/Benefits

- ***Reliable snap-acting mechanism***
- ***Long electrical and mechanical life***
- ***Compact size—Ideal when space is limited***
- ***Various PCB terminals and actuators***
- ***RoHS compatible & compliant***

Typical Applications

- ***PCB detection switch***
- ***Communication devices***
- ***Testing equipment***
- ***Security/Alarm systems***
- ***Consumer electronics***

UL61058-1

Specifications

CONTACT RATING: 3A @ 125 V AC 24 V DC
1 A @125 / 250 V AC 24 V DC
0.1A @ 125 V AC 60 V DC
ELECTRICAL LIFE: 300,000 cycles @ 0.1A / 10,000 cycles @ 3A.
MECHANICAL LIFE: 1,000,000 cycles.
INSULATION RESISTANCE: 100 M ohm min.
DIELECTRIC STRENGTH: 500 Vrms.
OPERATING TEMPERATURE: –40°C to 85°C
OPERATING FORCE: 80 or 150 grams.

* Low Level=conditions where no arcing occurs during switching, i.e., 0.4 VA max. @ 20 V AC or DC max.

Materials

CASE/COVER: PBT
ACTUATOR: Button nylon 6/6
MOVABLE CONTACTS: Silver alloy or gold plated
STATIONARY CONTACTS: Silver alloy or gold plated
TERMINALS: Brass, silver plated.

NOTE: Specifications and materials listed above are for switches with standard options. For information on specific and custom switches, consult Customer Service Center.

Build-A-Switch

To order, simply select desired option from each category and place in the appropriate box. Available options are shown and described on pages J-33 through J-35. For additional options not shown in catalog, consult Customer Service Center.

Z M A — [ ][ ][ ] — [ ][ ][ ] — [ ][ ][ ] — [ ] — C

Series
ZMA SP, Mom.

Electrical Rating
See charts below

Operating Force
150 5.29 oz. / 150 grams
080 2.82 oz. / 80 grams

Actuator
P00 Pin plunger
S03 Simulated roller 5.8mm
L30 Lever 20.5mm
L11 Lever 7.2mm
L08 Lever 3.95mm
A03 Roller 1.3mm
L04 Lever 3.9mm
S06 Simulated roller 2.03mm
S07 Simulated roller 0.75mm

Terminations
P PC Thru-hole
L Left-footed, PC Thru-hole
R Right-footed, PC Thru-hole
E Solder
K PC Thru-hole with rentention feature

C SPDT

Silver Contacts

Option Code	UL 1054	UL 61058-1		
00A	0.1A 60 V DC 0.1A 125 V AC	0.1A 60 V DC 0.1A 125 V AC	0.1A 125 V AC	
03A	3 A 125 V AC	3 A 125 V AC 3 A 24 V DC	3A 125 V AC	
01A		1 A 24 V DC 1 A 125 / 250 V AC		1 A 24 V DC 1 A 125 / 250 V AC

Gold Plated Contacts

Option Code	UL 1054	UL 61058-1		
G00	0.1A 60 V DC 0.1A 125 V AC	0.1A 60 V DC 0.1A 125 V AC	0.1A 125 V AC	
G03	3 A 125 V AC	3 A 125 V AC 3 A 24 V DC	3A 125 V AC	
G01		1 A 24 V DC 1 A 125 / 250 V AC		1 A 24 V DC 1 A 125 / 250 V AC

Dimensions are shown: mm
Specifications and dimensions subject to change

SERIES

ZMA SUBMINIATURE SNAP-ACTING SWITCHES – SP MOMENTARY

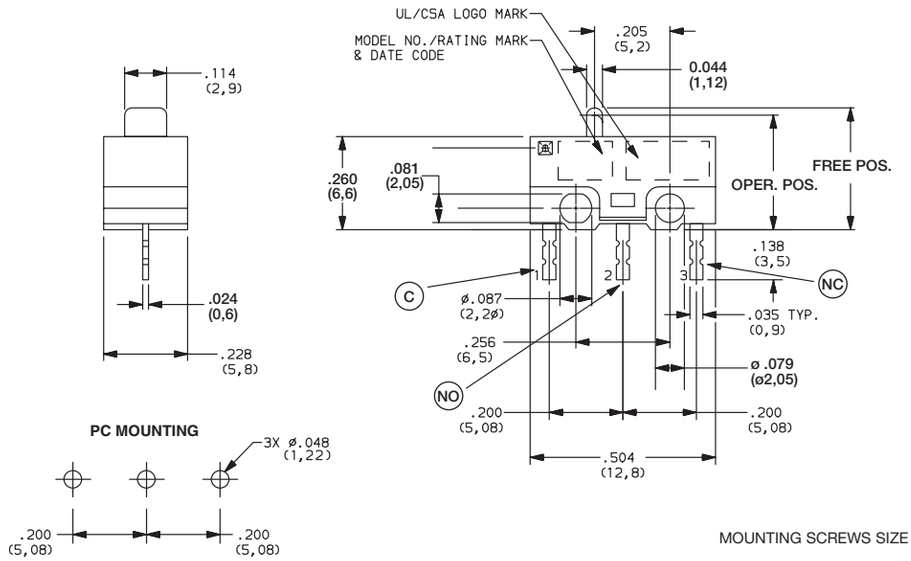

ZMA03A150L04PC
SPDT

MOUNTING SCREWS SIZE 1-64

ELECTRICAL RATING

Silver Contacts

Option Code	UL 1054	UL 61058-1	EK 14	EK 15
00A	0.1A 60 V DC 0.1A 125 V AC	0.1A 60 V DC 0.1A 125 V AC	0.1A 125 V AC	
03A	3 A 125 V AC	3 A 125 V AC 3 A 24 V DC	3A 125 V AC	
01A		1 A 24 V DC 1 A 125 / 250 V AC		1 A 24 V DC 1 A 125 / 250 V AC

Gold Plated Contacts

Option Code	UL 1054	UL 61058-1	EK 14	EK 15
G00	0.1A 60 V DC 0.1A 125 V AC	0.1A 60 V DC 0.1A 125 V AC	0.1A 125 V AC	
G03	3 A 125 V AC	3 A 125 V AC 3 A 24 V DC	3A 125 V AC	
G01		1 A 24 V DC 1 A 125 / 250 V AC		1 A 24 V DC 1 A 125 / 250 V AC

* Note: See Technical Data in section N of this catalog for RoHS compliant and compatible definition and specifications.

All models c UL us with all options.

Consult Customer Service center for availability and delivery of nonstandard ratings.

OPERATING FORCE

OPTION CODE	BASIC SWITCH OPERATING FORCE (OZ./GRAMS)
150	5.29 150
080	2.82 80

Third Angle Projection

Dimensions are shown: mm
Specifications and dimensions subject to change

ACTUATOR

P00 PIN PLUNGER

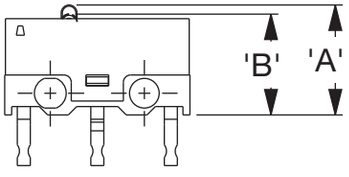

L08 LEVER 3.95MM

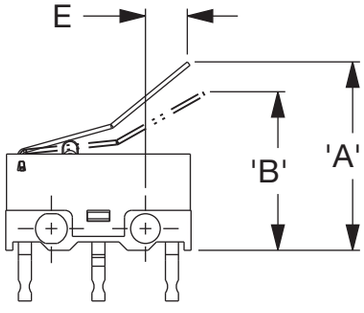

S03 SIMULATED ROLLER 5.8MM

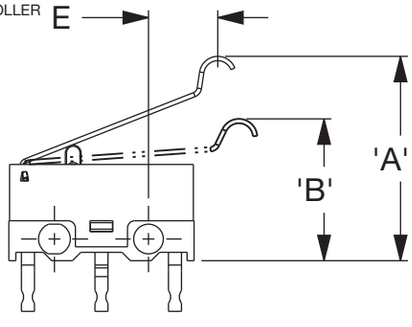

A03 ROLLER 1.3MM

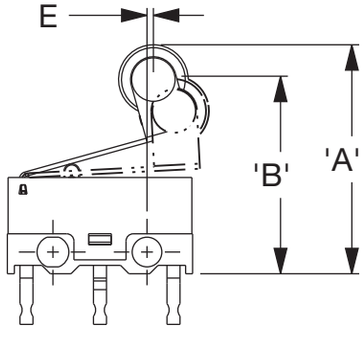

L30 LEVER 20.5MM

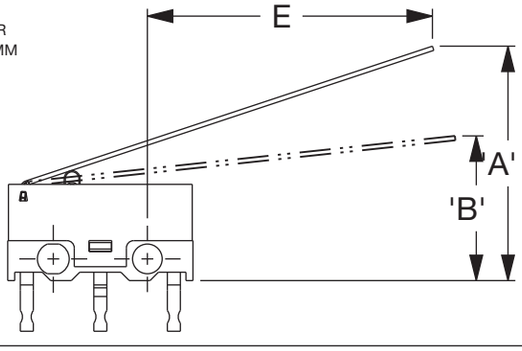

L04 LEVER 3.49MM

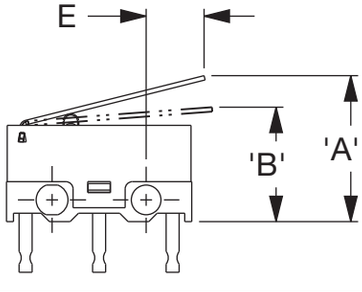

L11 LEVER 7.2MM

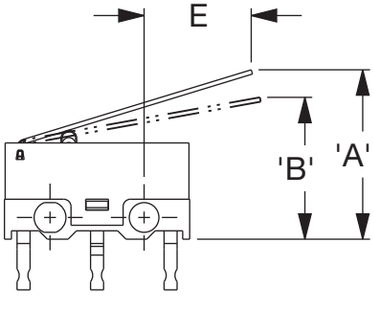

S06 SIMULATED ROLLER 2.03MM

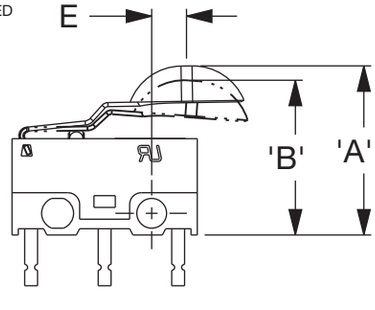

S07 SIMULATED ROLLER 0.75MM

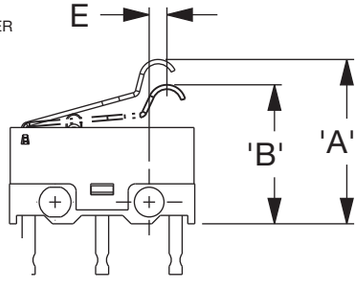

Third Angle Projection

Dimensions are shown: mm
Specifications and dimensions subject to change

SWITCH CHARACTERISTICS

CODE	OPER. FORCE MAX. (GRAMS)		REL. FORCE MIN. (GRAMS)		'A' FP MAX. (MM)	'B' OP MAX. (MM)	'C' PT MAX. (MM)	'D' OT MIN. (MM)	'E' MIN. (MM)
P00	80	150	21	35	7.35	6.9 ±0.3	0.62	0.2	
S03	25	43	5	7	14.2	9.8 ±0.9	3.5	0.7	5.41
L30 (80gf)	13	21	2	3	16.8	9.5 ±1.9	6.9	0.55	20.15
L30 (150 gf)	13	21	2	3	16.8	9.75 ±1.9	6.9	0.55	20.15
L11	25	39	4	6	11.7	8.68 ±1	4.4	0.6	7.33
L08	27	48	3	8	13.5	10.75 ±0.8	3.5	0.3	3.82
A03	34	65	6	10	16.55	13.65 ±1	3.9	0.5	0.56
L04	30	50	5	8	10.1	7.9 ±0.7	3.0	0.5	3.49
S06	33	49	5	11	12.43	10.7 ±0.8	1.43	1.25	1.97
S07	40	65	2	5	13.0	9.7 ± 1	4.3	0.5	0.49

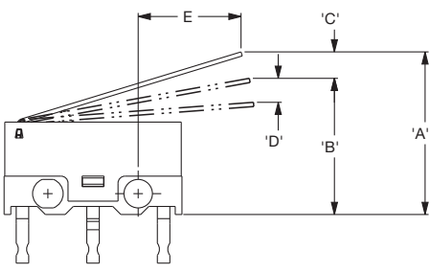

TERMINATIONS

P PC THRU-HOLE

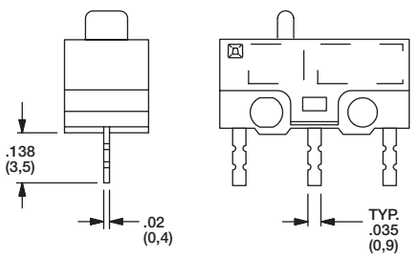

L LEFT FOOTED, PC THRU-HOLE

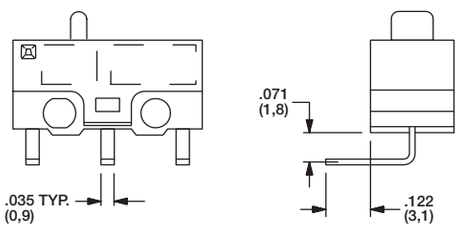

R RIGHT FOOTED, PC THRU-HOLE

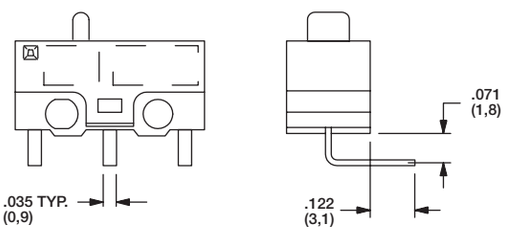

E SOLDER

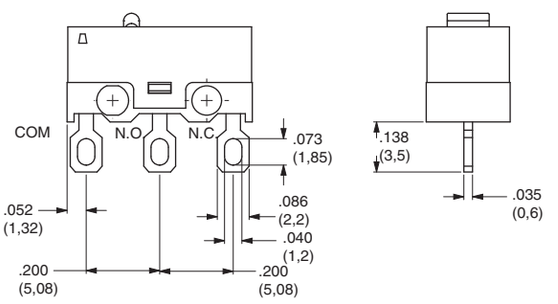

K PC THRU-HOLE WITH RETENTION FEATURE

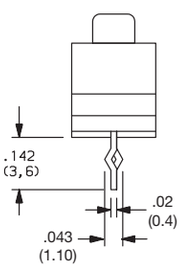

E Detect

Dimensions are shown: mm
Specifications and dimensions subject to change

KSU Series
Micro Mini Surface Mount Detect Switches

Features/Benefits

- ***New multi contact construction***
- ***Metal actuator***
- ***Low actuating force***
- ***RoHS compliant and compatible***

Typical Applications

- ***Mobile phones and other handheld devices***
- ***Portable medical devices***
- ***Audio devices***
- ***Alarm devices***
- ***Payment terminals***
- ***Smart meters***

Specifications

FUNCTION: Momentary action.

CONTACT TYPE: SPST Normally open.

TERMINALS: Gullwing type for SMT.

Mechanical

SWITCHING FORCE: 0,7 ± 0,5 N

TRAVEL TO MAKE: 0,65 mm - 0,45/+0,25 mm

MECHANICAL TRAVEL: 1,5 ± 0,2 mm

OPERATING LIFE: 100,000 cycles

Packaging

Switches are delivered on continuous tape, in reels of 1,000 pieces

Electrical

	GOLD	SILVER
MAXIMUM POWER:	0.2 VA	0.1 VA
MAXIMUM VOLTAGE:	32 VDC	32 VDC
MINIMUM VOLTAGE:	20 mV	20 mV
MAXIMUM CURRENT:	10 mA	50 mA
MINIMUM CURRENT:	0.01 mA	1 mA
CONTACT RESISTANCE:	≤100 mΩ	
INSULATION RESISTANCE:	(100 VDC) 10^9 Ω	
DIELECTRIC STRENGTH:	≥ 250 Vrms	
BOUNCE TIME:	≤ 3 ms	

Environmental

OPERATING TEMPERATURE:	–40°C to +125°C	–40°C to +85°C
STORAGE TEMPERATURE:	–55°C to + 125°C	–40°C to +85°C

Process

SOLDERING: Compatible with lead free reflow process

NOTE: Specifications listed above are for switches with standard options.
For information on specific and custom switches, consult Customer Service Center.

How To Order

Our easy build-a-switch concept allows you to mix and match options to create the switch you need. To order, select desired option from each category and place it in the appropriate box.

For any part number different from those listed above, please consult your local representative.

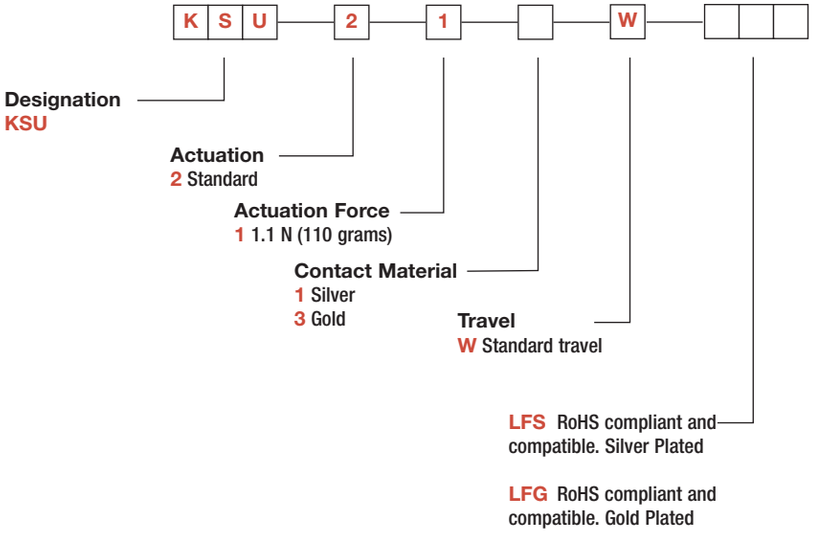

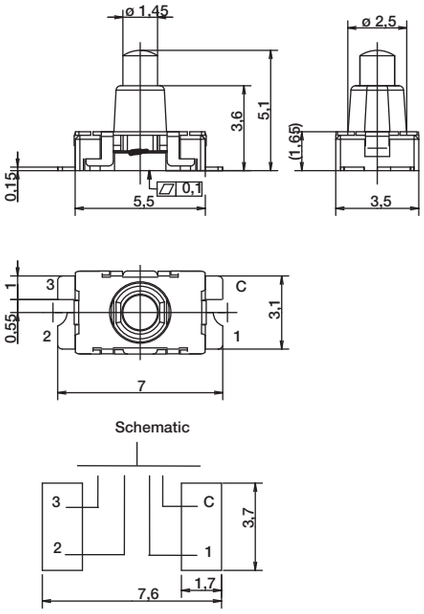

TAPE & REEL

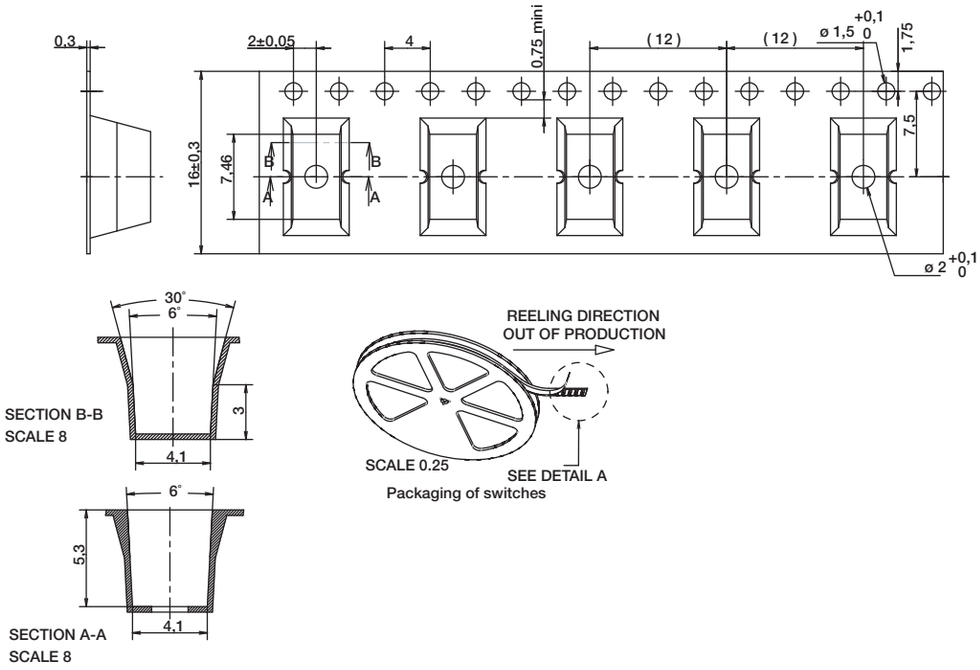

First Angle Projection

Dimensions are shown: mm
Specifications and dimensions subject to change

KSR2D/M Series
Subminiature Detect Switch for SMT

Features/Benefits

- ***Gold contacts***
- ***G terminations***
- ***Soft actuator***
- ***RoHS compliant and compatible***

Typical Applications

- ***Automotive***
- ***Industrial electronics***
- ***Medical equipment***
- ***Detector switch applications***

Specification

FUNCTION: momentary action
CONTACT ARRANGEMENT: N.O.
TERMINALS: Gullwing type for SMT

Type	Operating force Newtons	Operating life (operations)	Travel (mm)
KSR2D3MG LFG	1,5 ± 0,5N	100,000	0,3 ± 0,15
KSR2M3G LFG	0,8 ± 0,4N	100,000	0,19 ± 0,11

Packaging

Switches are delivered on continuous tape, in reels of 2,500 pieces.

For information on specific and custom switches, consult Customer Service Center.

Electrical

	Gold
MAXIMUM POWER:	0.2 VA
MAXIMUM VOLTAGE:	32 VDC
MINIMUM VOLTAGE:	20 mV
MAXIMUM CURRENT DC:	10 mA
MINIMUM CURRENT DC:	1 mA
CONTACT RESISTANCE:	100 mΩ
INSULATION RESISTANCE	(100 V): 10^9 Ω
BOUNCE TIME:	1 ms

Environmental

	Gold
OPERATING TEMPERATURE:	-40˚C to 125˚C
STORAGE TEMPERATURE:	-55˚C to 125˚C

Process

SOLDERING: Compatible with lead free reflow soldering process

How To Order

Our easy build-a-switch concept allows you to mix and match options to create the switch you need. To order, select desired option from each category and place it in the appropriate box.

For any part number different from those listed above, please consult your local representative.

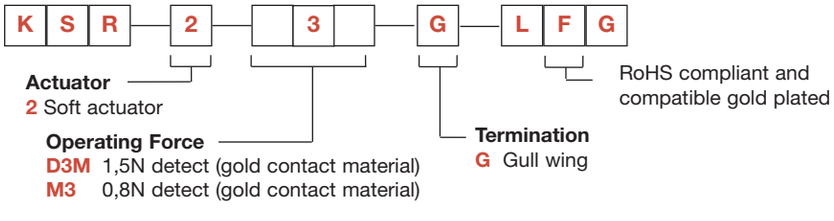

First Angle Projection

Dimensions are shown: mm
Specifications and dimensions subject to change

KSR2D/M

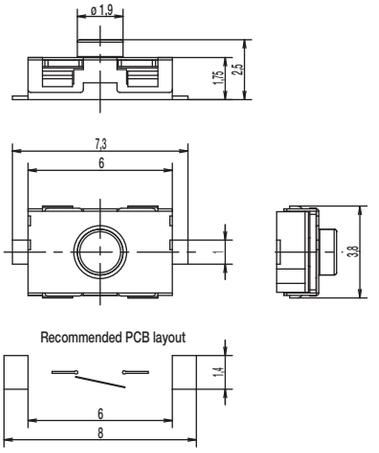

TAPE & REEL

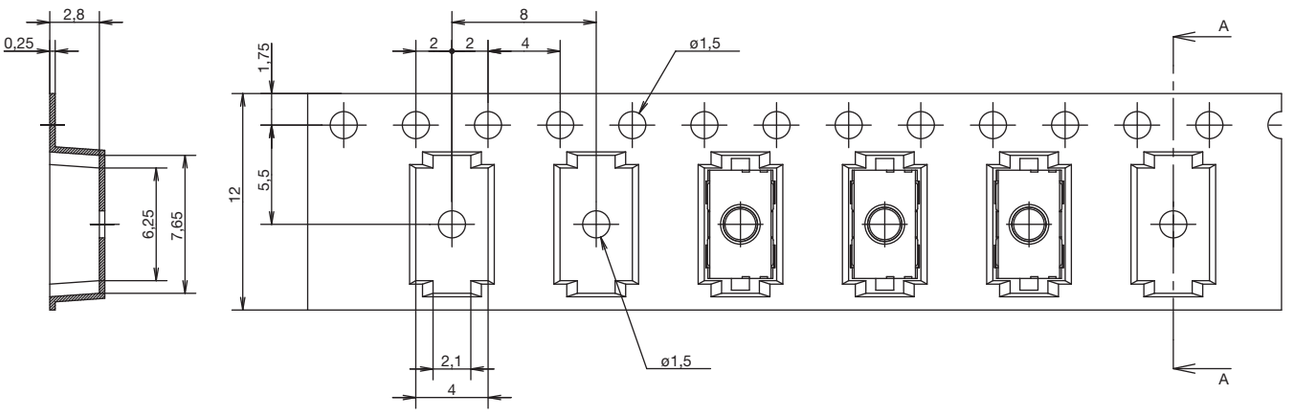

DIRECTION OF FEED

First Angle Projection

Dimensions are shown: mm
Specifications and dimensions subject to change

KSM Series
Side Actuated Detect Switches

Features/Benefits

- ***Low profile – 1,5 mm***
- ***Momentary, normally closed contact***
- ***Gold contacts***
- ***RoHS compliant and compatible***

Typical Applications

- ***Automotive***
- ***Position sensing switch***
- ***Edge card reset switch***
- ***Smart card presence switch detector***
- ***DSL and fiber optic networks***

Specifications

FUNCTION: Momentary action

CONTACT TYPE: SPST Normally closed

Mechanical

TRAVEL TO BREAK:	KSM1131D LFG	0,35 ± 0,15 mm
	KSM6161 LFG	0,5 ± 0,20 mm
TOTAL TRAVEL:	KSM1131D LFG	1,25 ± 0,2 mm
	KSM6161 LFG	1,92 ± 0,2 mm
SWITCHING FORCE:		
	KSM1131D LFG	0,15N ≤ Fce ≤ 0,90 N
	KSM6161 LFG	0,50N ≤ Fce ≤ 0,90 N
OPERATING LIFE:	KSM1131D LFG	50,000 cycles
	KSM6161 LFG	200,000 cycles

Packaging

Switches are delivered on continuous tape, in reels of 2,000 pieces (KSM1131D LFG) and 1250 pieces (KSM6161 LFG)

Electrical

	KSM1131D LFG	KSM6161 LFG
MAXIMUM POWER:	0.2 VA	1.0 VA
MAXIMUM VOLTAGE:	24 VDC	32 VDC
MINIMUM VOLTAGE:	20 mV	20 mV
MAXIMUM CURRENT DC:	50 mA	50 mA
MINIMUM CURRENT DC:	1 mA	
CONTACT RESISTANCE:	≤ 300 mΩ	≤ 900 mΩ
INSULATION RESISTANCE:	≥ 10^9 Ω	≥ 10^9
DIELECTRIC STRENGTH:	≥ 250 Vrms	≥ 250 Vrms
BOUNCE TIME:	≤ 10 ms	≤ 1,25 ms

Environmental

OPERATING TEMPERATURE:	-40°C to +85°C
STORAGE TEMPERATURE:	-55°C to +85°C

Process

SOLDERING: Compatible with lead free reflow process

NOTE: Specifications listed above are for switches with standard options. For information on specific and custom switches, consult Customer Service Center.

How To Order

Our easy build-a-switch concept allows you to mix and match options to create the switch you need. To order, select desired option from each category and place it in the appropriate box.

For any part number different from those listed above, please consult your local representative.

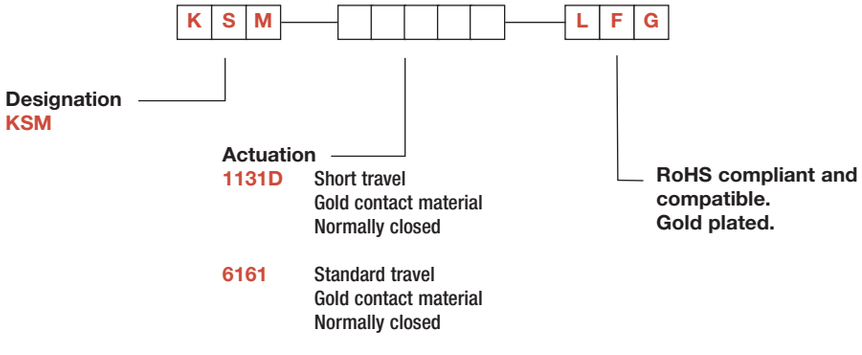

First Angle Projection

Dimensions are shown: mm
Specifications and dimensions subject to change

KSM1131D LFG

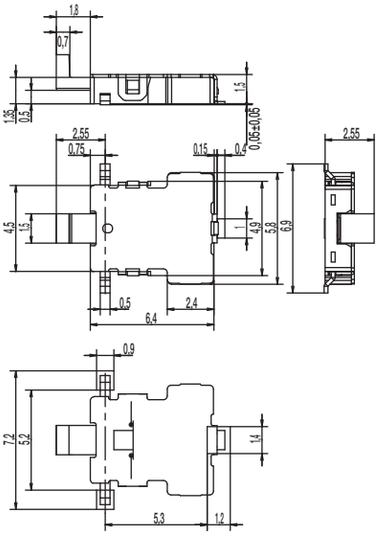

KSM6161 LFG

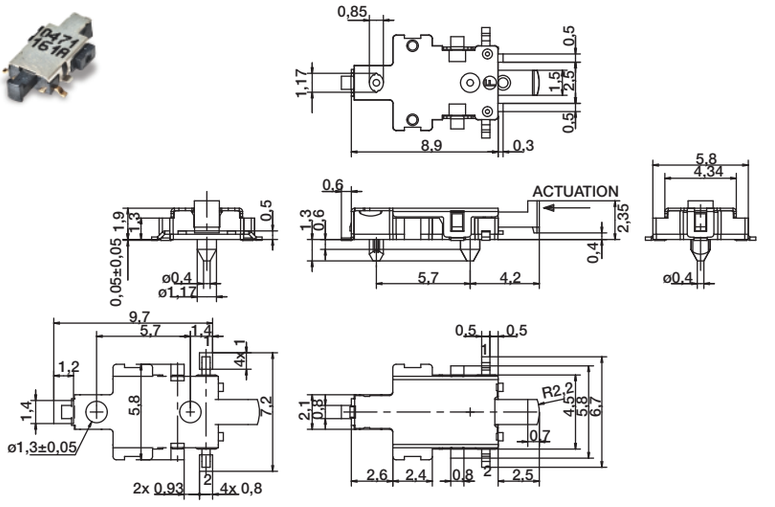

KSM1131D LFG

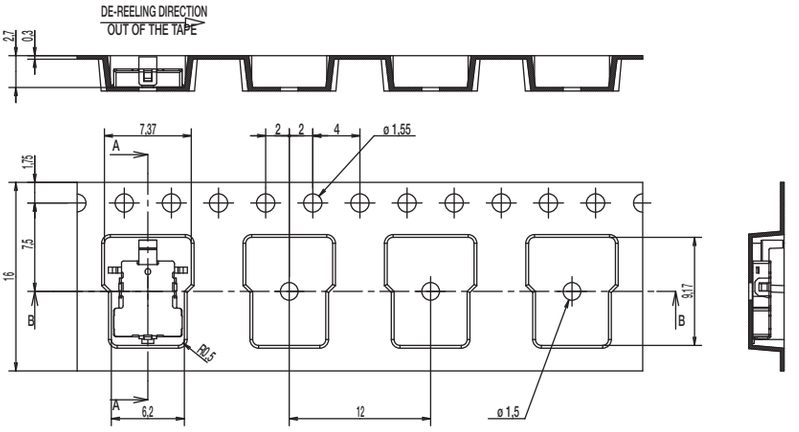

KSM6161 LFG

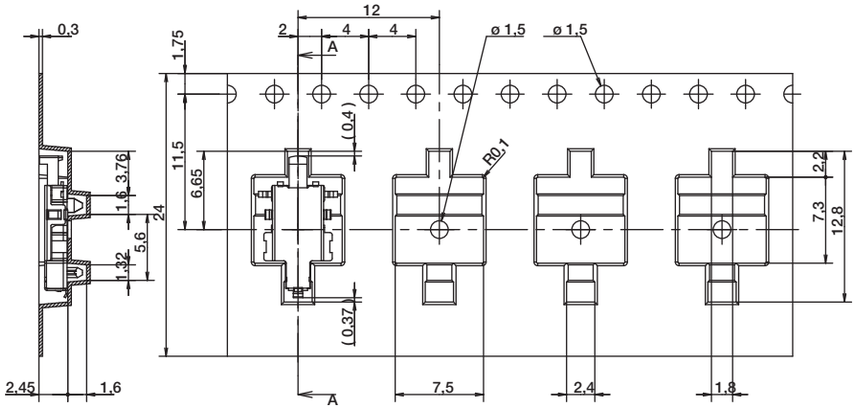

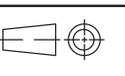

First Angle Projection

Dimensions are shown: mm
Specifications and dimensions subject to change

KSC4D Series
Sealed Detect Switch for SMT

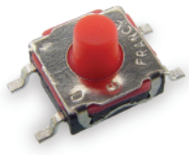

Features/Benefits

- ***Soft actuator***
- ***J or G terminations***
- ***Tape & reel***
- ***IP 67***
- ***RoHS compliant and compatible***

Typical Applications

- ***Automotive***
- ***Cellular phones***
- ***Industrial electronics***
- ***Computer infrastructure and IT***

Specification

FUNCTION: momentary action compatible with permanent actuation
CONTACT ARRANGEMENT: 1 make contact = SPST, N.O.
TERMINALS: J bend & Gullwing type for SMT
Compatible with permanent actuation

Mechanical

Type	Operating force FA Newtons	Operating life (operations)	Travel (mm)
KSC4D1J50SH	1,0 - 3,0	500,000	
KSC4D2J50SH	1,0 - 3,0	2,000,000	0,6 ± 0,25
KSC4D350SH	1,0 - 3,0	500,000	

Electrical

	Silver	Gold
MAXIMUM POWER:	1 VA	0.2 VA
MAXIMUM VOLTAGE:	32 VDC	32 VDC
MINIMUM VOLTAGE:	20 mV	20 mV
MAXIMUM CURRENT:	50 mA	10 mA
MINIMUM CURRENT:	1 mA	0.1 mA

DIELECTRIC STRENGTH (50 Hz, 1 min.): ≥ 250 V
CONTACT RESISTANCE: ≤ 100 mΩ
INSULATION RESISTANCE (100 V): ≥ 10^9 Ω
BOUNCE TIME: ≤ 1 ms

Electrical

	Silver	Gold
OPERATING TEMPERATURE:	-40˚C to 85˚C	-40˚C to 125˚C
STORAGE TEMPERATURE:	-55˚C to 85˚C	-55˚C to 125˚C

Process

SOLDERING:
- Infrared Reflow according to free soldering process with IEC 61760-1.

Packaging

Reels of 1,000 pieces. Dimensions of reels according to EIA RS481 or IEC 60286-3. External diameter 330 mm ± 2 mm.

NOTE: Part numbers listed above do not represent all possible configurations. For information on specific and custom switches, consult Customer Service Center.

This data sheet does not provide enough information for applications which require a certain level of quality or safety such as automotive, medical systems, safety equipment. Please contact your sales representative to get contractual specification package.

How To Order

Our easy build-a-switch concept allows you to mix and match options to create the switch you need. To order, select desired option from each category and place it in the appropriate box.

However, please note that all the combinations of these options are not feasible.
For any part number different from those listed above, please consult your local representative.

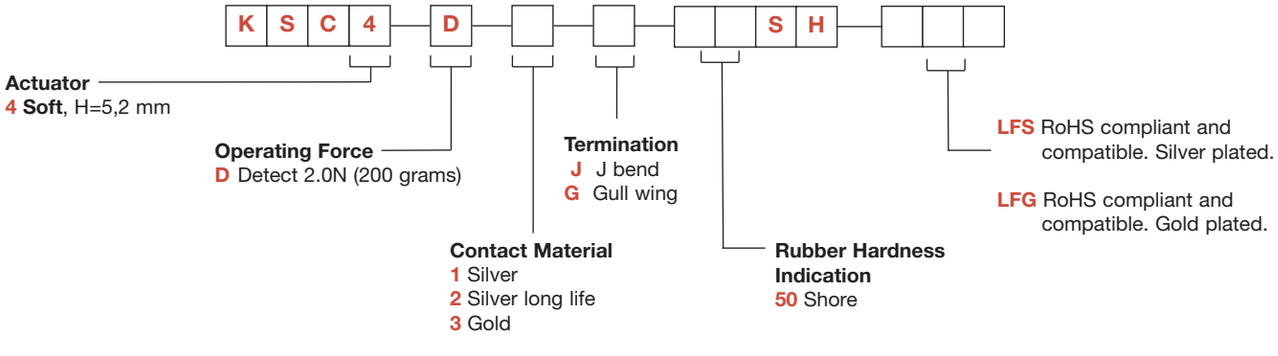

KSC4D1J SOFT, 5,2 mm high

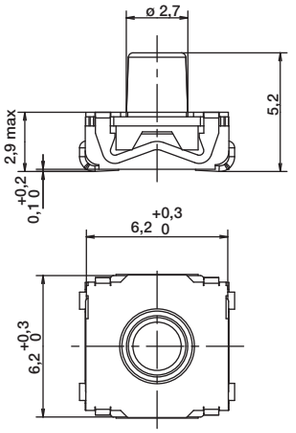

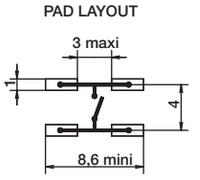

KSC4D1G SOFT, 5,2 mm high

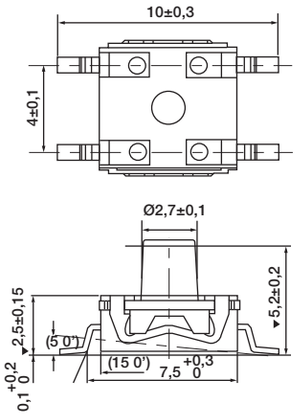

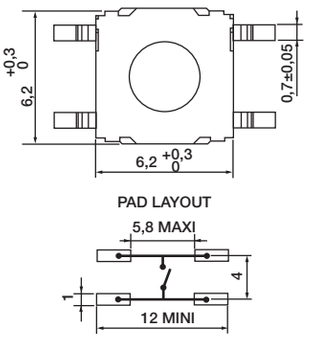

TAPE AND REEL

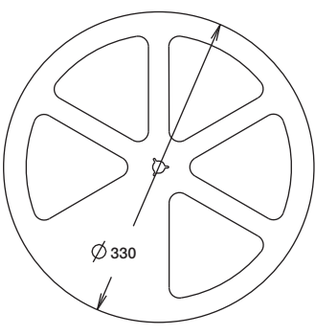

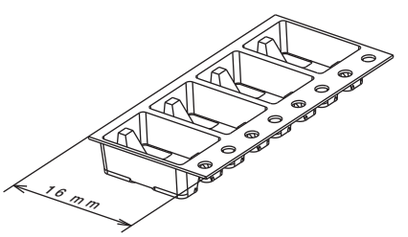

E
Detect

First Angle Projection

Dimensions are shown: mm
Specifications and dimensions subject to change

KSJ Detect Series
Spherical Actuator Detect Switches

Features/Benefits

- ***Straight or vertical detect***
- ***Top or side actuation***
- ***Spherical actuator allows actuation +/- 30˚***
- ***High travel***
- ***Adapted for cam actuation***
- ***Sealing IP60***

Typical Applications

- ***Automotive***
- ***Industrial electronics***
- ***Computer infrastructure and IT***

Specification

FUNCTION: momentary action
CONTACT ARRANGEMENT: 1 make contact = SPST, N.O.
TERMINALS: PC pins
Compatible with permanent actuation

Mechanical

Type	Operating force FA Newtons (grams)	Operating life (operations)	Travel
KSJ0VD1860SHLFT	6,0 (600)	100,000	0,50 ± 0,25
KSJ0MD1860SHLFT	6,0 (600)	100,000	0,50 ± 0,25

Electrical

	Silver	Gold
MAXIMUM POWER:	1 VA	0.2 VA
MINIMUM VOLTAGE:	20 mV	20 mV
MAXIMUM VOLTAGE:	32 VDC	32 VDC
MINIMUM CURRENT:	1 mA	1 mA
MAXIMUM CURRENT:	50 mA	10 mA

DIELECTRIC STRENGTH (50 Hz, 1 min.): ≥ 250 V
CONTACT RESISTANCE: ≤ 100 m ohms
INSULATION RESISTANCE (100 V): ≥ 10^9 ohms
BOUNCE TIME: ≤ 1 ms

Electrical

	Silver	Gold
OPERATING TEMPERATURE:	-40˚C to 85˚C	-40˚C to 125˚C
STORAGE TEMPERATURE:	-40˚C to 85˚C	-55˚C to 125˚C

Process

Wave soldering, compatible with lead free soldering.

Packaging

In boxes of 250 pieces

How To Order

Our easy build-a-switch concept allows you to mix and match options to create the switch you need. To order, select desired option from each category and place it in the appropriate box.

However, please note that all the combinations of these options are not feasible.
For any part number different from those listed above, please consult your local representative.

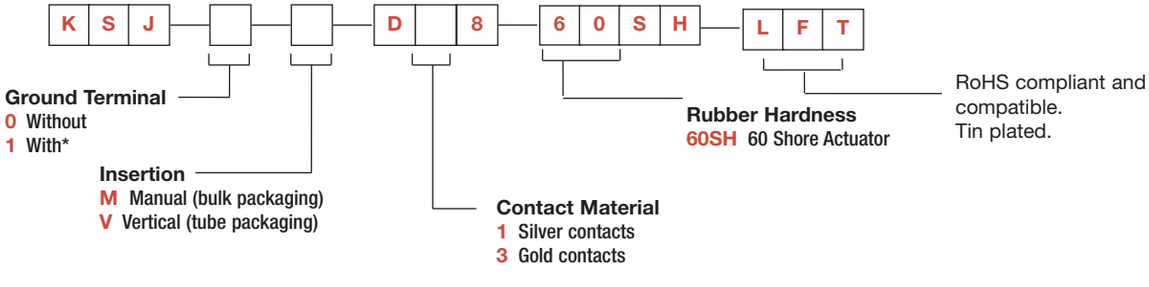

***Note**: "1" ground terminal option not available with "V" version.
The bracket for the "V" version plays this role.

KSJ

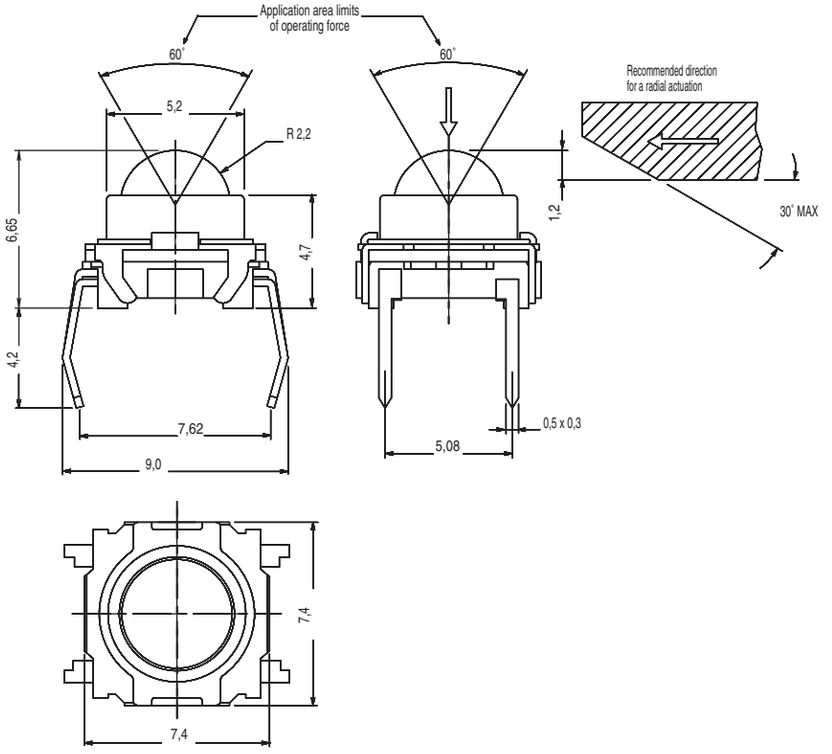

INSERTION

M MANUAL

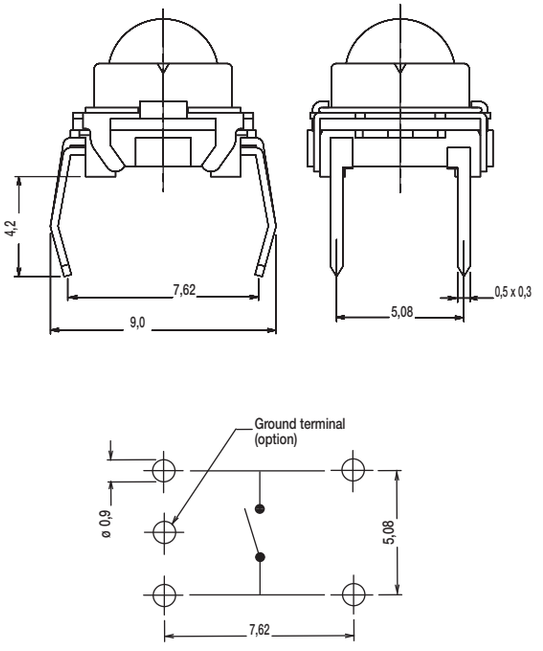

V VERTICAL

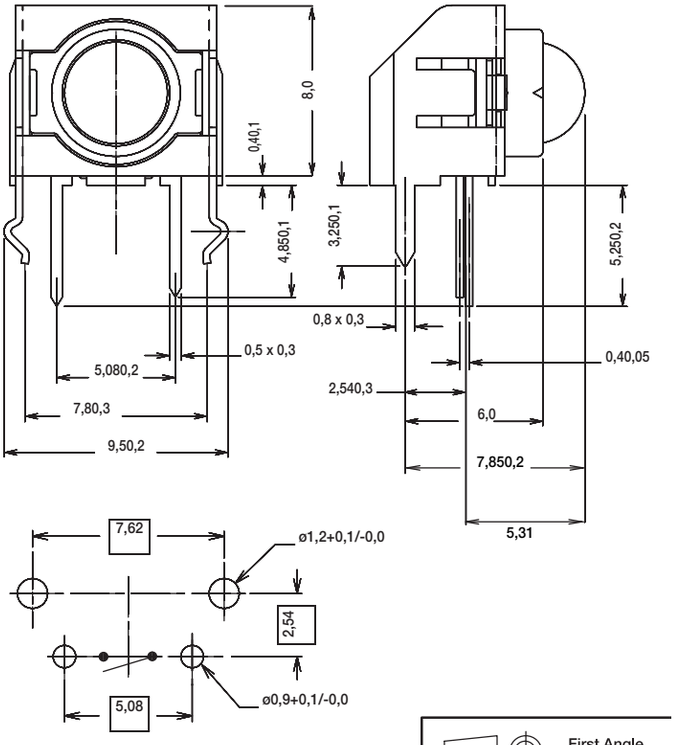

First Angle
Projection

Dimensions are shown: mm
Specifications and dimensions subject to change

RB Series
Rolling Ball Sensor Switch

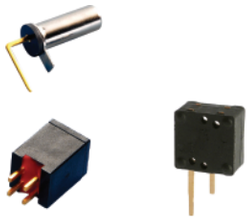

Features/Benefits

- ***Different angle options to trigger***
- ***Ultra miniature design***
- ***Patent awarded***

Typical Applications

- ***Household goods***
- ***Electronic toys***
- ***Consumer electronics including irons, portable heaters, games, toys***
- ***Safety and security controls***

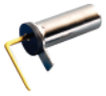

PART NUMBER	PACKAGING
RB-231X2	1,000 pieces

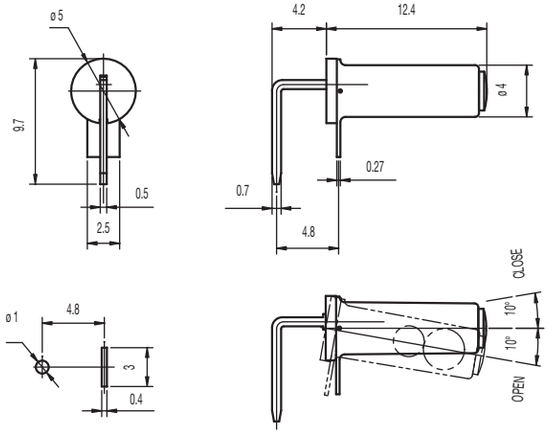

PCB LAYOUT

Specifications

CONTACT ARRANGEMENT: SPST

SENSOR ANGLE: 0˚ to -10˚ scope inside, terminal to disconnection electric current

MINIMUM VOLTAGE: 1 VDC 10mA (resistive load)

MAXIMUM VOLTAGE: 5 VDC 1mA (resistive load)

OPERATING LIFE: 100,000 cycles

INSULATION RESISTANCE: 1000 M Ω min. @ 100 VDC

DIELECTRIC STRENGTH: 500 V AC (50-60 Hz)

OPERATING TEMPERATURE: –20ºC to +70ºC

Materials

FRAME: Copper alloy, nickel plated

COVER: PA 46 (UL94V-0).

MOVABLE CONTACT: Copper alloy, nickel plated

TERMINALS: Copper alloy, gold plated

BRASS BALL: Brass, gold plated

PART NUMBER	PACKAGING
RB-220-07 R	500 pieces

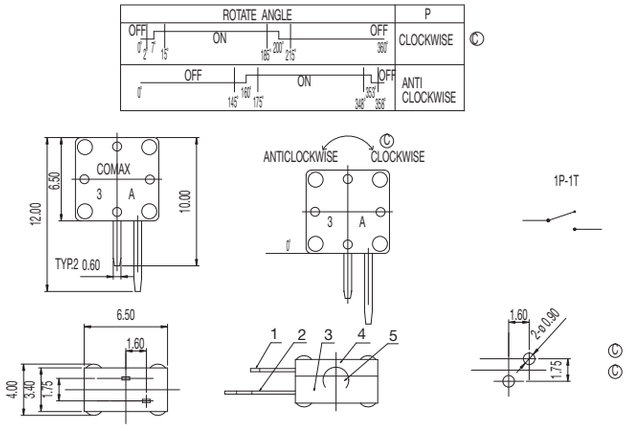

Specifications

CONTACT ARRANGEMENT: SPST

SENSOR ANGLE: 15˚ to 90˚ scope inside, terminal to disconnection electric current

MINIMUM VOLTAGE: 1 VDC 10mA (resistive load)

MAXIMUM VOLTAGE: 5 VDC 1mA (resistive load)

OPERATING LIFE: 20,000 cycles (without load);

100,000 cycles with load

INSULATION RESISTANCE: 10 M Ω min. @ 100 VDC

DIELECTRIC STRENGTH: 100 V AC (50-60Hz)

OPERATING TEMPERATURE: –10ºC to +50ºC

Materials

HOUSING: PA

COVER: PA

BALL: Gold plated

PART NUMBER	PACKAGING
RB-435B	500 pieces

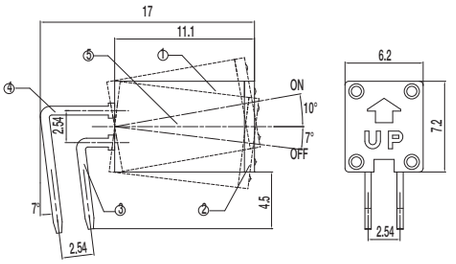

1P-2T

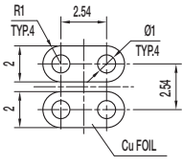

PIERCING PLAN

Specifications

CONTACT ARRANGEMENT: SPDT
MINIMUM VOLTAGE: 1 VDC 10mA (resistive load)
MAXIMUM VOLTAGE: 5 VDC 1mA (resistive load)
OPERATING LIFE: 100,000 cycles
INITAL CONTACT RESISTANCE: 5 Ω max.
INSULATION RESISTANCE: 1000 M Ω min. @ 500 VDC
DIELECTRIC STRENGTH: 500 V AC (50-60 Hz)
OPERATING TEMPERATURE: –20ºC to +70ºC

Materials

HOUSING: PA (UL94V-0)
COVER: PA (UL94V-0)
MOVABLE CONTACT: Copper alloy, nickel plated
TERMINALS: Gold plated
BALL: Steel, gold plated

PART NUMBER	PACKAGING
RB-435X2-20	500 pieces

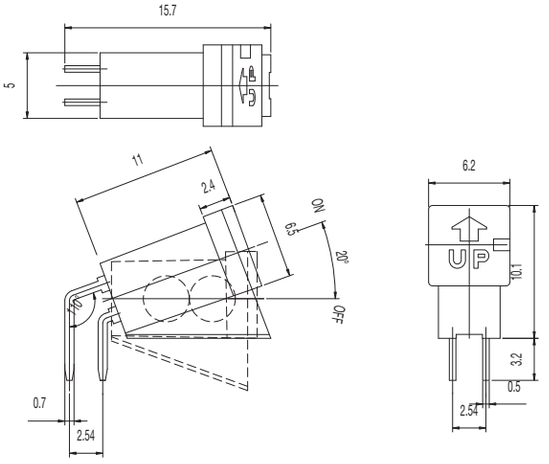

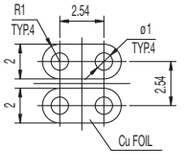

PCB LAYOUT

Specifications

CONTACT ARRANGEMENT: SPDT
SENSOR ANGLE: -20˚ to -30˚ scope inside, terminal to disconnection electric current
MINIMUM VOLTAGE: 1 VDC 10mA (resistive load)
MAXIMUM VOLTAGE: 5 VDC 1mA (resistive load)
OPERATING LIFE: 100,000 cycles
INSULATION RESISTANCE: 1000 M Ω min. @ 100 VDC
DIELECTRIC STRENGTH: 500 V AC (50-60 Hz)
OPERATING TEMPERATURE: –20ºC to +70ºC

Materials

HOUSING: PBT (UL94V-0)
COVER: PBT (UL94V-0)
TERMINALS: Gold plated
BALL: Steel, gold plated

Dimensions are shown: mm
Specifications and dimensions subject to change

RB Series
Rolling Ball Sensor Switch

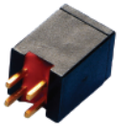

PART NUMBER	PACKAGING
RB-441-45	500 pieces

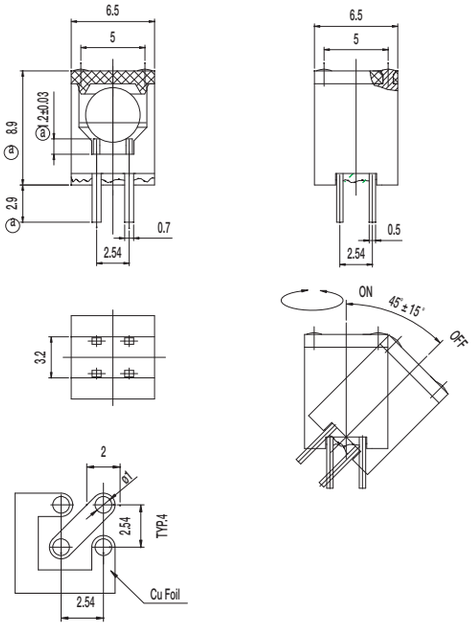

PCB LAYOUT

Specifications

CONTACT ARRANGEMENT: SPDT
MAXIMUM VOLTAGE: 24 VDC 25mA (resistive load)
OPERATING LIFE: 100,000 cycles
INSULATION RESISTANCE: 1000 M Ω min. @ 100 VDC
DIELECTRIC STRENGTH: 500 V AC (50-60 Hz)
OPERATING TEMPERATURE: –20ºC to +70ºC

Materials

HOUSING: PBT (UL94V-0)
COVER: PBT (UL94V-0)
TERMINALS: Gold plated
BALL: Gold plated

Features/Benefits

- ***Normally closed function***
- ***Vertical detect***
- ***Reliable long time compression***
- ***IP54***
- ***Tape & reel***
- ***RoHS compliant and compatible***

Typical Applications

- ***Smart meters***
- ***Alarm systems***
- ***Anti-tamper devices***

Specifications

FUNCTION: Momentary action.
CONTACT TYPE: SPST Normally Closed.
TERMINALS: Gullwing type for SMT.

Mechanical

SWITCHING FORCE: ≤ 2 N
TRAVEL TO BREAK: 0,7 mm
TOTAL TRAVEL: 1,1 mm

Packaging

Switches are delivered on continuous tape, in reels of 2,000 pieces

Electrical	GOLD	SILVER
MAXIMUM POWER:	0.2 VA	1 VA
MAXIMUM VOLTAGE:	32 VDC	32 VDC
MINIMUM VOLTAGE:	20 mVDC	20 mVDC
MAXIMUM CURRENT:	10 mA	50 mA
MINIMUM CURRENT:	1 µA	1 mA
CONTACT RESISTANCE:	≤ 350 mΩ	
INSULATION RESISTANCE:	> 1 G Ω	
DIELECTRIC STRENGTH:	≥ 250 Vrms	

Environmental	GOLD	SILVER
OPERATING TEMPERATURE:	–40°C to +125°C	–40°C to +85°C
STORAGE TEMPERATURE:	–55°C to + 125°C	–40°C to +85°C

Process

SOLDERING: Compatible with lead free reflow process

NOTE: Specifications listed above are for switches with standard options.
For information on specific and custom switches, consult Customer Service Center.

Build-A-Switch

To order, simply select desired option from each category and place in the appropriate box. Available options are shown and described on the next page. For additional options not shown in catalog, consult Customer Service Center.

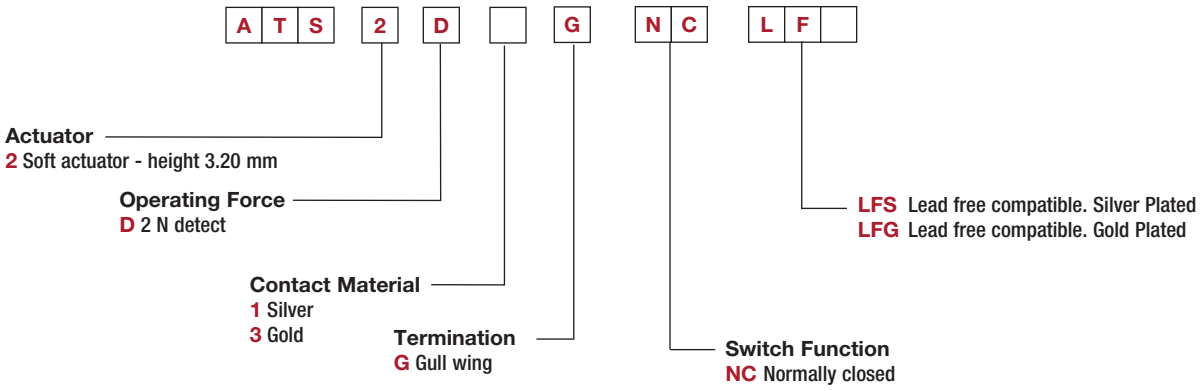

NEW

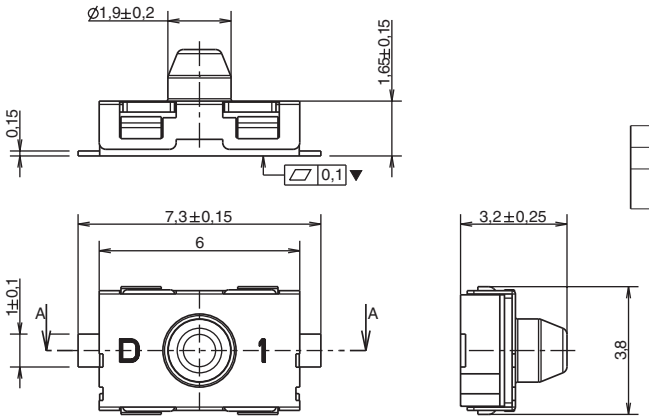

MARKING	PART NUMBER
D - 1	ATS 2D1G NC LFS
D - 3	ATS 2D3G NC LFG

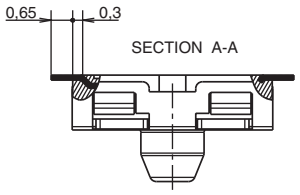

Recommended PCB layout

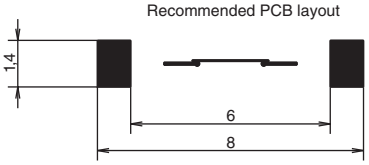

SECTION B-B

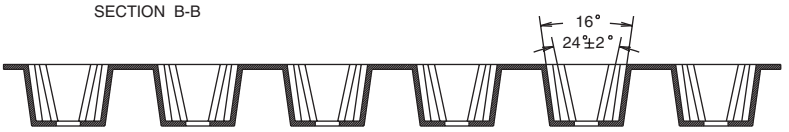

SECTION C-C

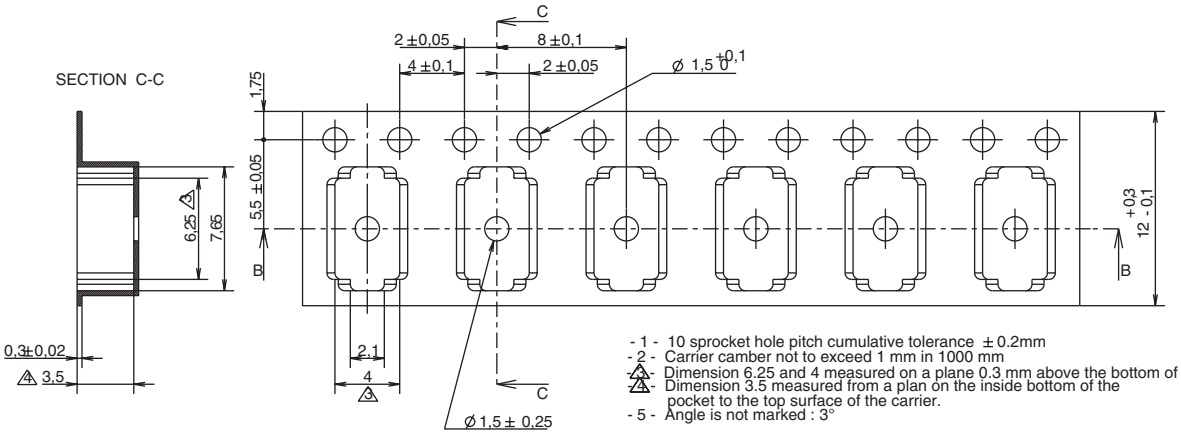

- 1 - 10 sprocket hole pitch cumulative tolerance ± 0.2mm
- 2 - Carrier camber not to exceed 1 mm in 1000 mm
- 3 - Dimension 6.25 and 4 measured on a plane 0.3 mm above the bottom of the pocket
- 4 - Dimension 3.5 measured from a plan on the inside bottom of the pocket to the top surface of the carrier.
- 5 - Angle is not marked : 3°

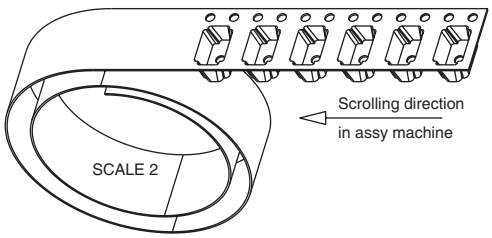

Features/Benefits

- ***Automotive grade***
- ***Long 2.5 mm travel***
- ***Quiet operation***
- ***300,000 electrical cycles***
- ***IP67***

Typical Applications

- ***Automotive - electronic door latch***
- ***Automotive - electronic door handles***

Preliminary
8 June 16

Specifications

FUNCTION: SPST NO, or SPST NC

Mechanical

OPERATING FORCE:	1.5 N max.
FREE POSITION:	8.75 mm *
OPERATING POSITION:	7.25 mm *
FULL TRAVEL POSITION:	6.25 mm *
MECHANICAL LIFE:	300,000 cycles min.
MAX. OVERLOAD FORCE:	20 N down

* from post center

Electrical

MINIMUM RATING:	1mA 5 VDC (silver plated contacts)
MAXIMUM RATING:	250mA 14 VDC (silver contacts)
ELECTRICAL LIFE:	300,000 cycles min.
CONTACT RESISTANCE:	500 mΩinitial / 1 m Ω max.
INSULATION RESISTANCE:	100 M Ω min.
DIELECTRIC STRENGTH:	250 V min.

Materials

FIXED CONTACTS / TERMINALS: Phosphor bronze / Silver plated
MOVABLE CONTACTS: Phosphor bronze; silver plate
BASE: PBT
COVER: PBT
ACTUATOR: Acetal

Environmental

OPERATING TEMPERATURE: – 40°C to +85°C
STORAGE TEMPERATURE: – 50°C to +95°C

Process

SOLDERING: Hand solder 300°C, 3s max.

Packaging

Switches are delivered in tray.

NOTE: Specifications listed above are for switches with standard options.
For information on specific and custom switches, consult Customer Service Center.

Build-A-Switch

To order, simply select desired option from each category and place in the appropriate box. Available options are shown and described on the next page. For additional options not shown in catalog, consult Customer Service Center.

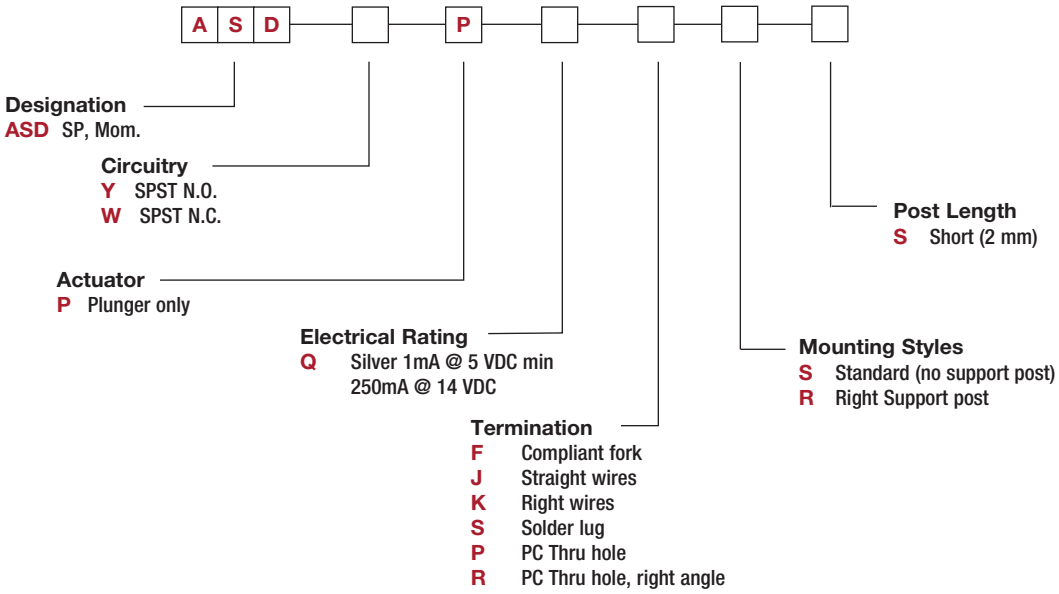

Preliminary
8 June 16

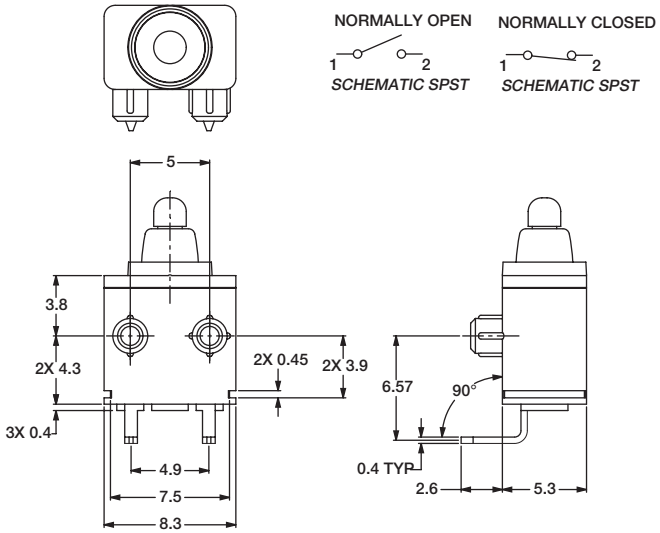

ACTUATOR

P PLUNGER ONLY

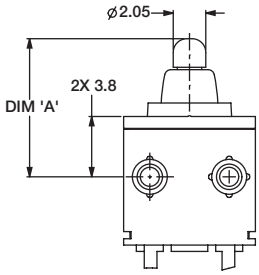

	DIM 'A'
FREE POSITION	8.75
BREAK	7.25
FULL TRAVEL	6.25

TERMINATIONS

F COMPLIANT FORK

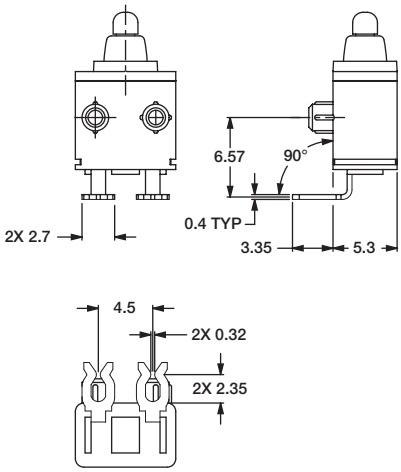

J STRAIGHT WIRES

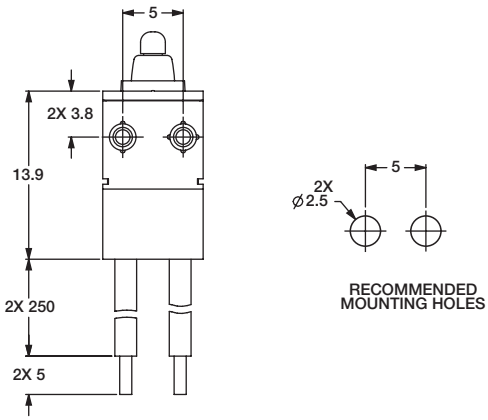

Dimensions are shown: mm
Specifications and dimensions subject to change

TERMINATIONS

K RIGHT WIRES

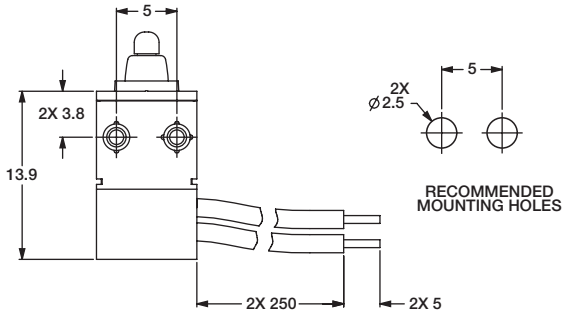

S SOLDER LUG

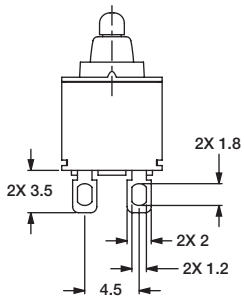

P PC THRU-HOLE

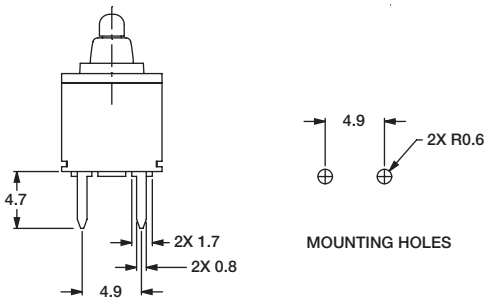

R PC THRU-HOLE - RIGHT ANGLE

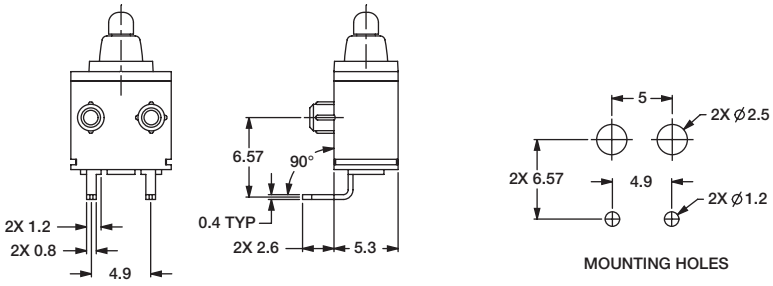

MOUNTING STYLE

S STANDARD (NO SUPPORT POST)

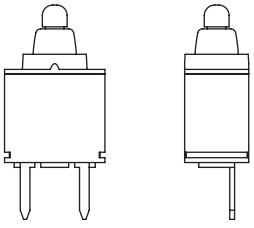

R RIGHT SUPPORT POST

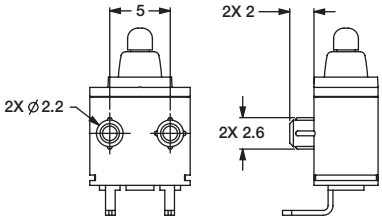

Toggles
Product Selection Guide

Toggles							
Series	**7000**	**Military**	**E**	**ET**	**T**	**GT**	**9000**
Switch Type	Miniature	Miniature	Miniature	Subminiature	Subminiature	Ultraminiature	Power
Poles/Throws	SPDT, DPDT, 3PDT, 4PDT	SPDT, DPDT,	SPDT, DPDT, 3PDT	SPST, SPDT, DPDT	SPST, SPDT, DPDT	SPST, SPDT, DPST, DPDT	DPDT
Maximum Current Silver/Gold	5 Amps	5 Amps	7.5 Amps/ 5 Amps	3 Amps/ 2 Amps	3 Amps/ 2 Amps	0.4 VA	10 Amps
Process Sealed			•	•		•	
PCB Mount Options							
Vertical	•	•	•	•	•	•	•
Right Angle	•	•	•	•	•	•	
Vertical Right Angle	•	•	•	•	•	•	•
Surface Mount Options							
Vertical						•	
Right Angle				•		•	
Panel Mount Options							
Rear Mount	•	•	•		•		•
Termination Options							
PCB Thru-hole	•	•	•	•	•	•	•
Wire Wrap	•		•	•	•		
Solder Lug	•	•	•		•		•
Quick Connect	•		•				•
Other Available Options							
Support Brackets	•	•	•	•	•	•	•
Snap-in Retention	•		•	•			
ESD Protection	•		•	•	•		
Tape & Reel				•		•	
Bushing Options							
10-48					•		
1/4-40	•	•	•		•		•
15/32	•						•
M6P 0.75 (Metric)	•						
Page No.	F–3	F–17	F–22	F–30	F–37	F–43	F–48

7000 Series
Miniature Toggle Switches

Features/Benefits

- ***Multi-pole and multi-position***
- ***Wide variety of actuator and termination options***
- ***Epoxy terminal-seal compatible with bottom wash cleaning***
- ***RoHS complaint models available***

Typical Applications

- ***Telecommunications***
- ***Instrumentation***
- ***Medical equipment***

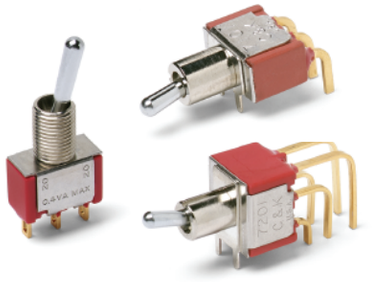

Specifications

CONTACT RATING: B contact material: 0.4 VA max. @ 20 V AC or DC max. Q contact material: 5 AMPS @ 120 V AC or 28 V DC; 2 AMPS @ 250 V AC. See page F-15 for additional ratings.

ELECTRICAL LIFE: 7X01 and UX1 models: 100,000 make-and-break cycles at full load. All other models: 40,000 cycles.

CONTACT RESISTANCE: Below 10 m Ω typ. initial @ 2-4 V DC, 100 mA, for both silver and gold plated contacts.

INSULATION RESISTANCE: 10^9 Ω min.

DIELECTRIC STRENGTH: 1000 Vrms min. @ sea level.

OPERATING TEMPERATURE: –30°C to 85°C.

SOLDERABILITY: Per MIL-STD-202F method 208D, or EIA RS-186E method 9 (1 hour steam aging).

For materials see page F-4.

NOTE: Any models supplied with P, S R, Q, B or G contact material are RoHS compliant and compatible.

NOTE: Specifications listed above are for switches with standard options. For information on specific and custom switches, consult Customer Service Center.

Build-A-Switch

To order, simply select desired option from each category and place in the appropriate box. Available options are shown and described on pages F–4 thru F–16. For additional options not shown in catalog, consult our Customer Service Center.

Switch Function

7101 SP On-None-On
7103 SP On-Off-On
7105 SP Mom.-Off-Mom.
7107 SP On-Off-Mom.
7108 SP On-None-Mom.
7109 SP None-On-Mom.
7201 DP On-None-On
7203 DP On-Off-On
7205 DP Mom.-Off-Mom.
7207 DP On-Off-Mom.
7208 DP On-None-Mom.
7211 DP On-On-On
7213 DP On-On-Mom.
7215 DP Mom.-On-Mom.
7301 3P On-None-On
7303 3P On-Off-On
7305 3P Mom.-Off-Mom.
7308 3P On-None-Mom.
7401 4P On-None-On
7403 4P On-Off-On
7405 4P Mom.-Off-Mom.
7408 4P On-None-Mom.
7411 4P On-On-On
7413 4P On-On-Mom.
7415 4P Mom.-On-Mom.

Note: UL models available, see pages F-4 & F-5.

Actuator

M .200" high
P3 Flatted, anti-rotation, .450" high
S .420" high
T .687" high, 15/32 bushing
K2 Locking lever, .704" high
K9 Locking lever, .704" high
K12 Locking lever, .732" high
K19 Locking lever, .732" high
L .840" high
L1 .640" high
L1P Anti-rotation, .640" high
L2 .550" high
L2P Anti-rotation, .550" high
L3 Plastic .940" inch
L40 Lever handle without cap
L41 .531" high lever handle with cap
L42 .838" high lever handle with cap
MP Anti-rotation, .200" high
P1 Flatted, anti-rotation, .840" high
P4 Flatted, anti-rotation, .250" high
SP Anti-rotation, .420" high
T1 .487" high, 15/32 bushing
T1P Anti-rotation, .487" high, 15/32 bushing
T2P Flatted, anti-rotation, .610" high, 15/32 bushing,
TP Anti-rotation, .687" high, 15/32 bushing

Bushing

D .280 high, keyway
H .296 high, flat
Y .350 high, keyway
NONE No bushing choice required
CW Splashproof
D8 .280" high, flat
D9 .280" high, keyway
H3 .315" high, keyway
H4 8mm high, keyway
Y1 .378" high, keyway
Y3 8.9mm high, keyway
Y4 .378" high, flat
Y9 .350" high, keyway

Terminations

A Right angle, PC thru-hole
AV2 Vert. right angle, PC thru-hole
C PC Thru-hole
V3 .460 high, V-bracket
Z Solder lug
A2 Right angle, PC thru-hole
A3 Right angle, PC thru-hole
A4 Right angle, PC thru-hole
AW1 Right angle, extended, PC thru-hole
AW4 Right angle, extended, PC thru-hole
V2 .555" high, V-bracket
V4 .630" high, V-bracket
V6 .460" high, V-bracket
V7 .630" high, V-bracket
V8 .953" high, V-bracket
V9 1.150" high, V-bracket
V21 .555" high, snap-in V-bracket
V31 .460" high, snap-in V-bracket
V41 .630" high, snap-in V-bracket
V71 .630" high, snap-in V-bracket
V81 .953" high, snap-in V-bracket
W .750" long, wire wrap
W1 .964" long, wire wrap
W3 .425" long, wire wrap
W4 1.062" long, wire wrap
W5 1.305" long, wire wrap
Z3 Quick connect

Contact Material

B Gold
P Gold, matte-tin
Q Silver
S Silver, matte-tin
G Gold over silver
R Gold over silver, matte-tin

Seal

E Epoxy
I Epoxy potted base

Actuator Color/Finish

NONE Bright chrome
2 Black
3 Red
S Satin chrome

KXX Actuator Color/Finish

NONE Natural aluminum
2 Black anodized aluminum
3 Red anodized aluminum
7 Blue anodized aluminum

Bushing Finish

NONE Nickel on all bushings (except D8, satin chrome)
2 Black

Dimensions are shown: Inches (mm)
Specifications and dimensions subject to change

7000 Series
Miniature Toggle Switches

Materials

CASE: Glass filled nylon 6/6, flame retardant, heat stabilized, or diallyl phthalate (DAP) (UL 94V-0).

ACTUATOR: Brass, chrome plated.

BUSHING: Brass or zinc, nickel plated.

HOUSING: Stainless steel.

SWITCH SUPPORT: Brass or steel, tin plated.

END CONTACTS: B contact material: Copper alloy, with gold plate over nickel plate. Q contact material: Coin silver, silver plated. See page F-15 for additional contact materials.

CENTER CONTACTS & ALL TERMINALS: B contact material: Copper alloy, with gold plate over nickel plate. Q contact material: Copper alloy, silver plated. See above for additional contact materials.

TERMINAL SEAL: Epoxy.

HARDWARE: Nut & Locking Ring: Brass, nickel plated. Lockwasher: Steel, nickel plated.

NOTE: Materials listed above are for switches with standard options. For information on specific and custom switches, consult Customer Service Center.

SWITCH FUNCTION

NO. POLES	MODEL NO.	UL** MODEL NO.	SWITCH FUNCTION POS. 1 (KEYWAY)	SWITCH FUNCTION POS. 2 (KEYWAY)	SWITCH FUNCTION POS. 3 (KEYWAY)	CONNECTED TERMINALS POS. 1 (KEYWAY)	CONNECTED TERMINALS POS. 2 (KEYWAY)	CONNECTED TERMINALS POS. 3 (KEYWAY)	SCHEMATIC
SP	7101	U11	ON	NONE	ON	2-3	N/A	2-1	
	7103	U13	ON	OFF	ON	2-3	OPEN	2-1	
	7105	U15	MOM.	OFF	MOM.				
	7107	U17	ON	OFF	MOM.				
	7108	U18	ON	NONE	MOM.	2-3	N/A	2-1	
	7109	U19	NONE	ON	MOM.	N/A	2-3	2-1	SPDT

SPDT

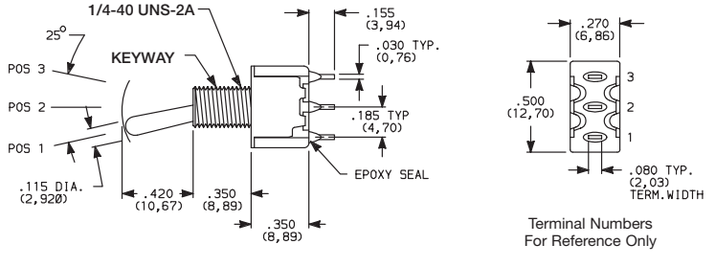

Terminal Numbers For Reference Only

Part number shown: 7101SYZBE

DP	7201	U21	ON	NONE	ON	2-3,5-6	N/A	2-1,5-4	
	7203	U23	ON	OFF	ON	2-3,5-6	OPEN	2-1,5-4	
	7205	U25	MOM.	OFF	MOM.				
	7207	U27	ON	OFF	MOM.				
	7208	U28	ON	NONE	MOM.	2-3,5-6	N/A	2-1,5-4	
	7211 *	U211*	ON	ON	ON	2-3,5-6	2-3,5-4	2-1,5-4	
	7213*	U213*	ON	ON	MOM.				
	7215*	U215*	MOM.	ON	MOM.				DPDT

DPDT

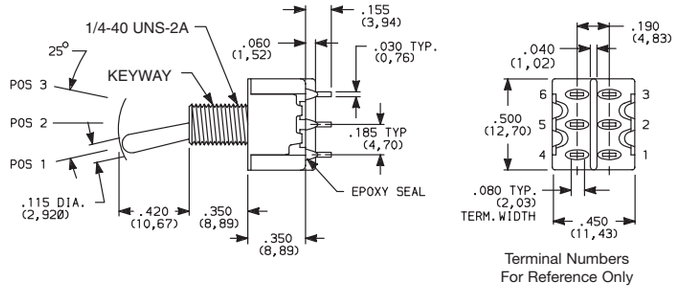

Terminal Numbers For Reference Only

Part number shown: 7201SYZQE

MOM. = Momentary

* Wiring for 3-way switch, see Section N.

** U11–U415 model nos. with all options when ordered with G, R, Q or S contact material.

Third Angle Projection

Dimensions are shown: Inches (mm)
Specifications and dimensions subject to change

SWITCH FUNCTION

NO. POLES	MODEL NO.	UL** MODEL NO.	SWITCH FUNCTION POS. 1 (KEYWAY)	SWITCH FUNCTION POS. 2 (KEYWAY)	SWITCH FUNCTION POS. 3 (KEYWAY)	CONNECTED TERMINALS POS. 1 (KEYWAY)	CONNECTED TERMINALS POS. 2 (KEYWAY)	CONNECTED TERMINALS POS. 3 (KEYWAY)	SCHEMATIC
3P	7301	U31	ON	NONE	ON	2-3,5-6,8-9	N/A	2-1,5-4,8-7	3PDT
	7303	U33	ON	OFF	ON	2-3,5-6,8-9	OPEN	2-1,5-4,8-7	
	7305	U35	MOM.	OFF	MOM.				
	7307	U37	ON	OFF	MOM.				
	7308	U38	ON	NONE	MOM.	2-3,5-6,8-9	N/A	2-1,5-4,8-7	

3PDT

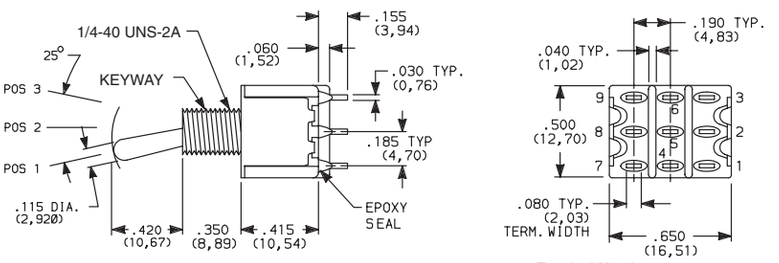

Terminal Numbers For Reference Only

Part number shown: 7301SYZQE

NO. POLES	MODEL NO.	UL** MODEL NO.	SWITCH FUNCTION POS. 1 (KEYWAY)	SWITCH FUNCTION POS. 2 (KEYWAY)	SWITCH FUNCTION POS. 3 (KEYWAY)	CONNECTED TERMINALS POS. 1 (KEYWAY)	CONNECTED TERMINALS POS. 2 (KEYWAY)	CONNECTED TERMINALS POS. 3 (KEYWAY)	SCHEMATIC
4P	7401	U41	ON	NONE	ON	2-3,5-6,8-9,11-12	N/A	2-1,5-4,8-7,11-10	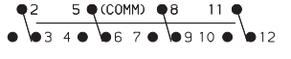 4PDT
	7403	U43	ON	OFF	ON	2-3,5-6,8-9,11-12	OPEN	2-1,5-4,8-7,11-10	
	7405	U45	MOM.	OFF	MOM.				
	7408	U48	ON	NONE	MOM.	2-3,5-6,8-9,11-12	N/A	2-1,5-4,8-7,11-10	
	7411*	U411*	ON	ON	ON	2-3,5-6,8-9,11-12	2-3,5-4,8-9,11-10	2-1,5-4,8-7,11-10	
	7413*	U413*	ON	ON	MOM.				
	7415*	U415*	MOM.	ON	MOM.				

4PDT

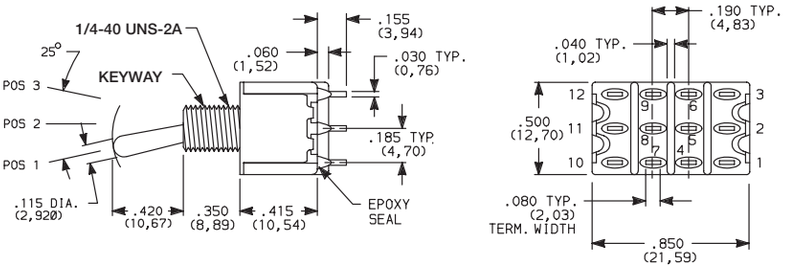

Terminal Numbers For Reference Only

Part number shown: 7401SYZQE

MOM. = Momentary

Wiring for 3-way switch, see Section N.

** U11–U415 model nos. c UL us with all options when ordered with G, Q, R or S contact material.

F

Toggle

Third Angle Projection

Dimensions are shown: Inches (mm)
Specifications and dimensions subject to change

7000 Series
Miniature Toggle Switches

ACTUATOR

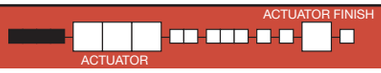

S .420" HIGH [1]

SP ANTIROTATION, .420" HIGH [2,3]

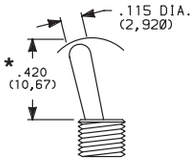

S actuator standard when ordered with C, W-W5, Z & Z3 terminations.
Caps are available separately, see page F-16.

M .200" HIGH [1]

MP ANTIROTATION, .200" HIGH [2,3]

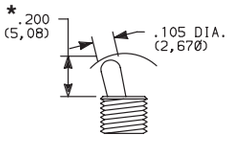

M actuator standard when ordered with all terminations except C, W-W5, Z & Z3.
Caps are available separately, see page F-16.

L, L1, L2 .840", .640", .550" HIGH [1]

L1P, L2P ANTIROTATION, .840", .640", .550" HIGH [2,3]

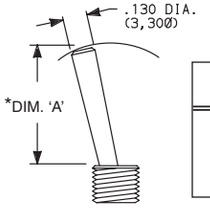

OPTION CODE	DIM 'A'
L	.840 (21,34)
L1, L1P	.640 (16,26)
L2, L2P	.550 (13,97)

Caps are available separately, see page F-16.

***P1** FLATTED WITH ANTIROTATION, .840" HIGH [2,3]

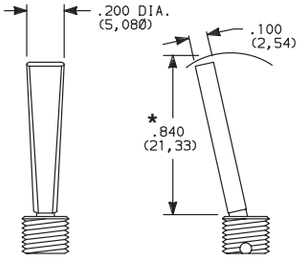

***P3** FLATTED WITH ANTIROTATION, .450" HIGH [2,3]

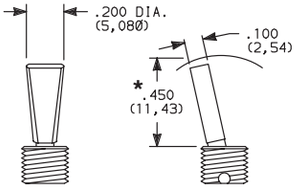

***P4** FLATTED WITH ANTIROTATION, .250" HIGH [2,3]

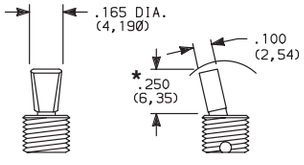

*Dress nut part number 709901201 supplied standard with threaded bushing. (Part number 709903201 with metric threaded bushings.)

T .687 (17,45) HIGH [1,2]

TP ANTIROTATION, .687 (17,45) HIGH, 15/32 BUSHING [1,2,3]

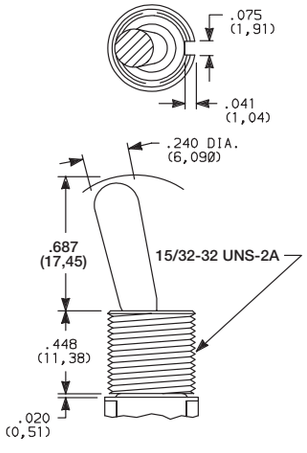

Bushing option code not required unless CW splashproof bushing ordered. TP & T1P actuators not available with CW splashproof bushing. All TXX actuators not available on single pole models with A-A4, AW1-AW4 terminations.

T1 .487 (12,37) HIGH [1,2]

T1P ANTIROTATION, .487 (12,37) HIGH, 15/32 BUSHING [1,2,3]

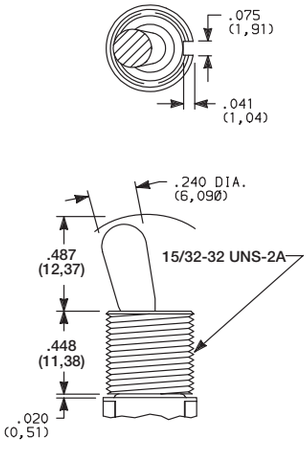

T2P FLATTED, ANTIROTATION, .610" HIGH, 15/32 BUSHING [1,2,3]

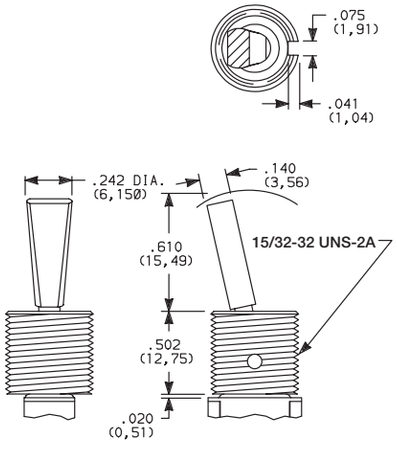

Bushing option code not required. T2P actuator not available with CW splashproof bushing or single pole models with A-A4, AW1-AW4 terminations.

[1] L, L1, L2, M, S & TXX actuators not available with Y1 bushing.

[2] L1P, L2P, MP, P1, P3, P4, SP & TXX actuators not available with D8 & H4 bushing.

[3] Antirotation: Provides anti-'push-in' feature on actuator.

* Add .070 (1,78) for D, D8 & D9 bushings, subtract .020 (0,51) for H3 bushing.

OPTION CODE	ACTUATOR FINISH
NONE	BRIGHT CHROME-With Nickel Plated Bushing
2	BLACK
S	SATIN CHROME

NOTE: Black hardware is supplied when either black actuators or bushings are specified. For additional hardware, see Section N.

Third Angle Projection

Dimensions are shown: Inches (mm)
Specifications and dimensions subject to change

ACTUATOR

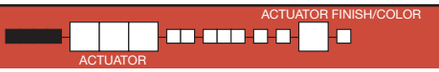

K2 LOCKING LEVER, .704" HIGH (threaded)

K9 LOCKING LEVER, .704" HIGH (unthreaded)

K12 LOCKING LEVER, .732" HIGH (threaded)

K19 LOCKING LEVER, .732" HIGH (unthreaded)

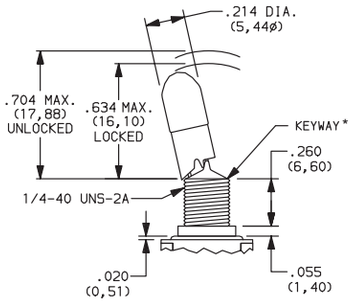

Replaces K, K8

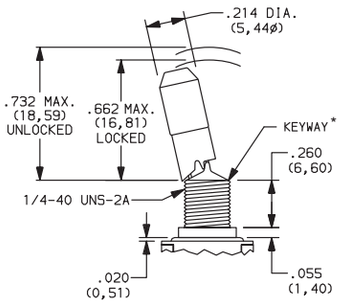

Replaces K1, K18

OPTION CODE	ACTUATOR CAP FINISH
NONE	NATURAL ALUMINUM–With Nickle Plated Bushing
2	BLACK ANODIZED ALUMINUM
3	RED ANODIZED ALUMINUM
7	BLUE ANODIZED ALUMINUM

* All KXX models including KXXCW have a keyway

Locking Positions

–01 Models 2 Position lock | –03 & –11 Models 3 Position lock | –05, –09 & –15 Models 1 Position lock | –07 & –13 Models 2 Position lock | –08 Models 1 Position lock

NOTE: To prevent accidental actuation, toggle must be lifted before being actuated. When released, toggle will lock in place. Overtightening mounting nut may cause actuator to bind.

Locking levers supplied with bushing shown.

Bushing option code not required unless CW splashproof bushing ordered.

L40 LEVER HANDLE WITHOUT CAP

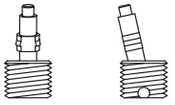

No color choice required

L41 PLASTIC LEVER HANDLE WITH ANTIROTATION AND CAP, P/N 4810

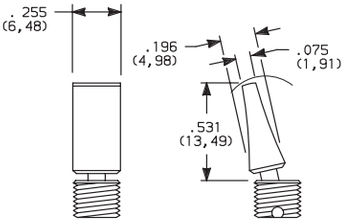

L42 PLASTIC LEVER HANDLE WITH ANTIROTATION AND CAP, P/N 4811

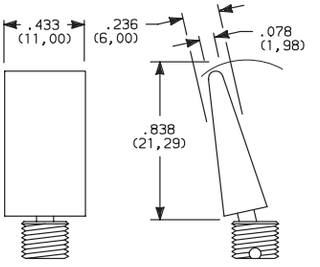

Finish: Matte (L41 & L42).

L3 PLASTIC .940" HIGH

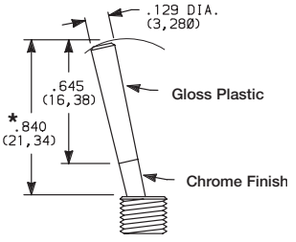

OPTION CODE	PLASTIC ACTUATOR COLORS
NONE	No Actuator Color (L40 option)
2	BLACK
3	RED

* Add .070 (1,78) for D, D8 & D9 bushings, subtract .020 (0,51) for H3 bushing.

NOTE: Lever handle for L41 & L42 actuators supplied, but not installed. For interchangeability, order L40 actuator option and lever handles separately, see page F-16. L4X actuators not available with H4, Y1, Y4 bushings. Antirotation: Provides anti-'push-in' feature on actuator.

Third Angle Projection

Dimensions are shown: Inches (mm)
Specifications and dimensions subject to change

7000 Series
Miniature Toggle Switches

BUSHING

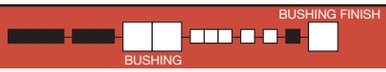

Y .350" HIGH, THREADED, KEYWAY

Y9 .350" HIGH, UNTHREADED, KEYWAY

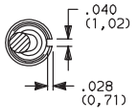

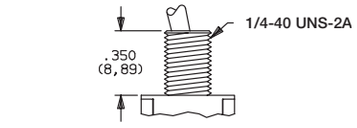

Y bushing standard with C, W-W5, Z or Z3 terminations.

NONE NO BUSHING

No bushing choice required with KXX, TXX actuators. (exception: Specify CW if splashproof bushing desired).

D .280" HIGH, THREADED, KEYWAY

D8 .280" HIGH, UNTHREADED, FLAT [3]

D9 .280" HIGH, UNTHREADED, KEYWAY

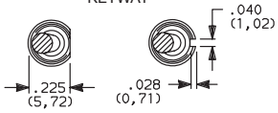

D8 D, D9

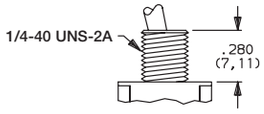

D9 bushing standard with all terminations except C, W-W5, Z or Z3. Add .070 (1,78) to all actuators lengths with D, D8 & D9 bushings.

H .296" HIGH, FLAT THREADED, HIGH TORQUE [1,2]

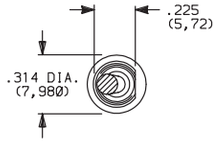

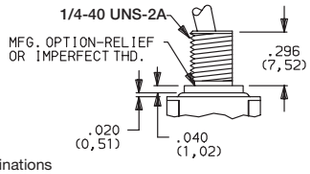

H3 .315" HIGH, KEYWAY THREADED, HIGH TORQUE [1,2]

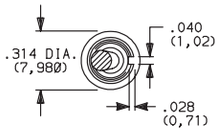

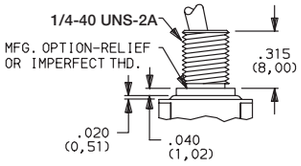

Subtract .020 (0,51) from all actuator lengths for H3 bushing.

H4 8mm HIGH, KEYWAY, THREADED, METRIC HIGH TORQUE [1,2,3]

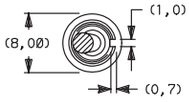

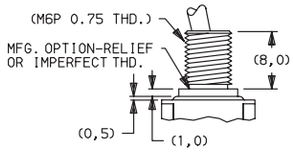

Y1 .378" HIGH, KEYWAY, THREADED, HIGH TORQUE [1,2,4]

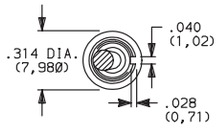

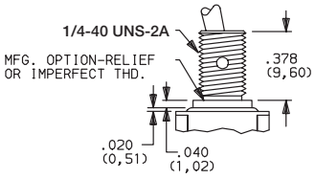

Y3 8.9mm HIGH, KEYWAY, THREADED, METRIC

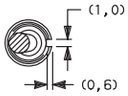

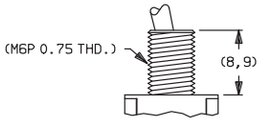

Y4 .378" HIGH, FLAT, THREADED, HIGH TORQUE [1,2,5]

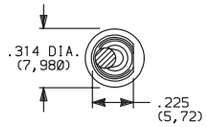

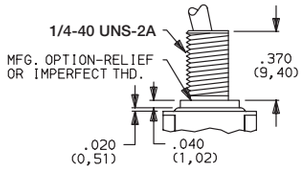

CW THREADED, SPLASHPROOF [1,2]

For T & T1 actuators.

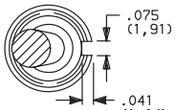

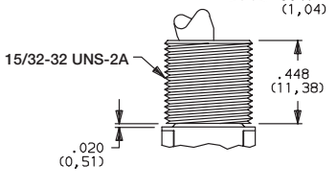

IP67 Degree of protection, totally protected against dust, full-scale voltage protection, temporary immersion. Internal actuator seal standard.
External bushing seal available separately from APM Hexseal, part # MFS-60064.

For actuators other than T, T1 and KXX.

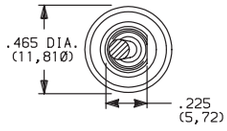

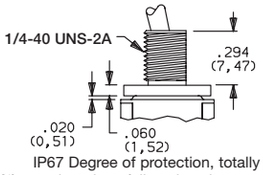

IP67 Degree of protection, totally protected against dust, full-scale voltage protection, temporary immersion. Internal actuator seal and external bushing seal washer standard. IP65 degree of protection for LXP, MP, PX or SP with CW option.

OPTION CODE	BUSHING FINISH
NONE	NICKEL on all bushings except 'D8' satin chrome.
2	BLACK

[1] **Will withstand 12 in.-lbs. of torque with no distortion.**
[2] CW. H, H3, H4, Y1 & Y4 bushings not available on single pole models with A4 terminations.
[3] D8 & H4 bushings available only with L, L1, L2, M & S actuators.
[4] Y1 bushing available only with LXP, MP, PX & SP actuators.
[5] Y4 bushing not available with L4X actuators.

NOTE: Two mounting nuts, locking ring and lockwasher supplied standard with threaded bushings. Black hardware is supplied when either black bushings or actuators are specified. Optional mounting nut and locking ring styles and finishes available, see Section N.

PANEL MOUNTING

1/4 INCH BUSHING

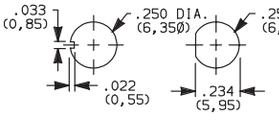

Without locking ring. With standard locking ring.

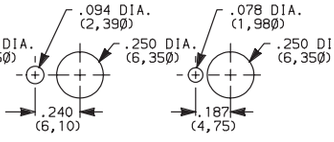

With small locking ring.

METRIC BUSHING

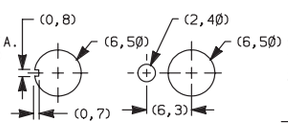

Without locking ring. With locking ring.

15/32 INCH BUSHING

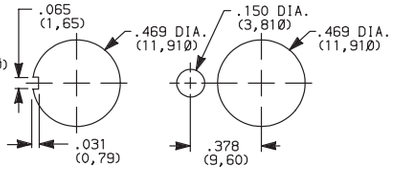

Without locking ring. With standard locking ring.

Third Angle Projection

Dimensions are shown: Inches (mm)
Specifications and dimensions subject to change

TERMINATIONS

Z SOLDER LUG

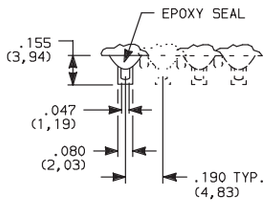

.030 (0,76) Thk.

SPDT thru 4PDT

Not available with P, R or S contact materials.

C PC THRU-HOLE

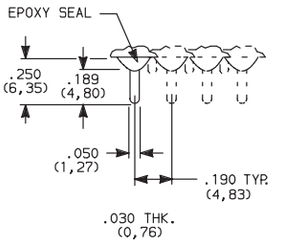

PC MOUNTING

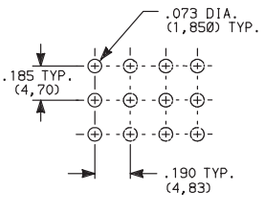

SPDT thru 4PDT

Z3 QUICK CONNECT

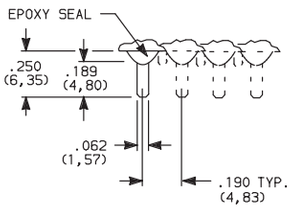

.030 (0,76) Thk.

SPDT thru 4PDT

Not available with P, R or S contact materials.
Mating quick connector available, order part number 530100000, page F-16.

W, W1, W3, W4, W5 WIRE WRAP

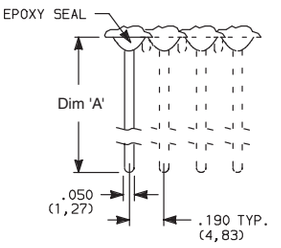

.030 (0,76) Thk.

OPTION CODE	DIM 'A'
W	.750 (19,05)
W1	.964 (24,48)
W3	.425 (10,80)
W4	1.062 (26,97)
W5	1.305 (33,15)

SPDT thru 4PDT

A RIGHT ANGLE, PC THRU-HOLE

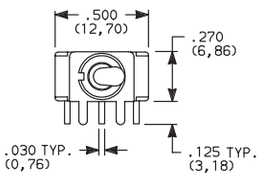

Actuator Shown
In Pos. 1

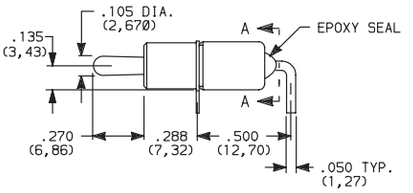

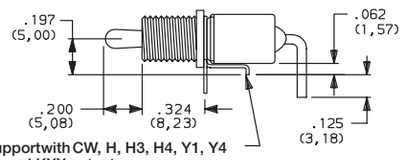

Switch support with CW, H, H3, H4, Y1, Y4 bushings and KXX actuators.

Part No. Shown: 7101MHABE

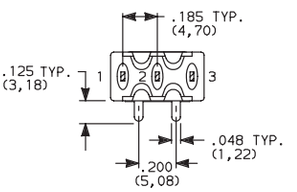

SECTION A-A

Terminal Nos.
For Reference Only

7101MD9ABE
Horizontal Actuation
SPDT

A3 RIGHT ANGLE, SNAP-IN, PC THRU-HOLE

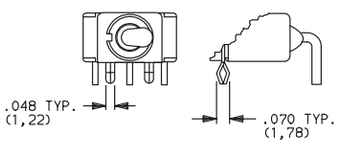

Not available with I seal option.
Terminal bend radii and lead-in manufacturing option.

AW1, AW4 RIGHT ANGLE, EXTENDED, PC THRU-HOLE

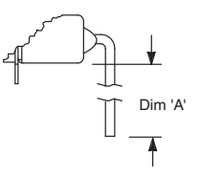

OPTION CODE	DIM 'A'
AW1	.72 (18,3)
AW4	.83 (21,1)

PC MOUNTING

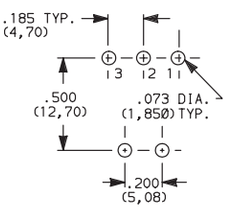

Third Angle Projection

Dimensions are shown: Inches (mm)
Specifications and dimensions subject to change

TERMINATIONS

A RIGHT ANGLE, PC THRU-HOLE

7201MD9ABE
Horizontal Actuation
DPDT

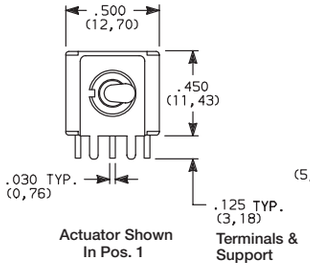

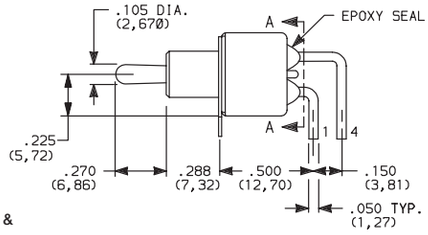

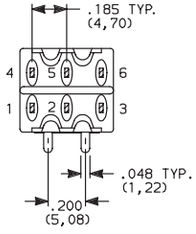

SECTION A-A

A3 RIGHT ANGLE, SNAP-IN, PC THRU-HOLE

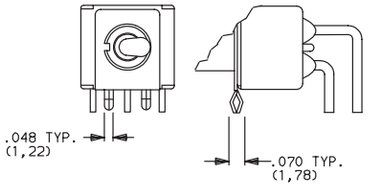

AW1, AW4 RIGHT ANGLE, EXTENDED, PC THRU-HOLE

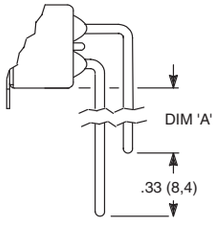

OPTION CODE	DIM 'A'
AW1	.40 (10,2)
AW4	.50 (12,7)

PC MOUNTING

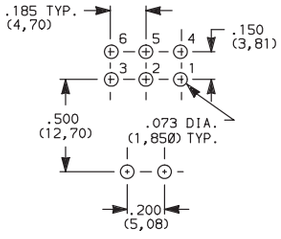

Not available with I seal option.
Terminal bend radii and lead-in manufacturing option.

A RIGHT ANGLE, PC THRU-HOLE

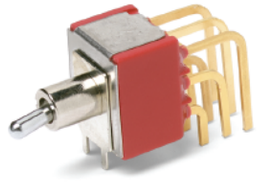

7301MD9ABE
Horizontal Actuation
3PDT

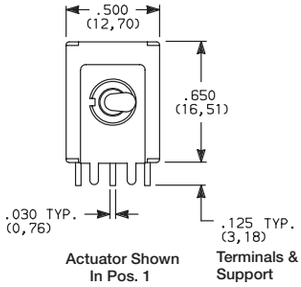

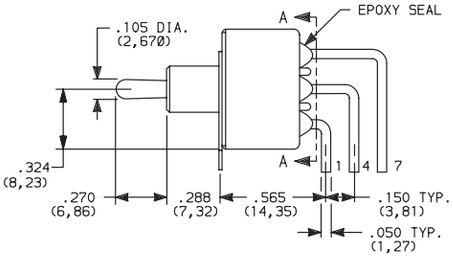

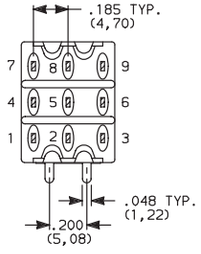

SECTION A-A

AW4 RIGHT ANGLE, EXTENDED, PC THRU-HOLE

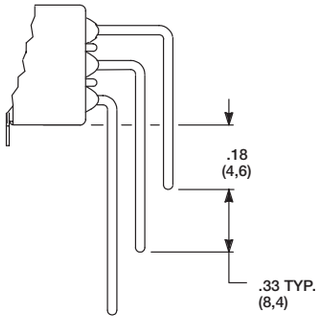

PC MOUNTING

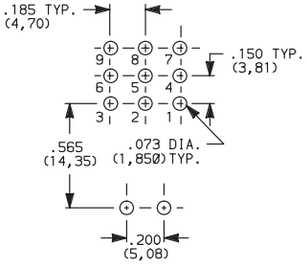

Not available with I seal option.
Terminal bend radii and lead-in manufacturing option.

TERMINATIONS

A2

RIGHT ANGLE, PC THRU-HOLE,
.156" PITCH

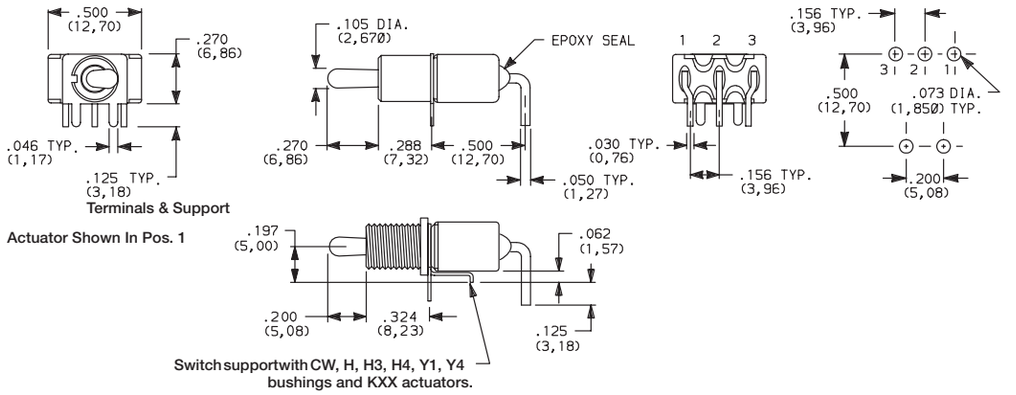

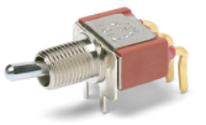

7101MHA2BE
Horizontal Actuation
SPDT

Actuator Shown In Pos. 1

Not available with TXX actuators and I seal.
Terminal bend radii and lead-in manufacturing option.

Part No. Shown: 7101MHA2BE

A4

RIGHT ANGLE, PC THRU-HOLE
.156" PITCH

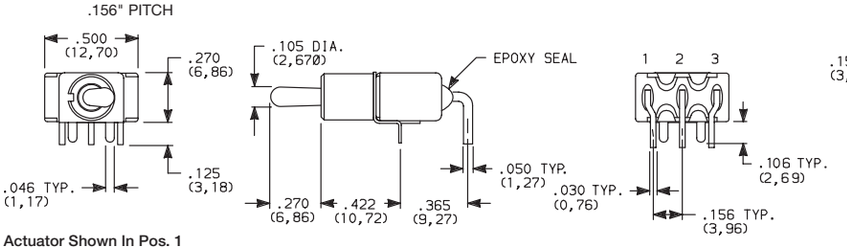

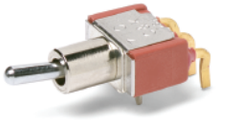

7101MD9A4BE
Horizontal Actuation
SPDT

Actuator Shown In Pos. 1

Not available with KXX & TXX actuators, CW, H, H3, H4, Y1 & Y4 bushings, and I seal. Terminal bend radii and lead-in manufacturing option.

NOTE: The A4 option is available with any contact material and can be UL recognized and CSA certified. The PC pattern must clear switch support legs.

AV2

VERTICAL RIGHT ANGLE, PC THRU-HOLE,
.150" PITCH

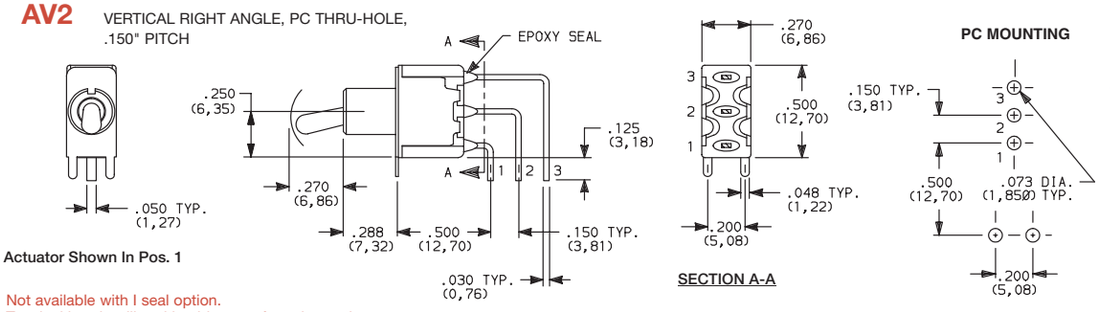

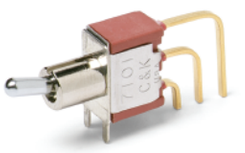

7101MD9AV2BE
Horizontal Actuation
SPDT

Actuator Shown In Pos. 1

Not available with I seal option.
Terminal bend radii and lead-in manufacturing option.

AV2

VERTICAL RIGHT ANGLE, PC THRU-HOLE,
.150" PITCH

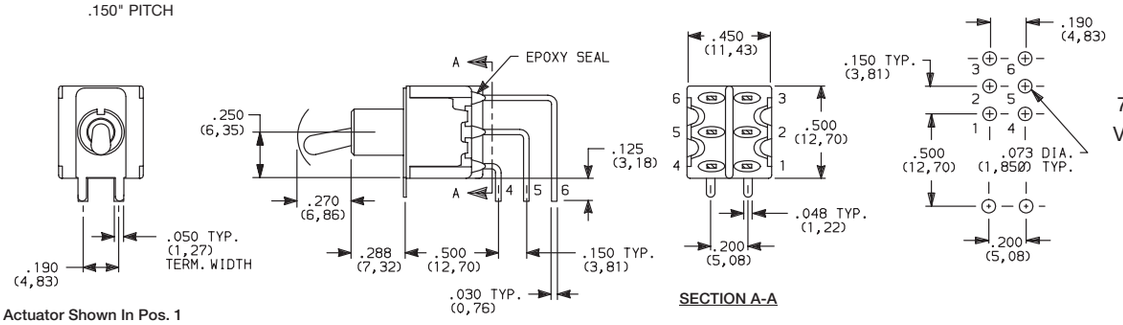

7201MD9AV2BE
Vertical Actuation
DPDT

Actuator Shown In Pos. 1

Not available with I seal option.
Terminal bend radii and lead-in manufacturing option.

Third Angle Projection

Dimensions are shown: Inches (mm)
Specifications and dimensions subject to change

7000 Series
Miniature Toggle Switches

TERMINATIONS

AV2 VERTICAL RIGHT ANGLE, PC THRU-HOLE, .150" PITCH

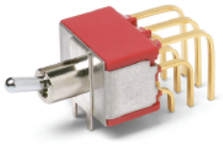

7301MD9AV2BE
Vertical Actuation
3PDT

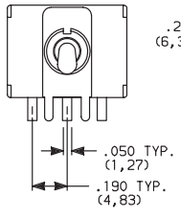

Actuator Shown In Pos. 1

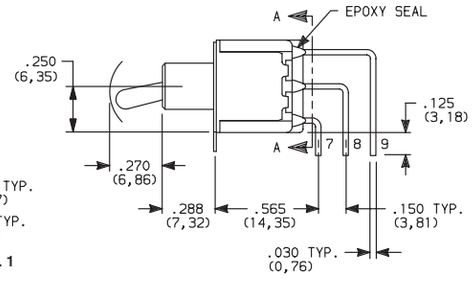

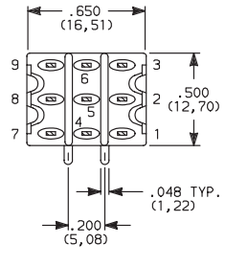

SECTION A-A

PC MOUNTING

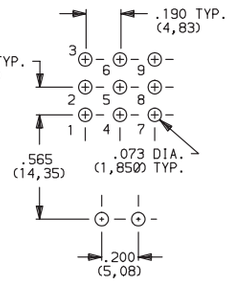

Not available with I seal option.
Terminal bend radii and lead-in manufacturing option.

AV2 VERTICAL RIGHT ANGLE, PC THRU-HOLE, .150" PITCH

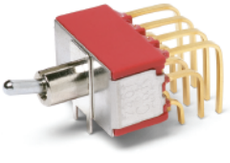

7401MD9AV2BE
Vertical Actuation
4PDT

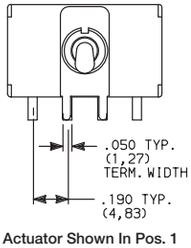

Actuator Shown In Pos. 1

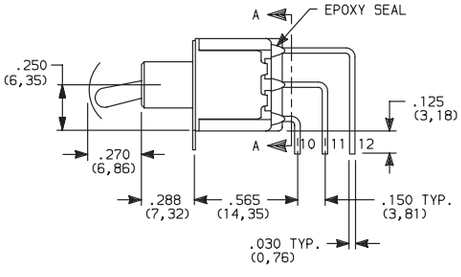

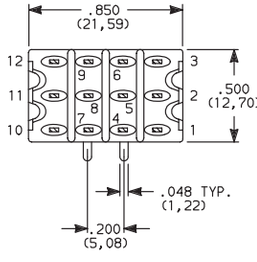

SECTION A-A

PC MOUNTING

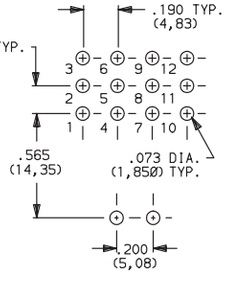

Not available with I seal option.
Terminal bend radii and lead-in manufacturing option.

V2, V6, V7, V8 VERTICAL MOUNT, V-BRACKET
V21, V71, V81 VERTICAL MOUNT, V-BRACKET, SNAP-IN

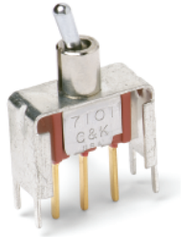

7101MD9__BE
SPDT

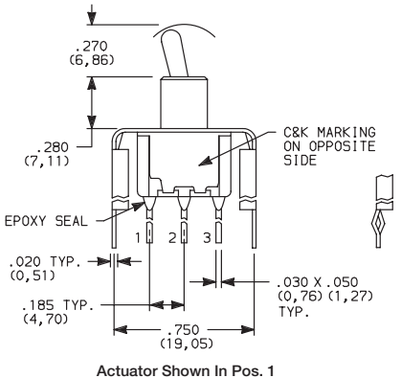

Actuator Shown In Pos. 1

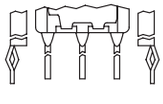

Snap-In

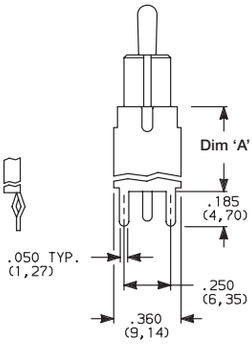

PC MOUNTING

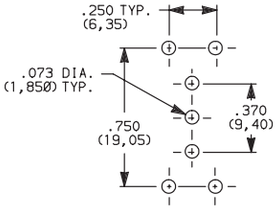

OPTION CODE	DIM 'A'
V2, V21	.555 (14,10)
V6	.460 (11,68)
V7, V71	.630 (16,00)
V8, V81	.953 (24,21)

Not available with I seal option.

F
Toggle

Third Angle Projection

Dimensions are shown: Inches (mm)
Specifications and dimensions subject to change

TERMINATIONS

V2, V6, V7, V8 VERTICAL MOUNT, V-BRACKET
V21, V61, V71, V81 VERTICAL MOUNT, V-BRACKET, SNAP-IN

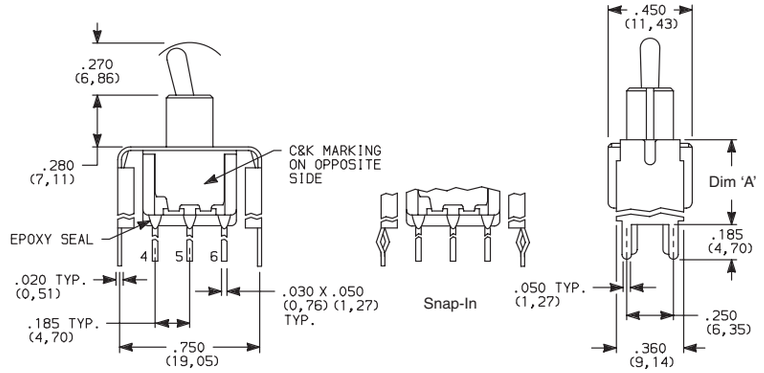

Actuator Shown In Pos. 1

Not available with I seal option.

PC MOUNTING

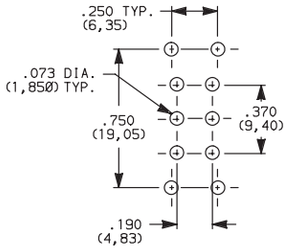

OPTION CODE	DIM 'A'
V2, V21	.555 (14,10)
V6, V61	.460 (11,68)
V7, V71	.630 (16,00)
V8, V81	.953 (24,21)

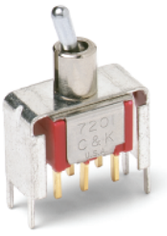

7201MD9__BE
DPDT

V2, V7, V8 VERTICAL MOUNT, V-BRACKET
V21, V71, V81 VERTICAL MOUNT, V-BRACKET, SNAP-IN

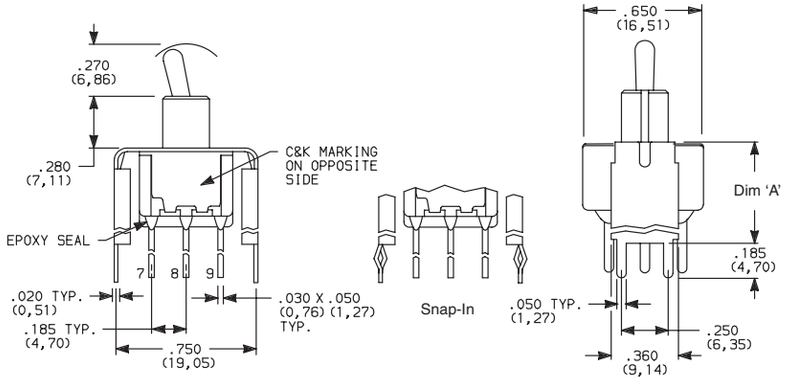

Actuator Shown In Pos. 1

Not available with I seal option.

PC MOUNTING

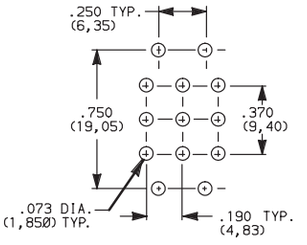

OPTION CODE	DIM 'A'
V2, V21	.555 (14,10)
V7, V71	.630 (16,00)
V8, V81	.953 (24,21)

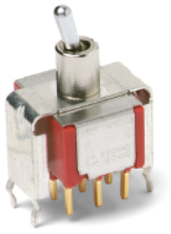

7301MD9__BE
3PDT

V2, V7, V8 VERTICAL MOUNT, V-BRACKET
V21, V71, V81 VERTICAL MOUNT, V-BRACKET, SNAP-IN

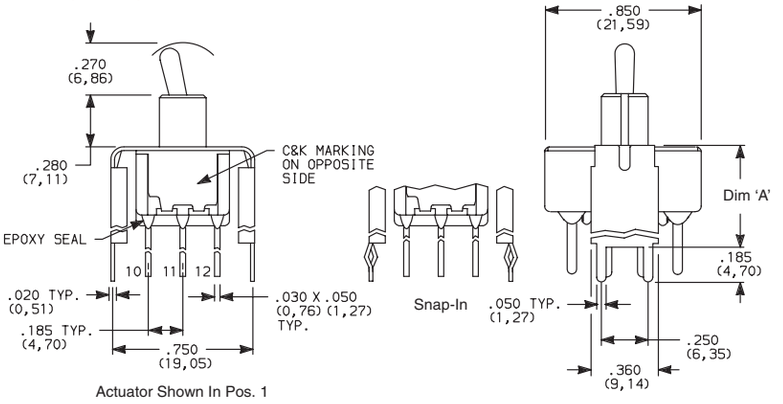

Actuator Shown In Pos. 1

Not available with I seal option.

PC MOUNTING

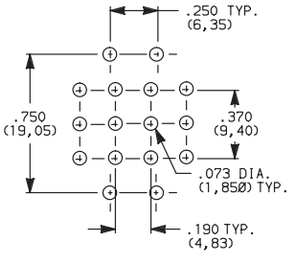

OPTION CODE	DIM 'A'
V2, V21	.555 (14,10)
V7, V71	.630 (16,00)
V8, V81	.953 (24,21)

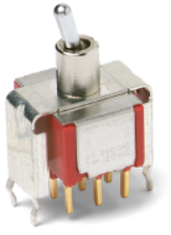

7401MD9__BE
4PDT

Third Angle Projection

Dimensions are shown: Inches (mm)
Specifications and dimensions subject to change

TERMINATIONS

V3, V4, V9 VERTICAL MOUNT, V-BRACKET

V31, V41 VERTICAL MOUNT, V-BRACKET, SNAP-IN

7101MD9__BE
SPDT

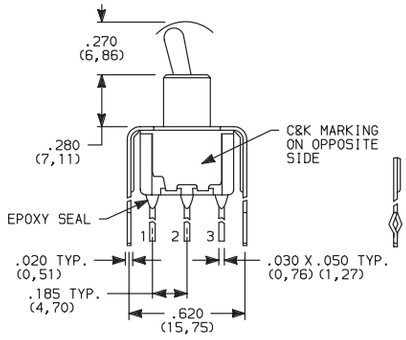

Actuator Shown In Pos. 1

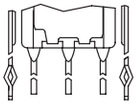

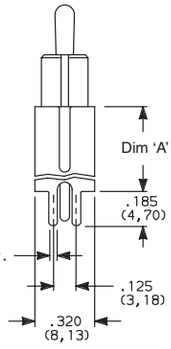

PC MOUNTING

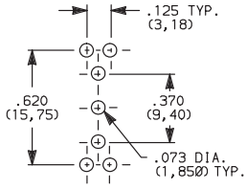

OPTION CODE	DIM 'A'
V3, V31	.460 (11,68)
V4, V41	.630 (16,00)
V9	1.150 (29,21)

Not available with I seal option.

V3, V4, V9 VERTICAL MOUNT, V-BRACKET

V31, V41 VERTICAL MOUNT, V-BRACKET, SNAP-IN

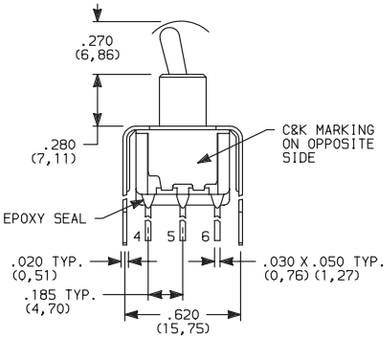

Actuator Shown In Pos. 1

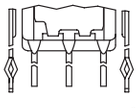

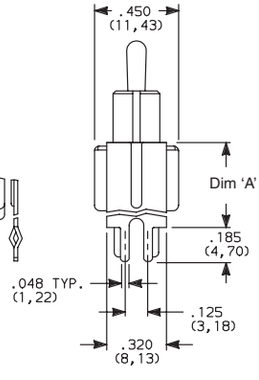

PC MOUNTING

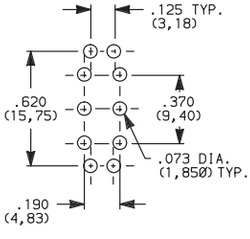

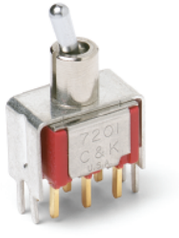

7201MD9__BE
DPDT

OPTION CODE	DIM 'A'
V3, V31	.460 (11,68)
V4, V41	.630 (16,00)
V9	1.150 (29,21)

Not available with I seal option.

V4, V9 VERTICAL MOUNT, V-BRACKET

V41 VERTICAL MOUNT, V-BRACKET, SNAP-IN

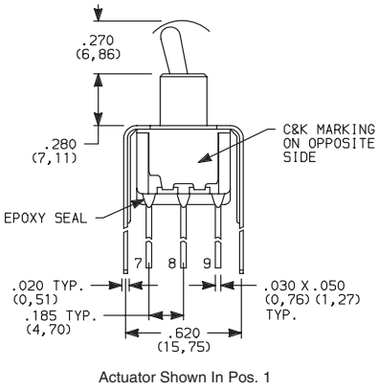

Actuator Shown In Pos. 1

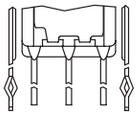

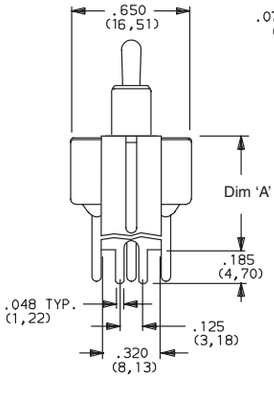

PC MOUNTING

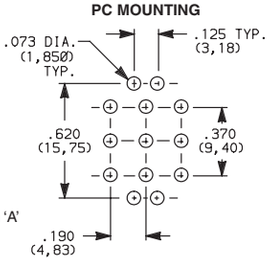

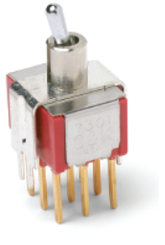

7301MD9__BE
3PDT

OPTION CODE	DIM 'A'
V4, V41	.630 (16,00)
V9	1.150 (29,21)

Not available with I seal option.

Third Angle Projection

Dimensions are shown: Inches (mm)
Specifications and dimensions subject to change

TERMINATIONS

V4, V9 VERTICAL MOUNT, V-BRACKET

V41 VERTICAL MOUNT, V-BRACKET, SNAP-IN

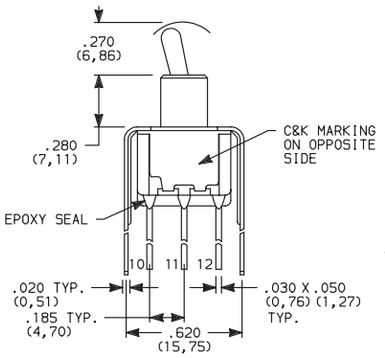

Actuator Shown In Pos. 1

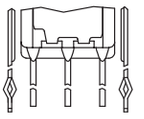

Snap-In

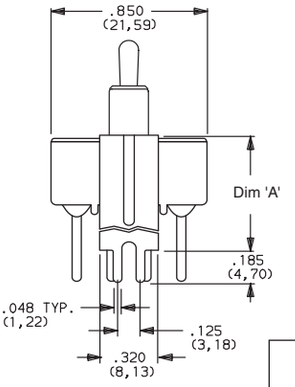

PC MOUNTING

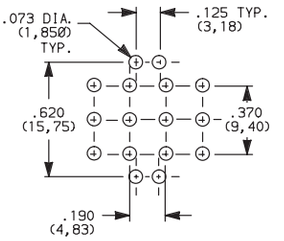

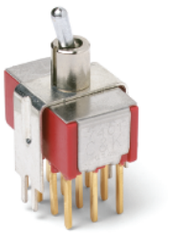

7401MD9__BE
4PDT

Not available with I seal option.

OPTION CODE	DIM 'A'
V4, V41	.630 (16,00)
V9	1.150 (29,21)

CONTACT MATERIAL

OPTION CODE	CONTACT MATERIAL	TERMINAL PLATING	RATINGS	
B	GOLD [1]	GOLD [1]	LOW LEVEL/ DRY CIRCUIT	0.4 VA MAX. @ 20 V AC OR DC MAX.
P		MATTE-TIN [6]		
Q	SILVER [4,5]	SILVER [5]	POWER	5 AMPS @ 120 V AC OR 28 V DC; 2 AMPS @ 250 V AC.
S		MATTE-TIN [6]		
G	GOLD OVER SILVER [2,3]	GOLD [3]	LOW LEVEL/DRY CIRCUIT OR POWER	0.4 VA MAX @ 20 V AC OR DC MAX. OR 5 AMPS @ 120 V AC OR 28 V DC; 2 AMPS @ 250 V AC.
R		MATTE-TIN [6]		

* Note: See Technical Data section of this catalog for RoHS compliant and compatible definitions and specifications.

[1] CONTACTS & TERMINALS: Copper alloy, with gold plate over nickel plate.
[2] END CONTACTS: Coin silver, with gold plate over nickel plate.
[3] CENTER CONTACTS & ALL TERMINALS: Copper alloy, with gold plate over nickel plate.
[4] END CONTACTS: Coin silver, silver plated.
[5] CENTER CONTACT & ALL TERMINALS: Copper alloy, silver plated.
[6] TERMINALS: Copper alloy, with matte tin alloy nickel plate.

NOTE: Any models supplied with P, S, R, Q, B or G contact material are RoHS compliant.

U11-U415 model numbers c UL us with all options when ordered with G, S, R, or Q contact material.

B contact material standard with all terminations except C, Z & Z3.

Q contact material standard with C, Z & Z3 terminations.

P, S & R contact materials not available with Z & Z3 terminations.

Third Angle Projection

Dimensions are shown: Inches (mm)
Specifications and dimensions subject to change

7000 Series
Miniature Toggle Switches

SEAL

E EPOXY SEAL

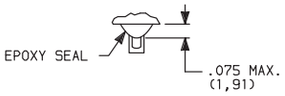

Compatible with "bottom-wash" PC board cleaning methods.

I EPOXY POTTED BASE

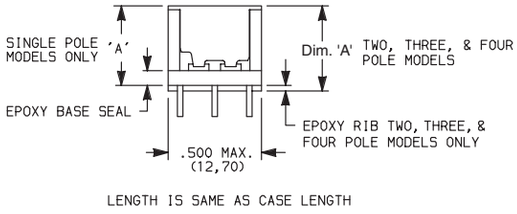

NO. POLES	DIM 'A'
SP	.410 (10,41)
DP	.440 (11,18)
3P	.505 (12,83)
4P	.505 (12,83)

Available with C, W-W5, Z & Z3 terminations only.

AVAILABLE HARDWARE

Cap

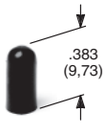

PART NO.

896801000 WHITE
896802000 BLACK
896803000 RED

Material: Polyethylene
Finish: Matte

Cap

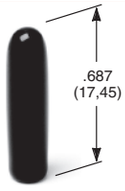

PART NO.

763701000 WHITE
763702000 BLACK
763703000 RED

Material: Vinyl
Finish: Matte

Cap

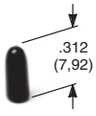

PART NO.

706201000 WHITE
706202000 BLACK
706203000 RED

Material: Vinyl
Finish: Matte

L41 Lever handle

PART NO.

481001000 WHITE
481002263 BLACK
481003000 RED

Material: Nylon
Finish: Matte

L42 Lever handle

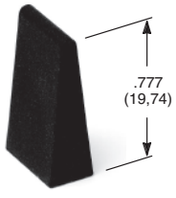

PART NO.

481101000 WHITE
481102263 BLACK
481103000 RED

Material: Nylon
Finish: Matte

Fits Z3 Termination female connector

PART NO.

530100000

Available in loose pieces.

NOTE: Additional nuts, locking rings and lockwashers available separately, see Section N.

Other colors available, consult Customer Service Center.

759D02000 Sealing Boot

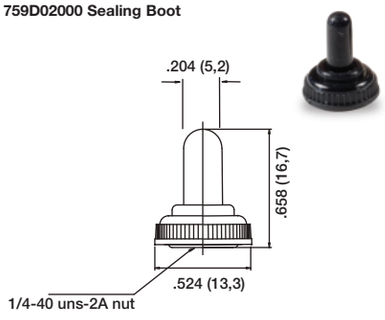

NOTE: For use with S actuator style when combined with D, H, H3, Y, and Y4 bushings

703D02000 Sealing Boot

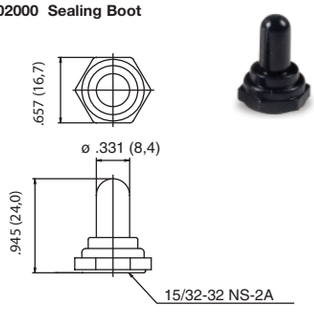

NOTE: For use with T and TP style actuators. **Cannot be used for Switch Functions: 7103, 7203, 7303, 7403, 7107, 7207, 7307, 7407.**

704D02000 Sealing Boot

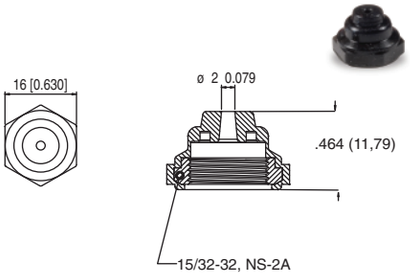

NOTE: For use with T, TP and T2P style actuators. **Cannot be used for Switch Functions: 7103, 7203, 7303, 7403, 7107, 7207, 7307, and 7407.**

Third Angle Projection

Dimensions are shown: Inches (mm)
Specifications and dimensions subject to change

Features/Benefits

- ***Qualified to MIL-S-83731***
- ***50 µ inch selective gold contact plating***
- ***Epoxy sealed terminals for process compatibility***
- ***Rated for logic level to 5 amp resistive loads and 2 amp inductive loads***
- ***Flame retardant housing material***
- ***RoHS compliant and compatible***

Test Requirement	MIL-S-83731/9, 10, 13, 14, 15, 16
1. Strength of Terminal	1 lb. – solder lug
2. Strength of Actuating Lever Pivot and Stop	10 lbs. & 8 lbs. throughout range
3. Strength of Mounting Means	15 lbs. in. torque on bushing
4. Dielectric (Sea Level) Indication	1000 VAC Group B, 750 VAC after electrical endurance. 500µA max. leakage
5. Contact Voltage Drop	2.5 millivolt initial, 5.0 millivolt after mechanical endurance @ 2-6 VDC 0.1 amp
6. Temperature Rise	50° C rise max. @ rated resistive load after endurance test
7. Short Circuit	10 operations carry 100 amps resistive load @ lowest DC volts
8. Mechanical Life	20K operations at specified high and low temperatures
9. Electrical Endurance	10K operations at specified high and low temperatures
10. Overload	50 operations @ 150% of rated resistive load
11. Electrical Endurance at Sea Level	10K operations resistive load @ room temperature 10K operations inductive load @ room temperature 10K operations lamp load @ room temperature Performed on different test samples
12. Vibration	Method 204 of MIL-STD-202, test condition A .06 D. A. or 10 G's 10-500 Hz, 10 usec. max. chatter
13. Shock	Fuse-method 213 or MIL-STD-202, 10 usec. max. chatter
14. Salt Spray Test Upon Completion	48 hours – method 101 of MIL-STD-202, test condition B 10 operations resistive load (toggle sealed switches only)
15. Moisture Resistance Test Upon Completion	Method 106 of MIL-STD-202 100 VDC potential between current carrying parts and panel
16. Sand & Dust	Method 110 of MIL-STD-202, test condition B 6 hours @ 23°C 2.5K operations mechanical life (toggle sealed switches only)
17. Explosion	MIL-STD-202 method 109, maximum rated DC inductive load (toggle sealed switches only)
18. Sealing	Toggle seal – 5 operations under 0.5 inches of H_2O above top of bushing
19. A.) Toggle Seal B.) Bushing Seal	(Toggle sealed switches only) (Panel sealed switches only)
20. Temperature Operation	Mechanical life, –25°C to +71°C
21. Life Low Cur. Level	No requirement
22. Fungus	No requirement
23. Intermediate Current	20K operations, 35/40 milliamps @ 5 VDC resistive load @ +71°C
24. Thermal Shock	Method 107 of MIL-STD-202 test condition A; 5 cycles @ –55°C/+85°C

RATINGS

CURRENT RATINGS – HIGH LEVEL

Current Capacity in Amperes – Per Pole		
28V dc	115V ac, 400 Hz	125V ac, 60 Hz
Lamp Load		
1	1	1
Resistive Load		
5	5	5
Inductive Load		
2	2	2

CURRENT RATINGS – LOGIC LEVEL

0.5 Volt – Amp (VA) Max. @ 28 V Max. (AC or DC)

MATERIALS

CASE: Diallyl phthalate (DAP) (UL 94 V-0).
BUSHING: Brass, nickel plated.
HOUSING: Stainless steel.
ACTUATOR: Brass, chrome plated.
SWITCH SUPPORT: Brass, tin plated.
TERMINALS: Gold over nickel over copper alloy.
TERMINAL SEAL: Epoxy.
CONTACTS: Gold over nickel over silver over brass.
PANEL SEAL: Silicone rubber.
MOUNTING HARDWARE: Two hexagon nut, brass with nickel plating; one lockwasher, steel with nickel plating; one locking ring, brass with nickel plating.

HOW TO ORDER: Complete part numbers for MIL-S-83731 TOGGLE SWITCHES are shown on pages F–18 through F–21.

Military/Aerospace/HI-REL
MIL-S-83731 Toggle Switches

NO. POLES	MODEL NO.	SWITCH FUNCTION POS. 1	SWITCH FUNCTION POS. 2	SWITCH FUNCTION POS. 3	CONNECTED TERMINALS POS. 1	CONNECTED TERMINALS POS. 2	CONNECTED TERMINALS POS. 3	SCHEMATIC
SP	M83731/9-211	ON	OFF	ON	2-3	OPEN	2-1	SPDT
	M83731/9-231	ON	NONE	ON				
	M83731/9-261	ON	NONE	MOM.				
	M83731/9-271	MOM.	OFF	MOM.				
	M83731/9-311	ON	OFF	MOM.				
	M83731/9-341	NONE	ON	MOM.	N/A	2-3	2-1	

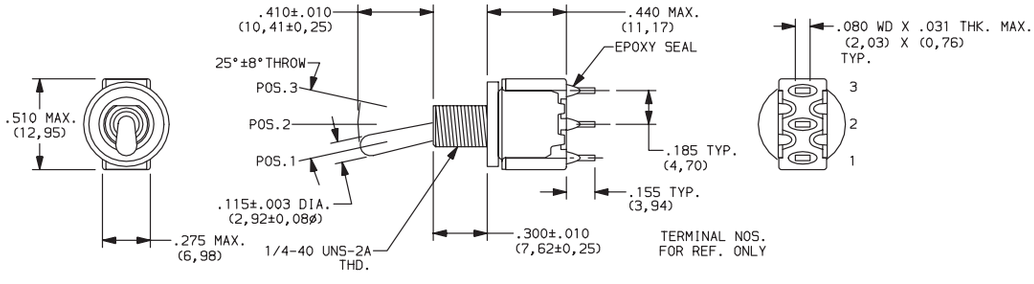

SPDT

NO. POLES	MODEL NO.	SWITCH FUNCTION POS. 1	SWITCH FUNCTION POS. 2	SWITCH FUNCTION POS. 3	CONNECTED TERMINALS POS. 1	CONNECTED TERMINALS POS. 2	CONNECTED TERMINALS POS. 3	SCHEMATIC
DP	M83731/10-211	ON	OFF	ON	2-3,5-6	OPEN	2-1,5-4	DPDT
	M83731/10-231	ON	NONE	ON				
	M83731/10-261	ON	NONE	MOM.				
	M83731/10-271	MOM.	OFF	MOM.				
	M83731/10-311	ON	OFF	MOM.				
	M83731/10-321	ON	ON	ON	2-3,5-6	2-3,5-4	2-1,5-4	
	M83731/10-331	ON	ON	MOM.				
	M83731/10-341	NONE	ON	MOM.	N/A	2-3,5-6	2-1,5-4	
	M83731/10-351	MOM.	ON	MOM.	2-3,5-6	2-3,5-4	2-1,5-4	

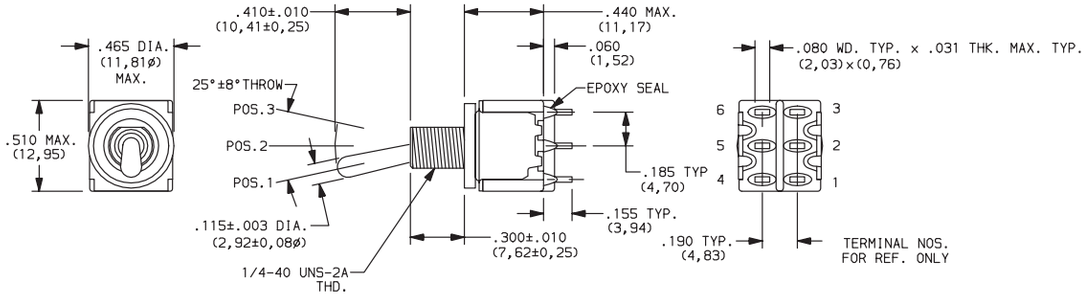

DPDT

PANEL MOUNTING

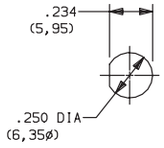

Without locking ring.

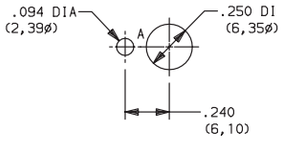

With standard locking ring.

Third Angle Projection

Dimensions are shown: Inches (mm)
Specifications and dimensions subject to change

NO. POLES	MODEL NO.	SWITCH FUNCTION POS. 1	SWITCH FUNCTION POS. 2	SWITCH FUNCTION POS. 3	CONNECTED TERMINALS POS. 1	CONNECTED TERMINALS POS. 2	CONNECTED TERMINALS POS. 3	SCHEMATIC
SP	M83731/9-212	ON	OFF	ON	2-3	OPEN	2-1	SPDT
	M83731/9-232	ON	NONE	ON				
	M83731/9-262	ON	NONE	MOM.				
	M83731/9-272	MOM.	OFF	MOM.				
	M83731/9-312	ON	OFF	MOM.				
	M83731/9-342	NONE	ON	MOM.	N/A	2-3	2-1	

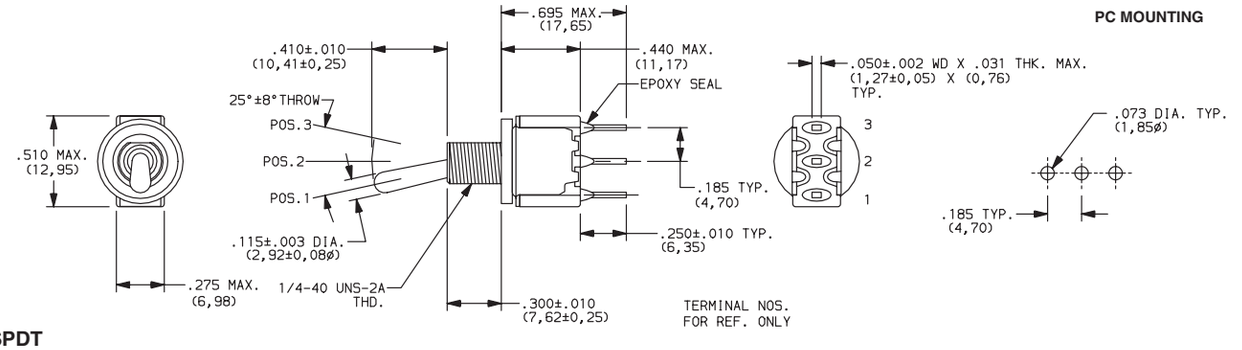

SPDT

NO. POLES	MODEL NO.	SWITCH FUNCTION POS. 1	SWITCH FUNCTION POS. 2	SWITCH FUNCTION POS. 3	CONNECTED TERMINALS POS. 1	CONNECTED TERMINALS POS. 2	CONNECTED TERMINALS POS. 3	SCHEMATIC
DP	M83731/10-212	ON	OFF	ON	2-3,5-6	OPEN	2-1,5-4	DPDT
	M83731/10-232	ON	NONE	ON				
	M83731/10-262	ON	NONE	MOM.				
	M83731/10-272	MOM.	OFF	MOM.				
	M83731/10-312	ON	OFF	MOM.				
	M83731/10-322	ON	ON	ON	2-3,5-6	2-3,5-4	2-1,5-4	
	M83731/10-332	ON	ON	MOM.				
	M83731/10-342	NONE	ON	MOM.	N/A	2-3,5-6	2-1,5-4	
	M83731/10-352	MOM.	ON	MOM.	2-3,5-6	2-3,5-4	2-1,5-4	

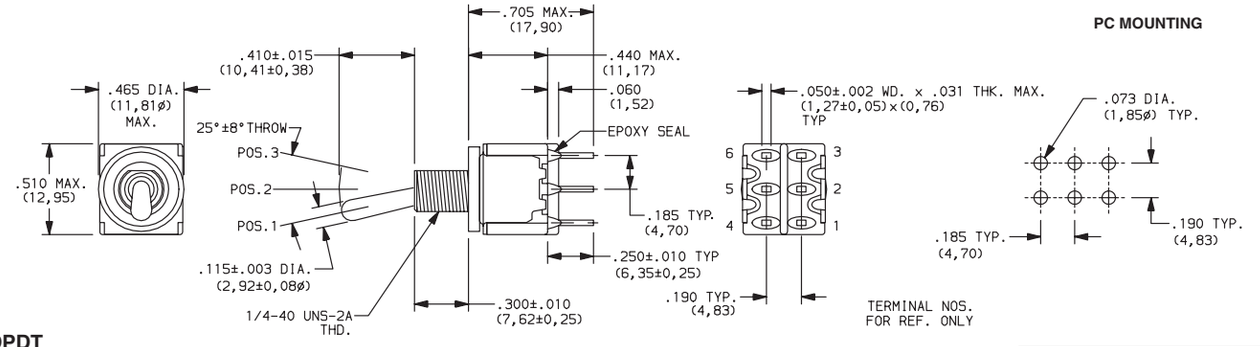

DPDT

Third Angle Projection

Dimensions are shown: Inches (mm)
Specifications and dimensions subject to change

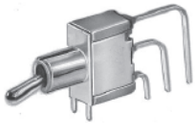

NO. POLES	MODEL NO.	SWITCH FUNCTION POS. 1	SWITCH FUNCTION POS. 2	SWITCH FUNCTION POS. 3	CONNECTED TERMINALS POS. 1	CONNECTED TERMINALS POS. 2	CONNECTED TERMINALS POS. 3	SCHEMATIC
SP	M83731/13-211	ON	OFF	ON	2-3	OPEN	2-1	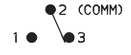 SPDT
	M83731/13-231	ON	NONE	ON				
	M83731/13-261	ON	NONE	MOM.				
	M83731/13-271	MOM.	OFF	MOM.				
	M83731/13-311	ON	OFF	MOM.				
	M83731/13-341	NONE	ON	MOM.	N/A	2-3	2-1	

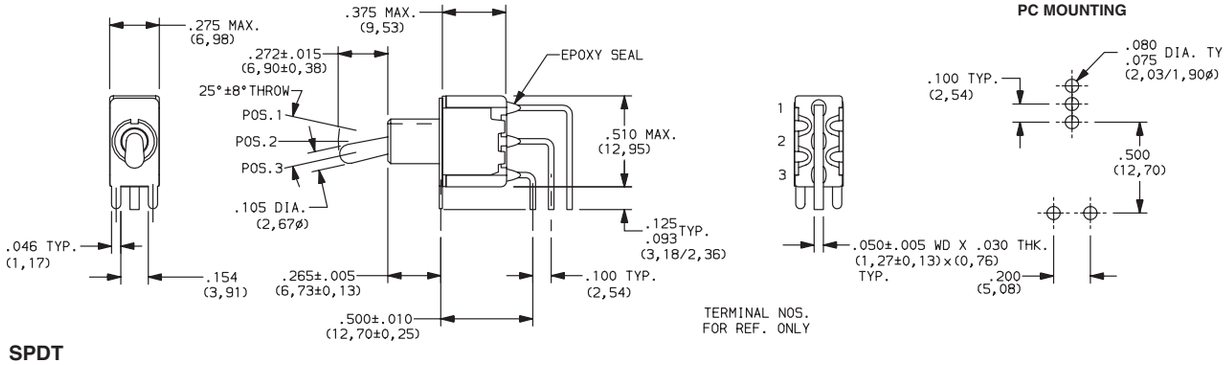

SPDT

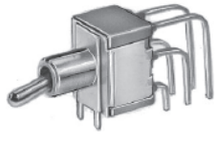

NO. POLES	MODEL NO.	SWITCH FUNCTION POS. 1	SWITCH FUNCTION POS. 2	SWITCH FUNCTION POS. 3	CONNECTED TERMINALS POS. 1	CONNECTED TERMINALS POS. 2	CONNECTED TERMINALS POS. 3	SCHEMATIC
DP	M83731/14-211	ON	OFF	ON	2-3,5-6	OPEN	2-1,5-4	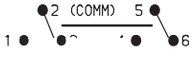 DPDT
	M83731/14-231	ON	NONE	ON				
	M83731/14-261	ON	NONE	MOM.				
	M83731/14-271	MOM.	OFF	MOM.				
	M83731/14-311	ON	OFF	MOM.				
	M83731/14-321	ON	ON	ON	2-3,5-6	2-3,5-4	2-1,5-4	
	M83731/14-331	ON	ON	MOM.				
	M83731/14-341	NONE	ON	MOM.	N/A	2-3,5-6	2-1,5-4	
	M83731/14-351	MOM.	ON	MOM.	2-3,5-6	2-3,5-4	2-1,5-4	

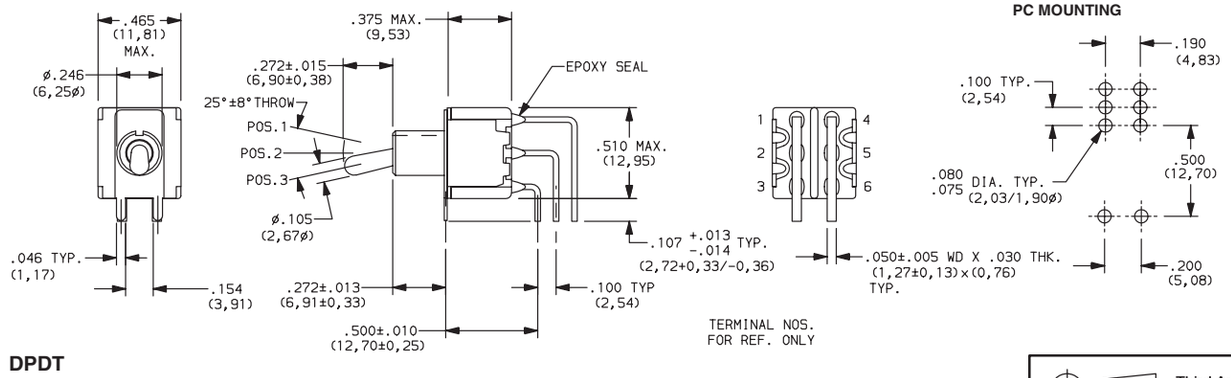

DPDT

Third Angle Projection

Dimensions are shown: Inches (mm)
Specifications and dimensions subject to change

NO. POLES	MODEL NO.	SWITCH FUNCTION POS. 1	SWITCH FUNCTION POS. 2	SWITCH FUNCTION POS. 3	CONNECTED TERMINALS POS. 1	CONNECTED TERMINALS POS. 2	CONNECTED TERMINALS POS. 3	SCHEMATIC
SP	M83731/15-211	ON	OFF	ON	2-3	OPEN	2-1	SPDT
	M83731/15-231	ON	NONE	ON				
	M83731/15-261	ON	NONE	MOM.				
	M83731/15-271	MOM.	OFF	MOM.				
	M83731/15-311	ON	OFF	MOM.				
	M83731/15-341	NONE	ON	MOM.	N/A	2-3	2-1	

PC MOUNTING

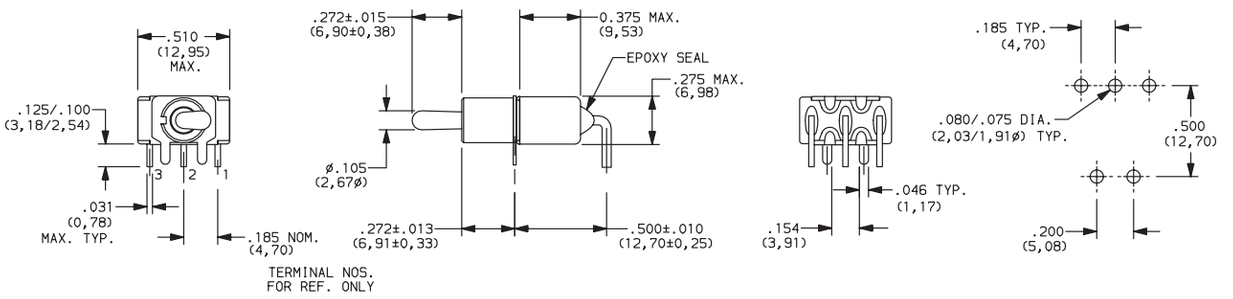

SPDT

NO. POLES	MODEL NO.	SWITCH FUNCTION POS. 1	SWITCH FUNCTION POS. 2	SWITCH FUNCTION POS. 3	CONNECTED TERMINALS POS. 1	CONNECTED TERMINALS POS. 2	CONNECTED TERMINALS POS. 3	SCHEMATIC
DP	M83731/16-211	ON	OFF	ON	2-3,5-6	OPEN	2-1,5-4	DPDT
	M83731/16-231	ON	NONE	ON				
	M83731/16-261	ON	NONE	MOM.				
	M83731/16-271	MOM.	OFF	MOM.				
	M83731/16-311	ON	OFF	MOM.				
	M83731/16-321	ON	ON	ON	2-3,5-6	2-3,5-4	2-1,5-4	
	M83731/16-331	ON	ON	MOM.				
	M83731/16-341	NONE	ON	MOM.	N/A	2-3,5-6	2-1,5-4	
	M83731/16-351	MOM.	ON	MOM.	2-3,5-6	2-3,5-4	2-1,5-4	

PC MOUNTING

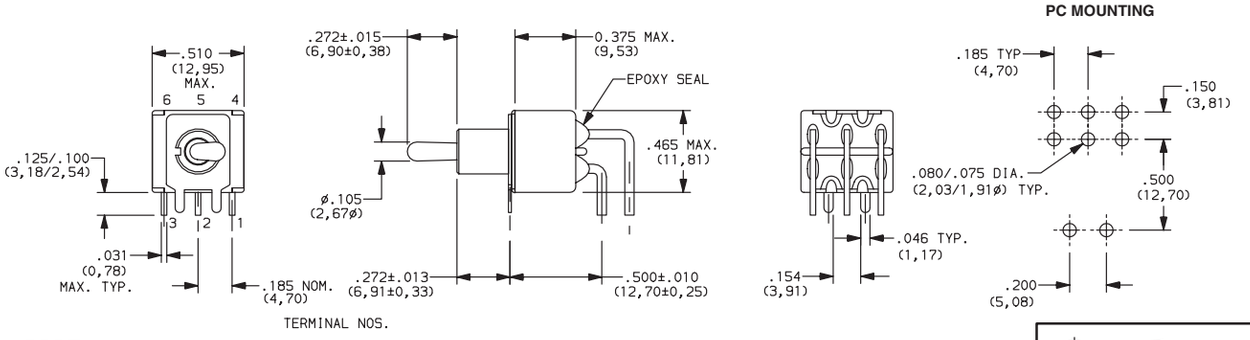

DPDT

Third Angle Projection

Dimensions are shown: Inches (mm)
Specifications and dimensions subject to change

E Series
Sealed Miniature Toggle Switches

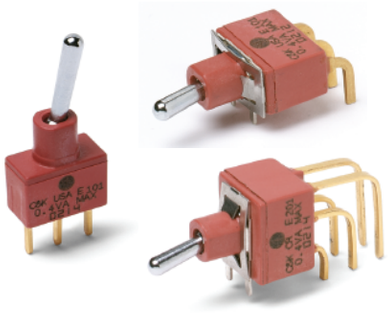

Features/Benefits

- ***Sealed against solder and cleaning process contaminants***
- ***UL 94V-0 Nylon case and bushing***
- ***Multi-positions***
- ***ESD protection available***
- ***RoHS compliant models available***

Typical Applications

- ***Telecommunications***
- ***Instrumentation***
- ***Medical equipment***

Specifications

CONTACT RATING: B contact material: 0.4 VA max. @ 20 V AC or DC max. Q contact material: E1XX & E2XX MODELS: 7.5 AMPS @ 125 V AC or 28 V DC; 3 AMPS @ 250 V AC. E3XX MODELS: 5 AMPS @ 125 V AC or 28 V DC; 2 AMPS @ 250 V AC. See page F-29 for additional ratings.

ELECTRICAL LIFE: E1XX and E2XX models: 40,000 make-and-break cycles at full load. E3XX models: 30,000 cycles.

CONTACT RESISTANCE: Below 10 mΩ typ. initial @ 2-4 V DC, 100 mA, for both silver and gold plated contacts.

INSULATION RESISTANCE: 10^9 Ω min.

ELECTROSTATIC DISCHARGE (ESD) OPTION: F1 conductive bushing only. Dissipates up to 20,000 V DC from actuator to ground.

DIELECTRIC STRENGTH: 1000 Vrms min. @ sea level.

OPERATING TEMPERATURE: –30ºC to 85ºC.

SOLDERABILITY: Per MIL-STD-202F method 208D, or EIA RS-186E method 9 (1 hour steam aging).

DEGREE OF PROTECTION: IP57; Protection against harmful dust deposit, full-scale voltage protection, temporary immersion.

Materials

CASE & BUSHING: Glass filled nylon 6/6, flame retardant, heat stabilized (UL 94V-0). F1 conductive bushing option is impregnated with carbon fibers.

ACTUATOR: Brass, chrome plated with internal o-ring seal standard.

SWITCH SUPPORT: Brass or steel, matte-tin plated.

SWITCH SUPPORT RETAINER: Stainless steel.

CONTACTS & TERMINALS: B contact material: Copper alloy, with gold plate over nickel plate. Q contact material: Copper alloy, silver plated. See page F-29 for additional contact materials.

TERMINAL SEAL: Epoxy.

HARDWARE: Nut & Locking ring: Brass, nickel plated. Lockwasher: Steel, nickel plated.

NOTE: Any models supplied with P, S, R, Q, B or G contact material are RoHS compliant and compatible.

NOTE: Specifications and materials listed above are for switches with standard options. For information on specific and custom switches, consult Customer Service Center.

Build-A-Switch

To order, simply select desired option from each category and place in the appropriate box. Available options are shown and described on pages F–23 thru F–29. For additional options not shown in catalog, consult our Customer Service Center. All models are process sealed to withstand machine soldering temperatures and pressure wash cleaning methods.

Switch Function
- **E101** SP, On-None-On
- **E103** SP, On-Off-On
- **E105** SP, Mom.-Off-Mom.
- **E107** SP, On-Off-Mom.
- **E108** SP, On-None-Mom.
- **E201** DP, On-None-On
- **E203** DP, On-Off-On
- **E205** DP, Mom.-Off-Mom.
- **E207** DP, On-Off-Mom.
- **E208** DP, On-None-Mom.
- **E211** DP, On-On-On
- **E213** DP, On-On-Mom.
- **E215** DP, Mom.-On-Mom.
- ****E301** 3P, On-None-On

Actuator
- **M** .300" high
- **S** .500" high
- **L3** Plastic, .940" high

Bushing
- **D1** .250" high
- ***F1** Conductive, .250" high
- **D9** .280" high
- ****Y** Threaded, .350" high

Terminations
- **A** Right angle, PC thru-hole
- **AV2** Vertical right angle, PC thru-hole
- **C** PC Thru-hole
- **V3** .460" high, V-bracket
- **Z** Solder lug
- **A3** Right angle, PC thru-hole
- **AV3** Vertical right angle, PC thru-hole
- **V6** .460" high, V-bracket
- **V9** 1.150" high, V-bracket
- **V31** .460" high, snap-in V-bracket
- **V61** .460" high, snap-in V-bracket
- **W** .750" long, wire wrap
- **Z3** Quick connect

Contact Material
- **B** Gold
- **P** Gold, matte-tin
- **Q** Silver
- **S** Silver, matte-tin
- **G** Gold over silver
- **R** Gold over silver, matte-tin

Seal
- **E** Epoxy

* F1 available with SP and DP versions only, please see page F-19

** Y threaded bushing available for 1 & 2 pole only

Dimensions are shown: Inches (mm)
Specifications and dimensions subject to change

SWITCH FUNCTION

NO. POLES	MODEL NO.	SWITCH FUNCTION POS. 1	SWITCH FUNCTION POS. 2	SWITCH FUNCTION POS. 3	CONNECTED TERMINALS POS. 1	CONNECTED TERMINALS POS. 2	CONNECTED TERMINALS POS. 3	SCHEMATIC
		C&K marking on opposite side			C&K marking on opposite side			
SP	E101	ON	NONE	ON	2-3	N/A	2-1	SPDT
	E103	ON	OFF	ON	2-3	OPEN	2-1	
	E105	MOM.	OFF	MOM.				
	E107	ON	OFF	MOM.				
	E108	ON	NONE	MOM.	2-3	N/A	2-1	

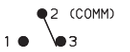

SPDT

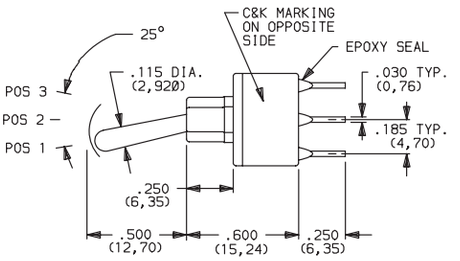

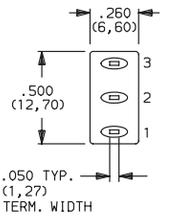

Terminal Numbers
For Reference Only

Part number shown: E101SD1CBE

DP	E201	ON	NONE	ON	2-3,5-6	N/A	2-1,5-4	DPDT
	E203	ON	OFF	ON	2-3,5-6	OPEN	2-1,5-4	
	E205	MOM.	OFF	MOM.				
	E207	ON	OFF	MOM.				
	E208	ON	NONE	MOM.	2-3,5-6	N/A	2-1,5-4	
	E211 **	ON	ON	ON	2-3,5-6	2-3,5-4	2-1,5-4	
	E213**	ON	ON	MOM.				
	E215**	MOM.	ON	MOM.				

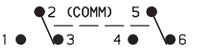

DPDT

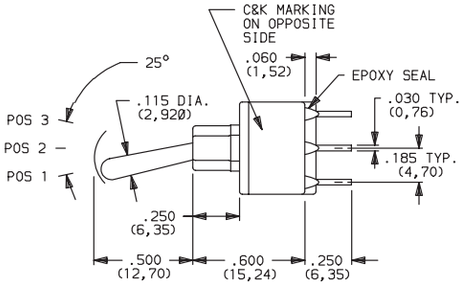

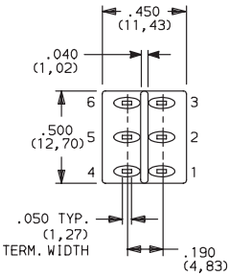

Terminal Numbers
For Reference Only

Part number shown: E201SD1CBE

MOM. = Momentary

** Wiring for 3-way switch, see Section N.

All models cULus with all options when ordered with G,R, Q or S contact material except with F1 conductive bushing.

Third Angle Projection

Dimensions are shown: Inches (mm)
Specifications and dimensions subject to change

E Series
Sealed Miniature Toggle Switches

SWITCH FUNCTION

NO. POLES	MODEL NO.	SWITCH FUNCTION POS. 1	SWITCH FUNCTION POS. 2	SWITCH FUNCTION POS. 3	CONNECTED TERMINALS POS. 1	CONNECTED TERMINALS POS. 2	CONNECTED TERMINALS POS. 3	SCHEMATIC
		C&K marking on opposite side			C&K marking on opposite side			
3P	E301	ON	NONE	ON	2-3,5-6,8-9	N/A	2-1,5-4,8-7	3PDT

3PDT

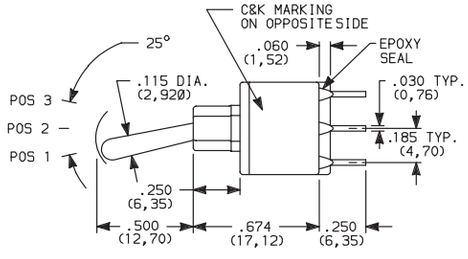

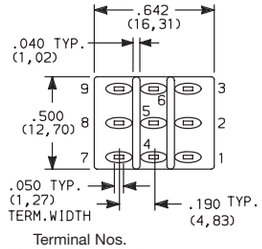

Terminal Nos. For Reference Only

Part number shown: E301SD1CBE

MOM. = Momentary

** Wiring for 3-way switch, see Section N.

All models c UL us with all options when ordered with G, R, Q or S contact material except with F1 conductive bushing.

ACTUATOR

ACTUATOR COLOR

ACTUATOR

M .300" HIGH

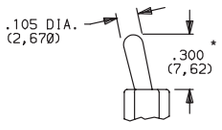

Standard when ordered with A, A3, AV2, AV3, V2-V61 terminations. Finish: Chrome.

S .500" HIGH

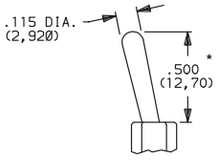

Standard when ordered with C, Z, Z3, W & W4 terminations. Finish: Chrome

L3 PLASTIC, .940" HIGH

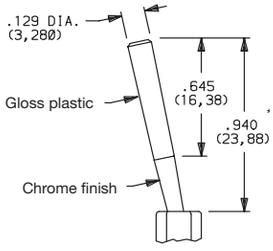

OPTION CODE	L3 ACTUATOR COLOR
2	BLACK

Other colors available, consult Customer Service Center. No color choice required for S & M actuators.

* Actuators shown with standard D1 bushing. Subtract .030 (0,76) for D9 bushing. Subtract .100 (2,54) for Y bushing.

BUSHING

D1 .250" HIGH, UNTHREADED

F1 ESD CONDUCTIVE BUSHING, .250" HIGH, UNTHREADED

F1 bushing is not UL approved

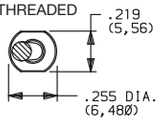

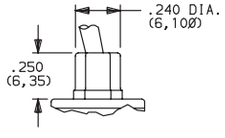

ESD protection depends on proper grounding of switch support bracket. F1 conductive bushing option is impregnated with carbon fibers; dissipates electrostatic discharge (ESD) up to 20,000 V from actuator to ground.

Available with M & S actuator options and A, A3, AV2, AV3, V3-V61 termination options.

D9 .280" HIGH, UNTHREADED

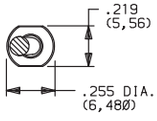

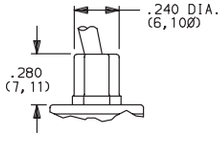

E3XX models not available with D9 bushing.

NOTE: Internal o-ring actuator seal standard for all bushing options.

Y THREADED, INSULATED, .350" HIGH WITH KEYWAY

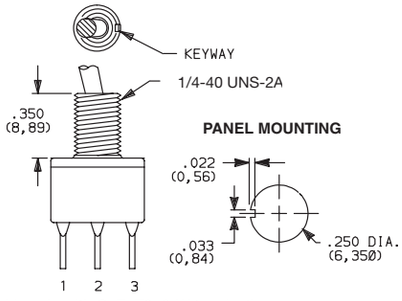

Available only with C, Z, Z3, & W terminations.
Available for 1&2 pole only.
Hardware: One dress nut part number 299D01201, one hex nut part number 540400201 and lockwaser part number 700303202 supplied standard.
Will withstand 4 in.-lbs. of torque with no distortion.

Third Angle Projection

Dimensions are shown: Inches (mm)
Specifications and dimensions subject to change

TERMINATIONS

Z SOLDER LUG

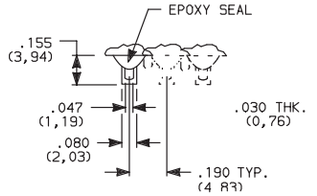

Not available with F1 conductive bushing or P, R or S contact material.

SPDT thru 3PDT

C PC THRU-HOLE

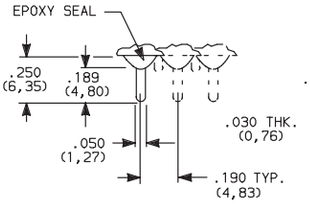

PC MOUNTING

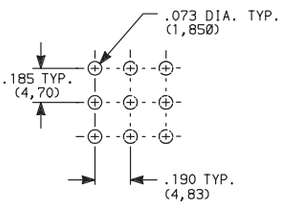

SPDT thru 3PDT

Not available with F1 conductive bushing.

Z3 QUICK CONNECT

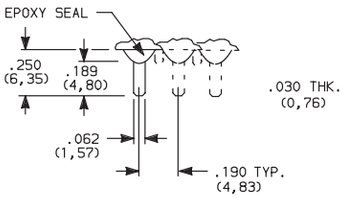

Not available with F1 conductive bushing or P, R or S contact material. Mating quick connector available; order part number 530100000, page F-16.

SPDT thru 3PDT

A RIGHT ANGLE, PC THRU-HOLE

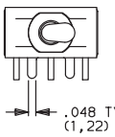

Actuator Shown In Pos. 1

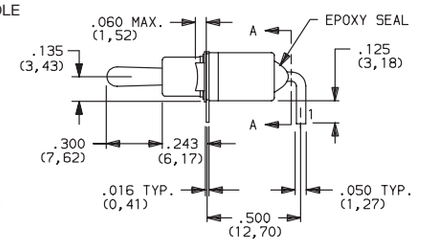

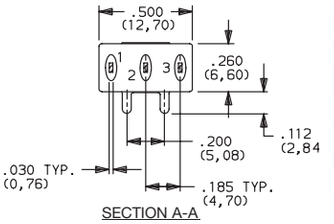

SECTION A-A

Terminal Nos. For Reference Only

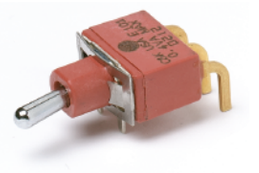

E101MD1ABE
Horizontal Actuation
SPDT

A3 RIGHT ANGLE, SNAP-IN, PC THRU-HOLE

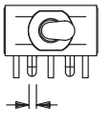

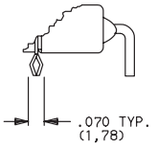

Not available with Y bushing.
Terminal bend radii and lead-in manufacturing option.

PC MOUNTING

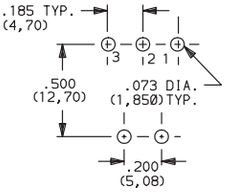

A RIGHT ANGLE, PC THRU-HOLE

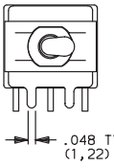

Actuator Shown In Pos. 1

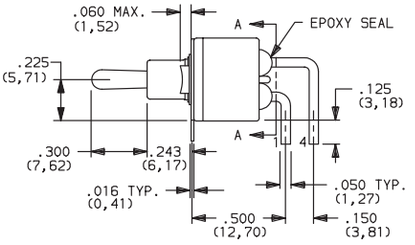

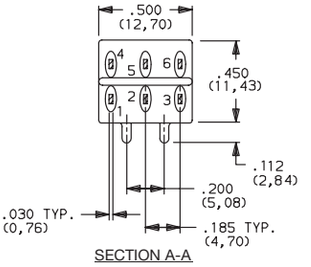

SECTION A-A

Terminal Nos. For Reference Only

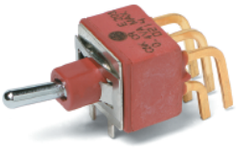

E201MD1ABE
Horizontal Actuation
DPDT

A3 RIGHT ANGLE, SNAP-IN, PC THRU-HOLE

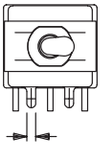

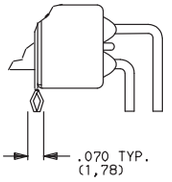

Not available with Y bushing.
Terminal bend radii and lead-in manufacturing option.

PC MOUNTING

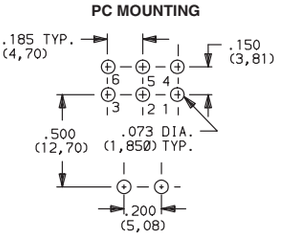

Third Angle Projection

Dimensions are shown: Inches (mm)
Specifications and dimensions subject to change

E Series
Sealed Miniature Toggle Switches

TERMINATIONS

A RIGHT ANGLE, PC THRU-HOLE

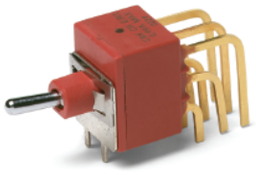

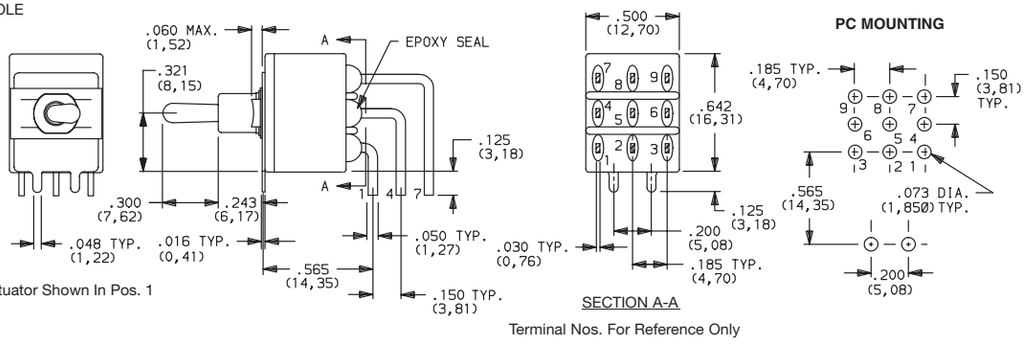

E301MD1ABE
Horizontal Actuation
3PDT

Actuator Shown In Pos. 1

Terminal Nos. For Reference Only

Not available with D9 & Y bushings.
Terminal bend radii and lead-in manufacturing option.

AV2 VERTICAL RIGHT ANGLE, PC THRU-HOLE, .150" PITCH

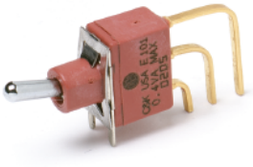

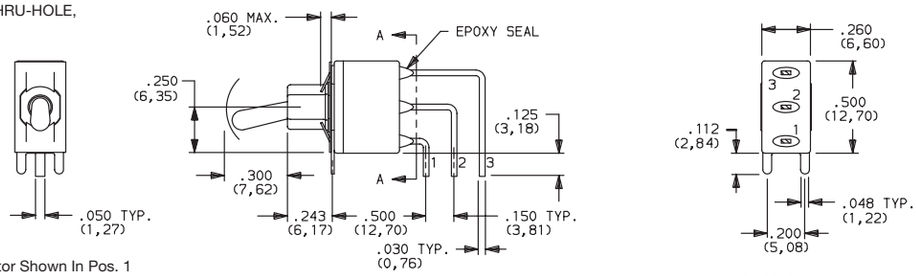

E101MD1AV2BE
Vertical Actuation
SPDT

Actuator Shown In Pos. 1

AV3 VERTICAL RIGHT ANGLE, SNAP-IN, PC THRU-HOLE, .150" PITCH

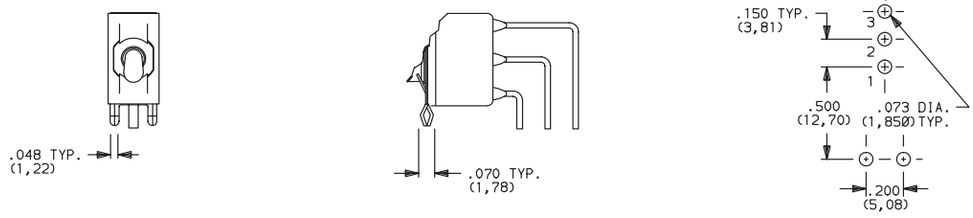

Not available with Y bushing.
Terminal bend radii and lead-in manufacturing option.

AV2 VERTICAL RIGHT ANGLE, PC THRU-HOLE, .150" PITCH

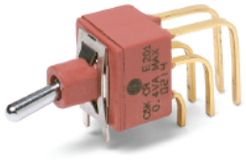

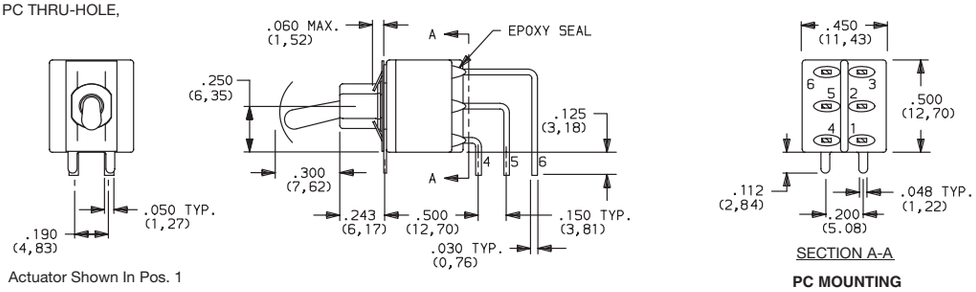

E201MD1AV2BE
Vertical Actuation
DPDT

Actuator Shown In Pos. 1

A3 VERTICAL RIGHT ANGLE, SNAP-IN, PC THRU-HOLE, .150" PITCH

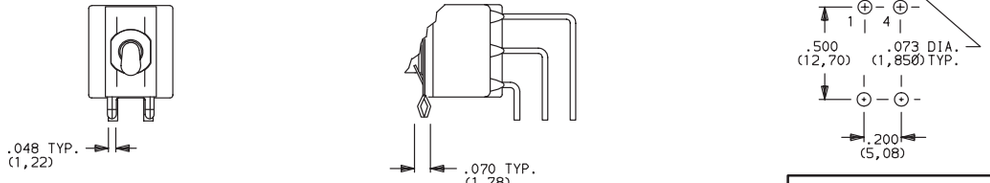

Not available with Y bushing.
Terminal bend radii and lead-in manufacturing option.

Third Angle Projection

Dimensions are shown: Inches (mm)
Specifications and dimensions subject to change

TERMINATIONS

AV2
VERTICAL RIGHT ANGLE, PC THRU-HOLE, .150" PITCH

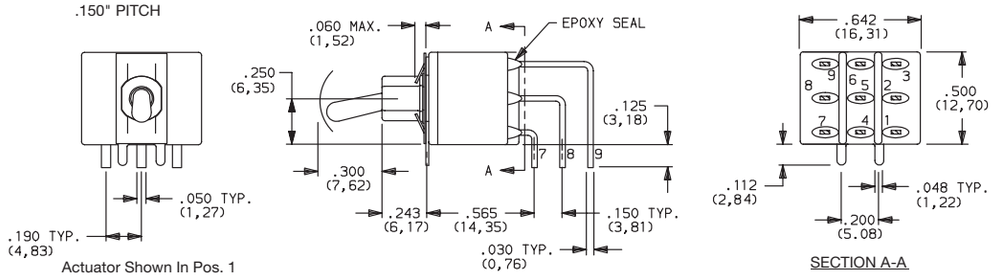

E301MD1AV2BE
Vertical Actuation
3PDT

PC MOUNTING

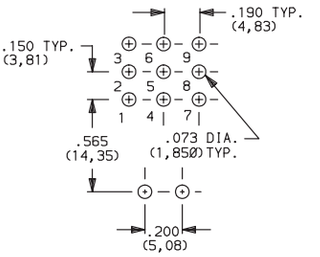

AV3
VERTICAL RIGHT ANGLE, SNAP-IN, PC THRU-HOLE .150" PITCH

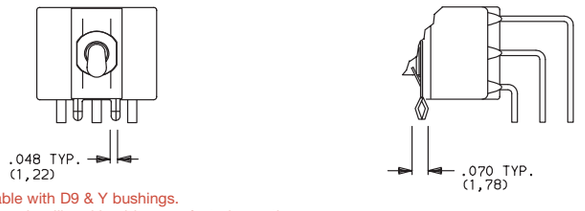

Not available with D9 & Y bushings.
Terminal bend radii and lead-in manufacturing option.

V6
VERTICAL MOUNT, V-BRACKET

V61
VERTICAL MOUNT, V-BRACKET, SNAP-IN

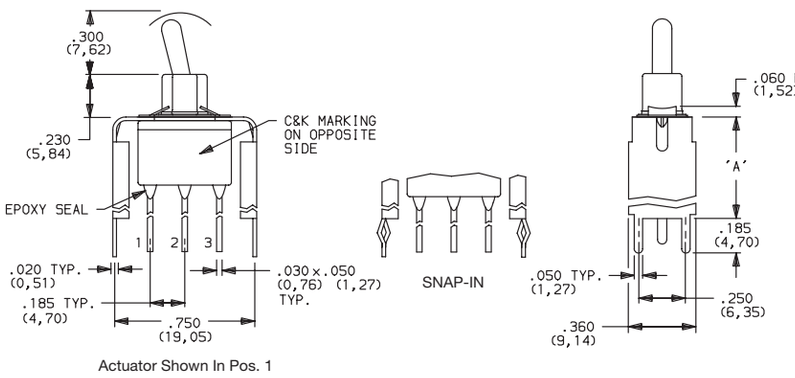

PC MOUNTING

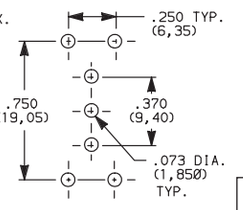

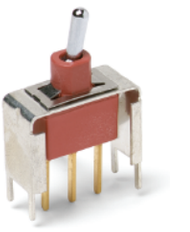

E101MD1__BE
SPDT

OPTION CODE	DIM 'A'
V6, V61	.460 (11,68)

Not available with Y bushing.

V6
VERTICAL MOUNT, V-BRACKET

V61
VERTICAL MOUNT, V-BRACKET, SNAP-IN

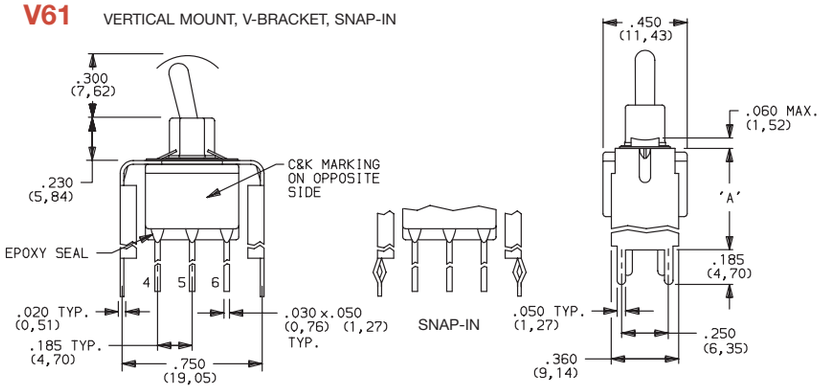

PC MOUNTING

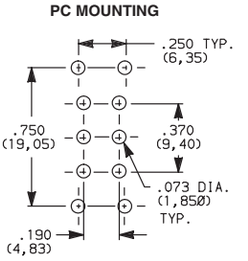

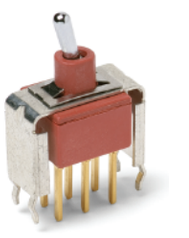

E201MD1__BE
DPDT

OPTION CODE	DIM 'A'
V6, V61	.460 (11,68)

Not available with Y bushing.

Third Angle Projection

Dimensions are shown: Inches (mm)
Specifications and dimensions subject to change

TERMINATIONS

V3, V9 VERTICAL MOUNT, V-BRACKET

V31 VERTICAL MOUNT, V-BRACKET, SNAP-IN

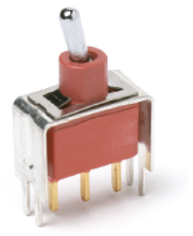

E101MD1__BE
SPDT

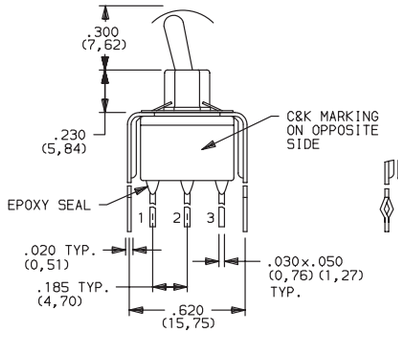

Actuator Shown In Pos. 1

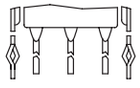

SNAP-IN

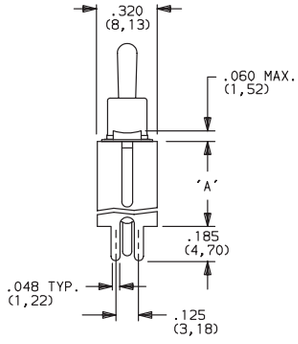

PC MOUNTING

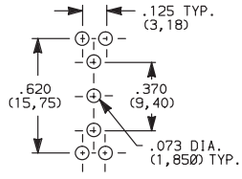

OPTION CODE	DIM 'A'
V3, V31	.460 (11,68)
V9	1.150 (29,21)

Not available with Y bushing.

V3, V9 VERTICAL MOUNT, V-BRACKET

V31 VERTICAL MOUNT, V-BRACKET, SNAP-IN

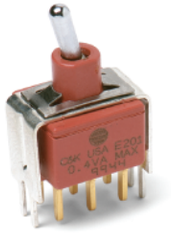

E201MD1__BE
DPDT

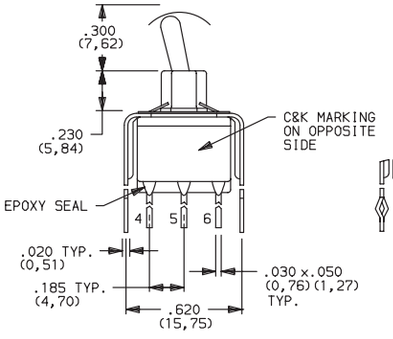

Actuator Shown In Pos. 1

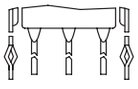

SNAP-IN

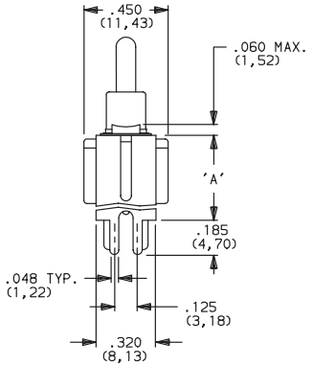

PC MOUNTING

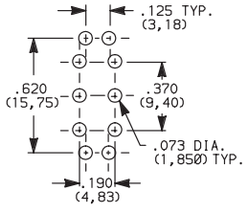

OPTION CODE	DIM 'A'
V3, V31	.460 (11,68)
V9	1.150 (29,21)

Not available with Y bushing.

V9 VERTICAL MOUNT, V-BRACKET

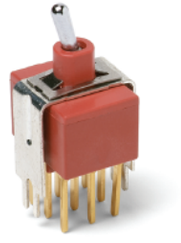

E301MD1__BE
3PDT

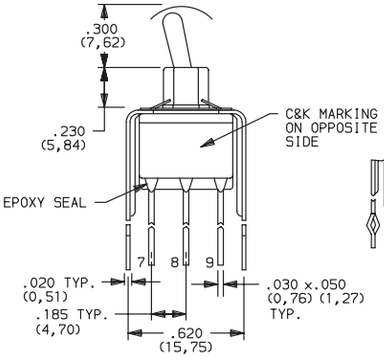

Actuator Shown In Pos. 1

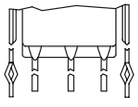

SNAP-IN

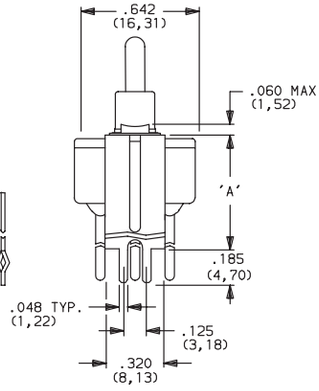

PC MOUNTING

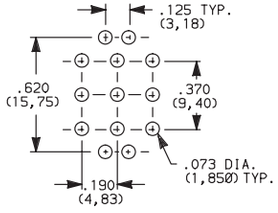

OPTION CODE	DIM 'A'
V9	1.150 (29,21)

Not available with D9 & Y bushings.

Third Angle Projection

Dimensions are shown: Inches (mm)
Specifications and dimensions subject to change

CONTACT MATERIAL

OPTION CODE	CONTACT MATERIAL	TERMINAL PLATING	RATINGS	
B	GOLD [1]	GOLD [1]	LOW LEVEL/ DRY CIRCUIT	0.4 VA MAX. @ 20 V AC OR DC MAX.
P		MATTE-TIN [6]		
Q	SILVER [4,5]	SILVER [5]	POWER	E1XX & E2XX MODELS: 7.5 AMPS @ 125 V AC OR 28 V DC; 3 AMPS @ 250 V AC. E3XX MODELS: 5 AMPS @ 125 V AC OR 28 V DC; 2 AMPS @ 250 V AC.
S		MATTE-TIN [6]		
G	GOLD OVER SILVER [2,3]	GOLD [3]	LOW LEVEL/DRY CIRCUIT OR POWER	E1XX AND E2XX MODELS: 0.4 VA MAX @20 V AC OR DC MAX. OR 7.5 AMPS @125 V AC OR 28 V DC; 3 AMPS @ 250 V AC. DC E3XX MODELS: 0.4 VA MAX. @ 20 V AC OR DC MAX. OR 5 AMPS @ 125 V AC OR 28 V DC; 2 AMPS @ 250 V AC.
R		MATTE-TIN [6]		

* Note: See Technical Data section of this catalog for RoHS compliant and compatible definitions and specifications.

[1] CONTACTS & TERMINALS: Copper alloy, with gold plate over nickel plate.

[2] END CONTACTS: Coin silver, with gold plate over nickel plate.

[3] CENTER CONTACTS & ALL TERMINALS: Copper alloy, with gold plate over nickel plate.

[4] END CONTACTS: Coin silver, silver plated.

[5] CENTER CONTACT & ALL TERMINALS: Copper alloy, with gold flash over silver plate. Or copper alloy, silver plated.

[6] TERMINALS: Copper alloy, with matte-tin over nickel plate.

NOTE: Any models supplied with P, S, R, Q, B or G contact material are RoHS compliant.

All models c UL us with all options when ordered with S, R, G, or Q contact material except with F1 conductive bushing.

B contact material standard with all terminations.

P, S & R contact materials not available with Z & Z3 terminations.

Third Angle Projection

Dimensions are shown: Inches (mm)
Specifications and dimensions subject to change

ET Series
Sealed Subminiature Toggle Switches

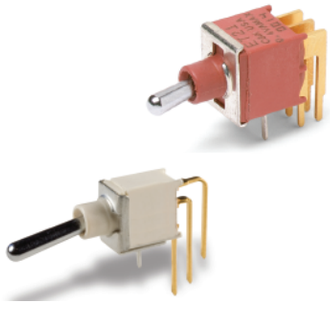

Features/Benefits

- ***Sealed against solder and cleaning process contaminants***
- ***ESD protection available***
- ***Thru-hole and surface mount models***
- ***Compact size and small footprint save PCB space***
- ***RoHS compliant models available***

Typical Applications

- ***Hand-held telecommunications***
- ***Instrumentation***
- ***Medical equipment***

c UL us

Specifications

CONTACT RATING: B contact material: 0.4 VA max. @ 20 V AC or DC max. See page F-35 for additional ratings.

ELECTRICAL LIFE: ETX1 models: 60,000 make-and-break cycles at full load. All other models: 30,000 cycles.

CONTACT RESISTANCE: Below 20 m Ω typ. initial @ 2-4 V DC, 100 mA, for both silver and gold plated contacts.

INSULATION RESISTANCE: 10^9 Ω min.

ELECTROSTATIC DISCHARGE (ESD) RESISTANT OPTION: M3 & S3 insulating actuator only: 9,000 V DC min. @ sea level, actuator to terminals. F1 conductive bushing only: Dissipates up to 20,000 V DC from actuator to ground. M3 & S3 actuator and F1 bushing options are not recommended for use together.

DIELECTRIC STRENGTH: 1000 Vrms min. @ sea level.

OPERATING TEMPERATURE: –30ºC to 85ºC.

SOLDERABILITY: Per MIL-STD-202F method 208D, or EIA RS-186E method 9 (1 hour steam aging).

DEGREE OF PROTECTION: IP57; Protection against harmful dust deposit, full-scale voltage protection, temporary immersion.

PACKAGING: Surface mount switches are shipped in tape and reel packaging, see page F-36 for drawings and reel information.

Materials

CASE & BUSHING: Glass filled nylon 6/6, flame retardant, heat stabilized (UL 94V-0) or glass filled 4/6 nylon, flame retardant, heat stabilized (UL 94V-0). F1 conductive bushing option is impregnated with carbon fibers.

ACTUATOR: M3 & S3 anti-static actuator: Nylon 4/6, black standard (UL 94V-0). All other actuators: Brass, chrome plated. Internal o-ring seal standard with all actuators.

SWITCH SUPPORT: Brass, tin plated.

CONTACTS & TERMINALS: B contact material: Copper alloy, with gold plate over nickel plate. Q contact material: Copper alloy, silver plated. See F-35 for additional contact materials.

TERMINAL SEAL: Epoxy.

NOTE: Any models supplied with Q, B, G, P or R contact material are RoHS compliant and compatible.

NOTE: Specifications and materials listed above are for switches with standard options. For information on specific and custom switches, consult Customer Service Center.

Build-A-Switch

To order, simply select desired option from each category and place in the appropriate box. Available options are shown and described on pages F–31 thru F–36. For additional options not shown in catalog, consult our Customer Service Center. All models are process sealed to withstand machine soldering temperatures and pressure wash cleaning methods.

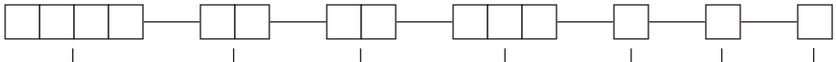

Switch Function
- **ET01** SP, On-None-On
- **ET02** SPST, Off-None-On
- **ET03** SP, On-Off-On
- **ET05** SP, Mom.-Off-Mom.
- **ET07** SP, On-Off-Mom.
- **ET08** SP, On-None-Mom.
- **ET21** DP, On-None-On
- **ET23** DP, On-Off-On
- **ET24** DP, On-On-On
- **ET25** DP, Mom.-Off-Mom.
- **ET27** DP, On-Off-Mom.
- **ET28** DP, On-None-Mom.

Actuator
- **M** .240" high
- **M3** Plastic, anti-static, .240" high
- **S** .400" high
- **L** .320" high
- **S1** .540" high

Bushing
- **D1** .177" High, Unthreaded
- **F1** .177" high, unthreaded, ESD conductive

Terminations
- **A** Right angle, PC thru-hole
- **AV** Vertical right angle, PC thru-hole
- **C** PC Thru-hole
- **SA** Right angle, surface mount
- **SA1** Right angle, surface mount rear-facing
- **V3** Vertical mount, V-bracket
- **AV3** Vertical right angle, snap-in, PC thru-hole
- **V31** Vertical mount, V-bracket, snap-in
- **W** Wire wrap

Contact Material
- **B** Gold
- **P** Gold, matte tin
- **Q** Silver
- **S** Silver/matte-tin
- **G** Gold over silver
- **R** Gold over silver, matte-tin

Seal
- **E** Epoxy

Plastic Actuator Color
- **NONE** No actuator color
- **2** Black
- **1** White

SWITCH FUNCTION

NO. POLES	MODEL NO.	SWITCH FUNCTION POS. 1	SWITCH FUNCTION POS. 2	SWITCH FUNCTION POS. 3	CONNECTED TERMINALS POS. 1	CONNECTED TERMINALS POS. 2	CONNECTED TERMINALS POS. 3	SCHEMATIC
		C&K marking on opposite side			C&K marking on opposite side			
SP	ET01	ON	NONE	ON	2-3	N/A	2-1	
	ET03	ON	OFF	ON	2-3	OPEN	2-1	
	ET05	MOM.	OFF	MOM.				
	ET07	ON	OFF	MOM.				
	ET08	ON	NONE	MOM.	2-3	N/A	2-1	SPDT
	ET02	OFF	NONE	ON	OPEN	N/A	3-1	SPST

SPDT

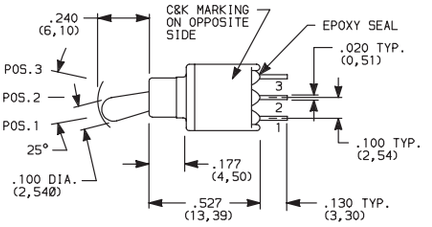

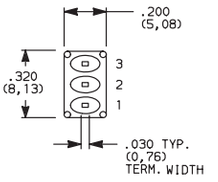

Terminal Nos.
For Reference Only

Part number shown: ET01MD1CBE

ET02 Models: Omit terminal 2

DP	ET21	ON	NONE	ON	2-3,5-6	N/A	2-1,5-4	
	ET23	ON	OFF	ON	2-3,5-6	OPEN	2-1,5-4	
	ET25	MOM.	OFF	MOM.				
	ET27	ON	OFF	MOM.				
	ET28	ON	NONE	MOM.	2-3,5-6	N/A	2-1,5-4	
	ET24**	ON	ON	ON	2-3,5-6	2-3,5-4	2-1,5-4	DPDT

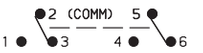

DPDT

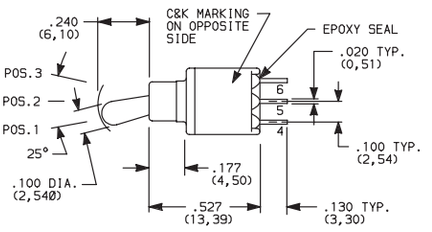

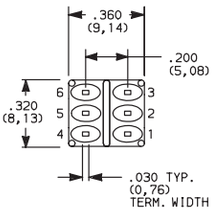

Terminal Nos.
For Reference Only

Part number shown: ET21MD1CBE

MOM. = Momentary

** Wiring for 3-way switch, see Section N.

All models c UL us with all options (except M3 actuator) when ordered with G, L, R or Q contact material except with F1 conductive bushing.

Third Angle Projection

Dimensions are shown: Inches (mm)
Specifications and dimensions subject to change

ET Series
Sealed Subminiature Toggle Switches

ACTUATOR

ACTUATOR COLOR

M .240" HIGH

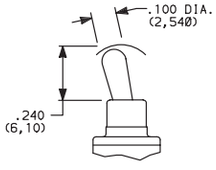

Standard with A, AV, V3 & V31 terminations.

M3 PLASTIC, ANTISTATIC, .240" HIGH

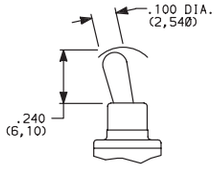

Material: Nylon 4/6 (UL 94V-0), black standard. Static resistance: 9,000 V DC min. @ sea level, actuator to terminals. Not available with F1 conductive bushing option. Not UL approved.

S .400" HIGH

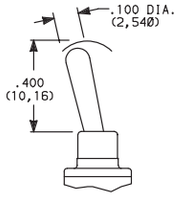

Standard with C or W terminations.

L .320" HIGH

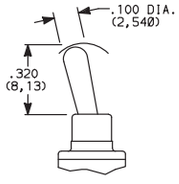

S1 .540" HIGH

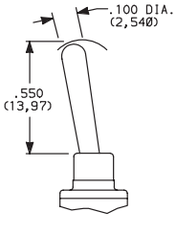

OPTION CODE	PLASTIC ACTUATOR COLOR
(NONE)	BLACK (M3 & S3 only)
1	WHITE (M3 & S3 only)

NOTE: All actuators have chrome finish (except M3 & S3).

BUSHING

D1 .177" HIGH, UNTHREADED

F1 ESD, CONDUCTIVE BUSHING UNTHREADED, .177" HIGH

F1 bushing is not UL approved

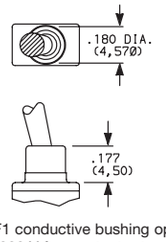

NOTE: ESD protection depends on proper grounding of switch support bracket. F1 conductive bushing option is impregnated with carbon fibers; dissipates electrostatic discharge (ESD) up to 20,000 V from actuator to ground.

Available with all metal actuator options and A, AV, AV3, V3 and V31 termination options only.

Internal actuator o-ring seal standard.

TERMINATIONS

C PC THRU-HOLE

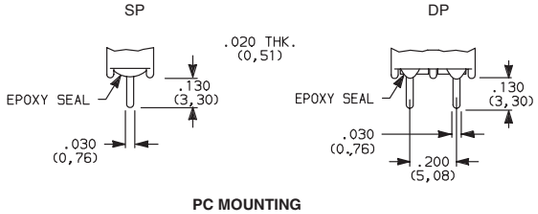

PC MOUNTING

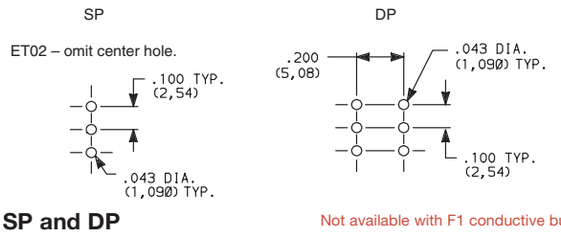

SP and DP

Not available with F1 conductive bushing.

W WIRE WRAP

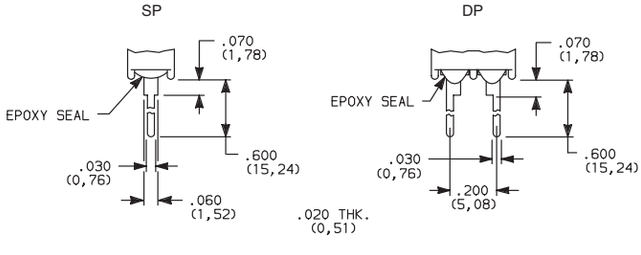

Not available with F1 conductive bushing.

SP and DP

Third Angle Projection

Dimensions are shown: Inches (mm)
Specifications and dimensions subject to change

TERMINATIONS

A RIGHT ANGLE, PC THRU-HOLE

ET01MD1ABE
Horizontal Actuation
SPDT

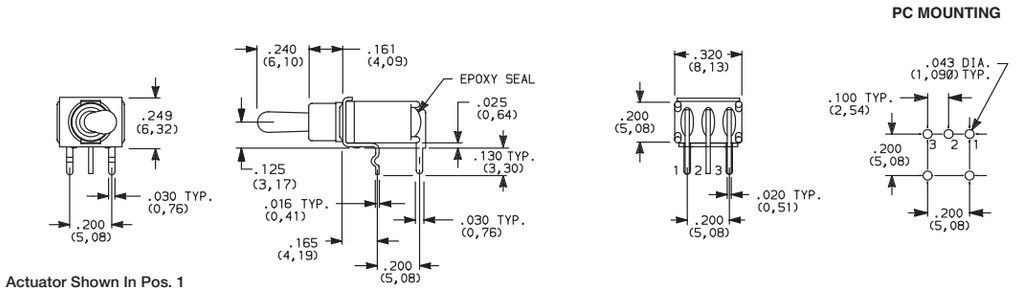

Actuator Shown In Pos. 1

Not available with ET02 model.

A RIGHT ANGLE, PC THRU-HOLE

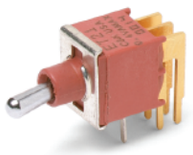

ET21MD1ABE
Horizontal Actuation
DPDT

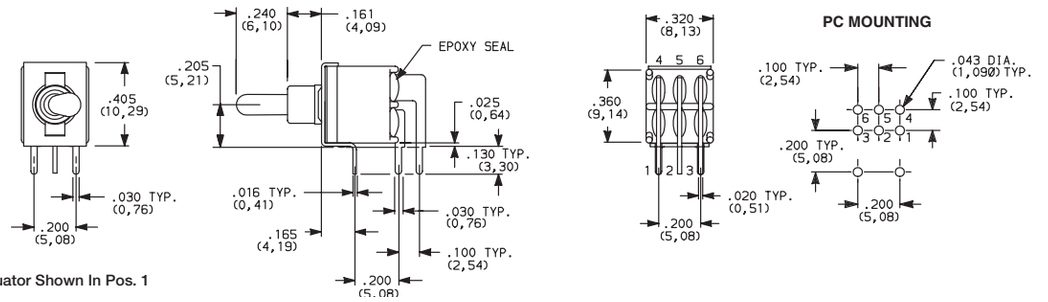

Actuator Shown In Pos. 1

AV VERTICAL RIGHT ANGLE, PC THRU-HOLE

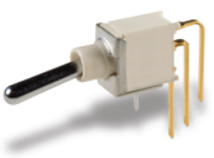

ET01MD1AVBE
Vertical Actuation
SPDT

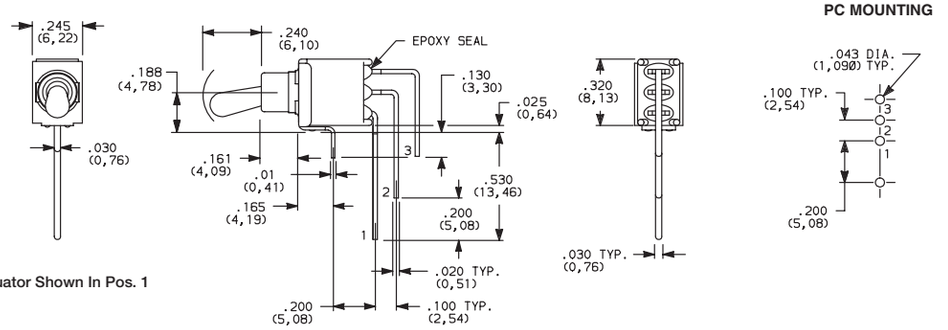

Actuator Shown In Pos. 1

ET02 - omit terminal 2.

NOTE: Terminal bend radii and lead-in manufacturing option.

AV VERTICAL RIGHT ANGLE, PC THRU-HOLE

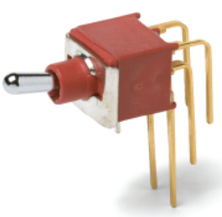

ET21MD1AVBE
Vertical Actuation
DPDT

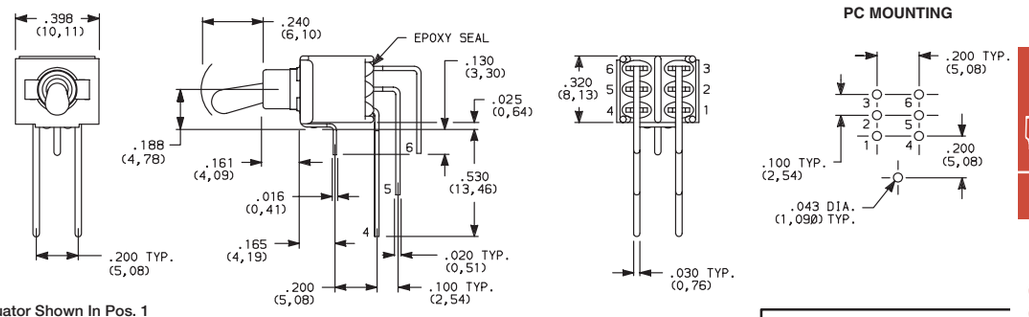

Actuator Shown In Pos. 1

NOTE: Terminal bend radii and lead-in manufacturing option.

Third Angle Projection

Dimensions are shown: Inches (mm)
Specifications and dimensions subject to change

ET Series
Sealed Subminiature Toggle Switches

TERMINATIONS

AV3 VERTICAL RIGHT ANGLE, SNAP-IN, PC THRU-HOLE

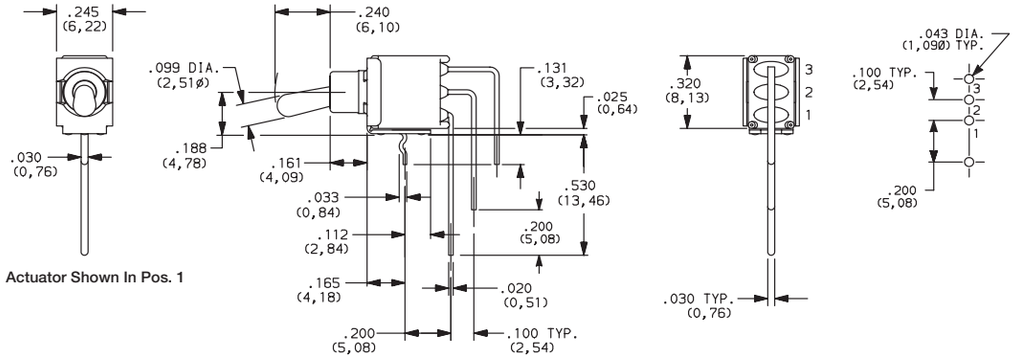

Actuator Shown In Pos. 1

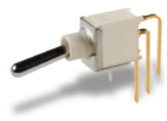

ET01SD1AV2BE
Vertical Actuation
SPDT

SA RIGHT ANGLE, SURFACE MOUNT

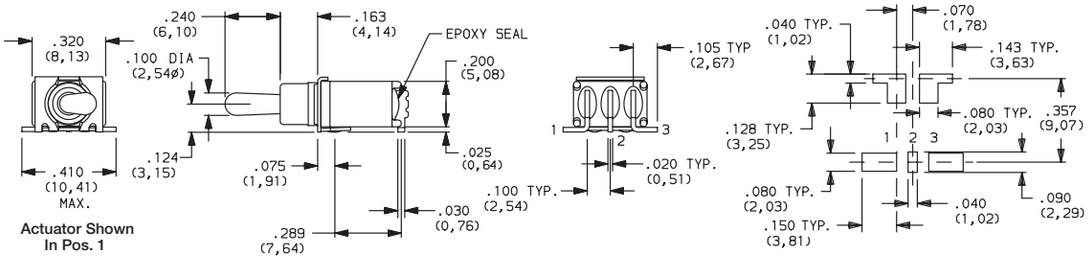

Actuator Shown In Pos. 1

ET01M3D1SAPE
Horizontal Actuation
SPDT Only

Not available with S and S1 actuators. Standard with tape & reel packaging, See page F-36.

SA1 RIGHT ANGLE, SURFACE MOUNT

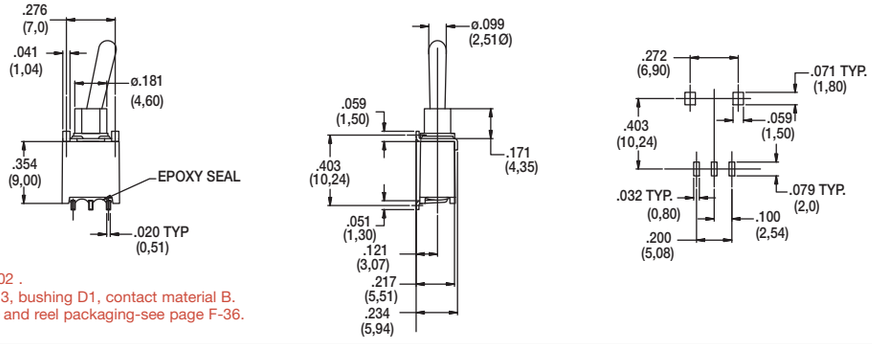

ET01M3D1SA1BE
Horizontal Actuation
SPDT Only

Not available in ET02 .
Actuators M and M3, bushing D1, contact material B.
Standard with tape and reel packaging-see page F-36.

V3 VERTICAL MOUNT, V-BRACKET
V31 VERTICAL MOUNT, V-BRACKET, SNAP-IN

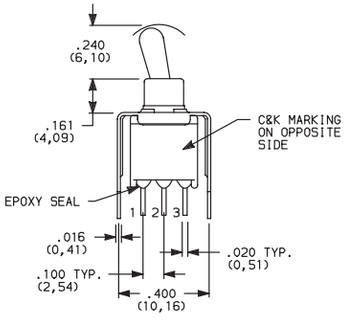

Actuator Shown In Pos. 1
ET02 Models: Omit terminal 2

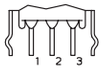

V31 Snap-In

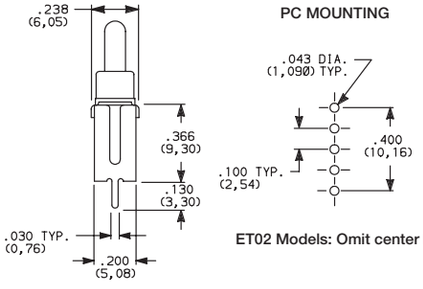

ET02 Models: Omit center hole

ET01MD1V3BE
SPDT

Third Angle Projection

Dimensions are shown: Inches (mm)
Specifications and dimensions subject to change

TERMINATIONS

V3 VERTICAL MOUNT, V-BRACKET

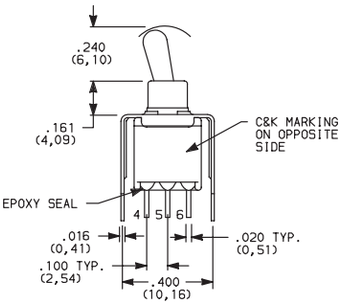

Actuator Shown In Pos. 1

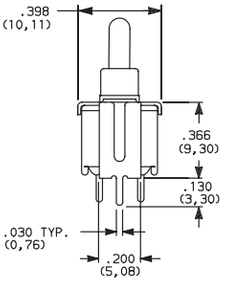

PC MOUNTING

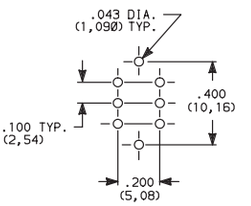

ET21MD1V3BE
DPDT

CONTACT MATERIAL

OPTION CODE	CONTACT MATERIAL	TERMINAL PLATING	RATINGS	
B	GOLD [1]	GOLD [1]	LOW LEVEL/DRY CIRCUIT	0.4 VA MAX. @ 20 V AC OR DC MAX.
P		MATTE-TIN [6]		
Q	SILVER [4,5]	SILVER [5]	POWER	ETX1 MODELS: 3 AMPS @ 120 V AC OR 28 V DC ALL OTHER MODELS: 2 AMPS @ 120 V AC OR 28 V DC
S		MATTE-TIN [6]		
G	GOLD OVER SILVER [2,3]	GOLD [3]	LOW LEVEL/DRY CIRCUIT OR POWER	ETX1 MODELS: 0.4 VA MAX. @ 20 V AC OR DC MAX. OR 3 AMPS @ 120 V AC OR 28 V DC ALL OTHER MODELS: 0.4 VA MAX. @ 20 V AC OR DC MAX. OR 2 AMPS @ 120 V AC OR 28 V DC
R		MATTE-TIN [6]		

* Note: See Technical Data section of this catalog for RoHS compliant and compatible definitions and specifications.

[1] CONTACTS & TERMINALS: Copper alloy, with gold plate over nickel plate.
[2] END CONTACTS: Coin silver, with gold plate over nickel plate.
[3] CENTER CONTACTS & ALL TERMINALS: Copper alloy, with gold plate over nickel plate.
[4] END CONTACTS: Coin silver, silver plated.
[5] CENTER CONTACT & ALL TERMINALS: Copper alloy, silver plated.
[6] TERMINALS: Copper alloy, with matte tin over nickel plate.

NOTE: Any models supplied with Q, B , G, P or R contact material are RoHS compliant.

All models c UL us with all options (except M3 actuator) when ordered with G, L, R or Q contact material except with F1 conductive bushing.

SEAL

E EPOXY SEAL

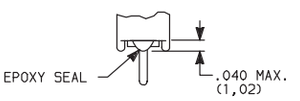

AVAILABLE HARDWARE

Cap

PART NO.

706201000	WHITE
706202000	BLACK
706203000	RED

Material: Vinyl
Finish: Matte

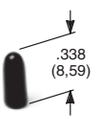

NOTE: Other colors available, consult Customer Service Center.

Third Angle Projection

Dimensions are shown: Inches (mm)
Specifications and dimensions subject to change

TAPE & REEL

For part number ET01M3D1SAPE

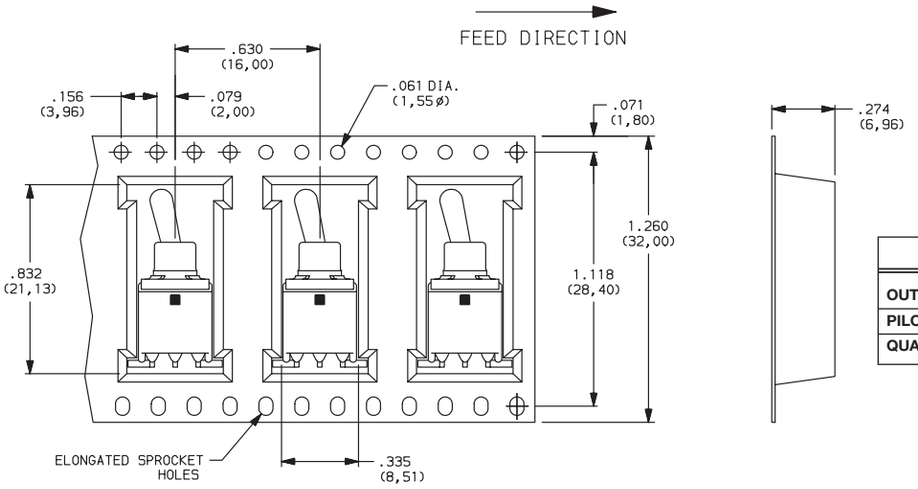

REEL INFORMATION	
OUTSIDE DIAMETER	13.00 (330,0)
PILOT HOLE	.512 (13,0)
QUANTITY PER REEL	600

For part number ET01M3D1SA1BE

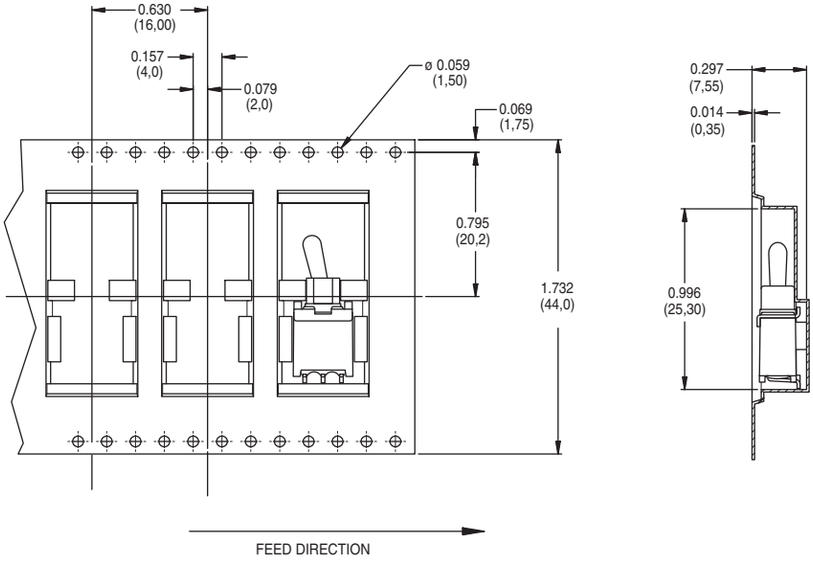

REEL INFORMATION	
OUTSIDE DIAMETER	13.00 (330,0)
PILOT HOLE	.795 (20,20)
QUANTITY PER REEL	500

Third Angle Projection

Dimensions are shown: Inches (mm)
Specifications and dimensions subject to change

T Series
Subminiature Toggle Switches

Features/Benefits

- ***Compact size—small footprint***
- ***Single and double pole models***
- ***PC and panel mount options available***
- ***RoHS compliant models available***

Typical Applications

- ***Hand-held telecommunications***
- ***Instrumentation***
- ***Medical equipment***

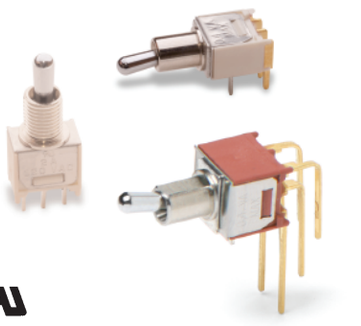

Specifications

CONTACT RATING: B contact material: 0.4 VA max. @ 20 V AC or DC max. Q contact material (TX01 models): 3 AMPS @ 120 V AC or 28 V DC. All other models: 2 AMPS @ 120 V AC or 28 V DC. See page F-42 for additional ratings.

ELECTRICAL LIFE: TX01 models: 60,000 make-and-break cycles at full load. All other models: 30,000 cycles.

CONTACT RESISTANCE: Below 20 m Ω typ. initial @ 2-4 V DC, 100 mA, for both silver and gold plated contacts.

INSULATION RESISTANCE: 10^9 Ω min.

DIELECTRIC STRENGTH: 1000 Vrms min. @ sea level.

OPERATING TEMPERATURE: –30°C to 85°C.

SOLDERABILITY: Per MIL-STD-202F method 208D, or EIA RS-186E method 9 (1 hour steam aging).

NOTE: Any models supplied with P, R, Q, B or G contact material are RoHS compliant and compatible.

NOTE: Specifications and materials listed above are for switches with standard options. For information on specific and custom switches, consult Customer Service Center.

Materials

CASE: Glass filled nylon 6/6, flame retardant, heat stabilized or diallyl phthalate (DAP), (UL 94V-0) or glass filled nylon 4/6, flame retardant, heat stabilized.

ACTUATOR: Brass, chrome plated.

BUSHING: Brass, nickel plated.

HOUSING: Stainless steel.

SWITCH SUPPORT: Brass, matte-tin plated.

END CONTACTS: B contact material: Copper alloy, with gold plate over nickel plate. Q contact material: Coin silver, silver plated. See above for additional contact materials.

CENTER CONTACTS & TERMINALS: B contact material: Copper alloy, with gold plate over nickel plate. Q contact material: Copper alloy, silver plated. See page F-42 for additional contact materials.

TERMINAL SEAL: Epoxy.

HARDWARE: Nut & Locking Ring: Brass, nickel plated. Lockwasher: Steel, nickel plated. Additional hardware available separately, see Section N.

Build-A-Switch

To order, simply select desired option from each category and place in the appropriate box. Available options are shown and described on pages F-38 thru F-42. For additional options not shown in catalog, consult Customer Service Center. All models have epoxy terminal seal and are compatible with all "bottom-wash" PCB cleaning methods.

Switch Function

- **T101** SPDT On-None-On
- **T102** SPDT Off-None-On
- **T103** SPDT On-Off-On
- **T105** SPDT Mom.-Off-Mom.
- **T107** SPDT On-Off-Mom.
- **T108** SPDT On-None-Mom.
- **T201** DPDT On-None-On
- **T203** DPDT On-Off-On
- **T205** DPDT Mom.-Off-Mom.
- **T207** DPDT On-Off-Mom.
- **T208** DPDT On-None-Mom.
- **T211** DPDT On-On-On.

Actuator

- **P3** Flatted, anti-rotation, .490" high
- **S** .370" high
- **K** Locking lever, round tip
- **L1** .640" high
- **M1** .220" high
- **S1** .410" high
- **M** .210" high
- **L** .290" high

Bushing

- **H** .220" high, threaded, flat
- **H9** .220" high, unthreaded, flat
- **CF** Splashproof, .310" high, threaded, flat
- **D9** .260" high, unthreaded, keyway
- **T** .310" high, threaded, flat
- **T9** .310" high, unthreaded, flat
- **TD** .260" high, threaded, keyway
- **TK** .310" high, threaded, keyway
- **Y** .220" high, threaded, keyway
- **Y9** .220" high, unthreaded, keyway

Terminations

- **A** Right angle, PC thru-hole
- **AV** Vertical right angle, PC thru-hole
- **C** PC Thru-hole
- **V3** Vertical mount V-bracket
- **Z** Solder lug
- **W** Wire wrap

Contact Material

- **B** Gold
- **P** Gold, matte tin
- **Q** Silver
- **G** Gold over silver
- **R** Gold over silver, matte-tin

Seal

- **E** Epoxy

T Series
Subminiature Toggle Switches

SWITCH FUNCTION

NO. POLES	MODEL NO.	SWITCH FUNCTION POS. 1	SWITCH FUNCTION POS. 2	SWITCH FUNCTION POS. 3	CONNECTED TERMINALS POS. 1	CONNECTED TERMINALS POS. 2	CONNECTED TERMINALS POS. 3	SCHEMATIC
		C&K marking on opposite side			C&K marking on opposite side			
SP	T101	ON	NONE	ON	2-3	N/A	2-1	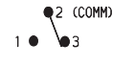
	T103	ON	OFF	ON	2-3	OPEN	2-1	
	T105	MOM.	OFF	MOM.				
	T107	ON	OFF	MOM.				
	T108	ON	NONE	MOM.	2-3	NA	2-1	SPDT
	T102	OFF	NONE	ON	OPEN	N/A	3-1	SPST

SPDT

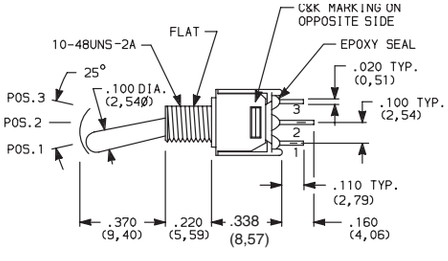

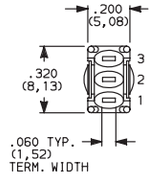

Part number shown: T101SHZQE

NO. POLES	MODEL NO.	SWITCH FUNCTION POS. 1	SWITCH FUNCTION POS. 2	SWITCH FUNCTION POS. 3	CONNECTED TERMINALS POS. 1	CONNECTED TERMINALS POS. 2	CONNECTED TERMINALS POS. 3	SCHEMATIC
		C&K marking on opposite side			C&K marking on opposite side			
DP	T201	ON	NONE	ON	2-3,5-6	N/A	2-1,5-4	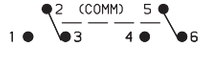
	T203	ON	OFF	ON	2-3,5-6	OPEN	2-1,5-4	
	T205	MOM.	OFF	MOM.				
	T208	ON	NONE	MOM.	2-3,5-6	N/A	2-1,5-4	
	T211*	ON	ON	ON.	2-3,5-6	2-3,5-4	2-1,5-4	DPDT

DPDT

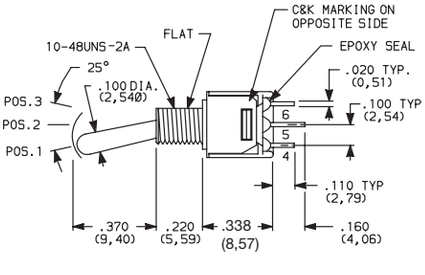

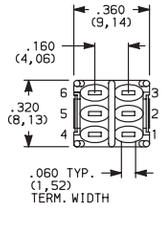

Terminal Nos.
For Reference Only

Part number shown: T201SHZQE

MOM. = Momentary
* Wiring for 3-way switch refer to page N-10

All models ® with all options when ordered with G, L, R or Q contact material.

Third Angle Projection

Dimensions are shown: Inches (mm)
Specifications and dimensions subject to change

ACTUATOR

M .210" HIGH

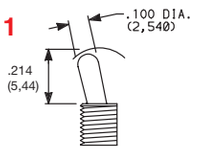

Standard with A, AV or V3 terminations.

S .370" HIGH

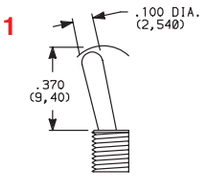

Standard with Z, C or W terminations.

M1 .220" HIGH
(with "T" bushing)

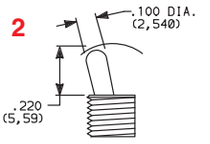

S1 .410" HIGH
(with "T" bushing)

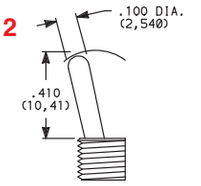

L .290" HIGH

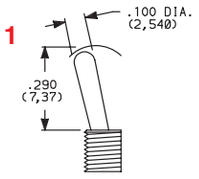

L1 .640" HIGH

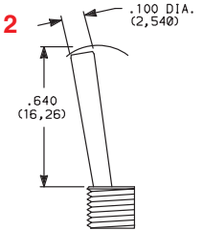

P3 ANTI-ROTATION, FLATTED,
.450" HIGH

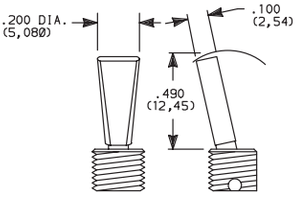

Available with T & T9 bushings only.
Dress nut part number 709901201
supplied standard with threaded bushing.

[1] Actuator shown with standard H bushing. Subtract .040 (1,02) for TD and D9 bushings, subtract .090 (2,29) for T, T9, TK, K9 & CF bushings.

[2] Actuators shown with T, T9, TK & CF bushings, add .050 (1,27) for TD and D9 bushings, add .090 (2,29) for H, H9, Y & Y9 bushings.

All actuators have chrome finish (except K).

K LOCKING LEVER

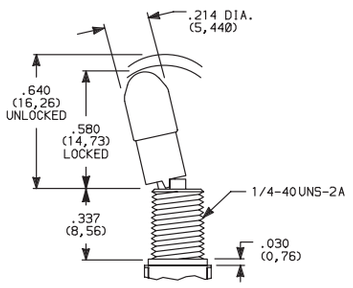

Not available with CF bushing option.

Bushing option code not required. Not available with TX05 & TX07 models.

Locking Positions

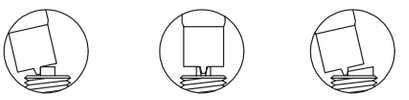

–01 & –02 Models
2 Position lock

–03 & –11 Models
3 Position lock

–08 Models
1 Position lock

K actuators have natural aluminum finish.

Keyway on right side. To prevent accidental actuation, toggles must be lifted before being actuated. When released, toggles again lock in place. Overtightening mounting nut may cause actuator to bind.

BUSHING

H .220" HIGH THREADED, FLAT

H9 .220" HIGH UNTHREADED, FLAT

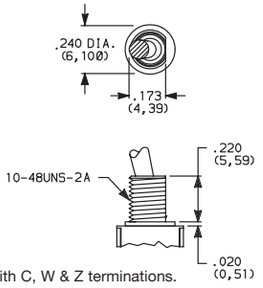

H standard with C, W & Z terminations.
H9 standard with A, AV & V3 terminations.

Y .220" HIGH THREADED, KEYWAY

Y9 .220" HIGH UNTHREADED, KEYWAY

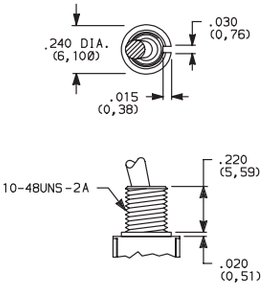

T .310" HIGH THREADED, FLAT

T9 .310" HIGH UNTHREADED, FLAT

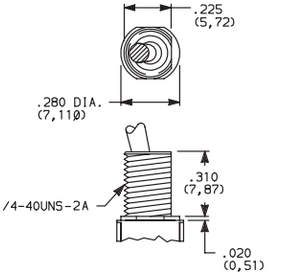

Third Angle Projection

Dimensions are shown: Inches (mm)
Specifications and dimensions subject to change

T Series
Subminiature Toggle Switches

BUSHING

TK .310" HIGH THREADED, KEYWAY

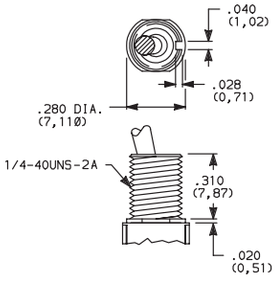

TD .260" HIGH THREADED, KEYWAY

D9 .260" HIGH UNTHREADED, KEYWAY

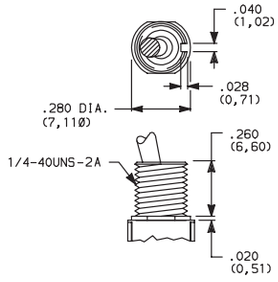

CF SPLASHPROOF, .310" HIGH THREADED, FLAT

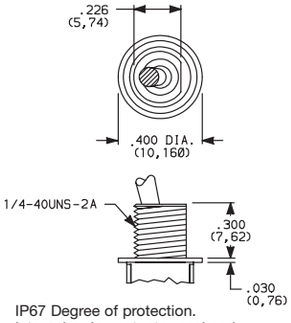

IP67 Degree of protection.
Internal o-ring actuator seal and external bushing seal washer standard.

Not available with K locking lever option.

10-48 BUSHING

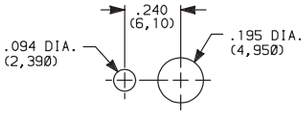

With Standard Locking Ring

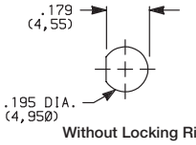

Without Locking Ring

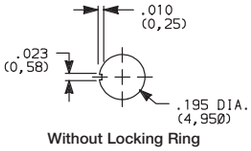

Without Locking Ring

PANEL MOUNTING

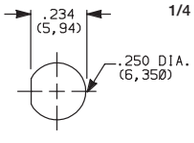

Without Locking Ring

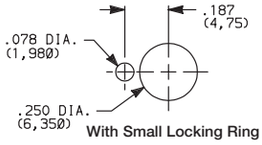

With Small Locking Ring

1/4 IN. BUSHING

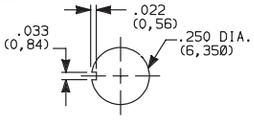

Without Locking Ring

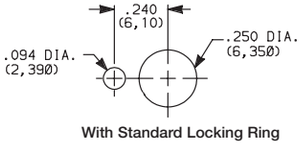

With Standard Locking Ring

TERMINATIONS

Z SOLDER LUG

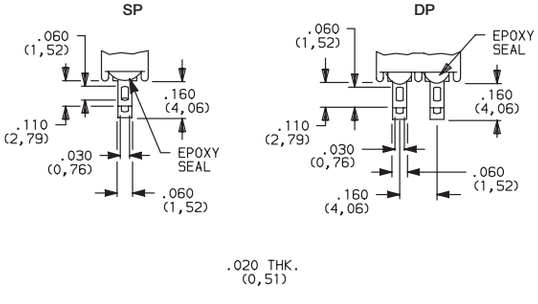

Not available with P or R contact materials.

C PC THRU-HOLE

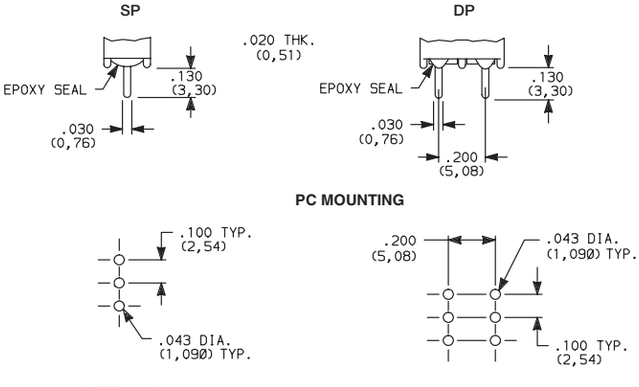

T102 – omit center hole.

W WIRE WRAP

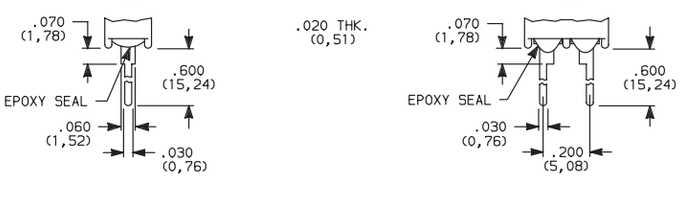

Third Angle Projection

Dimensions are shown: Inches (mm)
Specifications and dimensions subject to change

TERMINATIONS

A RIGHT ANGLE, PC THRU-HOLE

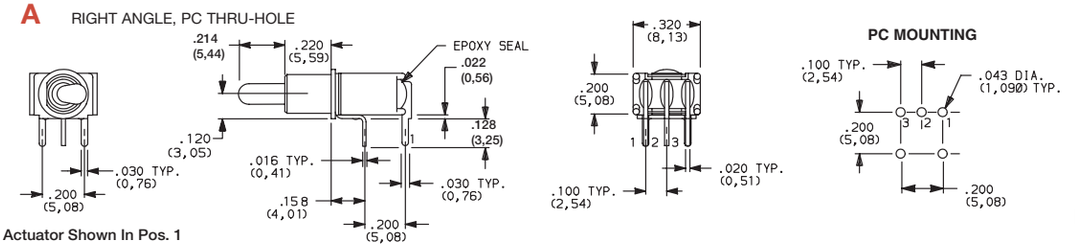

Actuator Shown In Pos. 1

Not available with T102 model.

T101MH9ABE
Horizontal Actuation
SPDT

A RIGHT ANGLE, PC THRU-HOLE

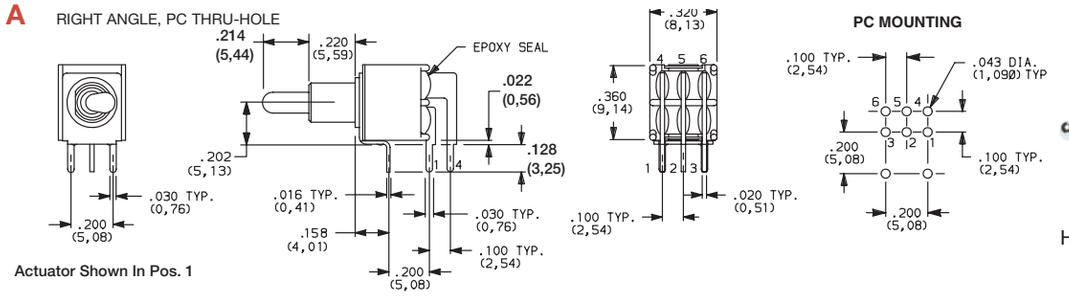

Actuator Shown In Pos. 1

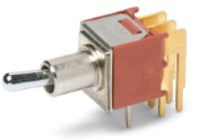

T201MH9ABE
Horizontal Actuation
DPDT

AV VERTICAL RIGHT ANGLE, PC THRU-HOLE

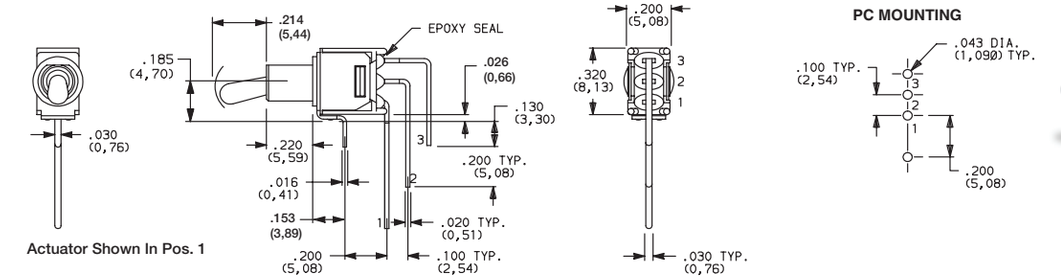

Actuator Shown In Pos. 1

T102 Models: Omit terminal 2

NOTE: Terminal bend radii and lead-in manufacturing option.

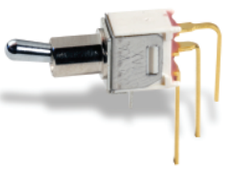

T101MH9AVBE
Vertical Actuation
SPDT

AV VERTICAL RIGHT ANGLE, PC THRU-HOLE

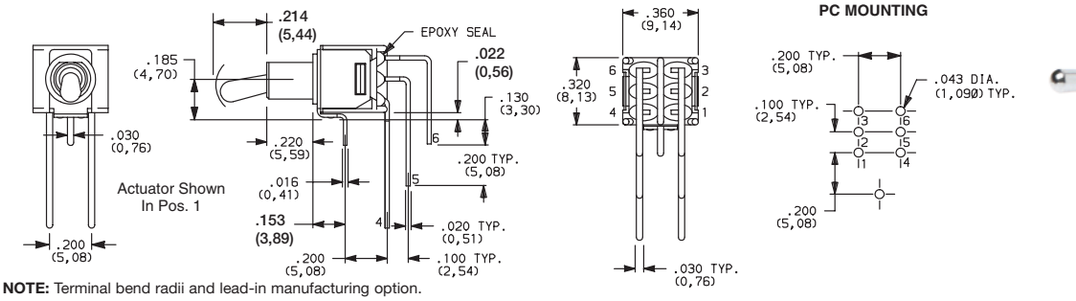

Actuator Shown In Pos. 1

NOTE: Terminal bend radii and lead-in manufacturing option.

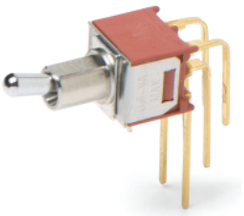

T201MH9AVBE
Vertical Actuation
DPDT

V3 VERTICAL MOUNT, V-BRACKET

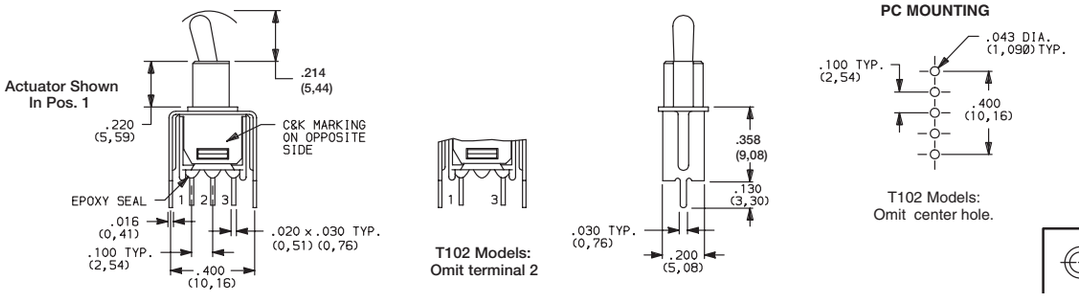

T101MH9V3BE
SPDT

Third Angle Projection

Dimensions are shown: Inches (mm)
Specifications and dimensions subject to change

T Series
Subminiature Toggle Switches

TERMINATIONS

V3 VERTICAL MOUNT, V-BRACKET

T201MH9V3BE
DPDT

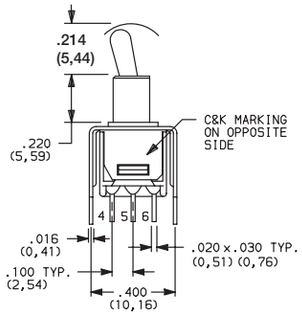

Actuator Shown In Pos. 1

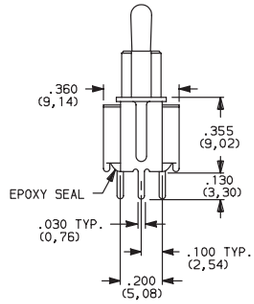

PC MOUNTING

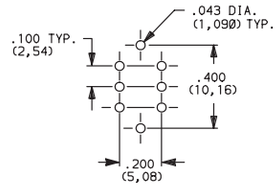

CONTACT MATERIAL

OPTION CODE	CONTACT MATERIAL	TERMINAL PLATING	RATINGS	
B	GOLD [1]	GOLD [1]	LOW LEVEL/ DRY CIRCUIT	0.4 VA MAX. @ 20 V AC OR DC MAX.
P		MATTE-TIN [6]		
Q	SILVER [4,5]	SILVER [5]	POWER	TX01 MODELS: 3 AMPS @ 120 V AC OR 28 V DC. ALL OTHER MODELS: 2 AMPS @ 120 V AC OR 28 V DC.
G	GOLD OVER SILVER [2,3]	GOLD [3]	LOW LEVEL/DRY CIRCUIT OR POWER	TX01 MODELS: 0.4 VA MAX @ 20 V AC OR DC MAX. OR 3 AMPS @ 120 V AC OR 28 V DC. ALL OTHER MODELS: 0.4 VA MAX @ 20 V AC OR DC MAX. OR 2 AMPS @ 120 V AC OR 28 V DC.
R		MATTE-TIN [6]		

* Note: See Technical Data section of this catalog for RoHS compliant and compatible definitions and specifications.

[1] CONTACTS & TERMINALS: Copper alloy, with gold plate over nickel plate.
[2] END CONTACTS: Coin silver, with gold plate over nickel plate.
[3] CENTER CONTACTS & ALL TERMINALS: Copper alloy, with gold plate over nickel plate.
[4] END CONTACTS: Coin silver, silver plated.
[5] CENTER CONTACT & ALL TERMINALS: Copper alloy, silver plated.
[6] TERMINALS: Copper alloy, with matte-tin over nickel plate.

All models ®RU with all options when ordered with R, G, or Q contact material.
B contact material standard with A, AV, V3 & W terminations.
Q contact material standard with C & Z terminations.

SEAL

E EPOXY SEAL

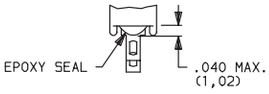

AVAILABLE HARDWARE

759D02000 SEALING BOOT

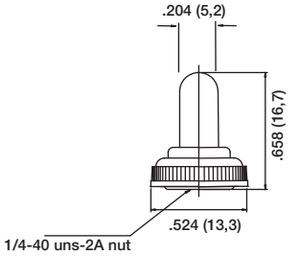

* Note: For use with S1 actuator style when combined with T, TK, and CF bushings.

Third Angle Projection

Dimensions are shown: Inches (mm)
Specifications and dimensions subject to change

GT Series
Sealed Ultraminiature Toggle Switches

Features/Benefits

- ***Sealed against solder and cleaning process contaminants***
- ***Ultraminiature size, smallest footprint available***
- ***Thru-hole and surface mount models***
- ***High temperature materials (UL 94V-0)***
- ***RoHS compliant and compatible***

Typical Applications

- ***Hand-held telecommunications***
- ***Small instrumentation***

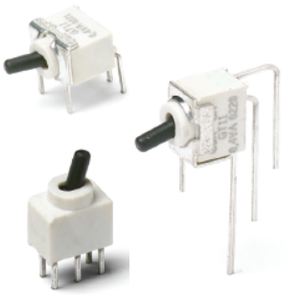

Specifications

CONTACT RATING: 0.4 VA max. @ 20 V AC or DC max.

MECHANICAL & ELECTRICAL LIFE: 40,000 make-and-break cycles at full load.

CONTACT RESISTANCE: Below 50 m Ω typ. initial @ 2-4 V DC, 100 mA.

INSULATION RESISTANCE: 10^9 Ω min.

DIELECTRIC STRENGTH: 500 Vrms min. @ sea level.

OPERATING TEMPERATURE: –30°C to 85°C.

SOLDERABILITY: Per MIL-STD-202F method 208D, or EIA RS-186E method 9 (1 hour steam aging).

PACKAGING: Surface mount switches shipped in anti-static tape and reel packaging per EIA 481-3, see page F-47 for drawings and reel information. Tape and cover strip are conductive for use near statically sensitive components, consult Customer Service Center.

Materials

HOUSING AND BASE: Glass filled nylon 4/6, flame retardant, heat stabilized (UL 94V-0).

ACTUATOR: Glass filled nylon 4/6, flame retardant, heat stabilized (UL 94V-0), with standard internal o-ring seal.

SWITCH SUPPORT: Brass, tin plated.

MOVABLE CONTACTS: Copper alloy, with gold plate over nickel plate.

STATIONARY CONTACTS: Copper alloy, with gold plate over nickel plate.

TERMINALS: Gold.

TERMINAL SEAL: Epoxy. All terminals insert molded.

NOTE: Specifications and materials listed above are for switches with standard options. For information on specific and custom switches, consult Customer Service Center.

How To Order

Complete part numbers for GT Series Sealed Ultraminiature Toggle Switches are shown on pages F–43 thru F–47.

GT11MCBE
SPDT

PART NUMBER	SWITCH FUNCTION POS.1	POS. 2	POS. 3
GT11MCBE	ON	NONE	ON
GT13MCBE	ON	OFF	ON
Conn. Terms.	2-3	OPEN	2-1
Schematic	1 ● ● 2 (COMM) ● 3		
SPDT	Note: Pins 4 and 6 not connected		
GT12MCBE	OFF	NONE	ON
Conn. Terms.	OPEN	N/A	3-1
Schematic	1 ● ● 3		
SPST	Note: Pins 4 and 6 not connected		

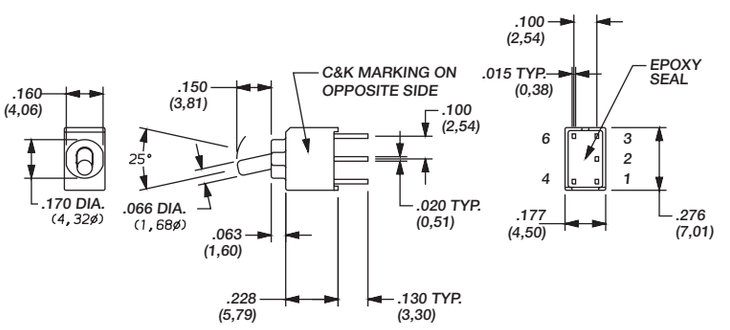

ACTUATOR SHOWN IN POS. 1

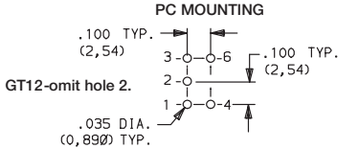

TERMINAL NOS. FOR REFERENCE ONLY

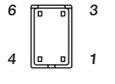

GT12 MODEL
TERMINALS 1,3,4 & 6 ONLY

F
Toggle

Dimensions are shown: Inches (mm)
Specifications and dimensions subject to change

GT Series
Sealed Ultraminiature Toggle Switches

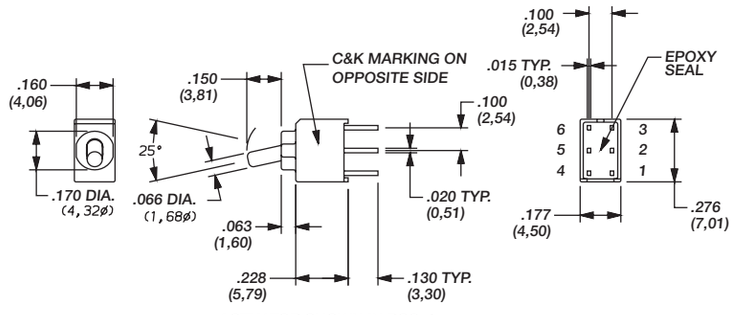

ACTUATOR SHOWN IN POS. 1

PC MOUNTING

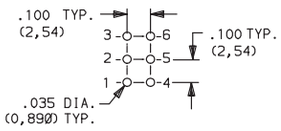

GT22-omit holes 2 & 5.

TERMINAL NOS. FOR REFERENCE ONLY

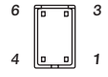

GT22 MODEL
TERMINALS 1,3,4 & 6 ONLY

PART NUMBER	SWITCH FUNCTION POS.1	POS. 2	POS. 3
GT21MCBE	ON	NONE	ON
GT23MCBE	ON	OFF	ON
Conn. Terms.	2-3, 5-6	OPEN	2-1, 5-4
Schematic DPDT	2 (COMM) 5; 1 3; 4 6		
GT22MCBE	OFF	NONE	ON
Conn. Terms.	OPEN	N/A	3-1
Schematic DPST	3 6; 1 4		

GT21MCBE
DPDT

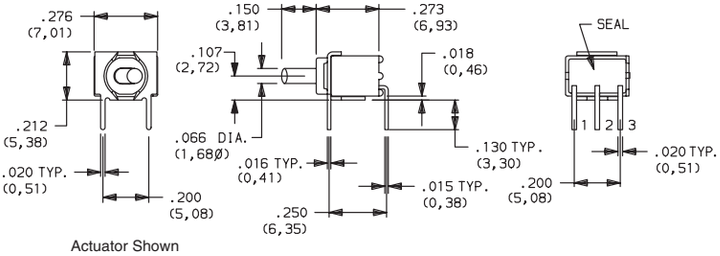

Actuator Shown
In Pos. 1

PC MOUNTING

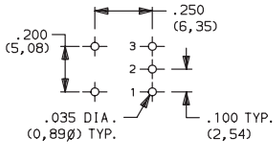

GT12-omit hole 2.

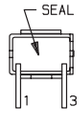

GT12 Models

PART NUMBER	SWITCH FUNCTION POS.1	POS. 2	POS. 3
GT11MABE	ON	NONE	ON
GT13MABE	ON	OFF	ON
Conn. Terms.	2-3	OPEN	2-1
Schematic SPDT	2 (COMM); 1 3		
GT12MABE	OFF	NONE	ON
Conn. Terms.	OPEN	N/A	3-1
Schematic SPST	1 3		

GT11MABE
Horizontal
Actuation
SPDT

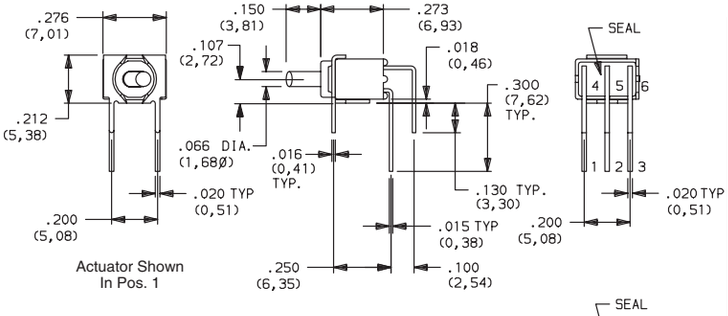

Actuator Shown
In Pos. 1

PC MOUNTING

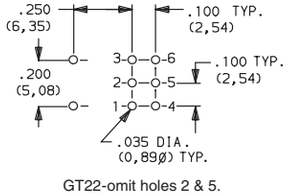

GT22-omit holes 2 & 5.

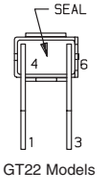

GT22 Models

PART NUMBER	SWITCH FUNCTION POS.1	POS. 2	POS. 3
GT21MABE	ON	NONE	ON
GT23MABE	ON	OFF	ON
Conn. Terms.	2-3, 5-6	OPEN	2-1, 5-4
Schematic DPDT	2 (COMM) 5; 1 3; 4 6		
GT22MABE	OFF	NONE	ON
Conn. Terms.	OPEN	N/A	3-1, 6-4
Schematic DPST	3 6; 1 4		

GT21MABE
Horizontal
Actuation
DPDT

Third Angle Projection

Dimensions are shown: Inches (mm)
Specifications and dimensions subject to change

GT11MAVBE
Vertical
Actuation
SPDT

PART NUMBER	SWITCH FUNCTION POS.1	POS. 2	POS. 3
GT11MAVBE	ON	NONE	ON
GT13MAVBE	ON	OFF	ON
Conn. Terms.	2-3	OPEN	2-1
Schematic SPDT	2 (COMM), 1, 3		
GT12MAVBE	OFF	NONE	ON
Conn. Terms.	OPEN	N/A	3-1
Schematic SPST	1, 3		

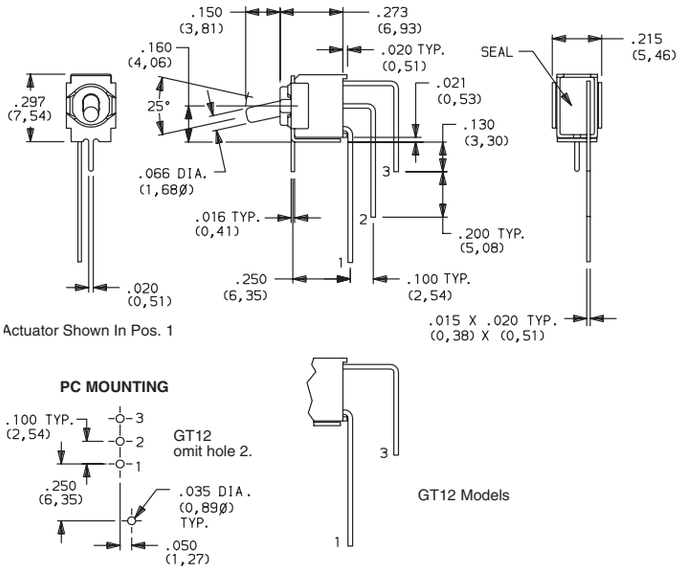

GT21MAVBE
Vertical
Actuation
DPDT

PART NUMBER	SWITCH FUNCTION POS.1	POS. 2	POS. 3
GT21MAVBE	ON	NONE	ON
GT23MAVBE	ON	OFF	ON
Conn. Terms.	2-3, 5-6	OPEN	2-1, 5-4
Schematic DPDT	2 (COMM), 5, 1, 3, 4, 6		
GT22MAVBE	OFF	NONE	ON
Conn. Terms.	OPEN	N/A	3-1, 6-4
Schematic DPST	3, 6, 1, 4		

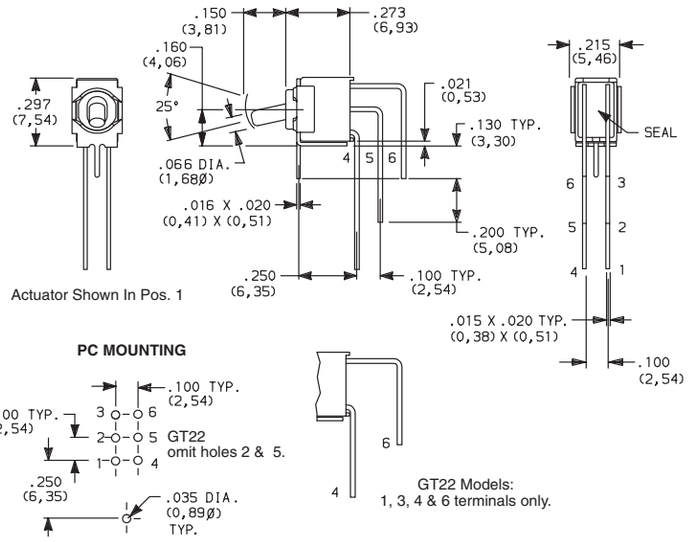

GT11MV3BE
SPDT

PART NUMBER	SWITCH FUNCTION POS.1	POS. 2	POS. 3
GT11MV3BE	ON	NONE	ON
GT13MV3BE	ON	OFF	ON
Conn. Terms.	2-3	OPEN	2-1
Schematic SPDT	2 (COMM), 1, 3	Note: Pins 4 and 6 not connected	
GT12MV3BE	OFF	NONE	ON
Conn. Terms.	OPEN	N/A	3-1
Schematic SPST	1, 3	Note: Pins 4 and 6 not connected	

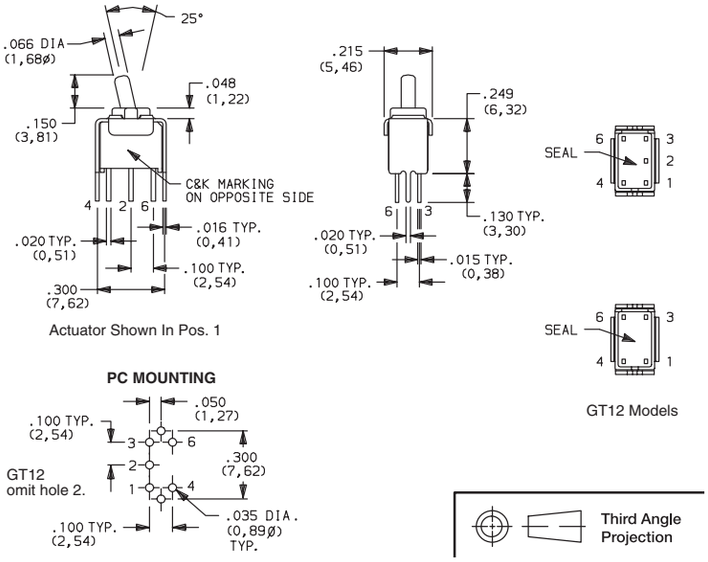

Third Angle Projection

Dimensions are shown: Inches (mm)
Specifications and dimensions subject to change

GT Series
Sealed Ultraminiature Toggle Switches

GT21MV3BE
DPDT

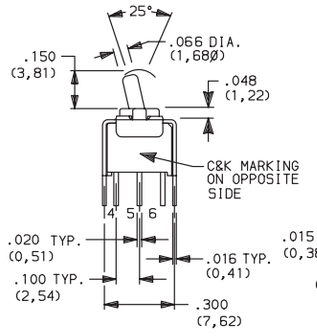

Actuator Shown
In Pos. 1

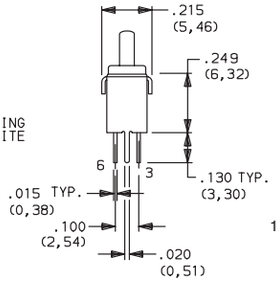

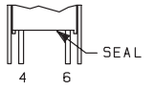

GT22 Models:
1, 3, 4 & 6 terminals only.

PC MOUNTING

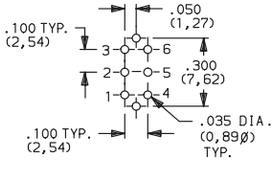

PART NUMBER	SWITCH FUNCTION POS.1	POS. 2	POS. 3
GT21MV3BE	ON	NONE	ON
GT23MV3BE	ON	OFF	ON
Conn. Terms.	2-3, 5-6	OPEN	2-1, 5-4
Schematic DPDT	2 (COMM) 5; 1 3; 4 6		
GT22MV3BE	OFF	NONE	ON
Conn. Terms.	OPEN	N/A	3-1, 6-4
Schematic DPST	3 6; 1 4		

GT11MSABE
Horizontal
Actuation
SPDT

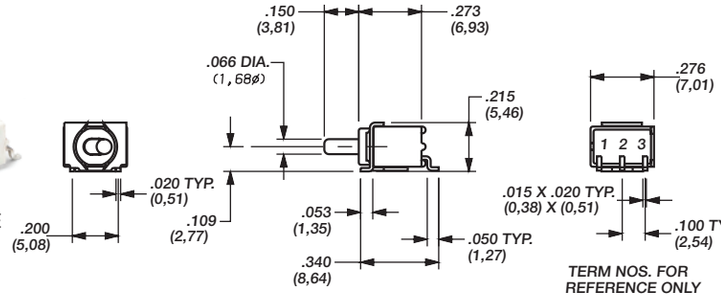

ACTUATOR SHOWN IN POS.1

TERM NOS. FOR REFERENCE ONLY

PC MOUNTING

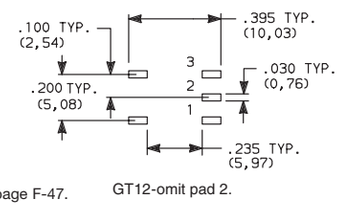

GT12 MODEL TERMS. 1 & 3 ONLY

Standard with tape & reel packaging, see page F-47.

GT12-omit pad 2.

PART NUMBER	SWITCH FUNCTION POS.1	POS. 2	POS. 3
GT11MSABETR	ON	NONE	ON
GT13MSABETR	ON	OFF	ON
Conn. Terms.	2-3	OPEN	2-1
Schematic SPDT	2 (COMM); 1 3		
GT12MSABETR	OFF	NONE	ON
Conn. Terms.	OPEN	N/A	3-1
Schematic SPST	1 3		

GT11MSCBE
SPDT

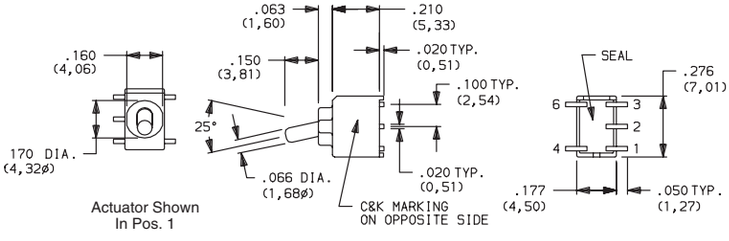

Actuator Shown
In Pos. 1

PC MOUNTING

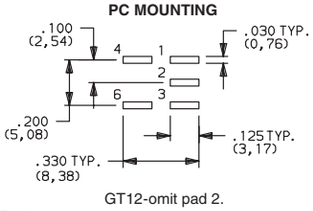

GT12-omit pad 2.

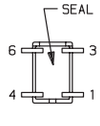

GT12 Models

PART NUMBER	SWITCH FUNCTION POS.1	POS. 2	POS. 3
GT11MSCBETR	ON	NONE	ON
GT13MSCBETR	ON	OFF	ON
Conn. Terms.	2-3	OPEN	2-1
Schematic SPDT	2 (COMM); 1 3	Note: Pins 4 and 6 not connected	
GT12MSCBETR	OFF	NONE	ON
Conn. Terms.	OPEN	N/A	3-1
Schematic SPST	1 3	Note: Pins 4 and 6 not connected	

Standard with tape & reel packaging, see page F-47.

Third Angle
Projection

Dimensions are shown: Inches (mm)
Specifications and dimensions subject to change

GT21MSCBE
DPDT

PART NUMBER	SWITCH FUNCTION POS.1	POS. 2	POS. 3
GT21MSCBETR	ON	NONE	ON
GT23MSCBETR	ON	OFF	ON
Conn. Terms.	2-3, 5-6	OPEN	2-1, 5-4
Schematic DPDT	1 ● ●3 ●2 (COMM) 4 ● ●5 ● 6		
GT22MSCBETR	OFF	NONE	ON
Conn. Terms.	OPEN	N/A	3-1, 6-4
Schematic DPST	1 ● 3 ● ● 4 ● 6		

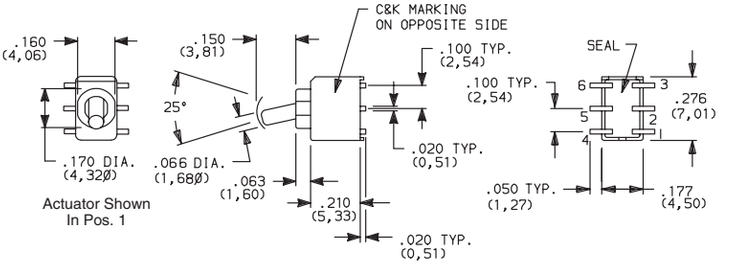

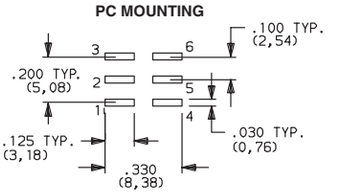

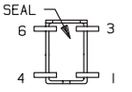

GT22 Models

GT22-omit pads 2 & 5.

Standard with tape & reel packaging

TAPE & REEL

For part numbers GT11MSABE, GT12MSABE, GT13MSABE

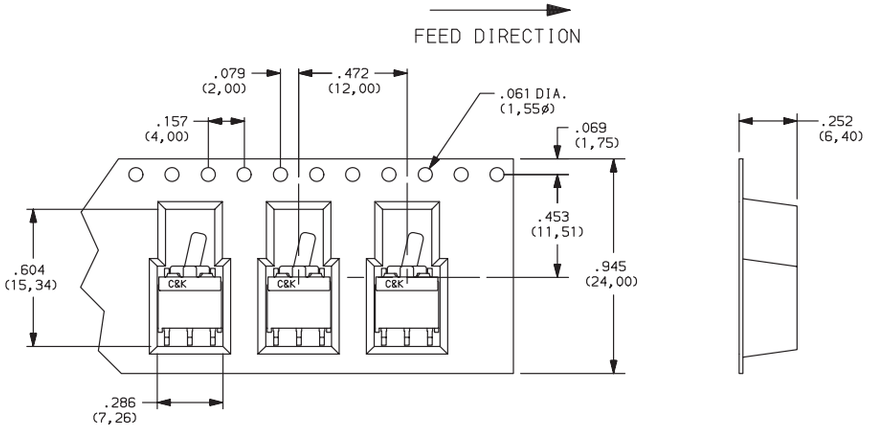

REEL INFORMATION	
OUTSIDE DIAMETER	13.00 (330,0)
PILOT HOLE	.512 (13,0)
QUANTITY PER REEL	600

For part numbers GT11MSCBE, GT12MSCBE, GT13MSCBE, GT21MSCBE, GT22MSCBE, GT23MSCBE,

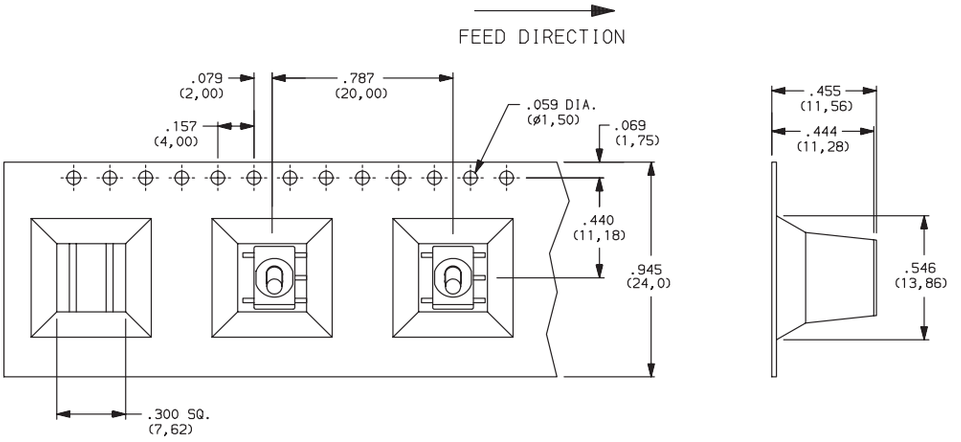

REEL INFORMATION	
OUTSIDE DIAMETER	13.00 (330,0)
PILOT HOLE	.512 (13,0)
QUANTITY PER REEL	200

Third Angle Projection

Dimensions are shown: Inches (mm)
Specifications and dimensions subject to change

9000 Series
Power Toggle Switches

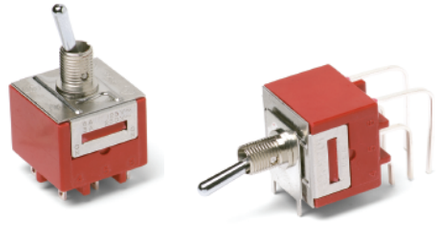

Features/Benefits

- ***Power ratings up to 10 AMPS***
- ***Double pole models***
- ***Locking lever options available***
- ***Wide variety of actuator styles***
- ***RoHS compliant and compatible***

Typical Applications

- ***Shut-off switch***
- ***Small equipment***

UL 61058-1

Specifications

CONTACT RATING:

9201 Model

GP (general purpose)
6 AMPS 125 VAC 50/60 Hz T85 10,000 cycles (10E3)
3 AMPS 250 VAC 50/60 Hz T85 10,000 cycles
R (resistive)
6 AMPS 30 VDC T85 10,000 cycles

9221 Model:

GP (general purpose)
10 AMPS 125 VAC 50/60 Hz T85 10,000 cycles
5 AMPS 250 VAC 50/60 Hz T85 10,000 cycles
R (resistive)
10 AMPS 30 VDC T85 10,000 cycles

ELECTRICAL LIFE: 25,000 make-and-break cycles at full load.

CONTACT RESISTANCE: Below 10 m Ω typ. initial @ 2-4 V DC, 100 mA.

INSULATION RESISTANCE: 10^9 Ω min.

DIELECTRIC STRENGTH: 2,500 Vrms min. @ sea level.

OPERATING TEMPERATURE: –30°C to 85°C.

SOLDERABILITY: Per MIL-STD-202F method 208D, or EIA RS-186E method 9 (1 hour steam aging).

Materials

CASE: Diallyl phthalate (DAP) (UL 94V-0).

ACTUATOR: Brass, chrome plated.

BUSHING: Brass or zinc, nickel plated.

HOUSING: Stainless steel.

SWITCH SUPPORT: Brass or steel, matte-tin plated.

END CONTACTS: 9201 Model: Coin silver, silver plated.
9221 Model: Silver cadmium oxide.

CENTER CONTACTS: Copper alloy, silver plated

ALL TERMINALS: 9201 Model: Copper alloy, silver plated.
9221 Model: Copper alloy, matte-tin plated.

TERMINAL SEAL: Epoxy.

HARDWARE: Nut & Locking ring: Brass, nickel plated.
Lockwasher: Steel, nickel plated.

NOTE: Any models supplied with Q contact material are RoHS compliant and compatible.

NOTE: Specifications and materials listed above are for switches with standard options. For information on specific and custom switches, consult Customer Service Center.

Build-A-Switch

To order, simply select desired option from each category and place in the appropriate box. Available options are shown and described on pages F-49 thru F-52. For additional options not shown in catalog, consult Customer Service Center.

Switch Function
9201 DPDT, On-On, 6 Amps
9221 DPDT, On-On, 10 Amps

Actuator
S Antirotation, .410" high
K Locking lever, .650" high
K1 Locking lever, .680" high
L43 Lever handle with cap
P3 Flatted, anti-rotation, .450" high
T .687" high, 15/32 bushing
T1 .460" high, 15/32 bushing

Bushing
H3 .296" high, keyway
CW Splashproof
H .296" high, flat

Terminations
Z Solder lug
Z4 Quick connect (9221 only)
AV2 Vert. right angle, PC thru-hole (9201 only)
C PC Thru-hole

Contact Material
Q Silver

Seal
E Epoxy
D No epoxy

Actuator Color/Finish
NONE Bright chrome
2 Black

Bushing Finish
NONE Nickel
2 Black

KXX Actuator Color/Finish
NONE Natural aluminum
2 Black anodized aluminum

Dimensions are shown: Inches (mm)
Specifications and dimensions subject to change

SWITCH FUNCTION

NO. POLES	MODEL NO.	RATING*	SWITCH FUNCTION POS. 1 (KEYWAY)	SWITCH FUNCTION POS. 2 (KEYWAY)	CONNECTED TERMINALS POS. 1 (KEYWAY)	CONNECTED TERMINALS POS. 2 (KEYWAY)	SCHEMATIC
DP	9201	6 AMPS	ON	ON	2-3,5-6	2-1,5-4	DPDT
	9221	10 AMPS	ON	ON			

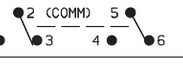

DPDT

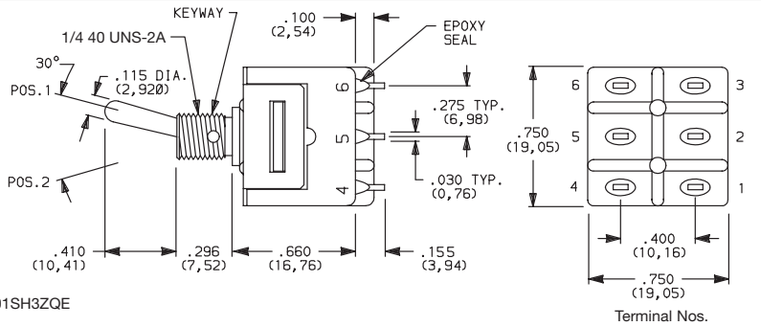

Part number shown: 9201SH3ZQE

* See CONTACT MATERIAL, page F-52, for complete ratings.

All 9000 Series models meet international dimensional and electrical requirements.

9221 model must be ordered with Z4 terminations and D seal option.

ACTUATOR

ACTUATOR FINISH

ACTUATOR

S ANTIROTATION, .410" HIGH

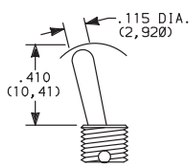

P3 FLATTED, ANTIROTATION, .450" HIGH

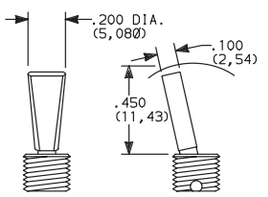

OPTION CODE	ACTUATOR FINISH
NONE	NATURAL ALUMINUM—With Nickel Plated Bushing
2	BLACK

NOTE: Black hardware is supplied when either black actuators or bushings are specified. All hardware is available separately, see Section N.

Antirotation is standard on all actuators, provides 'anti-push-in' feature on actuator.

Dress nut part number: 709901201 supplied standard with P3 actuator.

T .687" HIGH, 15/32 BUSHING

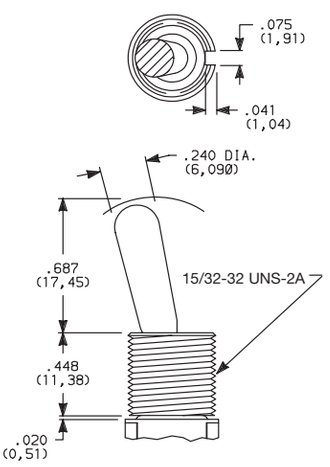

T1 .460" HIGH, 15/32 BUSHING

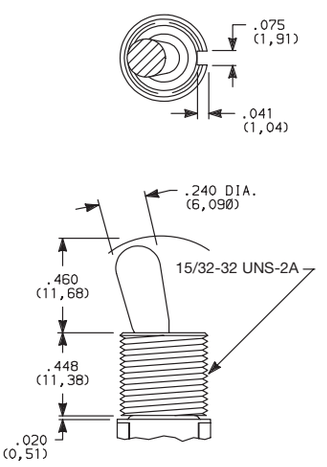

OPTION CODE	ACTUATOR FINISH
NONE	BRIGHT CHROME—With Nickel Plated Bushing
2	BLACK

NOTE: Bushing option code not required for T & T1 actuators unless CW splashproof bushing ordered.

Black hardware is supplied when either black actuators or bushings are specified. All hardware is available separately, see Section N.

Antirotation is standard on all actuators except T & T1, provides 'anti-push-in' feature on actuator.

Third Angle Projection

Dimensions are shown: Inches (mm)
Specifications and dimensions subject to change

9000 Series
Power Toggle Switches

ACTUATOR

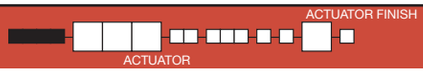

K LOCKING LEVER, .650" HIGH, THREADED

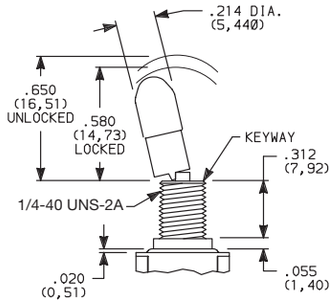

K1 LOCKING LEVER, .680" HIGH, THREADED

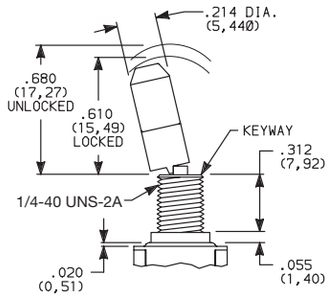

Locking Positions

2 Position Lock

NOTE: To prevent accidental actuation, toggles must be lifted before being actuated. When released, toggles again lock in place. Bushing option code not required. Overtightening mounting nut may cause actuator to bind.

OPTION CODE	ACTUATOR CAP FINISH
NONE	NATURAL ALUMINUM–With Nickle Plated Bushing
2	BLACK ANODIZED ALUMINUM

L40 LEVER HANDLE WITHOUT CAP

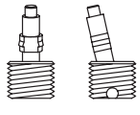

No color choice required.

L43 PLASTIC LEVER HANDLE WITH ANTIROTATION AND CAP, P/N 4812

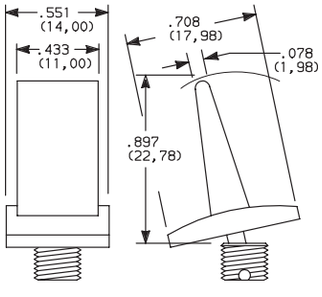

OPTION CODE	ACTUATOR CAP COLOR
2	BLACK
NONE	No Actuator Color (L40 option)

Other colors available, consult Customer Service Center.

Finish: Matte

NOTE: Lever handle actuator L43 supplied, but not installed. For interchangeability, order L40 actuator option and order lever handles separately, see page F-52. Antirotation is standard on all actuators, provides 'anti-push-in' feature.

BUSHING

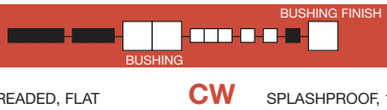

H3 .296" HIGH, THREADED, KEYWAY

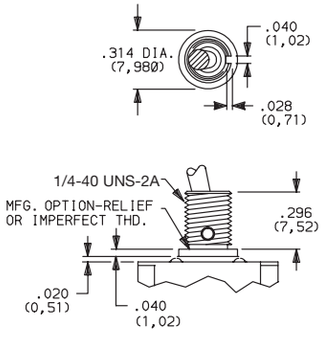

Will withstand 12 in./lbs. of torque with no distortion.

H .296" HIGH, THREADED, FLAT

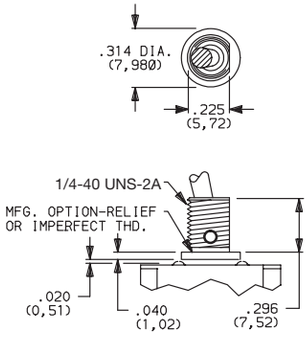

CW SPLASHPROOF, 15/32 BUSHING

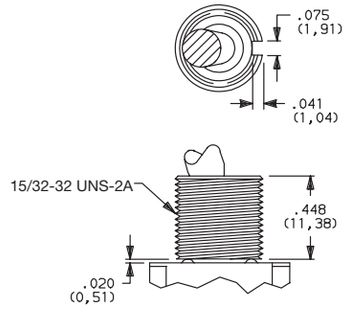

For T & T1 actuators only.

OPTION CODE	BUSHING FINISH
NONE	NICKEL
2	BLACK

NOTE: Two mounting nuts, locking ring and lockwasher supplied standard with threaded bushings. Black hardware is supplied when either black bushings or actuators are specified. Optional mounting nut and locking ring styles and finishes available, see Section N.

Internal actuator seal standard. External bushing seal available separately from APM Hexseal, part # MFS-60064.

Third Angle Projection

Dimensions are shown: Inches (mm)
Specifications and dimensions subject to change

BUSHING

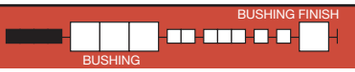

PANEL MOUNTING

1/4-40 UNS-2A

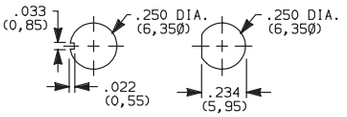

Without locking ring.

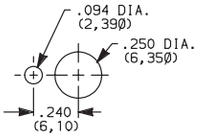

With standard locking ring.

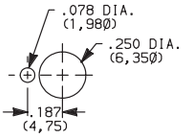

With small locking ring.

15/32-32 UNS-2A

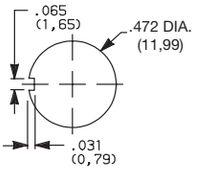

Without locking ring.

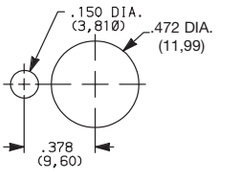

With standard locking ring.

TERMINATIONS

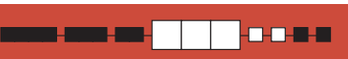

Z SOLDER LUG

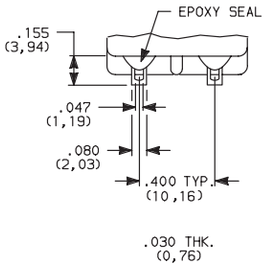

9201 Only

C PC THRU-HOLE

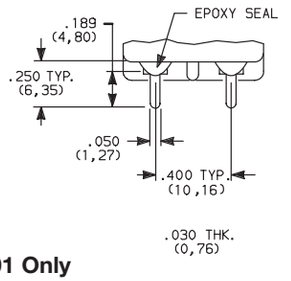

PC MOUNTING

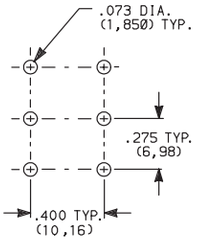

9201 Only

Z4 .187" QUICK CONNECT

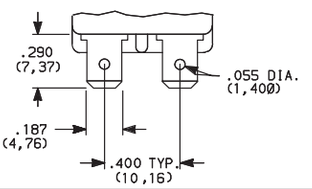

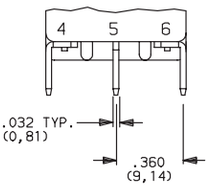

9221 Only

NOTE: Only termination available with 9221 model. Must be ordered with D seal option. Mates with standard .187 Nema female connector.

AV2 VERTICAL RIGHT ANGLE, PC THRU-HOLE

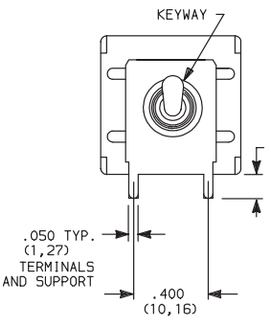

Actuator Shown in Pos. 3

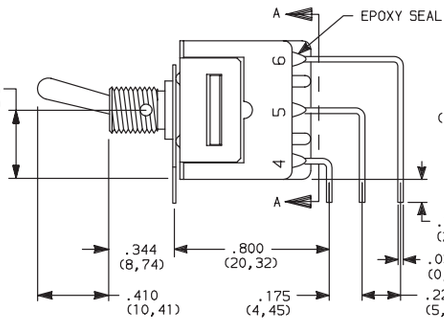

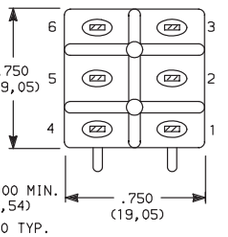

SECTION A-A

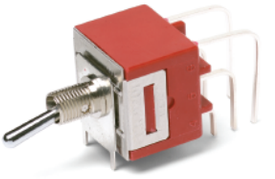

9201SH3AV2QE
Vertical Actuation
DPDT

PC MOUNTING

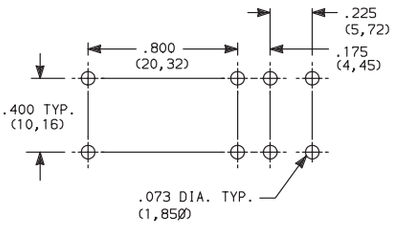

Terminal Nos.
For Reference Only

9201 Only

NOTE: Terminal bend radii and lead-in manufacturing option. Terminal spacing greater than 3mm at all points.

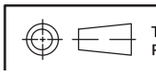

Third Angle Projection

Dimensions are shown: Inches (mm)
Specifications and dimensions subject to change

9000 Series
Power Toggle Switches

CONTACT MATERIAL

OPTION CODE	MODEL	CONTACT MATERIAL	TERMINAL PLATING	RATINGS
Q	9201	SILVER [1,2]	SILVER OR TIN [2,5]	GP (general purpose) 6 AMPS 125 VAC 50/60 Hz T85 10,000 cycles (10E3) 3 AMPS 250 VAC 50/60 Hz T85 10,000 cycles R (resistive) 6 AMPS 30 VDC T85 10,000 cycles
	9221	SILVER CADMIUM OXIDE [3,4,6]	TIN [5]	GP (general purpose) 10 AMPS 125 VAC 50/60 Hz T85 10,000 cycles 5 AMPS 250 VAC 50/60 Hz T85 10,000 cycles R (resistive) 10 AMPS 30 VDC T85 10,000 cycles

* Note: See Technical Data section of this catalog for RoHS compliant and compatible definitions and specifications.

[1] END CONTACTS: Coin silver, silver plated.
[2] CENTER CONTACTS & ALL TERMINALS: Copper alloy, silver plated.
[3] END CONTACTS: Silver cadmium oxide.
[4] CENTER CONTACTS: Copper alloy, silver plated.
[5] Z4 TERMINALS ONLY: Copper alloy, matte-tin plated.
[6] Cadmium in electrical switch contacts is exempt from RoHS.

NOTE: Any models supplied with Q contact material are RoHS compliant.

All 9000 Series models meet international dimensional and electrical requirements.

9221 model must be ordered with Z4 terminations and D seal option.

SEAL

E EPOXY SEAL

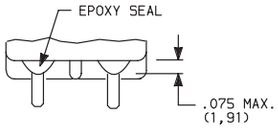

Not available with 9221 model or Z4 terminations.

D NO EPOXY SEAL

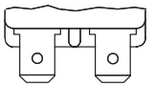

Must be ordered with 9221 model and Z4 termination.

AVAILABLE HARDWARE

Cap
Compatible with S actuator

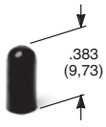

PART NO.

896801000	WHITE
896802000	BLACK
896803000	RED

Material: Polyethylene
Finish: Matte

Cap
Compatible with S actuator

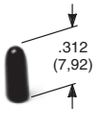

PART NO.

706201000	WHITE
706202000	BLACK
706203000	RED

Material: Vinyl
Finish: Matte

L43 Actuator

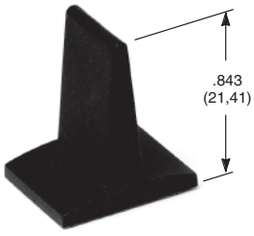

PART NO.

481202000	BLACK
481203000	RED

Material: Nylon
Finish: Matte

NOTE: Additional nuts, locking rings and lockwashers available separately, see Section N.

Other colors available, consult Customer Service Center.

759D02000 Sealing Boot

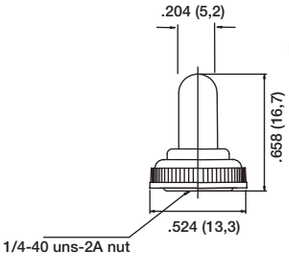

NOTE: For use with S actuator style when combined with H3 and H bushings

703D02000 Sealing Boot

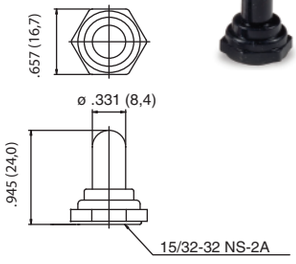

NOTE: For use with T style actuator

704D02000 Sealing Boot

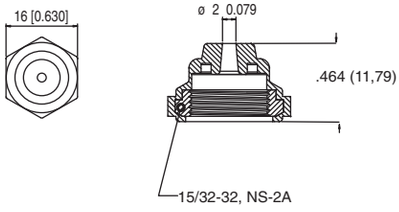

NOTE: For use with T style actuator

Third Angle Projection

Dimensions are shown: Inches (mm)
Specifications and dimensions subject to change

Rockers
Product Selection Guide

Rocker			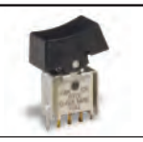			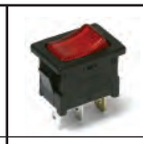	
Series	**7000**	**E**	**ET**	**T**	**9000**	**DA**	**D**
Switch Type	Miniature	Miniature	Subminiature	Subminiature	Power Rocker & Lever Handle	Miniature Power	Miniature Power
Poles/Throws	SPDT, DPDT, 3PDT, 4PDT	SPDT, DPDT, 3PDT	SPST, SPDT, DPDT	SPST, SPDT, DPDT	DPDT	SPST, SPDT	SPST, SPDT DPST, DPDT
Max. Current	5 Amps	7.5 Amps	3 Amps	3 Amps	10 Amps	16 Amps 10 Amps	4 Amps 10 Amps
Washable		•	•				
Illuminated						•	
Panel Mount Options							
Front Mount	•	•		•	•	Snap-in	Snap-in
Rear Mount	•	•		•	•		
PCB Mount Options							
Vertical	•	•	•	•	•	•	•
Right Angle	•	•	•	•	•	•	•
Surface Mount			•				
Page No.	G–3	G–25	G–39	G–45	G–51	G–56	G–60

Rocker					
Series	**DM**	**DM**	**DF**	**CR**	**SW**
Switch Type	Miniature 2 Pole Power	Miniature Illuminated Power	Power	Round	Miniature Power
Poles/Throws	DPST, DPDT	SPST, DPST	SPST, SPDT, DPST	SPST, SPDT	SPST, SPDT, DPST
Max. Current	3 Amps, 10 Amps	3 Amps, 10 Amps	16 Amps	10 Amps, 6 Amps	3 A, 6 A, 6.5 A, 10 A, 16 A
Washable					
Illuminated		•		•	•
Panel Mount Options					
Front Mount	Snap-in	Snap-in	Snap-in	Snap-in	Snap-in
Rear Mount			•		
PCB Mount Options					
Vertical					
Right Angle			•		
Surface Mount					
Page No.	G–65	G–69	G–73	G–77	G–81

Dimensions are shown: Inches (mm)
Specifications and dimensions subject to change

7000 Series
Miniature Rocker & Lever Handle Switches

Features/Benefits

- ***Multi-pole and multi-position***
- ***Wide variety of actuator and termination options***
- ***Epoxy terminal-seal compatible with bottom wash cleaning***
- ***RoHS compliant***

Typical Applications

- ***Telecommunications***
- ***Instrumentation***
- ***Medical equipment***

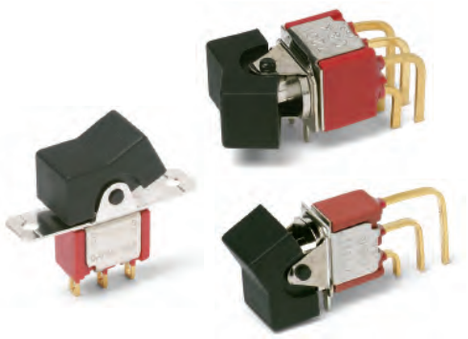

c UL us

Specifications

CONTACT RATING: B contact material: 0.4 VA max. @ 20 V AC or DC max. Q contact material: 5 AMPS @ 120 V AC or 28 V DC; 2 AMPS @ 250 V AC. See page G-20 for additional ratings.

ELECTRICAL LIFE: 7X01 and UX1 models: 100,000 make-and-break cycles at full load. All other models: 40,000 cycles.

CONTACT RESISTANCE: Below 10 m Ω typ. initial @ 2-4 V DC, 100 mA, for both silver and gold plated contacts.

INSULATION RESISTANCE: 10^9 Ω min.

DIELECTRIC STRENGTH: 1000 Vrms min. @ sea level.

OPERATING TEMPERATURE: –30ºC to 85ºC.

SOLDERABILITY: Per MIL-STD-202F method 208D, or EIA RS-186E method 9 (1 hour steam aging).

NOTE: Any models supplied with S, P, R, Q, B or G contact material are RoHS compliant.

NOTE: Specifications and materials listed above are for switches with standard options. For information on specific and custom switches, consult Customer Service Center.

Materials

CASE: Glass filled nylon 6/6, flame retardant, heat stabilized, or diallyl phthalate (DAP) (UL 94V-0).

ACTUATOR: Nylon, black.

FRAME (FRONT MOUNT): Nylon, black.

FRAME (REAR MOUNT): Spring steel, black.

BUSHING: Brass or zinc, nickel plated.

HOUSING: Stainless steel.

SWITCH SUPPORT: Brass or steel, matte-tin plated.

END CONTACTS: B contact material: Copper alloy, with gold plate over nickel plate. Q contact material: Coin silver, silver plated. See page G-20 for additional contact materials.

CENTER CONTACTS & ALL TERMINALS: B contact material: Copper alloy, with gold plate over nickel plate. Q contact material: Copper alloy, silver plated. See page G-20 for additional contact materials.

TERMINAL SEAL: Epoxy. Refer to Soldering and Cleaning in Technical Data Section

HARDWARE: Mounting nuts & screws: Brass. Lockwasher: Stainless steel. Standoff: Nylon standard.

Build-A-Switch

To order, simply select desired option from each category and place in the appropriate box. Available options are shown and described on pages G-4 through G-24 . For additional options not shown in catalog, consult Customer Service Center. All models have epoxy terminal seal and are compatible with all "bottom-wash" PCB cleaning methods.

Switch Function

7101 SP On-None-On
7103 SP On-Off-On
7105 SP Mom.-Off-Mom.
7107 SP On-Off-Mom.
7108 SP On-None-Mom.
7109 SP None-On-Mom.
7201 DP On-None-On
7203 DP On-Off-On
7205 DP Mom.-Off-Mom.
7207 DP On-Off-Mom.
7208 DP On-None-Mom.
7211 DP On-On-On
7213 DP On-On-Mom.
7215 DP Mom.-On-Mom.
7301 3P On-None-On
7303 3P On-Off-On
7401 4P On-None-On
7405 4P Mom.-Off-Mom.
7411 4P On-On-On

Note: UL models available, see pages G-5 and G-6.

Actuator

J1 .531 long rocker
J2 Lever
J3 .906" long rocker
J8 .699" long rocker
J10 1.318" long rocker
J11 Rocker with frame
J15 Rocker, snap-in
J16 Rocker with frame, snap-in
J19 Rocker with frame
J21 Lever with frame
J25 Lever, snap-in
J26 Lever with frame, snap-in
J37 Rocker with frame
J50 Rocker
J51 Rocker with frame
J52 Rocker with frame for LED, snap-in
J60 Lever
J61 Lever with frame, snap-in
J62 Lever with frame for LED, snap-in
J90 Lever
J91 Lever with frame, snap-in

Terminations

A Right angle, PC thru-hole
AV2 Vertical right angle, PC thru-hole
C PC Thru-hole
Z Solder lug
A3 Right angle, snap-in, PC thru-hole
AV3 Vertical right angle, snap-in, PC thru-hole
AW3 Right angle, extended, PC thru-hole
V2 .555" high, V-bracket
V3 .460" high, V-bracket
V4 .630" high, V-bracket
V5 Vertical right angle, PC thru-hole
V6 .460" high, V-bracket
V7 .630" high, V-bracket
V8 .953" high, V-bracket
V9 1.150" high, V-bracket
V31 .460" high, V-bracket, snap-in
V51 Vertical right angle, snap-in
V61 .460" high, V-bracket, snap-in
W .750" long, wire wrap
W3 .425" long, wire wrap
W5 1.305" long,wire wrap
Z3 Quick connect

Contact Material

B Gold
P Gold, matte tin
Q Silver
S Silver, matte-tin
G Gold over silver
R Gold over silver, matte-tin

Seal

E Epoxy
I Epoxy potted base

Actuator Color

2 Black
1 White
3 Red

Frame Color

2 Black
NONE No frame color required
1 White

Metal Frame Color
(J11, J19, J21 & J37 Actuators)

2 Black
1 White

Dimensions are shown: Inches (mm)
Specifications and dimensions subject to change

7000 Series
Miniature Rocker & Lever Handle Switches

SWITCH FUNCTION

NO. POLES	MODEL NO.	UL** MODEL NO.	SWITCH FUNCTION POS. 1	SWITCH FUNCTION POS. 2	SWITCH FUNCTION POS. 3	CONNECTED TERMINALS POS. 1	CONNECTED TERMINALS POS. 2	CONNECTED TERMINALS POS. 3	SCHEMATIC
			C&K marking on opposite side			C&K marking on opposite side			
SP	7101	U11	ON	NONE	ON	2-3	N/A	2-1	SPDT
	7103	U13	ON	OFF	ON		OPEN		
	7105	U15	MOM.	OFF	MOM.				
	7107	U17	ON	OFF	MOM.				
	7108	U18	ON	NONE	MOM.		N/A		
	7109	U19	NONE	ON	MOM.	N/A	2-3	2-1	
DP	7201	U21	ON	NONE	ON	2-3,5-6	N/A	2-1,5-4	DPDT
	7203	U23	ON	OFF	ON		OPEN		
	7205	U25	MOM.	OFF	MOM.				
	7207	U27	ON	OFF	MOM.				
	7208	U28	ON	NONE	MOM.		N/A		
	7211*	U211*	ON	ON	ON		2-3,5-4		
	7213*	U213*	ON	ON	MOM.				
	7215*	U215*	MOM.	ON	MOM.				

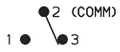

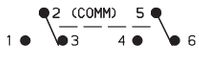

SPDT

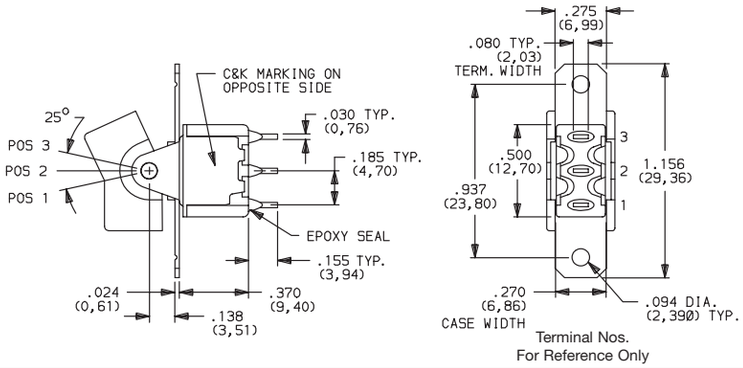

Terminal Nos.
For Reference Only

Part number shown: 7101J1ZQE2

DPDT

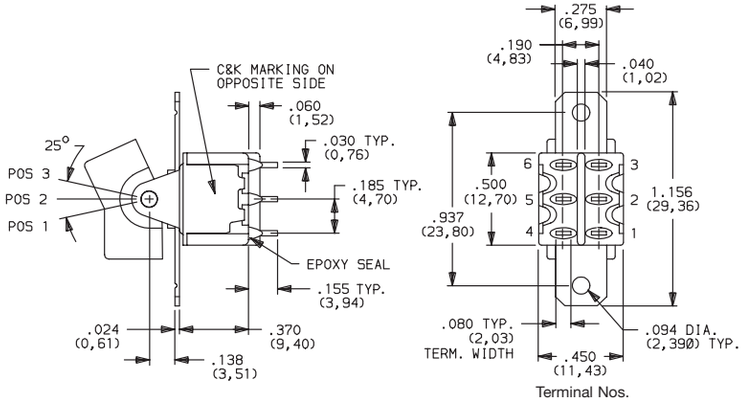

Terminal Nos.
For Reference Only

Part number shown: 7201J1ZQE2

MOM. = Momentary

* Wiring for 3-way switch, see Section N.

** U11 through U413 model nos. c UL us with all options when ordered with G, Q, R or S contact material.

Third Angle Projection

Dimensions are shown: Inches (mm)
Specifications and dimensions subject to change

SWITCH FUNCTION

NO. POLES	MODEL NO.	UL** MODEL NO.	SWITCH FUNCTION POS. 1	SWITCH FUNCTION POS. 2	SWITCH FUNCTION POS. 3	CONNECTED TERMINALS POS. 1	CONNECTED TERMINALS POS. 2	CONNECTED TERMINALS POS. 3	SCHEMATIC
			C&K marking on opposite side			C&K marking on opposite side			
3P	7301	U31	ON	NONE	ON	2-3,5-6,8-9	N/A	2-1,5-4,8-7	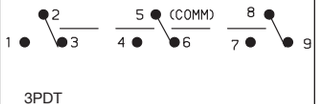
	7303	U33	ON	OFF	ON		OPEN		3PDT

3PDT

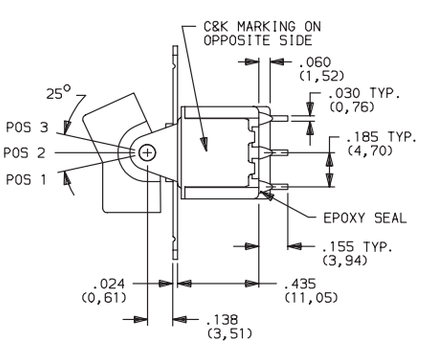

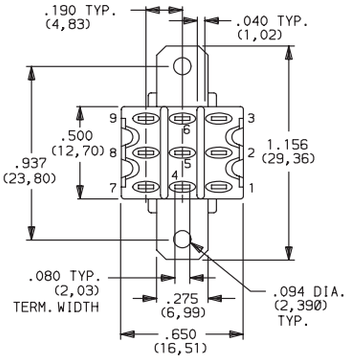

Terminal Nos.
For Reference Only

Part number shown: 7301J1ZQE2

4P	7401	U41	ON	NONE	ON	2-3,5-6,8-9,11-12	N/A	2-1,5-4,8-7,11-10	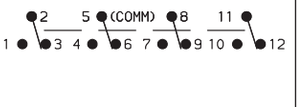
	7405	U45	MOM.	OFF	MOM.		OPEN		
	7411*	U411*	ON	ON	ON		2-3,5-4,8-9,11-10		4PDT

4PDT

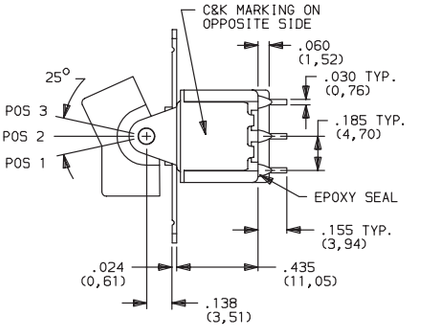

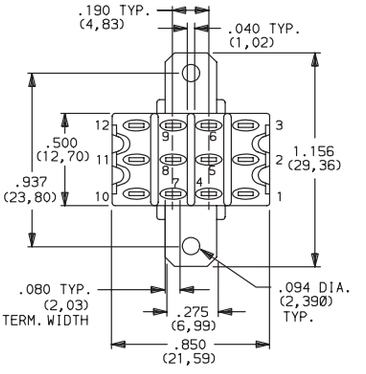

Terminal Nos.
For Reference Only

Part number shown: 7401J1ZQE2

MOM. = Momentary

** U11 through U411 model nos. c UL us with all options when ordered with G, Q, R or S contact material.

* Wiring for 3-way switch: See Technical Data section of this catalog for RoHS compliant and compatible definitions and specifications.

Third Angle Projection

Dimensions are shown: Inches (mm)
Specifications and dimensions subject to change

7000 Series
Miniature Rocker & Lever Handle Switches

ACTUATOR–PANEL REAR MOUNT

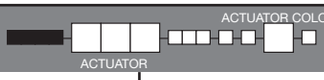

J1 ROCKER

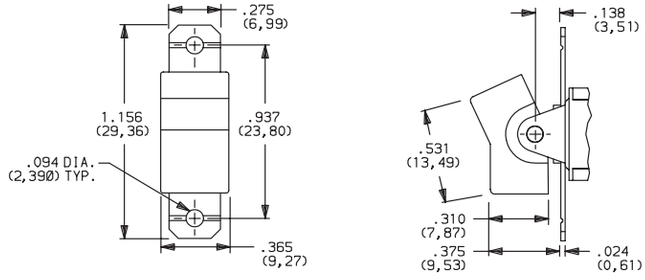

J2 LEVER

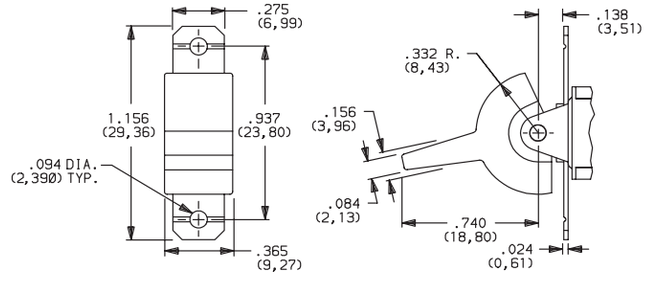

J3 ROCKER

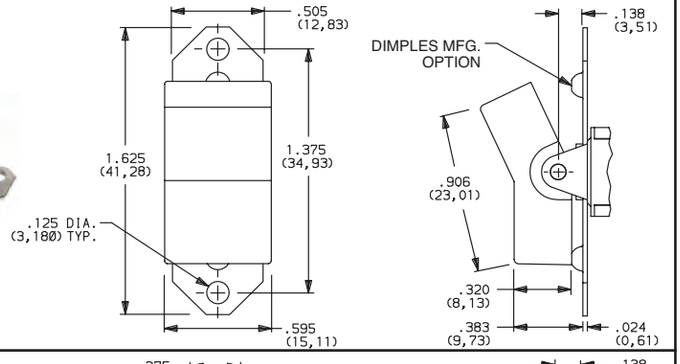

J8 ROCKER

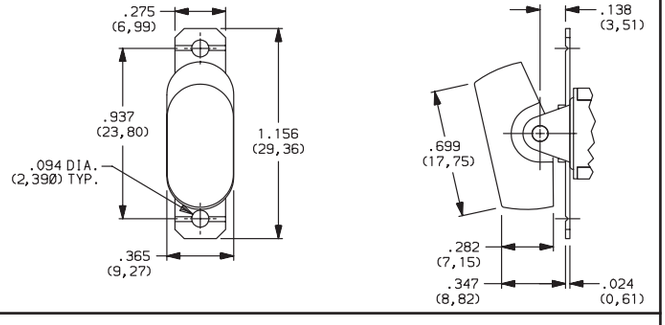

J10 ROCKER

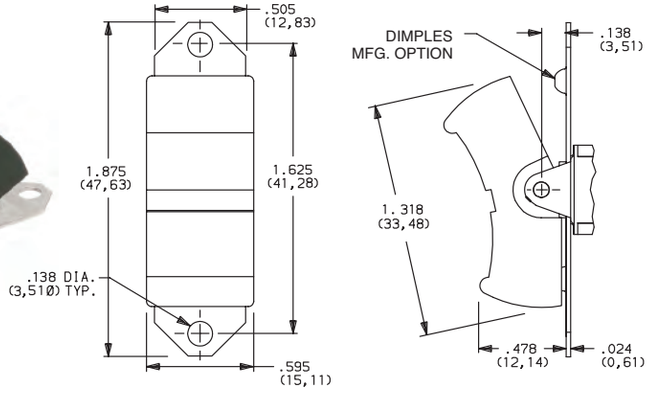

OPTION CODE	ACTUATOR COLOR
2	BLACK
1	WHITE
3	RED

Finish: Matte. Other colors, custom actuator markings and legends available, consult Customer Service Center.

NOTE: Hardware: two each—mounting screws, nuts, lockwashers and standoffs for 1/8 inch thick panel are supplied standard on all switches with panel mounting brackets. Actuators available separately, see page G-21 through G-22. Hardware is available see Technical Data section of this catalog.

J1, J2, J3, J8 & J10 Actuators available with C, W-W5, Z or Z3 terminations.

PANEL MOUNTING

J1 & J2 Actuators

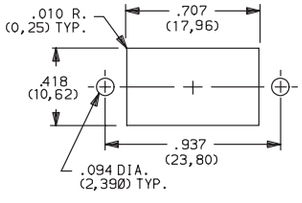

J3 Actuator

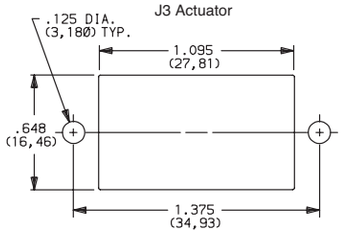

J8 Actuator

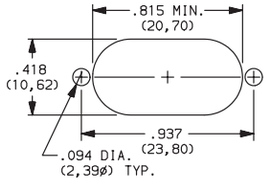

J10 Actuator

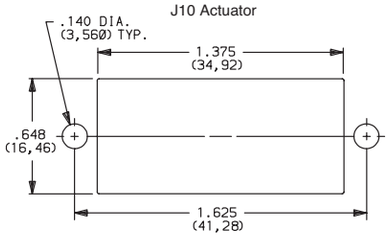

Third Angle Projection

Dimensions are shown: Inches (mm)
Specifications and dimensions subject to change

ACTUATOR–SNAP-IN FRONT MOUNT

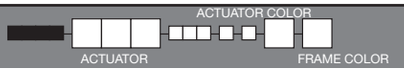

OPTION CODE	ACTUATOR COLOR
2	BLACK
1	WHITE
3	RED

OPTION CODE	FRAME COLOR
2	BLACK
NONE	No Frame Color (J15 or J25options)
1	WHITE

Finish: Matte. Other colors, custom actuator markings and legends available, consult Customer Service Center.

NOTE: Actuators & frames available separately, see pages G-21 through G-22. J15, J16, J25, J26, J50 & J51 Actuators available with 71XX, 72XX, U1XX & U2XX models and C, W-W5, Z and Z3 terminations.

PANEL MOUNTING

J15, J16, J25 & J26 Actuators

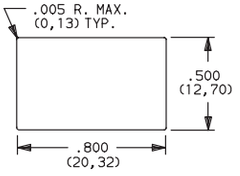

J50 Actuator

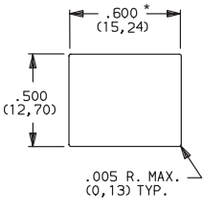

* For J50: Increase this dimension to .620/.625 (15,75/15,88) for .091/.125 (2,31/3,18) thk. panels.

J15 ROCKER, SNAP-IN

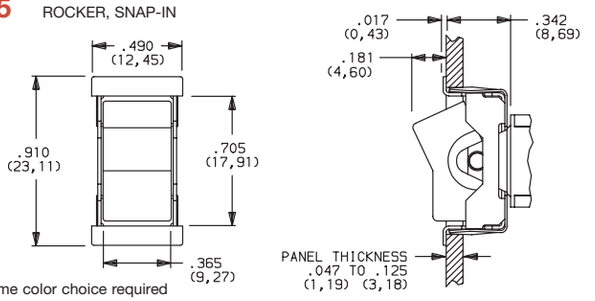

No frame color choice required

J16 ROCKER WITH FRAME, SNAP-IN

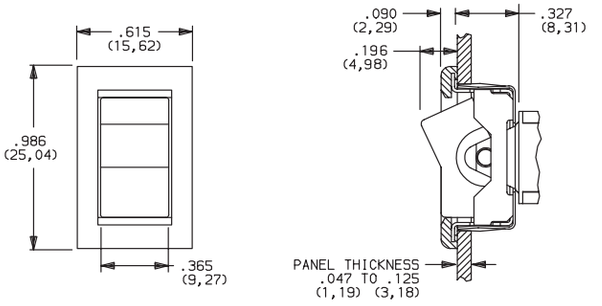

J25 LEVER, SNAP-IN

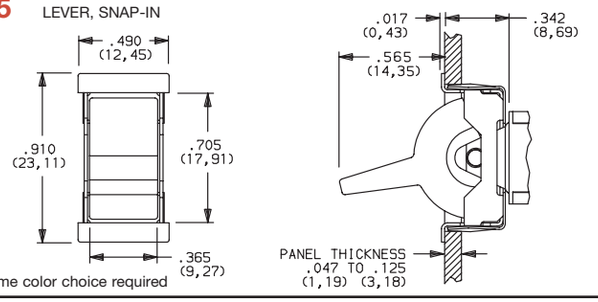

No frame color choice required

J26 LEVER WITH FRAME, SNAP-IN

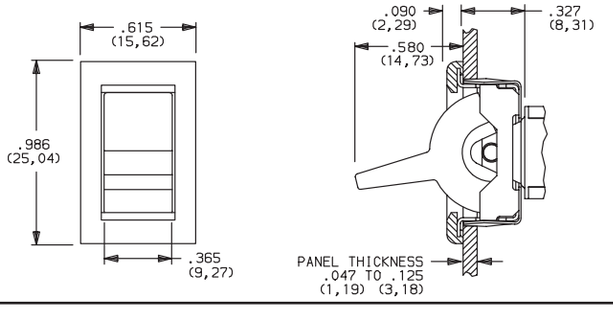

J50 ROCKER, SNAP-IN

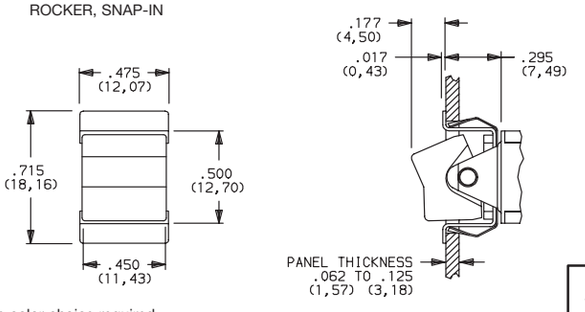

No frame color choice required

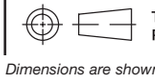

Third Angle Projection

Dimensions are shown: Inches (mm)
Specifications and dimensions subject to change

7000 Series
Miniature Rocker & Lever Handle Switches

ACTUATOR–SNAP-IN FRONT MOUNT

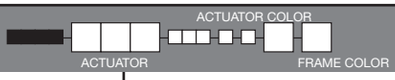

J51 ROCKER WITH FRAME, SNAP-IN

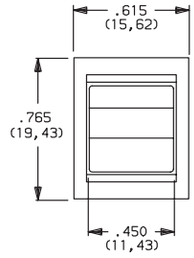

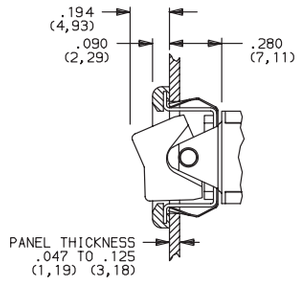

OPTION CODE	ACTUATOR COLOR
2	BLACK
1	WHITE
3	RED

J52 ROCKER WITH FRAME FOR LED, SNAP-IN

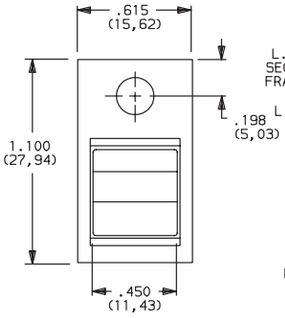

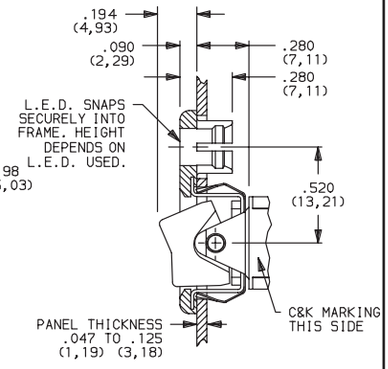

LED not included.
For LED information, see page G-24.

OPTION CODE	FRAME COLOR
2	BLACK
NONE	No Frame Color (J15 or J25 options)
1	WHITE

Finish: Matte. Other colors, custom actuator markings and legends available, consult Customer Service Center.

NOTE: Actuators & frames available separately, see pages G-21 through G-22. J51, J52, J60 & J61 Actuators available with 71XX, 72XX, U1XX & U2XX models and C, W-W5, Z and Z3 terminations.

J60 LEVER, SNAP-IN

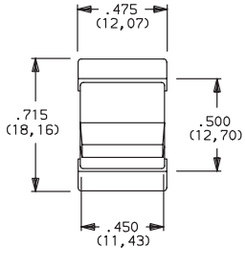

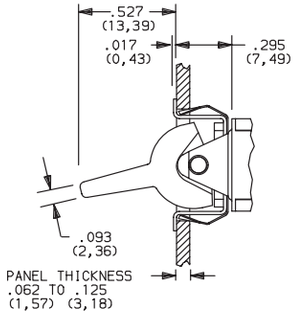

No frame color choice required

PANEL MOUNTING

J51, J60 & J61 Actuators

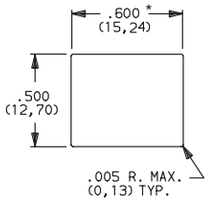

J52 Actuator

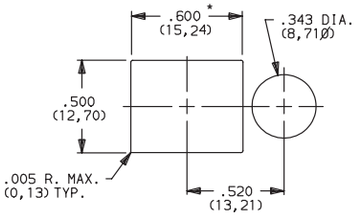

For J51, J52: Increase this dimension to .620/.625 (15,75/15,88) for .060/.125(1,52/3,18) thk. panels.

J61 LEVER WITH FRAME, SNAP-IN

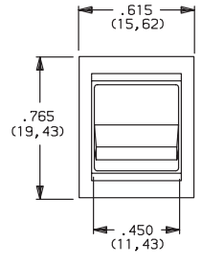

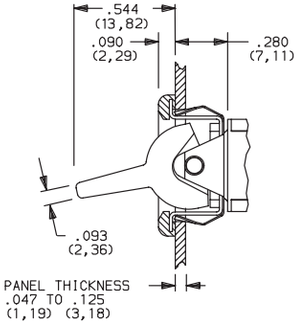

Third Angle Projection

Dimensions are shown: Inches (mm)
Specifications and dimensions subject to change

ACTUATOR–SNAP-IN FRONT MOUNT

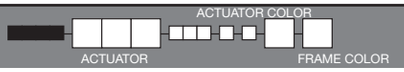

OPTION CODE	ACTUATOR COLOR
2	BLACK
1	WHITE
3	RED

OPTION CODE	FRAME COLOR
2	BLACK
NONE	No Frame Color (J90 options)
1	WHITE

Finish: Matte. Other colors, custom actuator markings and legends available, consult Customer Service Center.

NOTE: Actuators & frames available separately, see pages G-21 through G-22. J62, J90 & J91 Actuators available with 71XX, 72XX, U1XX & U2XX models and C, W-W5, Z & Z3 terminations.

J62 LEVER WITH FRAME FOR LED, SNAP-IN

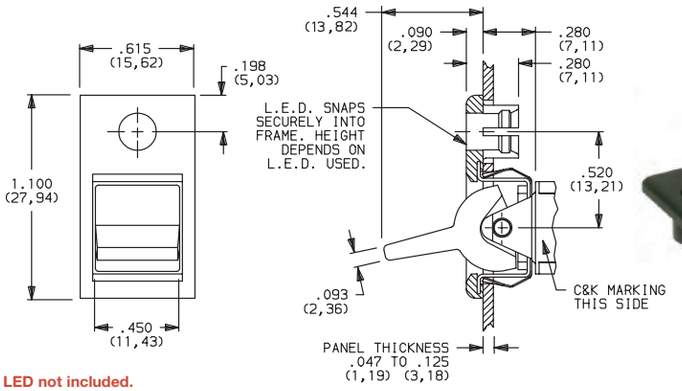

LED not included.
For LED information, see page H-25.

J90 LEVER, SNAP-IN

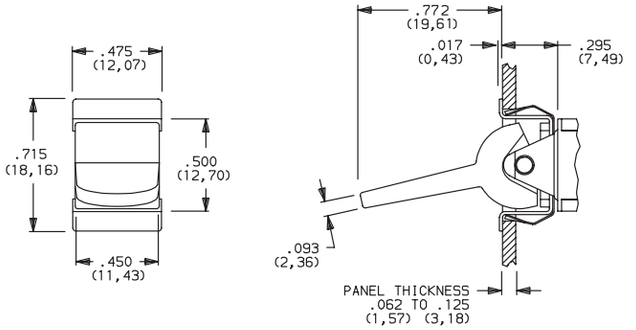

No frame color choice required.

J91 LEVER WITH FRAME, SNAP-IN

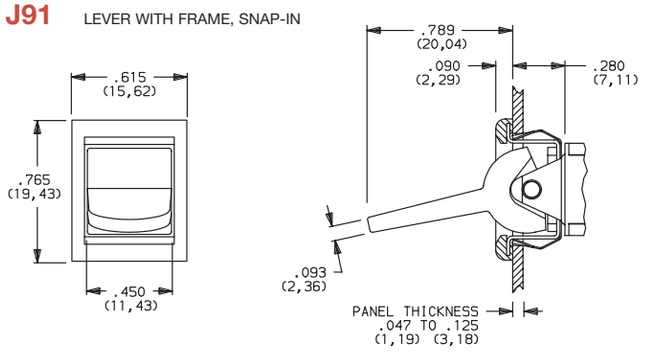

PANEL MOUNTING

J62 Actuator

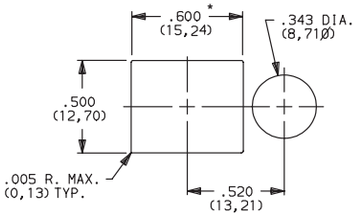

J90, J91 & J93 Actuators

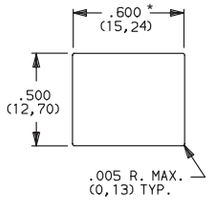

* For J90: Increase this dimension to .620/.625 (15,75/15,88) for .091/.125 (2,31/3,18) thk. panels. For J91: Increase this dimension to .620/.625 (15,75/15,88) for .060/.125 (1,52/3,18) thk. panels.

Third Angle Projection

Dimensions are shown: Inches (mm)
Specifications and dimensions subject to change

7000 Series
Miniature Rocker & Lever Handle Switches

ACTUATOR–REAR MOUNT

ACTUATOR FRAME COLOR

J11 ROCKER WITH FRAME

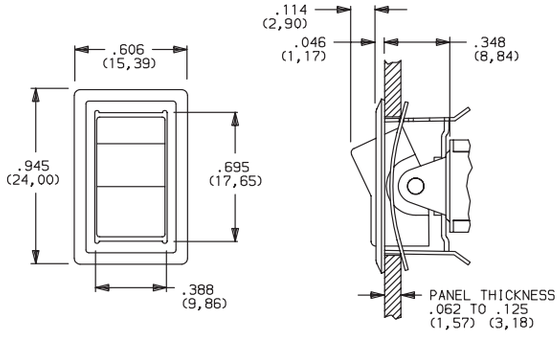

J19 ROCKER WITH FRAME

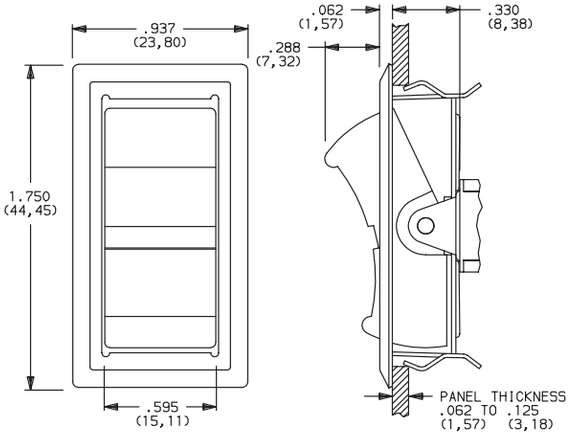

J21 LEVER WITH FRAME

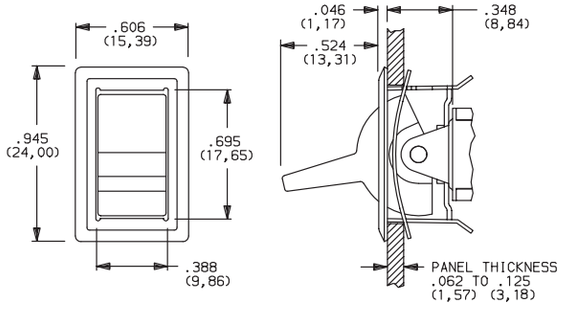

J37 ROCKER WITH FRAME

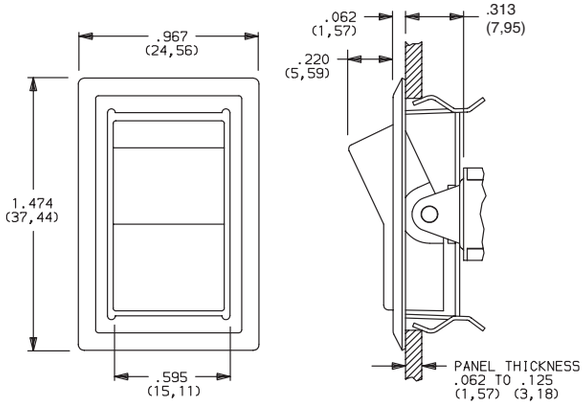

OPTION CODE	ACTUATOR COLOR
2	BLACK
1	WHITE
3	RED

OPTION CODE	FRAME COLOR
2	BLACK
1	WHITE

Actuator finish: Matte. Frame finish: Gloss. Other colors, custom actuator markings and legends available, consult Customer Service Center.

NOTE: Actuators & frames available separately, see pages G-21 through G-22. J11, J19, J21 & J37 Actuators available with C, W-W5, Z & Z3 terminations.

PANEL MOUNTING

J11 & J21 Actuators

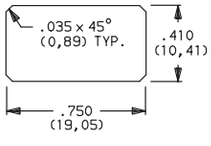

J19 Actuator

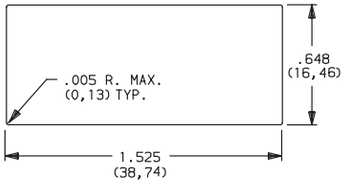

J37 Actuator

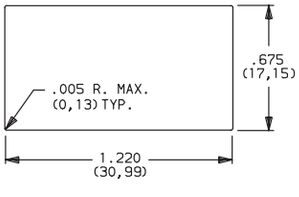

Third Angle Projection

Dimensions are shown: Inches (mm)
Specifications and dimensions subject to change

ACTUATOR–PC MOUNT

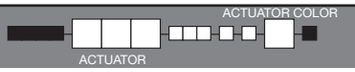

OPTION CODE	ACTUATOR COLOR
2	BLACK
1	WHITE
3	RED

Finish: Matte. Other colors, custom actuator markings and legends available, consult Customer Service Center.

NOTE: Some permissible actuator/termination combinations may lack clearance between actuator and PC board, and care must be exercised to accommodate this condition.

Actuators available separately, see page G-21 through G-22. J1, J2 & J8 actuators available with A, A3, AV2, AV3, AW3 & V2 terminations. J3 actuators available with AV2, AV3 & V2-V61 terminations. J50 actuators available with A (DP, 3P models only), A3 (DP, 3P models only), AV2, AV3, AW3 (DP, 3P models only) & V2-V61 terminations.

J1 ROCKER

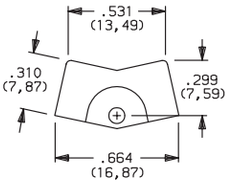

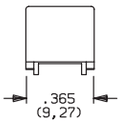

J2 LEVER

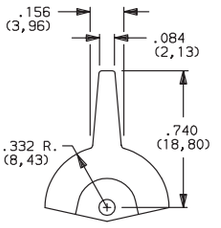

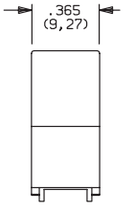

J3 ROCKER

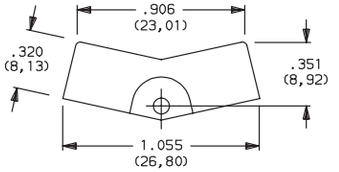

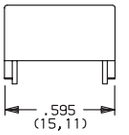

J8 ROCKER

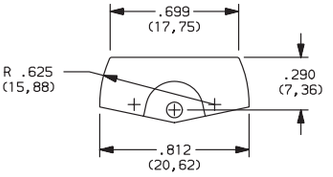

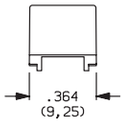

J50 ROCKER

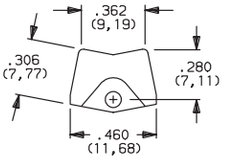

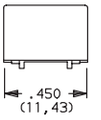

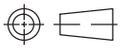

Third Angle Projection

Dimensions are shown: Inches (mm)
Specifications and dimensions subject to change

ACTUATOR–PC MOUNT

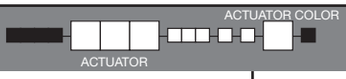

J60 LEVER

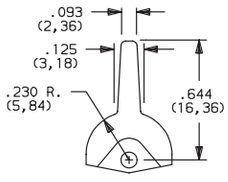

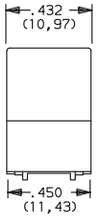

OPTION CODE	ACTUATOR COLOR
2	BLACK
1	WHITE
3	RED

Finish: Matte. Other colors, custom actuator markings and legends available, consult Customer Service Center.

NOTE: Some permissible actuator/termination combinations may lack clearance between actuator and PC board, and care must be exercised to accommodate this condition.

Actuators available separately, see page G-21 through G-22. J60 & J90 actuators available with A (DP, 3P models only), A3 (DP, 3P models only), AV2, AV3, AW3 (DP, 3P models only) & V2-V61 terminations.

J90 LEVER

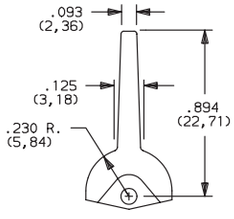

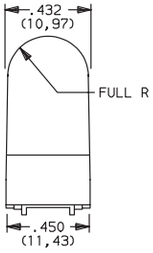

TERMINATIONS

Z SOLDER LUG

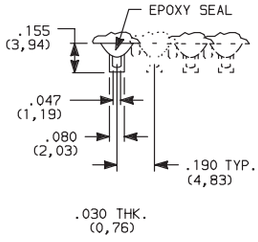

SPDT thru 4PDT

Not available with P, R or S contact materials. Available actuators, see pages G-7 through G-13.

C PC THRU-HOLE

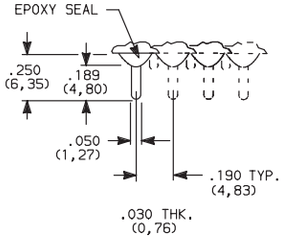

PC MOUNTING

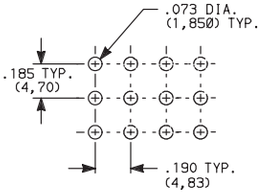

SPDT thru 4PDT **NOTE:** Available actuators, see pages G-7 through G-13.

Z3 QUICK CONNECT

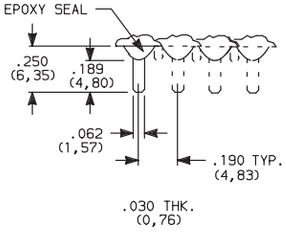

SPDT thru 4PDT

Not available with P, R or S contact materials. Available actuators, see pages G-7 through G-13. Mating quick connector available; order part number 530100000, page G-22.

W, W3, W5 WIRE WRAP

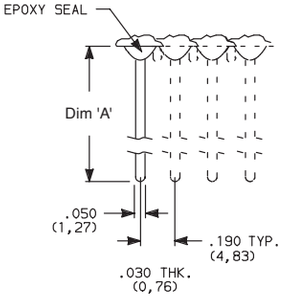

OPTION CODE	DIM 'A'
W	.750 (19,05)
W3	.425 (10,80)
W5	1.305 (33,15)

SPDT thru 4PDT

NOTE: Available actuators, see pages G-7 through G-13.

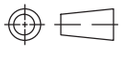

Third Angle Projection

Dimensions are shown: Inches (mm)
Specifications and dimensions subject to change

TERMINATIONS

A RIGHT ANGLE, PC THRU-HOLE

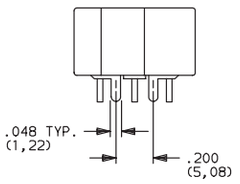

Actuator Shown In Pos. 1

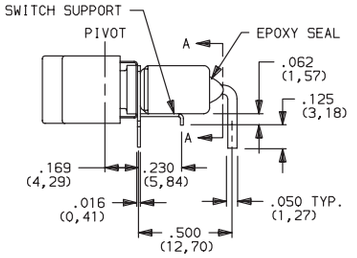

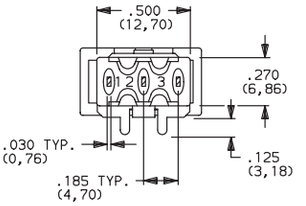

SECTION A-A

7101J1ABE2
Horizontal Actuation
SPDT

A3 RIGHT ANGLE, SNAP-IN, PC THRU-HOLE

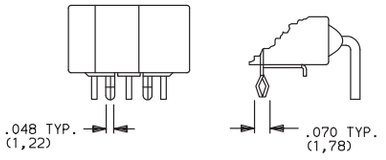

AW3 RIGHT ANGLE, EXTENDED, PC THRU-HOLE

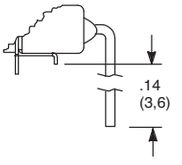

PC MOUNTING

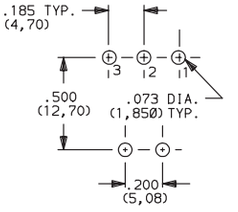

Not available with I seal option. Available actuators, see pages G-6 and G-12.
Terminal bend radii and lead-in manufacturing option.

NOTE: PC pattern must clear switch support leg.

A RIGHT ANGLE, PC THRU-HOLE

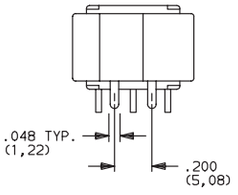

Actuator Shown In Pos. 1

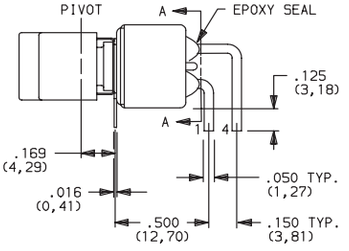

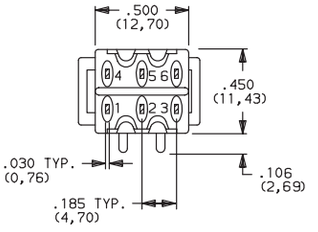

SECTION A-A

7201J1ABE2
Horizontal Actuation
DPDT

A3 RIGHT ANGLE, SNAP-IN, PC THRU-HOLE

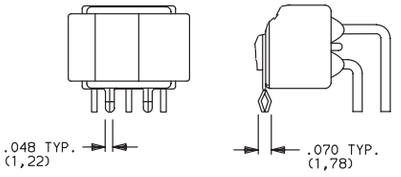

PC MOUNTING

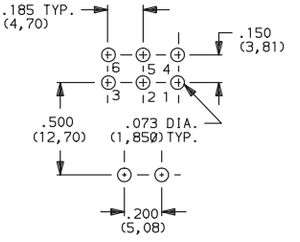

Not available with I seal option. Available actuators, see pages G-6 and G-12.
Terminal bend radii and lead-in manufacturing option.

Third Angle Projection

Dimensions are shown: Inches (mm)
Specifications and dimensions subject to change

TERMINATIONS

A RIGHT ANGLE, PC THRU-HOLE

7301J1ABE2
Horizontal Actuation
3PDT

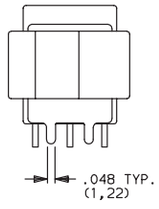

Actuator Shown In Pos. 1

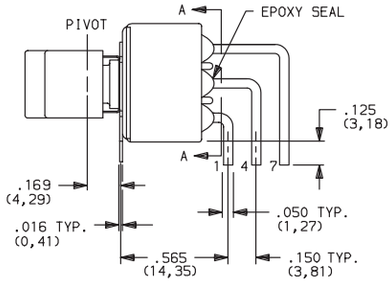

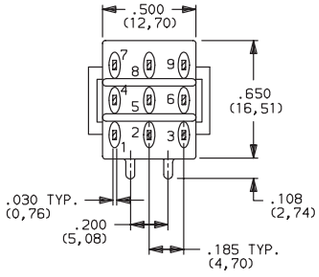

SECTION A-A

PC MOUNTING

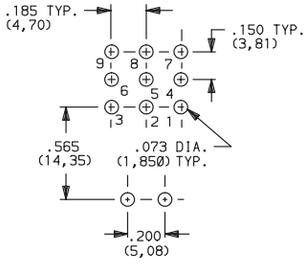

Not available with I seal option. Available actuators, see pages G-6 and G-12.
Terminal bend radii and lead-in manufacturing option.

AV2 VERTICAL RIGHT ANGLE, PC THRU-HOLE, .150" PITCH

7101J1AV2BE2
Vertical Actuation
SPDT

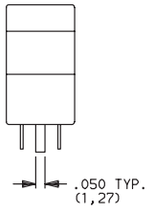

Actuator Shown In Pos. 1

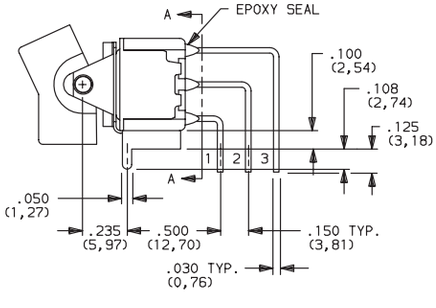

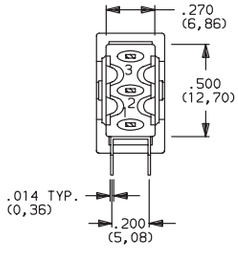

SECTION A-A

AV3 VERTICAL RIGHT ANGLE, SNAP-IN, PC THRU-HOLE, .150" PITCH

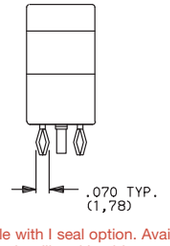

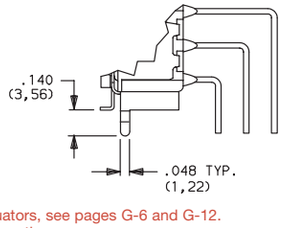

PC MOUNTING

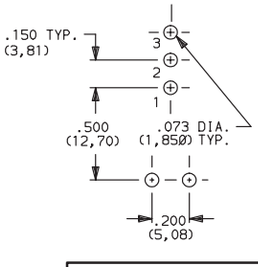

Not available with I seal option. Available actuators, see pages G-6 and G-12.
Terminal bend radii and lead-in manufacturing option.

Third Angle Projection

Dimensions are shown: Inches (mm)
Specifications and dimensions subject to change

TERMINATIONS

AV2
VERTICAL RIGHT ANGLE, PC THRU-HOLE,
.150" PITCH

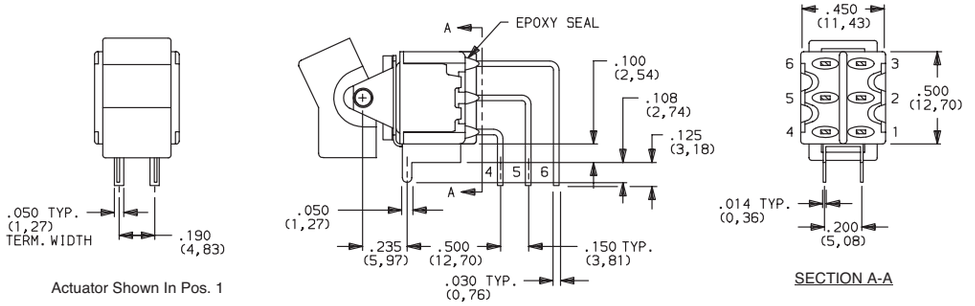

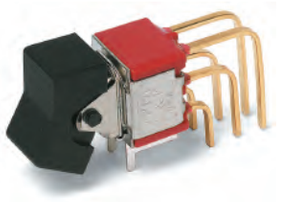

7201J1AV2BE2
Vertical Actuation
DPDT

AV3
VERTICAL RIGHT ANGLE, SNAP-IN, PC THRU-HOLE,
.150" PITCH

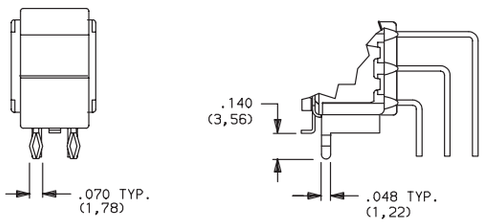

PC MOUNTING

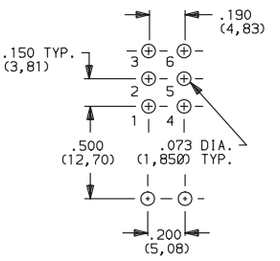

Not available with I seal option. Available actuators, see pages G-6 and G-12.
Terminal bend radii and lead-in manufacturing option.

AV2
VERTICAL RIGHT ANGLE, PC THRU-HOLE,
.150" PITCH

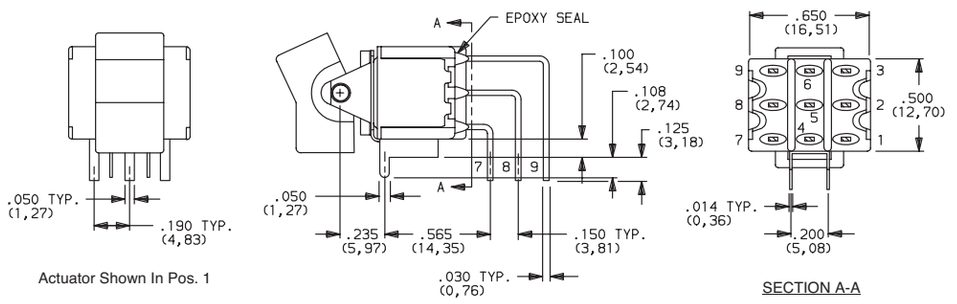

7301J1AV2BE2
Vertical Actuation
3PDT

AV3
VERTICAL RIGHT ANGLE, SNAP-IN, PC THRU-HOLE,
.150" PITCH

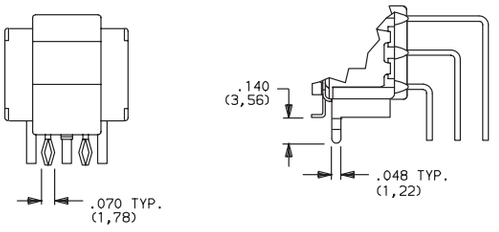

PC MOUNTING

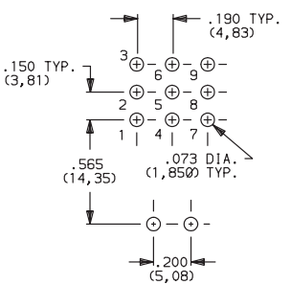

Not available with I seal option. Available actuators, see pages G-6 and G-12.
Terminal bend radii and lead-in manufacturing option.

Third Angle Projection

Dimensions are shown: Inches (mm)
Specifications and dimensions subject to change

TERMINATIONS

AV2 VERTICAL RIGHT ANGLE, PC THRU-HOLE, .150" PITCH

7401J1AV2BE2
Vertical Actuation
4PDT

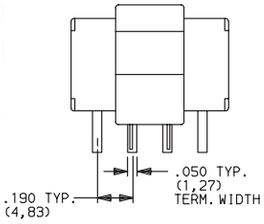

Actuator Shown In Pos. 1

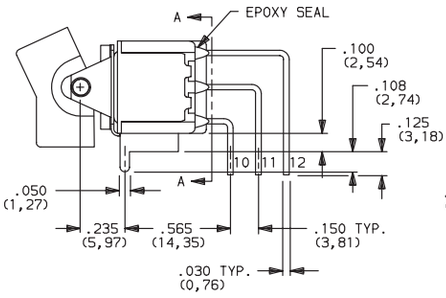

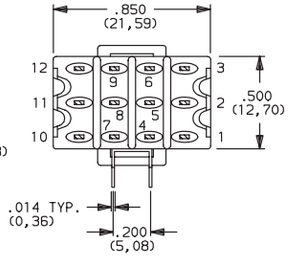

SECTION A-A

AV3 VERTICAL RIGHT ANGLE, SNAP-IN, PC THRU-HOLE, .150" PITCH

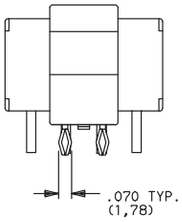

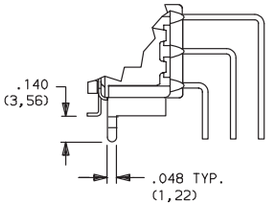

PC MOUNTING

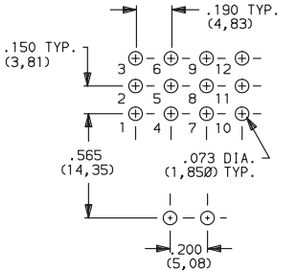

Not available with I seal option. Available actuators, see pages G-6 and G-12.
Terminal bend radii and lead-in manufacturing option.

V5 VERTICAL RIGHT ANGLE, PC THRU-HOLE, .150" PITCH

7101J1V5BE2
Vertical Actuation
SPDT

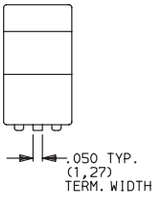

Actuator Shown In Pos. 1

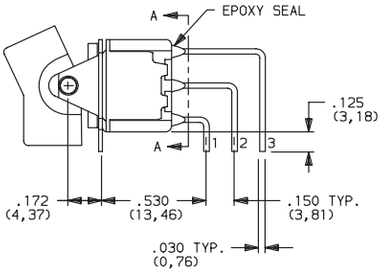

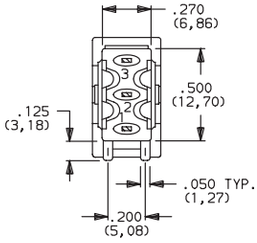

SECTION A-A

V51 VERTICAL RIGHT ANGLE, SNAP-IN, PC THRU-HOLE, .150" PITCH

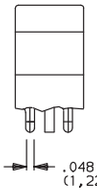

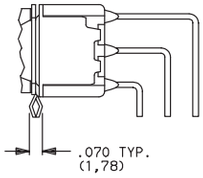

PC MOUNTING

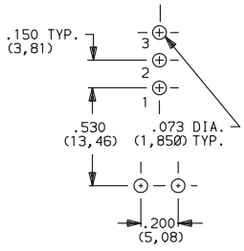

Not available with I seal option. Available actuators, see pages G-6 and G-12.
Terminal bend radii and lead-in manufacturing option.

Third Angle Projection

Dimensions are shown: Inches (mm)
Specifications and dimensions subject to change

TERMINATIONS

V5 VERTICAL RIGHT ANGLE, PC THRU-HOLE, .150" PITCH

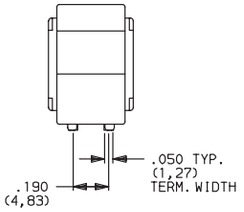

Actuator Shown In Pos. 1

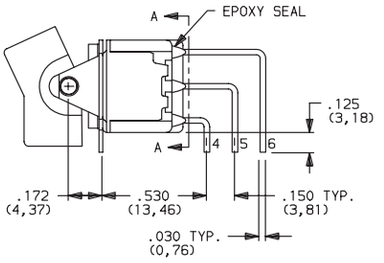

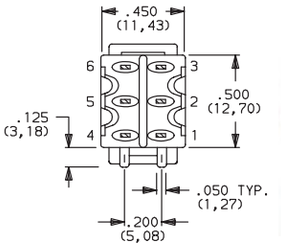

SECTION A-A

7201J1V5BE2
Vertical Actuation
DPDT

V51 VERTICAL RIGHT ANGLE, SNAP-IN, PC THRU-HOLE, .150" PITCH

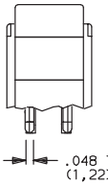

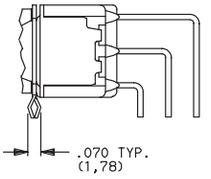

PC MOUNTING

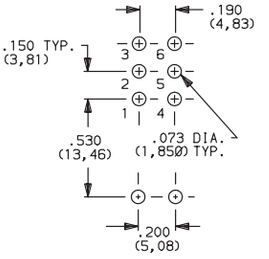

Not available with I seal option. Available actuators, see pages G-6 and G-12.
Terminal bend radii and lead-in manufacturing option.

V2, V6, V7, V8 VERTICAL MOUNT, V-BRACKET

V61 VERTICAL MOUNT, V-BRACKET, SNAP-IN

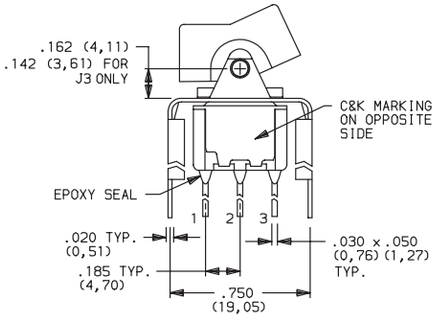

Actuator Shown In Pos. 1

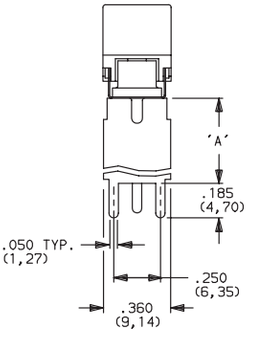

PC MOUNTING

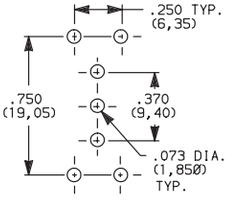

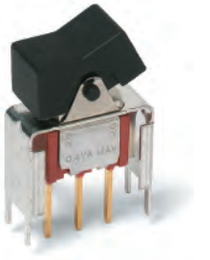

7101J1__BE2
SPDT

OPTION CODE	DIM 'A'
V2, V21	.555 (14,10)
V6, V61	.460 (11,68)
V7	.630 (16,00)
V8	.953 (24,21)

Not available with I seal option.
Available actuators, see pages G-6 and G-12.

Third Angle Projection

Dimensions are shown: Inches (mm)
Specifications and dimensions subject to change

TERMINATIONS

V2, V6, V7, V8 VERTICAL MOUNT, V-BRACKET
V21, V61 VERTICAL MOUNT, V-BRACKET, SNAP-IN

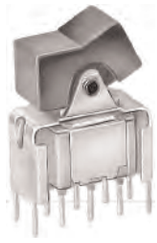

7201J1__BE2
DPDT

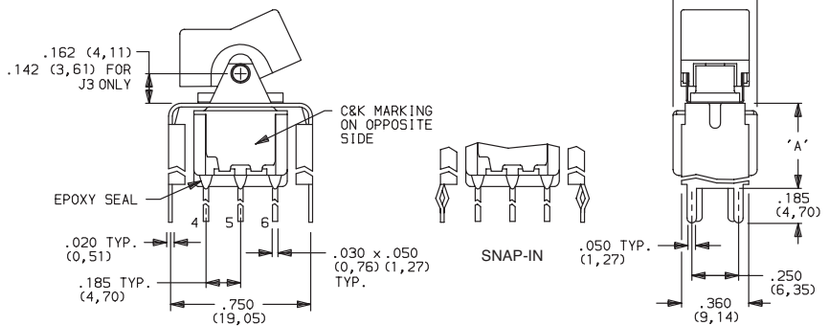

Actuator Shown In Pos. 1

PC MOUNTING

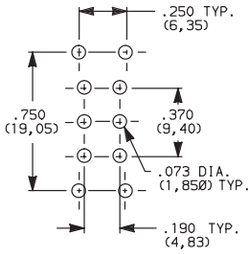

OPTION CODE	DIM 'A'
V2, V21	.555 (14,10)
V6, V61	.460 (11,68)
V7	.630 (16,00)
V8	.953 (24,21)

Not available with I seal option.
Available actuators, see pages G-6 and G-12.

V2, V7, V8 VERTICAL MOUNT, V-BRACKET
V21 VERTICAL MOUNT, V-BRACKET, SNAP-IN

7301J1__BE2
3PDT

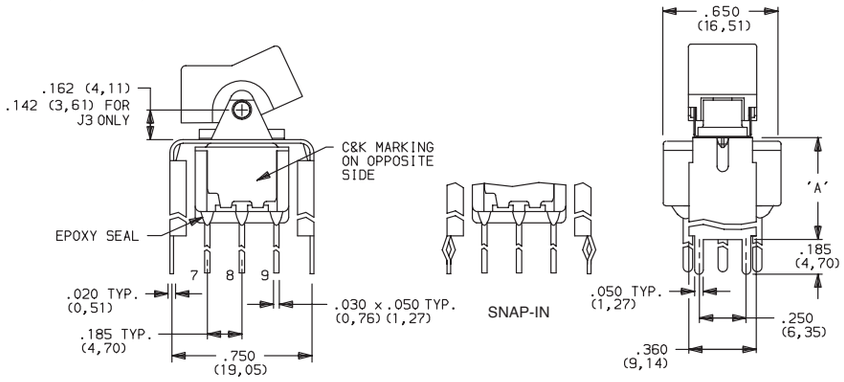

Actuator Shown In Pos. 1

PC MOUNTING

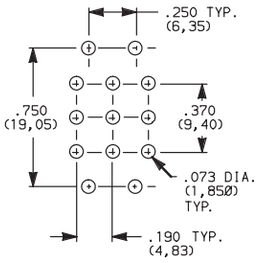

OPTION CODE	DIM 'A'
V2, V21	.555 (14,10)
V7	.630 (16,00)
V8	.953 (24,21)

Not available with I seal option.
Available actuators, see pages G-6 and G-12.

V2, V7, V8 VERTICAL MOUNT, V-BRACKET
V21 VERTICAL MOUNT, V-BRACKET, SNAP-IN

7401J1__BE2
4PDT

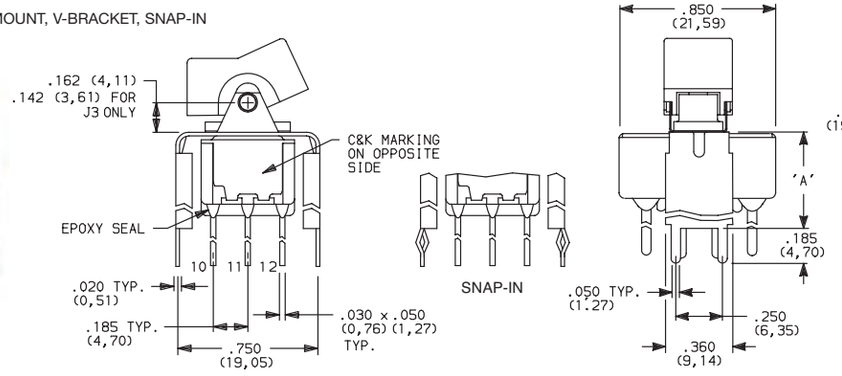

Actuator Shown In Pos. 1

PC MOUNTING

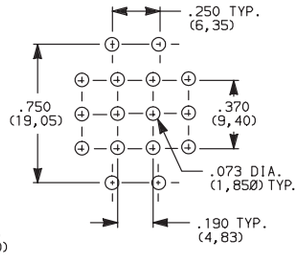

OPTION CODE	DIM 'A'
V2, V21	.555 (14,10)
V7	.630 (16,00)
V8	.953 (24,21)

Not available with I seal option.
Available actuators, see pages G-6 and G-12.

Third Angle Projection

Dimensions are shown: Inches (mm)
Specifications and dimensions subject to change

TERMINATIONS

V3, V4, V9 VERTICAL MOUNT, V-BRACKET
V31 VERTICAL MOUNT, V-BRACKET, SNAP-IN

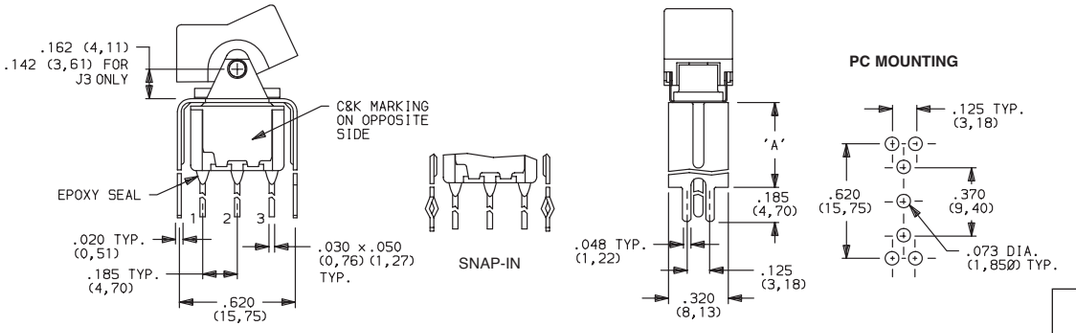

Actuator Shown In Pos. 1

7101J1__BE2
SPDT

OPTION CODE	DIM 'A'
V3, V31	.460 (11,68)
V4	.630 (16,00)
V9	1.150 (29,21)

Not available with I seal option.
Available actuators, see pages G-6 and G-12.

V3, V4, V9 VERTICAL MOUNT, V-BRACKET
V31 VERTICAL MOUNT, V-BRACKET, SNAP-IN

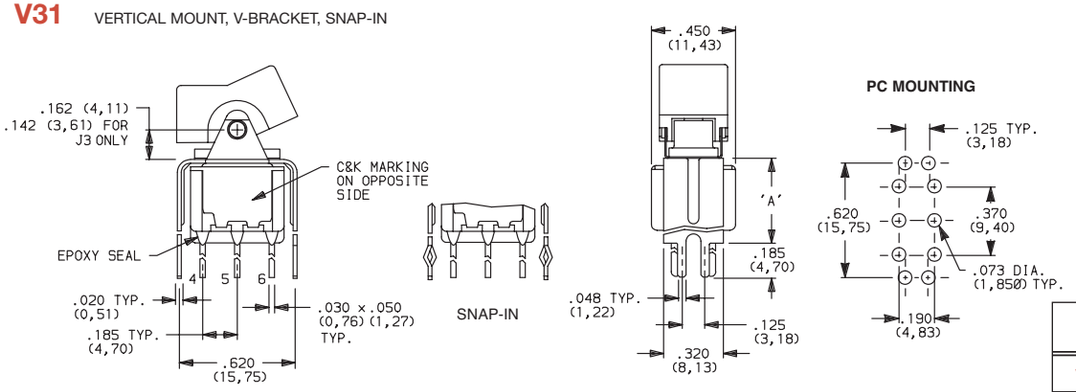

Actuator Shown In Pos. 1

7201J1__BE2
DPDT

OPTION CODE	DIM 'A'
V3, V31	.460 (11,68)
V4	.630 (16,00)
V9	1.150 (29,21)

Not available with I seal option.
Available actuators, see pages G-6 and G-12.

V4, V9 VERTICAL MOUNT, V-BRACKET

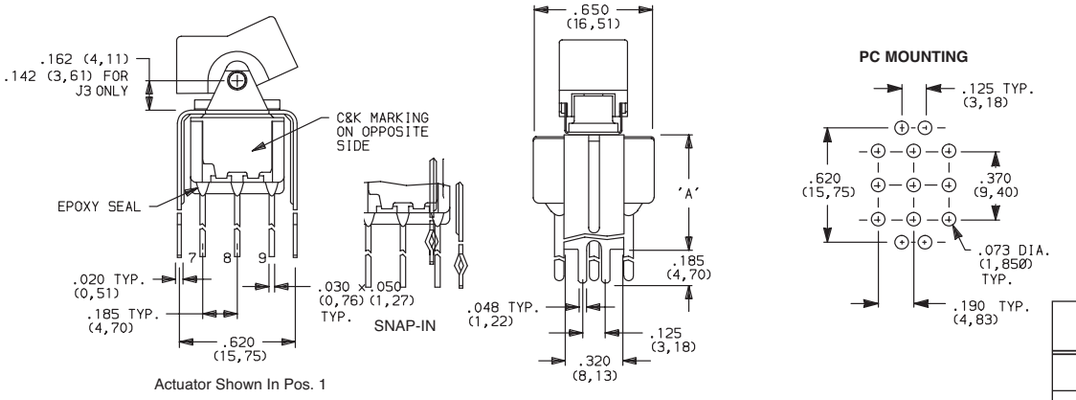

Actuator Shown In Pos. 1

7301J1__BE2
3PDT

OPTION CODE	DIM 'A'
V4	.630 (16,00)
V9	1.150 (29,21)

Not available with I seal option.
Available actuators, see pages G-6 and G-12.

Third Angle Projection

Dimensions are shown: Inches (mm)
Specifications and dimensions subject to change

7000 Series
Miniature Rocker & Lever Handle Switches

TERMINATIONS

V4, V9 VERTICAL MOUNT, V-BRACKET

7401J1__BE2
4PDT

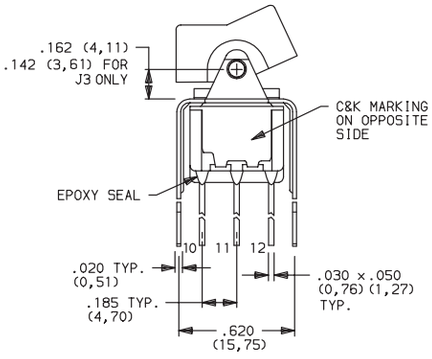

Actuator Shown In Pos. 1

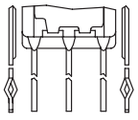

SNAP-IN

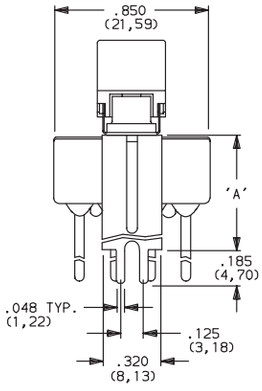

PC MOUNTING

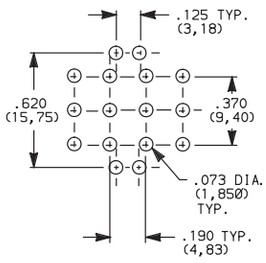

OPTION CODE	DIM 'A'
V4	.630 (16,00)
V9	1.150 (29,21)

Not available with I seal option.
Available actuators, see pages G-6 and G-12.

CONTACT MATERIAL

OPTION CODE	CONTACT MATERIAL	TERMINAL PLATING	RATINGS	
B	GOLD [1]	GOLD [1]	LOW LEVEL/ DRY CIRCUIT	0.4 VA MAX. @ 20 V AC OR DC MAX.
P		MATTE-TIN [6]		
Q	SILVER [4,5]	SILVER [5]	POWER	5 AMPS @ 120 V AC OR 28 V DC; 2 AMPS @ 250 V AC.
S		MATTE-TIN [6]		
G	GOLD OVER SILVER [2,3]	GOLD [3]	LOW LEVEL/DRY CIRCUIT OR POWER	0 4 VA MAX @ 20 V AC OR DC MAX OR 5 AMPS @ 120 V AC OR 28 V DC; 2 AMPS @ 250 V AC.
R		MATTE-TIN [6]		

* Note: See Technical Data section of this catalog for RoHS compliant and compatible definitions and specifications.

[1] CONTACTS & TERMINALS: Copper alloy, with gold plate over nickel plate.
[2] END CONTACTS: Coin silver, with gold plate over nickel plate.
[3] CENTER CONTACTS & ALL TERMINALS: Copper alloy, with gold plate over nickel plate.
[4] END CONTACTS: Coin silver, silver plated.
[5] CENTER CONTACT & ALL TERMINALS: Copper alloy, silver plated.
[6] TERMINALS: Copper alloy, with matte-tin over nickel plate.

U11-U415 model numbers c UL us with all options when ordered with G, Q, S & R contact material.

B contact material standard with all terminations except C, Z & Z3.

Q contact material standard with C, Z & Z3 terminations.

P, S & R, contact materials not available with Z & Z3 terminations.

NOTE: Any models supplied with Q, B, G S, P & R contact material are RoHS compliant.

SEAL

E EPOXY SEAL

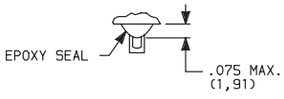

I EPOXY POTTED BASE

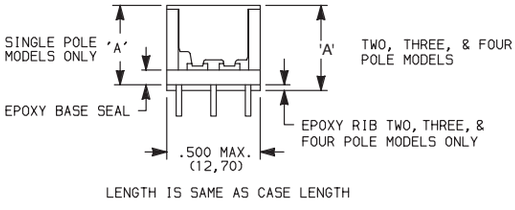

NO. POLES	DIM 'A'
SP	.410 (10,41)
DP	.440 (11,18)
3P	.505 (12,83)
4P	.505 (12,83)

Available with C, W through W5, Z & Z3 terminations.

Third Angle Projection

Dimensions are shown: Inches (mm)
Specifications and dimensions subject to change

AVAILABLE HARDWARE

Panel mounting hardware for rocker and lever handle switches is available separately. Mounting hardware consists of two screws, two nuts, two standoffs and two lockwashers per switch, and is available for panel thicknesses of 1/16, 3/32 and 1/8 inch. See part numbers below.

Qty	Part Number	Description
2	761103000	Standoffs
2	764100000	Mounting screws
2	764200000	Lock washers
2	764300000	Hex nuts

TYPICAL ASSEMBLY

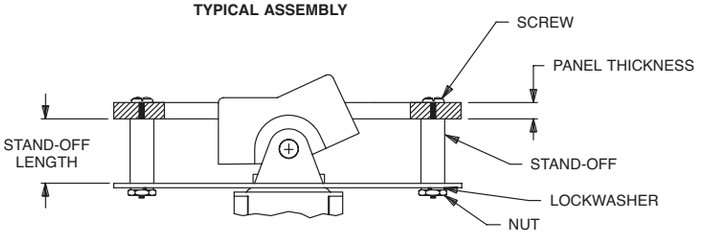

J1 & J2 actuators

PART NO.	PANEL THK.	STANDOFF LENGTH
761103000	1/8 IN. (3,18)	.233 (5,92)

J3 actuators

PART NO.	PANEL THK.	STANDOFF LENGTH
770603000	1/8 IN. (3,18)	.233 (5,92)

J10 actuators

PART NO.	PANEL THK.	STANDOFF LENGTH
770703000	1/8 IN. (3,18)	.233 (5,92)

MATERIAL

Screws, nuts, lockwashers: Stainless steel. Standoffs: Nylon, standard.

J1, J11, J15 & J16 Actuators

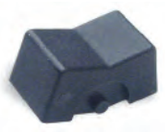

PART NO.
776A01000 **WHITE**
776A02263 **BLACK**
776A03000 **RED**

Material: Nylon
Finish: Matte

J2, J21, J25 & J26 Actuators

PART NO.
426D01000 **WHITE**
426D02263 **BLACK**
426D03000 **RED**

Material: Nylon
Finish: Matte

J3 & J37 Actuators

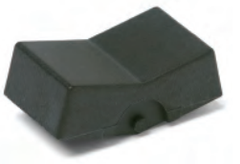

PART NO.
431D01000 **WHITE**
431D02263 **BLACK**
431D03000 **RED**

Material: Nylon
Finish: Matte

J50, J51 & J52 Actuators

PART NO.
775A01000 **WHITE**
775A02263 **BLACK**
775A03000 **RED**

Material: Nylon
Finish: Matte

J60, J61 & J62 Actuators

PART NO.
598101000 **WHITE**
613802263 **BLACK**
598103000 **RED**

Material: Nylon
Finish: Matte

J8 Actuator

PART NO.
488701000 **WHITE**
488702263 **BLACK**
488703000 **RED**

Material: Nylon
Finish: Matte

Dimensions are shown: Inches (mm)
Specifications and dimensions subject to change

7000 Series
Miniature Rocker & Lever Handle Switches

AVAILABLE HARDWARE

J90 & J91 Actuators

PART NO.

598001000 WHITE
598002263 BLACK
598003000 RED

Material: Nylon
Finish: Matte

J10 & J19 Actuators

PART NO.

769501000 WHITE
769502263 BLACK
769503000 RED

Material: Nylon
Finish: Matte

Fits Z3 Termination female connector

PART NO.

530100000

Available in loose pieces.

Frame for J11 & J21 Actuators

PART NO.

764500746 BLACK ENAMEL
764500747 WHITE ENAMEL

764601106 RETAINING SPRING

Material: Spring Steel

Frame for J16 & J26 Actuators

PART NO.

459101000 WHITE
459102000 BLACK
459103000 RED

Material: Nylon
Finish: Matte

Frame for J51, J61 & J91 Actuators

PART NO.

615601000 WHITE
615602263 BLACK
615603000 RED

Material: Nylon
Finish: Matte

Frame for J19 Actuator

PART NO.

781000746 BLACK ENAMEL
781000747 WHITE ENAMEL

Material: Spring Steel

Frame for J37 Actuator

PART NO.

445400746 BLACK ENAMEL
445400747 WHITE ENAMEL

Material: Spring Steel

Frame for J52 & J62 Actuators

PART NO.

613301000 WHITE
613302263 BLACK
613303000 RED

Material: Nylon
Finish: Matte

Third Angle Projection

Dimensions are shown: Inches (mm)
Specifications and dimensions subject to change