Pushbutton Switches/Selector Switches/Indicators
A22N/M22N/A30N

Control panel miniaturization through a more compact design and modified wiring direction
Addition of Push-In Plus terminal blocks for easy wiring
Workability and safety improvements

22 dia.

A22N/M22N Series

Screw terminal block type
Push-In Plus terminal block type

Pushbutton Switches
A22NN/A22NL
A22NN-P/A22NL-P

Page 2

Selector Switches
A22NS/A22NW
A22NS-P/A22NW-P

Page 20

Key-type Selector Switches
A22NK
A22NK-P

Page 35

Indicators
M22N
M22N-P

Page 47

30 dia.

A30N Series

Screw terminal block type
Push-In Plus terminal block type

Pushbutton Switches
A30NN/A30NL
A30NN-P/A30NL-P

Page 53

Selector Switches
A30NS/A30NW
A30NS-P/A30NW-P

Page 64

Key-type Selector Switches
A30NK
A30NK-P

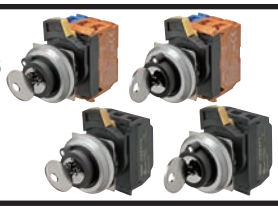

Page 74

Pushbutton Switches

A22NN/A22NL

22-mm dia. Pushbutton Switches
Control panel miniaturization through a more compact design and modified wiring direction. Addition of Push-In Plus terminal blocks for easy wiring.

Easy to Use

- Improved wiring visibility through to a modified wiring direction. (Push-In Plus terminal block type)
- Screw terminal block structure is compatible with round crimp terminals. (Screw terminal block type)
- The terminals can be secured even when a contact block is mounted. (Screw terminal block type)
- Contact Blocks can be attached in any direction for easy assembly.

Miniaturization

- No need for extra lateral space because of the modified wiring direction. (Push-In Plus terminal block type)
- Compact design.
- A22NL (lighted models) are the same size as A22NN (non-lighted models).

Safety

- Easy-to-operate lock lever for secure locking.
- Easy-mounting Contact Blocks provide finger protection.
- No loose connections of wiring means maintenance-free use. (Push-In Plus terminal block type)

Product Lineup

- Meet global safety standards.
- Can be installed in two types of panel hole dimensions: 22.3 and 25.5 dia.
- The buttons and bezels come in a wide variety of colors, shapes, and materials.
- Standard-feature degree of protection: IP66, NEMA 4X, and NEMA 13.

⚠ **Refer to *Safety Precautions for All Pushbutton Switches/ Indicators* and *Safety Precautions* on page 88.**

Button Colors

Non-lighted Switches	A22NN-□□□-N□ Opaque		Red	Green	Yellow	White	Blue	Black	
	A22NN-□□□-U□ Transparent		Red	Green	Yellow	White	Blue	Orange	
Lighted Switches	A22NL-□□□-T□ Transparent	When not lit	Red	Green	Yellow	White	Blue	Orange	White
		When lit	Red	Green	Yellow	White	Blue	Orange	Opaque white*

* The colors when the Switches are lit are for transparent white buttons (code: TW) and yellow LED Lamps (code: Y).

List of Models

Screw Terminal Blocks/Push-In Plus Terminal Blocks		
Plastic bezels	**Brushed metal bezels**	**Metal bezels**
A22N□-BN	**A22N□-MN**	**A22N□-RN**
Flat 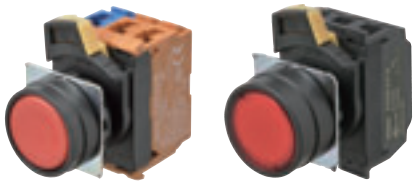	Flat	Flat
A22N□-BP	**A22N□-MP**	**A22N□-RP**
Projected	Projected	Projected 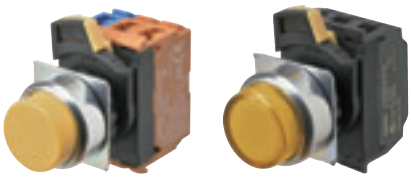
A22N□-BG	**A22N□-MG**	
Full guard	Full guard 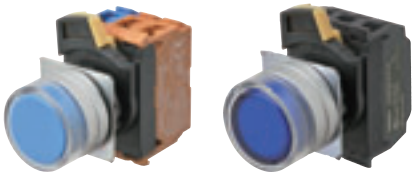	
A22N□-BM	**A22N□-MM**	**A22N□-RM**
Mushroom	Mushroom	Mushroom 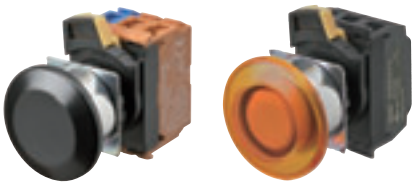

Dimension A

Wire type	Number of linked Contact Blocks	Number of wires per terminal	Minimum allowable pitch Dimension A (mm) or larger
Leads (stranded wire / solid wire)	1	1	50
Bare crimp terminals	1	1	50
Crimp terminals with insulating sheathes	1	1	60

Note: The minimum mounting pitch is based on three Contact Blocks in stage 1 with one wire attached to each terminal.
If the Mounting Collar lock levers all face the same direction at the minimum mounting pitch, be sure to note the order the mounting collars are attached to the Operation Unit.
If you attach two wires or link Units, determine the mounting pitch based on the dimensions diagrams and ease of operation and wiring.

Dimension B

Operation Unit shape	Dimension B
Mushroom	40 mm min.
Other than the above	35 mm min.

Mounting the Operation Unit

<A22N>

- Panel Hole of 22.3-mm Diameter
  Insert the Operation Unit from the front of the panel, insert the Lock Ring and Mounting Nut from the back of the panel, and tighten the Mounting Nut. Before tightening, check that the rubber washer is present between the Operation Unit and the panel.

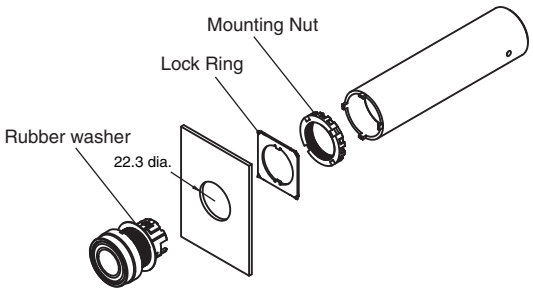

- Panel Hole of 25.5-mm Diameter
  Do not use the Lock Ring, and tighten the Mounting Nut while confirming that the projecting part (see following figure) on the Mounting Nut is aligned with mounting hole. Before tightening, check that the rubber washer is present between the Operation Unit and the panel.

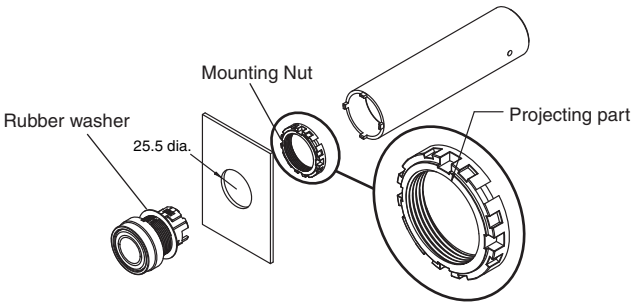

- Align the Lock Ring with the slot on the case and insert it so that the edge is flush with the panel.

<A30N>

- Insert the Operation Unit from the front of the panel, insert the Lock Ring and Mounting Nut from the back of the panel, and tighten the Mounting Nut. Before tightening, check that the rubber washer is present between the Operation Unit and the panel.

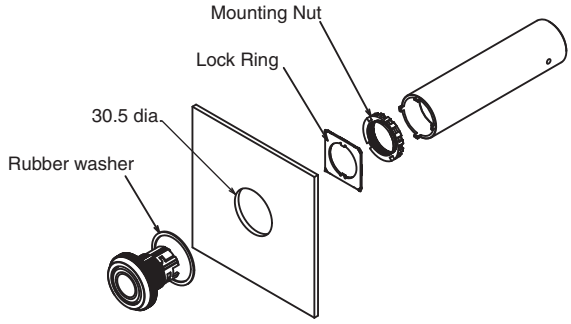

Mounting the Indicator Unit

<M22N>

- Panel Hole of 22.3-mm Diameter
  Insert the Indicator Unit from the front of the panel, insert the Mounting Nut from the back of the panel, and tighten the Mounting Nut. Before tightening, check that the rubber washer is present between the Indicator Unit and the panel.

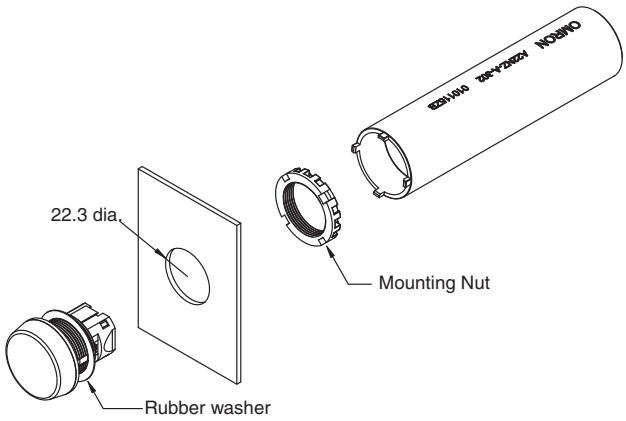

- Panel Hole of 25.5-mm Diameter
  Tighten the Mounting Nut while confirming that the projecting part (see following figure) on the Mounting Nut is aligned with mounting hole. Before tightening, verify that the rubber washer is present between the Operation Unit and the panel.

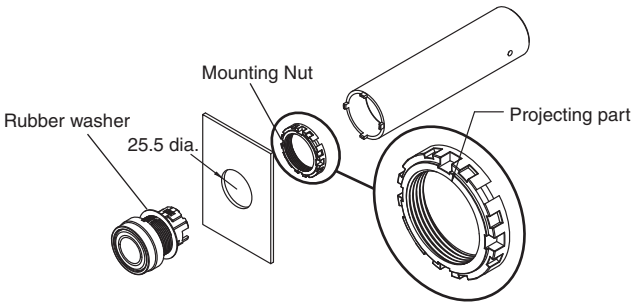

Mounting the Lock Ring

<A22N/A30N>

- Align the grooves on the Operation Unit with the protruding parts of the Lock Ring and mount.

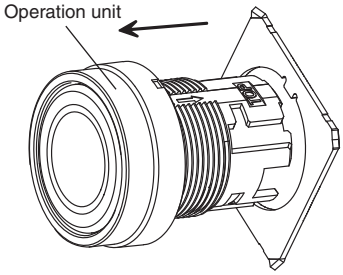

- When experiencing difficulties when mounting a Lock Ring, use the following procedure.
  1. Insert the Lock Ring into groove A on the Operation Unit.

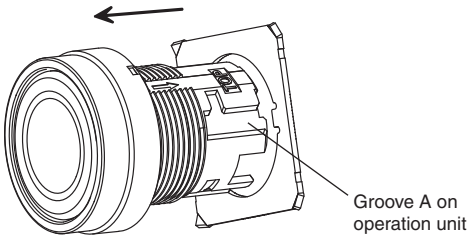

  2. When the Lock Ring is in the position shown in the figure below, rotate it to insert the protruding part of the Lock Ring into groove B on the Operation Unit.

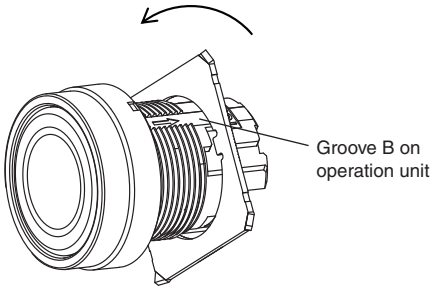

  3. When the Lock Ring is in the position shown in the figure below, move it in the direction indicated by the arrow.

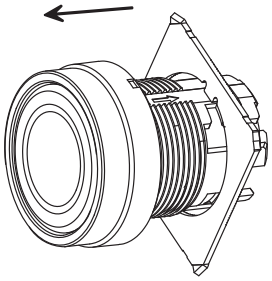

Mounting the Contact Block to the Operation Unit

<A22N/A30N>

- Insert the Operation Unit into the Mounting Collar, aligning the TOP mark inscribed on the Operation Unit with the lever on the Mounting Collar, and then turn the lever in the direction indicated by the arrow in the following figure all of the way until it clicks into place.

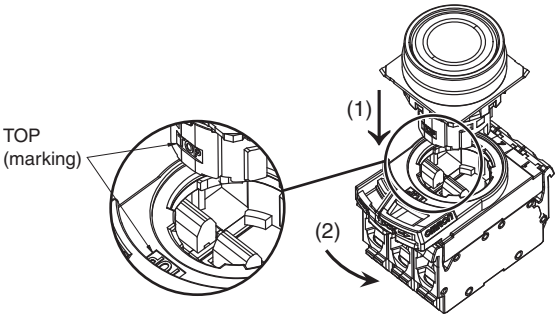

Removing the Mounting Collar

<A22N/A30N>

- Press the lock lever in from the back side to release the lock, and then hook the Mounting Collar with a screwdriver, move it in the direction indicated at (2), and remove it. Turn the lever all of the way until it clicks into place.

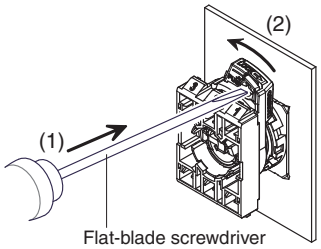

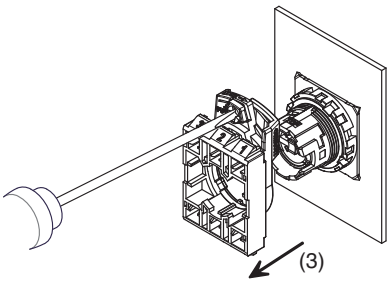

Attaching the Switch Unit to the Indicator Unit
<M22N>

- Align the "TOP" marks on the Indicator Unit and Switch Unit and insert the Indicator Unit into the Switch Unit. Insert it all the way until it clicks into place.

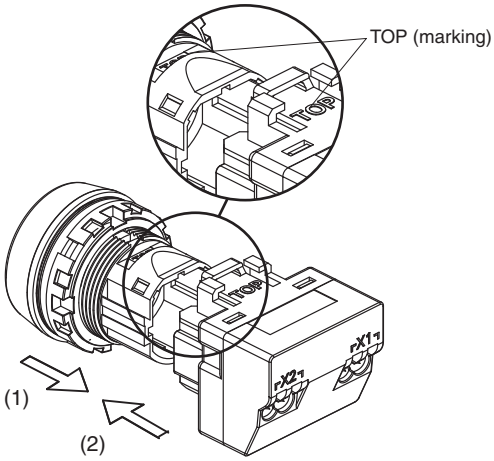

Removing the Switch Unit
<M22N>

- Insert a screwdriver into the tab on the Switch Unit. Move the screwdriver in direction (2) to remove the Switch Unit.

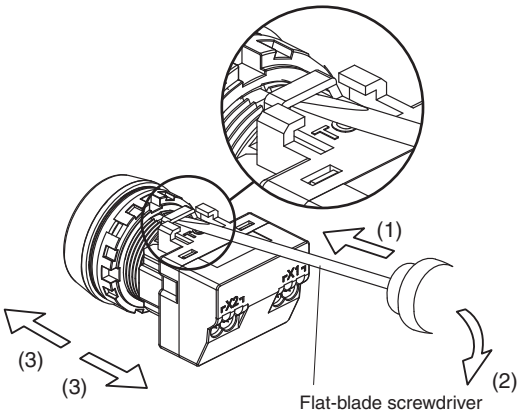

Contact Block and Lighting Unit

Attaching the Contact Block and Lighting Unit

- Catch the projection on the opposite side of the Mounting Collar from the lever side and press the Contact Block in the direction indicated at (1). Attach the Lighting Unit at Unit position 2 on the Mounting Collar.

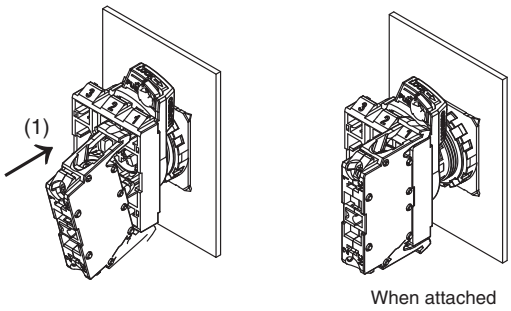

Removing the Contact Block and Lighting Unit

- Insert a screwdriver into the gap between the Mounting Collar and Contact Block and press it inward in the direction shown at (2). A Lighting Unit can be removed at Unit position 2 on the Mounting Collar.

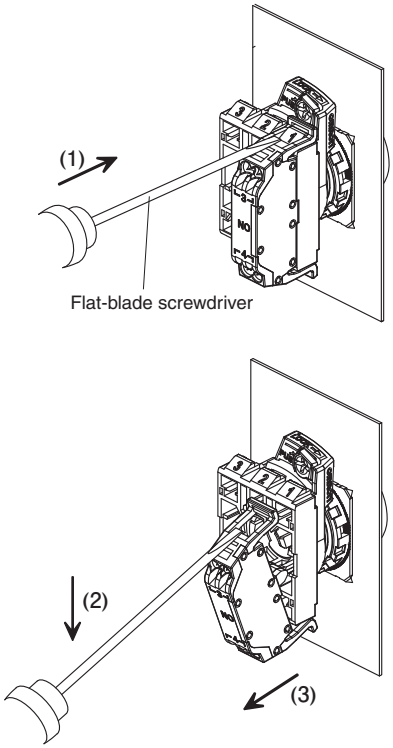

Attaching the Reinforcement Plate (Screw terminal block type)

- To link Contact Blocks together, attach a Reinforcement Plate in the direction shown in the following figure. To remove the Plate, insert a screwdriver in the direction indicated at (1) and rotate it in the direction indicated at (2).

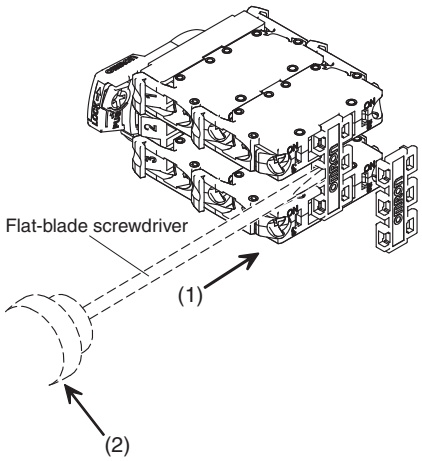

A22N/M22N/A30N

Engraving (Except for Non-Lighted / Opaque Types)

- Engrave legends on the Legend Plates.
  Do so with the straight part of the Legend Plate positioned on the right and left.
- The characters must be engraved no deeper than 0.5 mm. Use an alcohol-based paint, such as a melamine, phthalic acid, or acrylic resin based paint.

<A22N>

Projected, Full-guard, or Mushroom Switches	Flat Switches
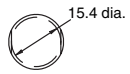	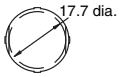

<M22N>

Flat Resin Legend Plate Type Switches

Attaching Character Films (Except for Non-Lighted / Opaque Types)

<A22N/A30N>

- To attach a character film, remove the Button and attach the film, aligning it with the straight portions of the Legend Plate.

Projected Switches

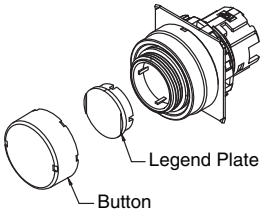

Full-guard Switches

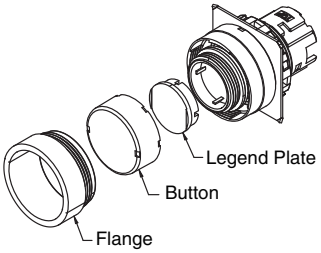

Mushroom Switches

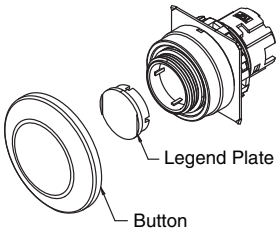

Flat Switches

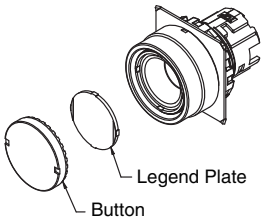

- Prepare films of the following sizes depending on the type of Legend Plate.
- The films must be provided by the user.

Projected, Full-guard, or Mushroom Switches	**Legend Plate dimensions**	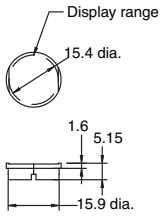
	Film dimensions	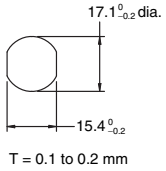
Flat Switches	**Legend Plate dimensions**	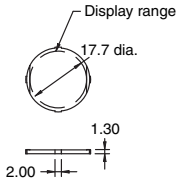
	Film dimensions	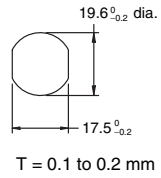

<M22N>

- To attach a character film, remove the Button and attach the film, aligning it with the straight portions of the Legend Plate.

Flat Etched Switches

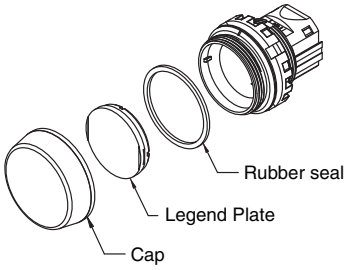

Flat Switches

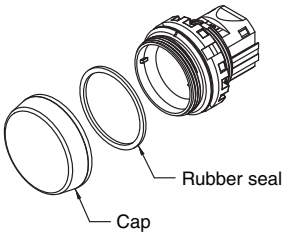

Semi-spherical Switches

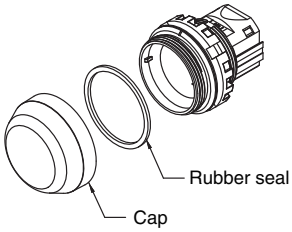

Projected Switches

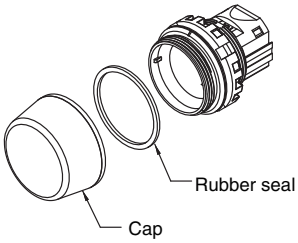

- Film processing dimensions should be as per the indications below.

Legend Plate dimensions	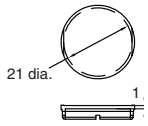
Film dimensions	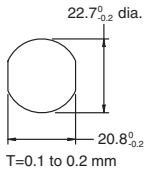

Removing and Tightening the Cap

For all Switches except for Mushroom Switches, use the A22Z-3908 Cap Tightening Tool to loosen the cap. When you tighten the cap, make sure that the Legend Plate is in the correct position and then turn the cap in the direction opposite of the direction shown in the following figure. Tighten it to a torque of 0.5 to 1.0 N·m so that it will not become loose.

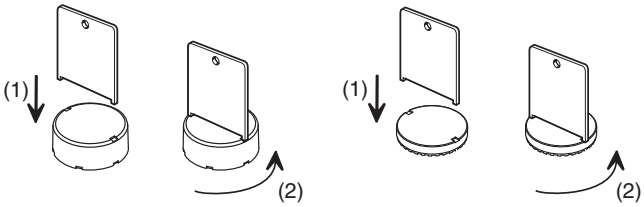

Attaching the LED Lamp to the Lighting Unit

- Insert the protrusions on the LED Lamp into the guides on the Lighting Unit and then turn the LED Lamp in direction (2) to lock it in place.

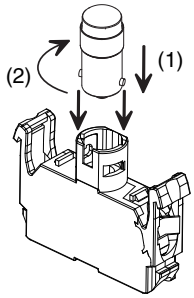

Attaching and Replacing LED Lamps

Removing the LED Lamp from the Panel Surface

- Insert the LED Lamp Extractor as shown in the following figure and then rotate the Extractor in the direction shown at (2) while pressing it inward.

<A22N>

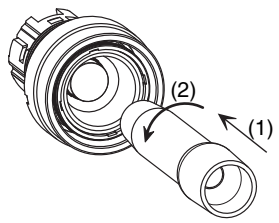

<M22N>

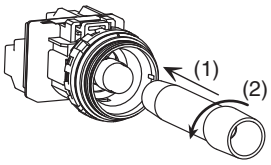

Attaching the LED Lamp from the Panel Surface

- Insert the LED Lamp into the LED Lamp Extractor as shown in the following figure. Align the projections on the LED Lamp with the LED Lamp insertion guides, insert the LED Lamp, and turn it in the direction indicted at (2).

<A22N>

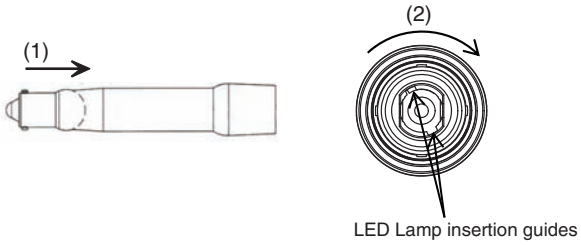

<M22N>

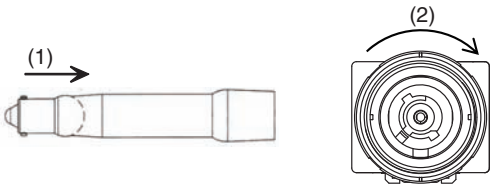

Control Box

You can attach a Legend Plate Frame.
Attach it in the direction shown in the following figure.
Mount the Switch in the same way as for a standard panel. The tightening torque of the Box screws is 1.4 to 2.0 N·m.

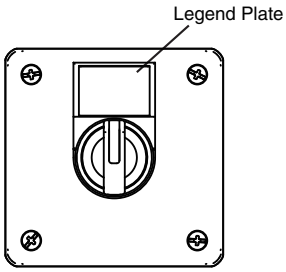

Creating a Cable Hole

To open a cable hole, leave the cover attached, place the tip of a screwdriver in the grooves at four locations around the cable hole, strike the screwdriver with a hammer in order at the four locations to open the hole, and remove the part from the cable hole.

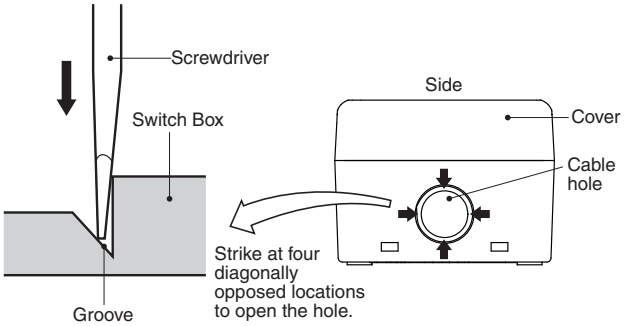

Attaching the Connector and Cable

1. Insert the connector into the cable port hole in the Box and secure with the fixing nut inside the box.
2. Run the cable through the tightening cap, insert the cable into the connector, and then tighten the hexagonal nut to secure the cable.

Cable diameter (mm)	Connector
7 to 9 dia.	A22Z-3500-1
9 to 11 dia.	A22Z-3500-2

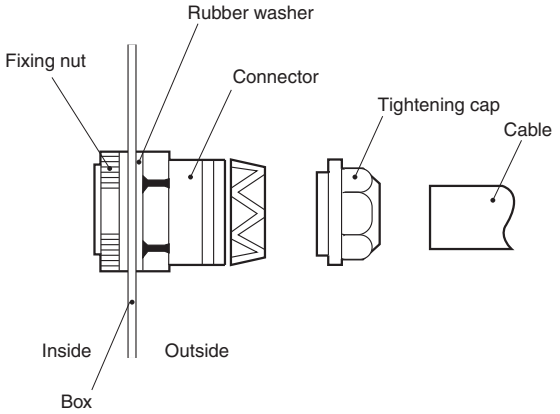

Attaching and Removing Legend Plates

- Press the Legend Plate into the depression in the Legend Plate Frame. The Legend Plate Frame can be separate or it can be mounted on the panel when you attach the Legend Plate.
- The direction of the characters will depend on the mounting direction of the Operation Unit if the Switch is a Selector Switch or Key Selector Switch.

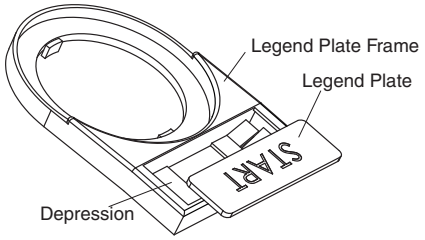

- You can easily remove the Legend Plate by pressing it forwards from the back of the Legend Plate Frame.
- The acrylic plastic Legend Plate is easily damaged by shock. Handle it with care.

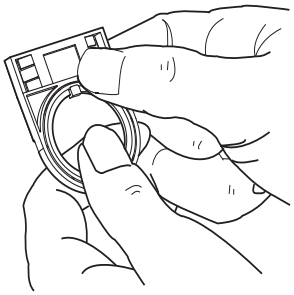

Attaching the Lock Ring

Attach the Lock Ring as shown in the following figure.
To ensure water resistance, attach the rubber washer in the specified location.

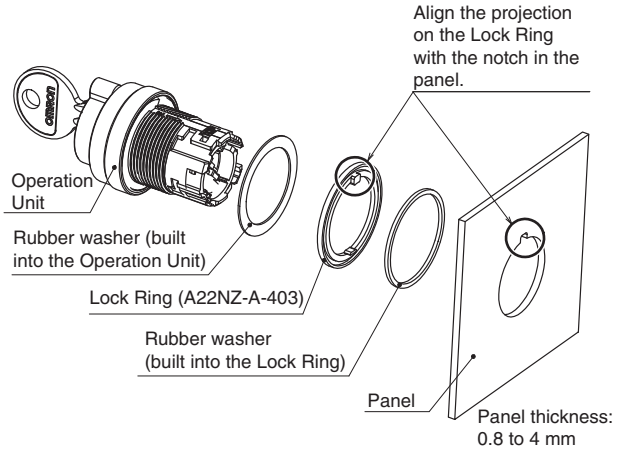

- Align the TOP mark on the Operation Unit, part A on the Legend Plate, and the notch in the panel, and insert the Operation Unit.

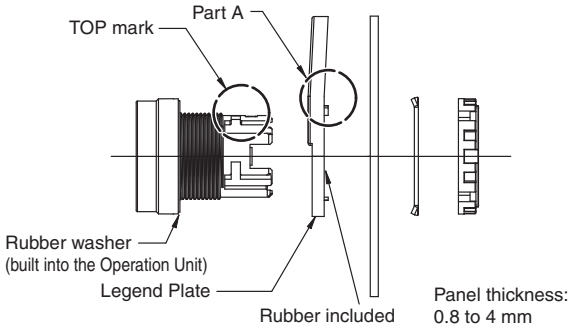

- If there is no notch in the panel, remove part A from the Legend Plate with pliers.

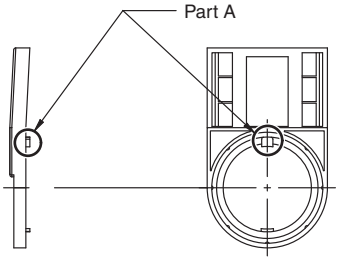

Attaching the Protective Cover

Attach the Protective Cover (A22NZ-A-303) to a panel that is 0.8 to 1.0 mm thick. To ensure water resistance, attach the rubber washer in the specified location.

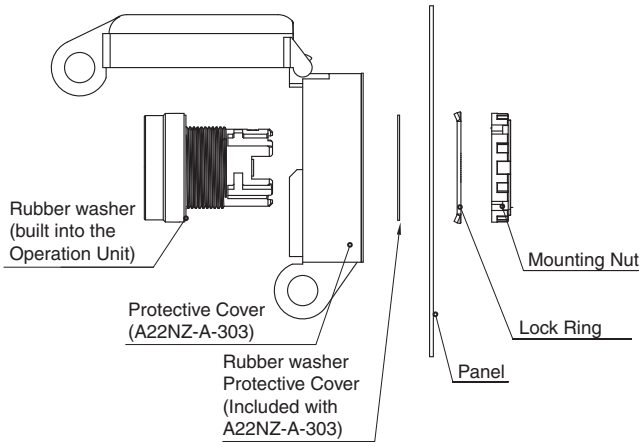

Attaching the Sealing Cap

<A22N/M22N>

- Panel acceptable thickness is given below.

Panel hole dimension	Panel thickness
22.3 dia.	0.8 to 4.2 mm
25.5 dia.	0.8 to 5.2 mm

Panel Hole of 22.3-mm Diameter

Attach the Sealing cap as shown in the following figure. To ensure water resistance, attach the rubber washer in the specified location.

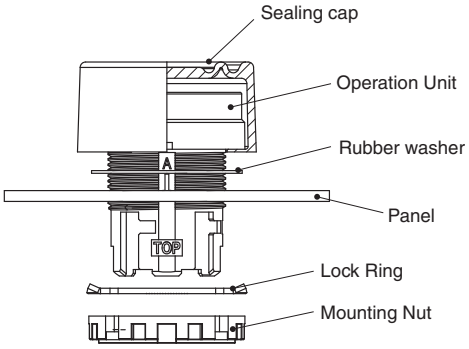

Panel Hole of 25.5-mm Diameter

Attach the Sealing cap as shown in the following figure.
Do not use the Lock Ring, and tighten the Mounting Nut while confirming that the projecting part on the Mounting Nut is aligned with mounting hole. To ensure water resistance, attach the rubber washer in the specified location.

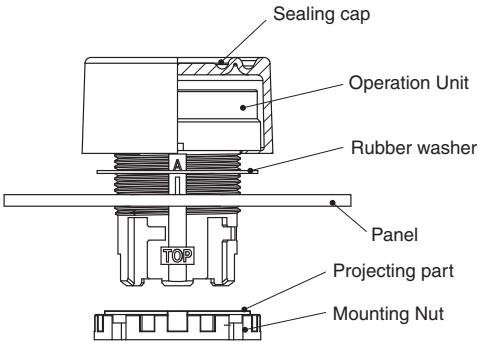

Mounting the 30-dia. Resin Attachments

<A22N>

- Acceptable panel thickness is between 1.8 and 2.2 mm.
- Mount the attachment as shown in the following figure.
- To ensure water resistance, attach the rubber washer in the specified location.

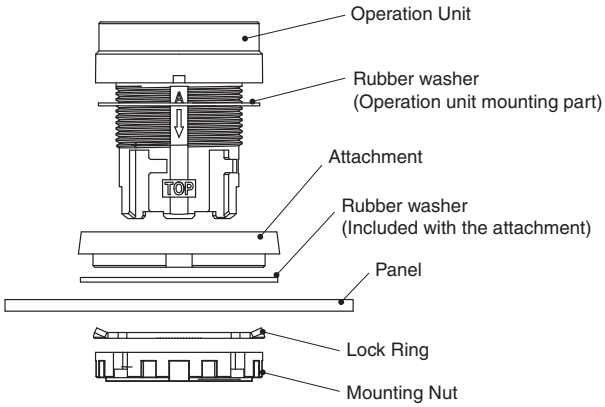

<M22N>

- Acceptable panel thickness is between 1.8 and 2.2 mm.
- Mount the attachment as shown in the following figure.
- Purchase and mount a separate lock ring (A22NZ-A-50501).
- To ensure water resistance, attach the rubber washer in the specified location.

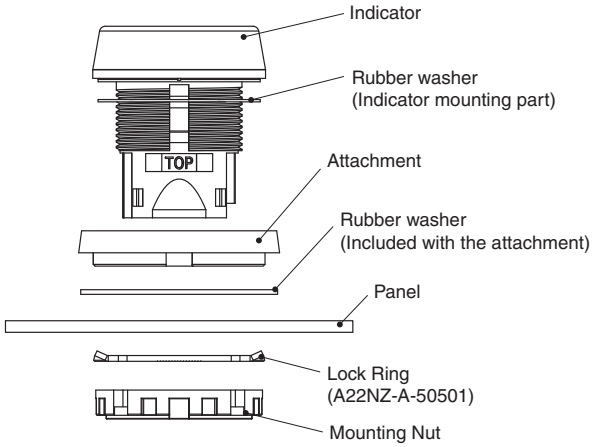

MEMO

MEMO

MEMO

Terms and Conditions Agreement

Read and understand this catalog.

Please read and understand this catalog before purchasing the products. Please consult your OMRON representative if you have any questions or comments.

Warranties.

(a) Exclusive Warranty. Omron's exclusive warranty is that the Products will be free from defects in materials and workmanship for a period of twelve months from the date of sale by Omron (or such other period expressed in writing by Omron). Omron disclaims all other warranties, express or implied.

(b) Limitations. OMRON MAKES NO WARRANTY OR REPRESENTATION, EXPRESS OR IMPLIED, ABOUT NON-INFRINGEMENT, MERCHANTABILITY OR FITNESS FOR A PARTICULAR PURPOSE OF THE PRODUCTS. BUYER ACKNOWLEDGES THAT IT ALONE HAS DETERMINED THAT THE PRODUCTS WILL SUITABLY MEET THE REQUIREMENTS OF THEIR INTENDED USE.

Omron further disclaims all warranties and responsibility of any type for claims or expenses based on infringement by the Products or otherwise of any intellectual property right. (c) Buyer Remedy. Omron's sole obligation hereunder shall be, at Omron's election, to (i) replace (in the form originally shipped with Buyer responsible for labor charges for removal or replacement thereof) the non-complying Product, (ii) repair the non-complying Product, or (iii) repay or credit Buyer an amount equal to the purchase price of the non-complying Product; provided that in no event shall Omron be responsible for warranty, repair, indemnity or any other claims or expenses regarding the Products unless Omron's analysis confirms that the Products were properly handled, stored, installed and maintained and not subject to contamination, abuse, misuse or inappropriate modification. Return of any Products by Buyer must be approved in writing by Omron before shipment. Omron Companies shall not be liable for the suitability or unsuitability or the results from the use of Products in combination with any electrical or electronic components, circuits, system assemblies or any other materials or substances or environments. Any advice, recommendations or information given orally or in writing, are not to be construed as an amendment or addition to the above warranty.

See http://www.omron.com/global/ or contact your Omron representative for published information.

Limitation on Liability; Etc.

OMRON COMPANIES SHALL NOT BE LIABLE FOR SPECIAL, INDIRECT, INCIDENTAL, OR CONSEQUENTIAL DAMAGES, LOSS OF PROFITS OR PRODUCTION OR COMMERCIAL LOSS IN ANY WAY CONNECTED WITH THE PRODUCTS, WHETHER SUCH CLAIM IS BASED IN CONTRACT, WARRANTY, NEGLIGENCE OR STRICT LIABILITY.

Further, in no event shall liability of Omron Companies exceed the individual price of the Product on which liability is asserted.

Suitability of Use.

Omron Companies shall not be responsible for conformity with any standards, codes or regulations which apply to the combination of the Product in the Buyer's application or use of the Product. At Buyer's request, Omron will provide applicable third party certification documents identifying ratings and limitations of use which apply to the Product. This information by itself is not sufficient for a complete determination of the suitability of the Product in combination with the end product, machine, system, or other application or use. Buyer shall be solely responsible for determining appropriateness of the particular Product with respect to Buyer's application, product or system. Buyer shall take application responsibility in all cases.

NEVER USE THE PRODUCT FOR AN APPLICATION INVOLVING SERIOUS RISK TO LIFE OR PROPERTY OR IN LARGE QUANTITIES WITHOUT ENSURING THAT THE SYSTEM AS A WHOLE HAS BEEN DESIGNED TO ADDRESS THE RISKS, AND THAT THE OMRON PRODUCT(S) IS PROPERLY RATED AND INSTALLED FOR THE INTENDED USE WITHIN THE OVERALL EQUIPMENT OR SYSTEM.

Programmable Products.

Omron Companies shall not be responsible for the user's programming of a programmable Product, or any consequence thereof.

Performance Data.

Data presented in Omron Company websites, catalogs and other materials is provided as a guide for the user in determining suitability and does not constitute a warranty. It may represent the result of Omron's test conditions, and the user must correlate it to actual application requirements. Actual performance is subject to the Omron's Warranty and Limitations of Liability.

Change in Specifications.

Product specifications and accessories may be changed at any time based on improvements and other reasons. It is our practice to change part numbers when published ratings or features are changed, or when significant construction changes are made. However, some specifications of the Product may be changed without any notice. When in doubt, special part numbers may be assigned to fix or establish key specifications for your application. Please consult with your Omron's representative at any time to confirm actual specifications of purchased Product.

Errors and Omissions.

Information presented by Omron Companies has been checked and is believed to be accurate; however, no responsibility is assumed for clerical, typographical or proofreading errors or omissions.

OMRON Corporation **Industrial Automation Company**
Kyoto, JAPAN

Contact: www.ia.omron.com

Regional Headquarters

OMRON EUROPE B.V.
Wegalaan 67-69, 2132 JD Hoofddorp
The Netherlands
Tel: (31)2356-81-300/Fax: (31)2356-81-388

OMRON ELECTRONICS LLC
2895 Greenspoint Parkway, Suite 200
Hoffman Estates, IL 60169 U.S.A.
Tel: (1) 847-843-7900/Fax: (1) 847-843-7787

OMRON ASIA PACIFIC PTE. LTD.
No. 438A Alexandra Road # 05-05/08 (Lobby 2),
Alexandra Technopark,
Singapore 119967
Tel: (65) 6835-3011/Fax: (65) 6835-2711

OMRON (CHINA) CO., LTD.
Room 2211, Bank of China Tower,
200 Yin Cheng Zhong Road,
PuDong New Area, Shanghai, 200120, China
Tel: (86) 21-5037-2222/Fax: (86) 21-5037-2200

Authorized Distributor:

© OMRON Corporation 2016 All Rights Reserved.
In the interest of product improvement,
specifications are subject to change without notice.

CSM_4_4_0518
Cat. No. A254-E1-01 0916(0916)