韩国韩荣部品株式会社（制造本部）
KOREAN HROPARTS ELECTRONICS CO.,LTD
ADD: Jubuk 1-ri Industrial Park, Yangji-myeon, Cheoin-gu, Yongin-si, Gyeonggi-do, South Korea
E-mail: kr@krhro.com

韩荣部品（香港）集团有限公司（营业本部）
HROPARTS（HK）GROUP LIMITED
ADD:Rm.1902,Easey Comm.Bldg.,253-261 Hennessy Road,Wanchai,Hong Kong
E-mail: hk@krhro.com

韩荣电子（厦门）有限公司（营业本部）
HRO ELECTRONICS (XIAMEN) CO.,LTD
地址: 厦门市同安区西柯镇美溪道思明工业园10号
TEL: 86-592-5898100
E-mail: xm@krhro.com

东莞市韩荣电子科技有限公司（营业本部）
DONGGUAN HRO ELECTRONICS TECHNOLOGY CO.,LTD
地址:广东省东莞市塘厦镇138工业区宏业北二横路1号
TEL: 86-769-87818100 87818200 87818300
FAX: 86-769-87818500
E-mail: dg@krhro.com

客服电话：4006338600　客服QQ:4006338600
Http://www.krhro.com

RoHS Compliant

Pb LEAD FREE

KOREAN HROPARTS ELECTRONICS CO.,LTD

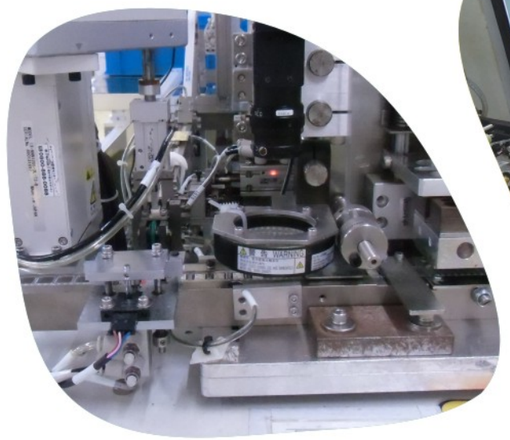

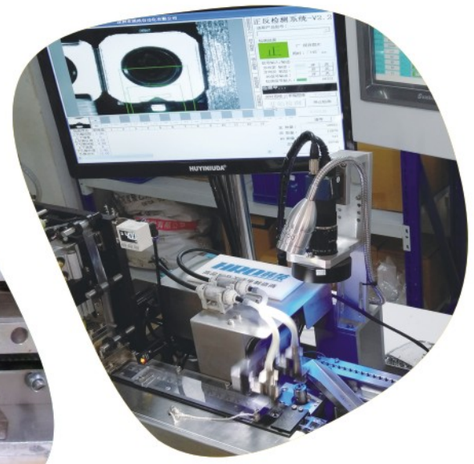

SWITCHSE JACKSE

卓越品质丨不断创新丨用心服务

http://www.krhro.com

公司简介 vvv

COMPANY PROFILE

韩国韩荣部品株式会社成立于1998年8月，于2000年6月在香港成立韩荣部品(香港)集团有限公司，2003年建立生产基地青岛中韩荣科技有限公司。经过几年的发展壮大，于2006年9月成立东莞市韩荣电子科技有限公司，主要从事开关插座的生产和销售，公司被推介为质量服务信誉AAA级企业与阿里巴巴实地认证金牌供应商及荣获最佳品质奖、最畅销品牌奖等，并获得多项产品设计专利。

秉系韩荣会社“重质量、守信誉、讲实干、多贡献"的企业精神，韩国韩荣部品株式会社紧跟国际先进技术，从事自主开发产品:多功能开关、轻触开关、检测开关、拨动开关、耳机插座、DC插座等，先进的制造设备和检测设备，以及国内外专家组成的研发与质控中心，加上高素质的员工队伍，以及科学的管理方法和ISO9001质量管理体系，确保我们以卓越的品质、良好的服务、极具竞争力的价格赢得客户的信赖！

公司现有一批现代化、懂技术、善管理的高素质管理人员，并拥有一支以多年从事开关插座研发的高素质技术队伍，从设计、开发到生产、品质出货等，都有严格的控制。对产品质量一丝不苟。技术负责人具有国际先进技术水准，具备不断创新发展现有产品技术的能力。确保公司的产品具有与世界同步的高技术水准及先进性。

本着"专业生产、规模销售、用心服务"的经营方针，公司将主要开发面向21世纪市场的高科技信息电子产品，不断推出更多的新品，形成规模，降低成本，树立全新的信息电子产品品牌，在全国范围内组建完善的销售网络和售后服务体系。

Korean Hroparts Electronics Co., Ltd. was established in August 1998, and set up the Hroparts(HK) GROUP LIMITED in June 2000 in Hong Kong and Qingdao ZHR Electronics Co., Ltd. in 2003 which is the produce base of the company. After constant development, Dongguan Hanyoung Electronics Co., Ltd. was established in September, 2006 specialized in manufacturing and selling switches and sockets.

Insisting on the enterprise spirit of on "Emphasizing in Quality, Keeping Reputation, Focusing on Practical with More Contribution", Korean Hroparts Electronics Co., Ltd. adopts the world advanced technology and is independently developing such products as: multi-functional code switch, tact switch, detector switch, snap switch. audio jack and DC jack. Currently, the company has earned high trust from clients with top quality, considerate service and competitive price due under advanced manufacturing and test equipments, R&D and quality control center with domestic and foreign experts, professional staffs, scientific management and ISO9001 Quality Management System

Currently. the company has a batch of modern and professional management staffs as well as a technical team withrich experience in switch and socket development, and every procedure from design, development to production. quality and delivery are under strict control. Our technical chief boasts world advanced technology with the ability ofconstantly innovating current products and technology for assuring advanced and world class products.

Basing on the operation outline of "Professional Production, Mass Sale and Perfect Service", the company isspecialized in developing hi-tech information electronic products for the market of the 2lst century. constantlypromote more products, form the size, drop the cost, establish a new brand in the information electronic industry, and construct complete sales network and after sale service system all around China.

韩国总部概况 vvv

KOREAN GENERAL HEADQUARTERS

MOLDS MANUFACTURING
模具制造 v v v

精密完善的模具加工体系

Precise and perfect mould processing system

公司拥有独立的模具加工车间，具备一套完整的机械加工体系，充分保障了新品开发及产品改良的进度。

We have absolutely mould machining workshop and a whole set system of exactitude machine machining,which can fully ensure the schedule of new product's exploitation and production's improved.

R&D CAPABILITY
研发能力 v v v

产品设计
Product Design

根据市场需求及行业发展方向，公司每年制定新产品开发计划，并组织专案实施，一般的ODM及IDM项目占整个开发计划的四成以上。产品研发立项后组织专案人员进行各阶段输出的评审与验证，具体包括项目需求、产品结构、模具评审、生产工艺、自动化改造与验证。公司研发的产品获得了二十多项国际和国内知识产权专利。

According to market demand and industry development direction, the company formulates new product development plans every year and organizes project implementation. General ODM and IDM projects account for more than 40% of the entire development plan. After the product research and development project is approved, the project personnel will be organized to review and verify the output of each stage, including project requirements, product structure, mold review, production process, automation transformation and verification. The products developed by the company have obtained more than 20 international and domestic intellectual property patents.

模具設計 Mould Design

长寿命、高品质、设计合理的模具是产品品质与产能保证的基石。韩荣的模具设计师们在模具结构、用料、浇道设计、加工精度控制等方面下足了功夫。

Long-life,high-quality,well-designed product quality and mold is to ensure that the cornerstone of capcity.Hanyoung mold designers in the mold structure ,the use of materials ,runnerdesign,machining accuracy control efforts.

工艺开发 Process Development

对于大批量生产的产品均进行了自动化、半自动化的生产、检测工艺改造，实在地提高了生产效率，保障了产品品质，同时控制了生产成本。

For the mass products, we make production with roboticized, half roboticized and test arts and crafts alteration,which can prove more the efficiency of the production, also ensure the quality and control the cost at the same time.

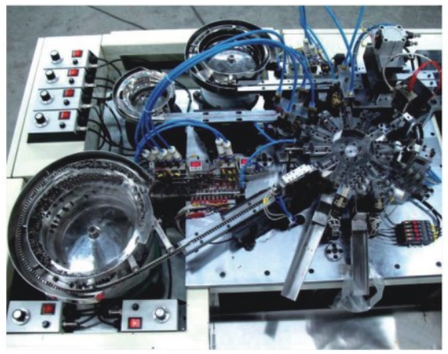

QUALITY ASSURANCE
品质保证 vvv

公司每款产品均设定了严格的品质管控体系，都经过了标准的可靠性试验及功能全检，市场满意度和品牌影响力随品质的提升而稳步增强。

我司产品从总供应链开始管控环境有毒有害物质，制程中绝不添加任何有毒有害物质，产品符合国际国内法规的要求如RoHS、REACH等。

Company products for each set of strict quality control system,have been thestandard of trust.reliability and functions of the entire seizure test,the market impactof reputation and brand sa the guality and steady enhancement.

Our products supply chain from the beginning of control of the environment oftoxic hazardous substances,the manufacturing process muxt not add any toxic andharmful substances ,producing finished products in line with the requirements of international and domestic laws and regulations such as RoHS,REACH,etc...

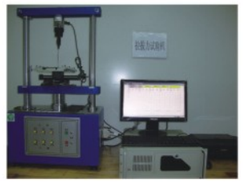

公司拥有先进的测试与试验设备，专门建有实验室，能对产品的各种耐高温低温 / 高湿、耐高压、耐盐腐蚀、耐焊、电气寿命、机械寿命等特性进行验证，同时也能对产品的手感参数、荷重行程参数、输出波形等进行分析。

The company has advanced testing and test equipment,specially built laboratory,a variety ofproducts to high temperature,low temperature,high humidity resistance,high pressure,saltcorrosion,resistance welding,weldability,impace resistance,electrical life and mechanical lifeproperties such as authentication,but also can handle the parameters of products,visit the relationshipbetween load,output waveform analysis,such as precision.

MANUFACTURING CAPACITY
制造能力 vvv

精密调整的衡压过程，稳定高效的注塑工艺，对我们满足客人高标准、高品质的要求从来都是信心十足。

High-speed precision stamping process,a stable and highly efficient injection molding process,for our guests to meet the high standards and high quality hsa always been confident.

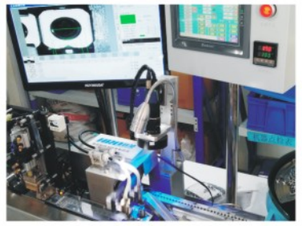

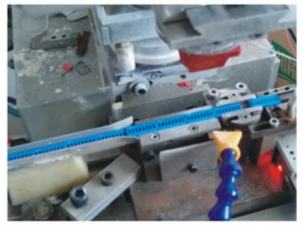

ISO05级洁净车间，自动化生产，自动化检测品质与效率的双重保障，让客户更加地信任我们，同时也大大提高了我们的市场竞争力，进入行业领先。

ISO05 class clean workshop,automa tion,automated testiong-quality and efficiency of the dual protection,to allow customers to trust us more,but also grea tly enhance our market competitiveness, and to enter the industry are listed first.

HRO韩荣®

FACILITY

设备 v v v

扭力计
Torque Gauge

示波计
Oscilloscope

IR 回焊炉
IR Reflow

单回路阻抗机
Mili Ohm Tester

六打点记录器
Multipoint Recorder

RoHS Tester
RoHS 测试机

推力计
Dial Tension Gauge

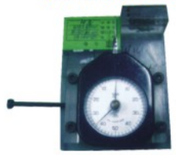

耐压绝缘测试机
IR/Withstand Voltage Tester

线切割机
Wire Cutting Machine

立体显微镜
Microscope

寿命测试机
Life Cycle Tester

电镀厚度X光测试机
X-Ray Plate Thickness Tester

投影机
Project Profile

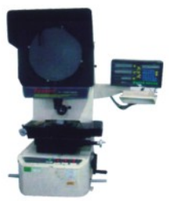

恒温恒湿试验机
Temp&Humidity Chamber

拉推力计
Force Gauge

按键荷重曲线机
Switch feeling Force Tester

显微镜
Microscope

推拉力测试机
Foce Gauge

膜厚测试机
Plating Thickness Tester

寿命测试机
Life Cycles Tester

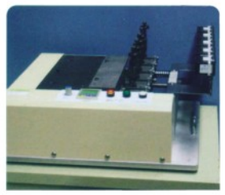

影像量测仪
3D Dimension Measuring Equip

安规寿命测试机
UL Life Tester

盐水喷雾试验机
Salt spray test machine

烤箱
Heat Oven

UV固化机
UV Oven

自动拨锡焊锡机
Solder Pot

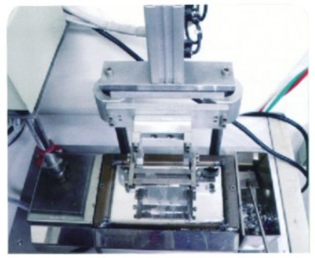

料带包装机
Taping and Reeling Machine

射出成型机
Plastic injection

放电加工机
Electrical Discharge Machine

铣床
CNC Machine

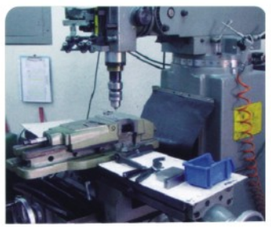

研磨加工机
Grinding Machineq

目录 CONTENT

Multi Function Switch 多功能开关

特征 Features

- 具备体积小，重量轻，多种功能。
  Small size and light weight
- 寿命长，多种操作力可选择。
  It has life and more operating forces can be a pplied such as lightly force

规格参数 Basic specfication parameter

电气特性 Electrical Characteristics	额定负荷 Rating	见具体产品规格 See detail spec
	接触阻抗 Contact Resistance	≤100mΩ
	绝缘阻抗 Insulation Resistance	≥100mΩ DC500V
	绝缘耐电压 Withstand voltage	AC500V 1Minute
	电气寿命 Electrical Life	见具体产品规格 See detail spec
机械/可靠性特性 Mechanical/reliability Characteristics	操作力 Operating force range	见具体产品规格 See detail spec
	机械寿命 Mechanical Life	见具体产品规格 See detail spec
	使用温度 Operating temperature range	-25°C+80°C
	使用湿度 Ambient humidity used	≤85%RH
	可焊性 Solder ability	245°C ± 5°C 3S ± 0.5S
	耐焊接热 Withstand Soldering temperature	260°C ± 5°C 3S ± 1S

焊接条件 Welding conditions

- 手工焊 Hand soldering
  使用30瓦烙铁，烙铁尖端温度不超过350°C，焊接时间3S。
  Use a soldering iron of 30 watts, Controlled at 350°C approximately 3 seconds while solder applying
- 波峰焊/回流焊Wave soldering/Reflow Soldering
  峰值温度不超过260℃，焊接时间不超过5S（焊接温度曲线参考如下）。
  The peak temperature of the wave oven should be set to 260°C max.Condition for soldering Temperature Profile

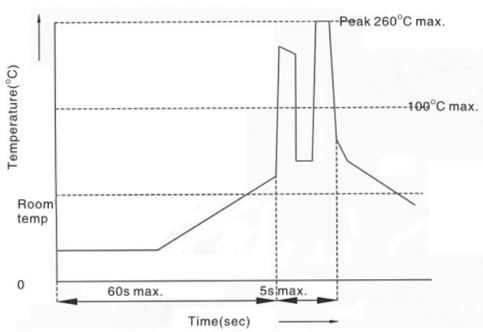

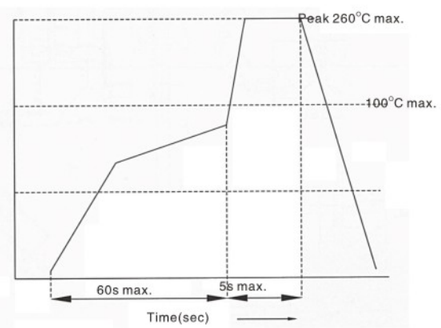

用途 Applications

- 广泛应用于鼠标、手机、照相机、录相机、立体声耳机、汽车音响设备，个人数字产品等领域。
  They can operate all types of computer mouse,Mobile phones,cameras,VCR,stereo and car radio equipment and PDAs

外型图 Dimensions

K1-1202UA-01

H	PART NO.
4.5	K1-1202UA-01
5.0	K1-1202UA-02

Rating:	50mA 12V DC
Operating force:	4-direction 160±35gf center push250±35gf
Travel:	4-direction 0.25±0.1mm center push0.15±0.1mm
Lifetime:	100,000Cycles

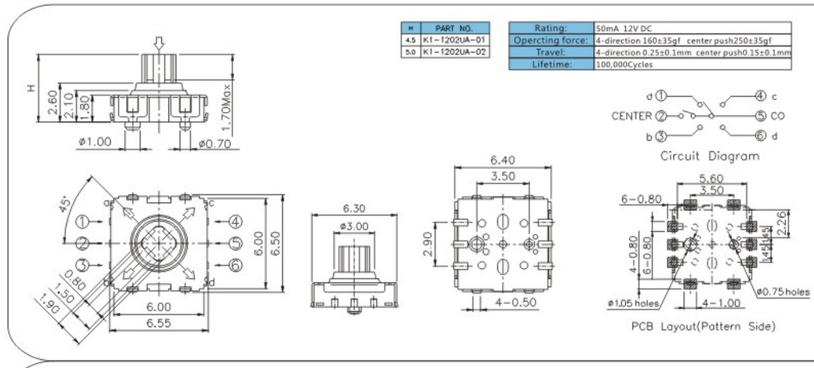

K1-1203UA-01

Rating:	50mA 12V DC
Operating force:	500±50gf
Travel:	15 pulses 0.3mm±0.1mm
Lifetime:	20,000Cycles

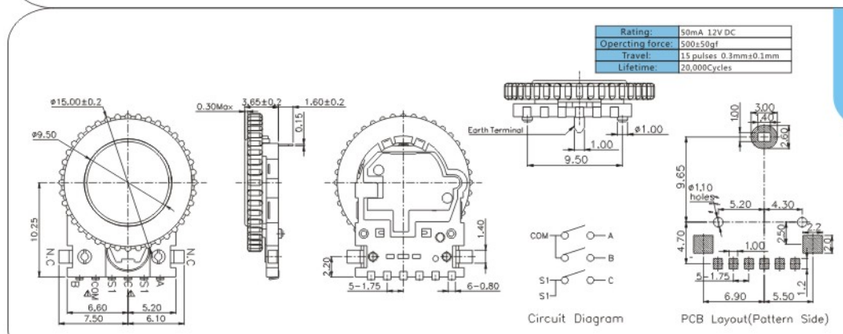

K1-1210UN-01

Rating:	100mA 12V DC
Operating force:	180±35gf
Lifetime:	50,000Cycles

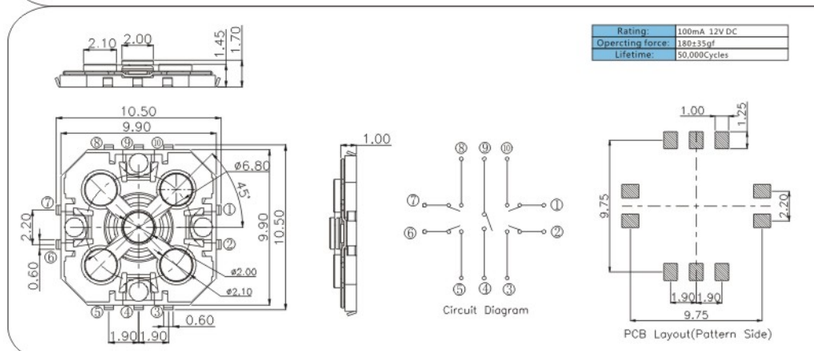

K1-1501SA-01

Rating:	10mA 5V DC
Operating force:	Lever portion 70±40gf push portion200±40gf
Travel:	4direction -25° -0° 4+25° pushportion 0.85±0.1mm
Lifetime:	100,000Cycles

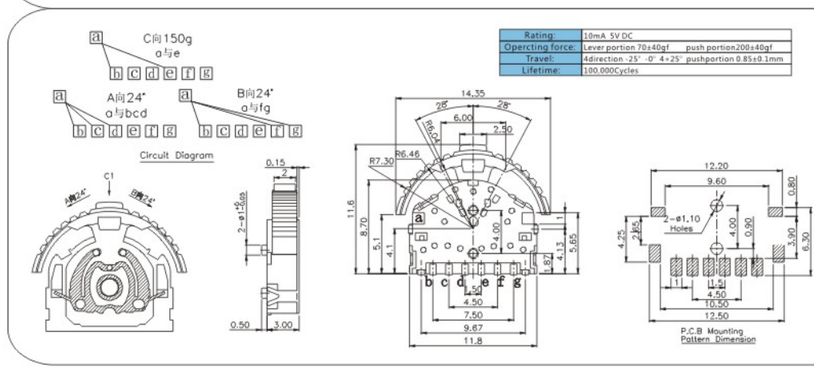

K1-1501SA-02

Rating:	10mA 5V DC
Operating force:	Lever portion 70±40gf push portion200±40gf
Travel:	direction -25° -0° +25° pushportion 0.85±0.15mm
Lifetime:	100,000Cycles

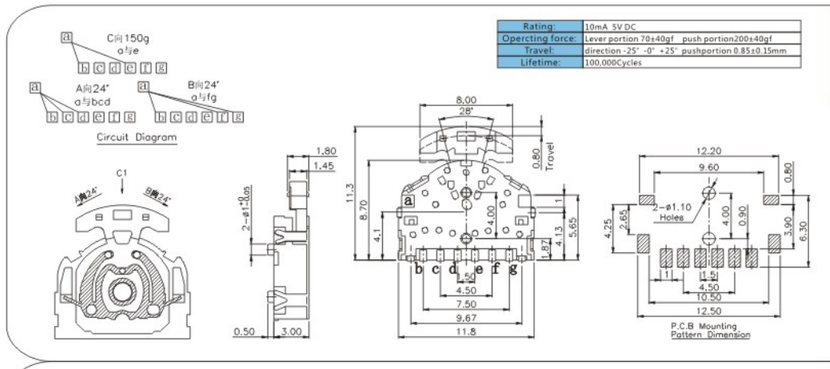

K1-1502SA-01

Rating:	10mA 5V DC
Operating force:	Lever portion 70±40gf push portion200±40gf
Travel:	direction -25° -0° +25° pushportion 0.90±0.1mm
Lifetime:	100,000Cycles

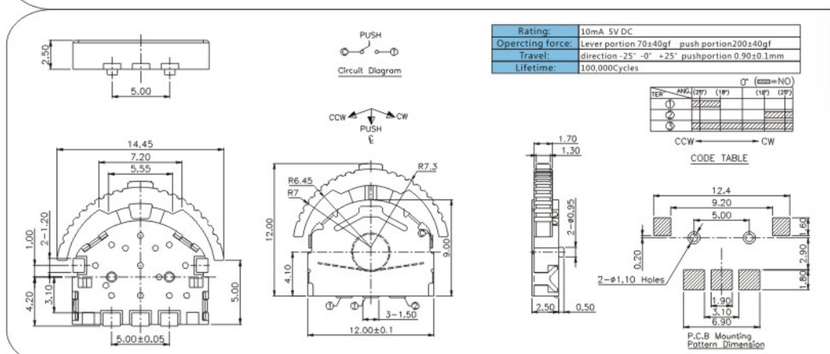

K1-1502SA-02

Rating:	10mA 5V DC
Operating force:	Lever portion 70±40gf push portion200±40gf
Travel:	direction -25° -0° +25° pushportion 0.90±0.1mm
Lifetime:	100,000Cycles

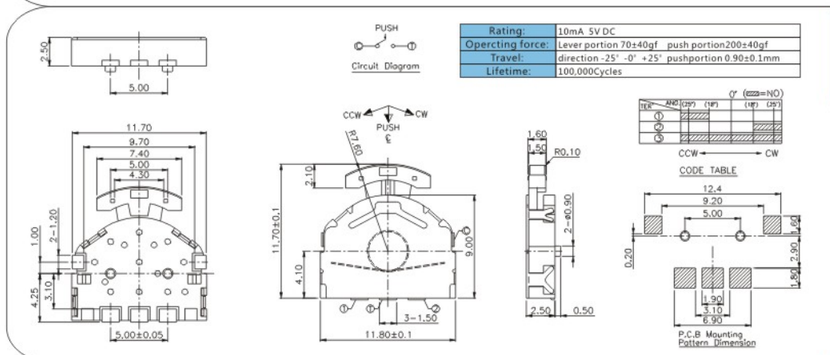

K1-1502SA-03

Rating:	10mA 5V DC
Operating force:	Lever portion 80±50gf push portion205±50gf
Travel:	direction -25° -0° +25° pushportion 0.90±0.1mm
Lifetime:	100,000Cycles

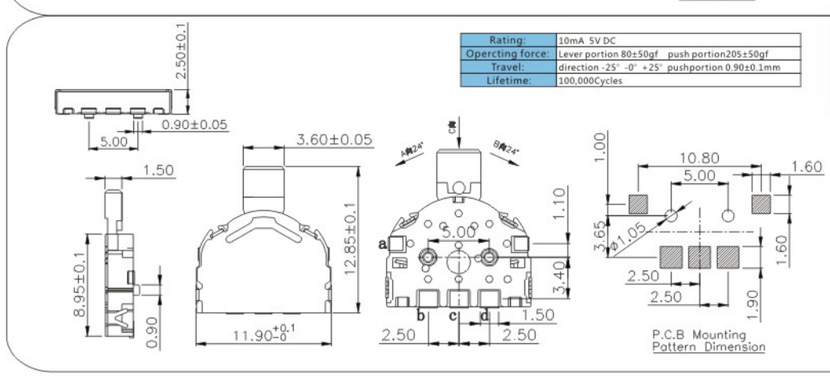

外型图 Dimensions

K1-1502SA-04

Rating:	10mA 5V DC
Operating force:	Lever portion 80±50gf push portion 205±80gf
Travel:	direction -24°-0°+24° pushportion 0.85±0.15mm
Lifetime:	100,000Cycles

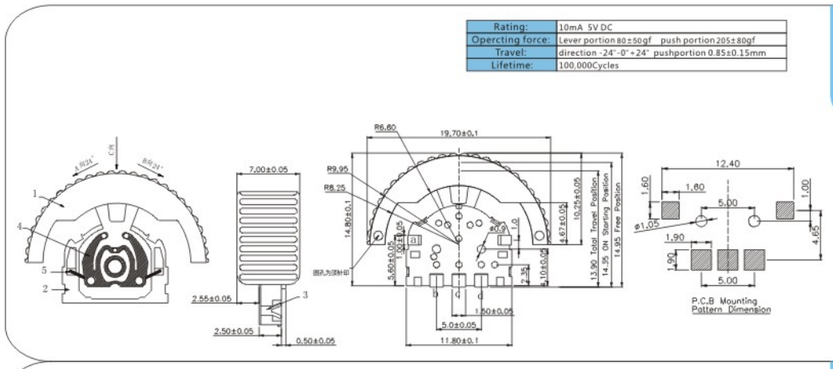

K1-1503SA-03

Rating:	DC 5V 10mA
Operating force:	lever portion 2-80±50gf push portion 200±50gf
Travel:	0.8±0.2mm
Lifetime:	100,000 cycles

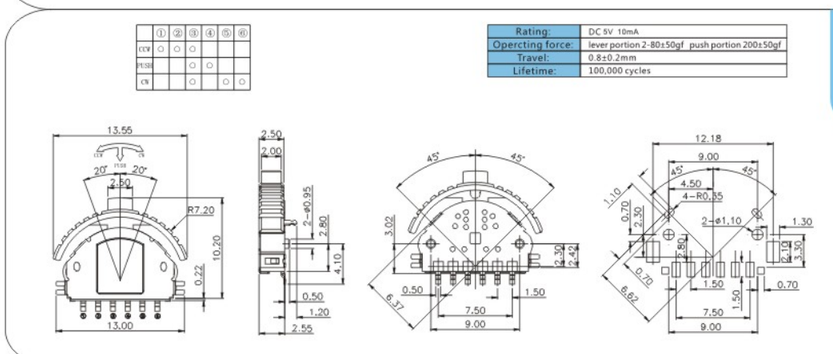

K1-1504SA-03

Rating:	50mA 12V DC
Operating force:	4-direction 250±80gf center push250±80gf
Travel:	4-direction 4°±2° center push0.20±0.1mm
Lifetime:	100,000Cycles

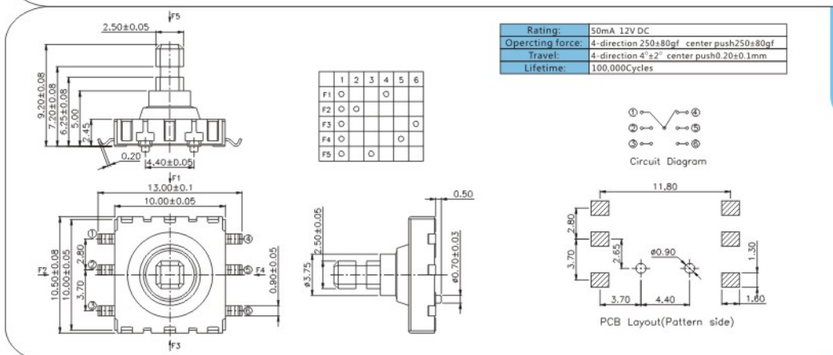

K1-1504SA-06

Rating:	50mA 12V DC
Operating force:	4-direction 250±80gf center push250±80gf
Travel:	4-direction 4°±2° center push0.20±0.1mm
Lifetime:	100,000Cycles

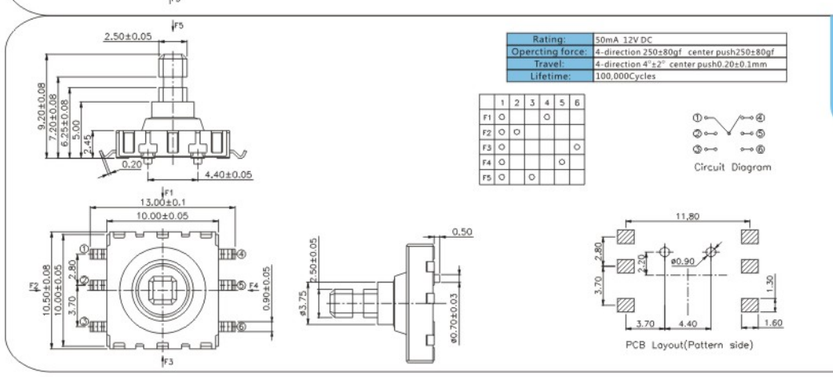

K1-1505UA-01

Rating:	50mA 12V DC
Opercting force:	4-direction 140±50gf center push220±80gf
Travel:	4-direction 5°±2° center push0.20±0.1mm
Lifetime:	50,000Cycles

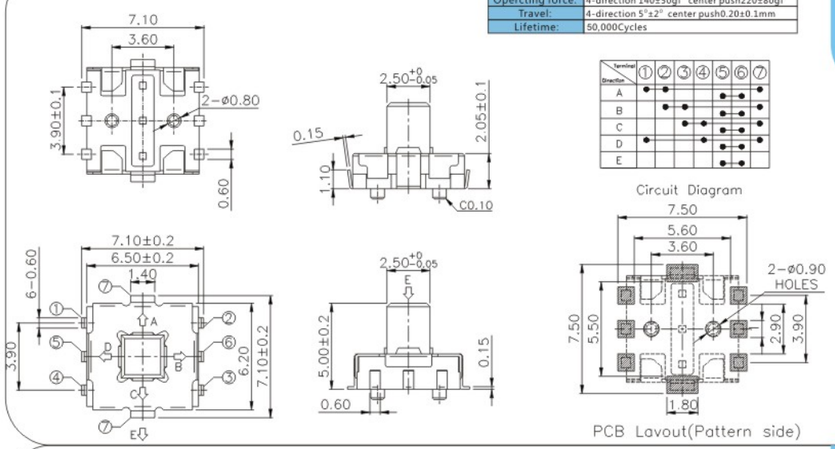

K1-1506DN-01

Rating:	50mA 12V DC
Opercting force:	4-direction 160±35gf center push300±35gf
Travel:	4-direction 5°±2° center push0.20±0.1mm
Lifetime:	100,000Cycles

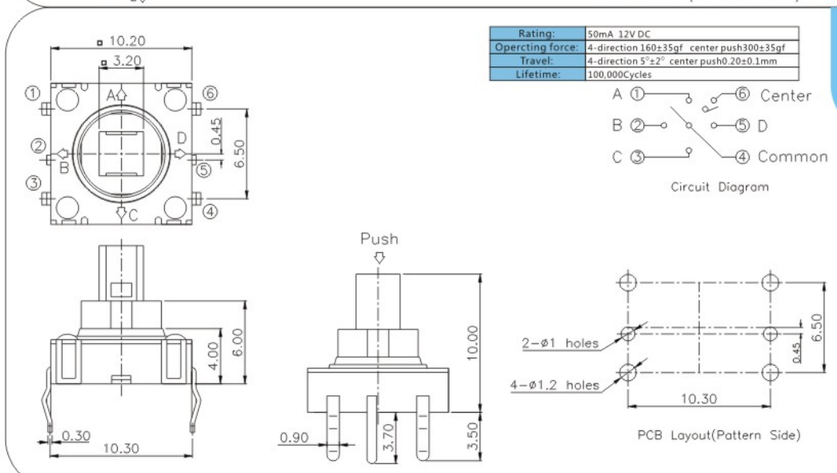

K1-1506SN-01

Rating:	50mA 12V DC
Opercting force:	4-direction 160±35gf center push300±35gf
Travel:	4-direction 5°±2° center push0.20±0.1mm
Lifetime:	100,000Cycles

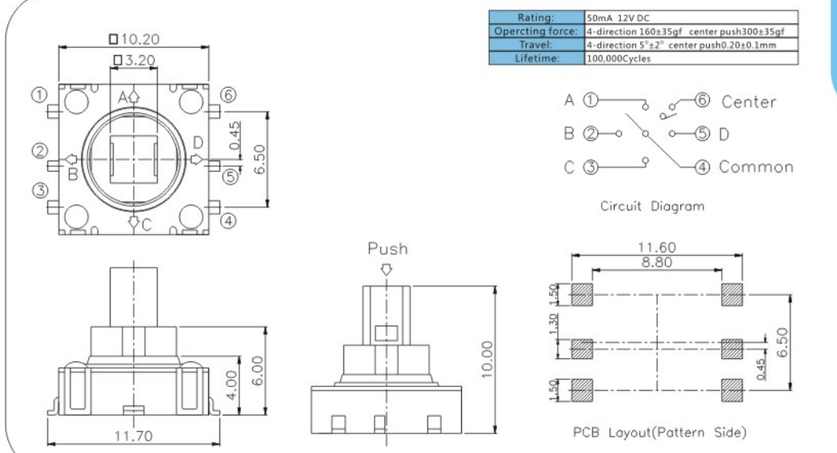

外型图 Dimensions

K1-1507SA-02

Rating:	50mA 12V DC
Opercting force:	4-direction 180±50gf center push250±50gf
Travel:	4-direction 4°±2° center push0.20±0.1mm
Lifetime:	100,000Cycles

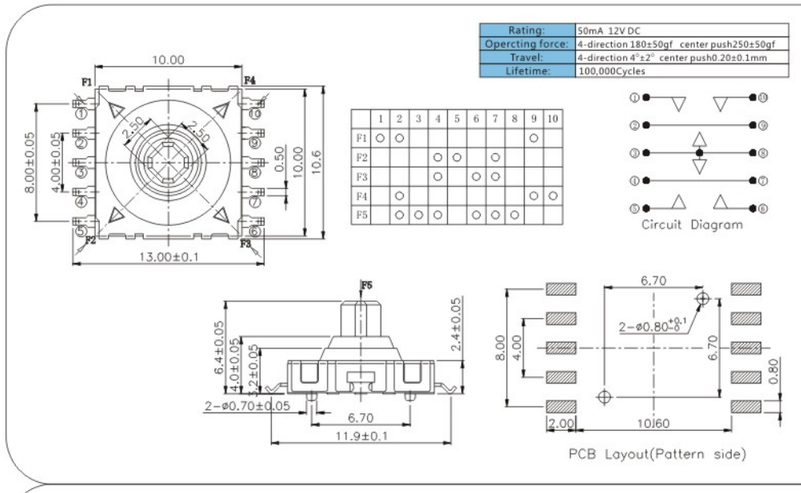

K1-1507SA-03

Rating:	50mA 12V DC
Opercting force:	4-direction 180±50gf center push250±50gf
Travel:	4-direction 4°±2° center push0.20±0.1mm
Lifetime:	100,000Cycles

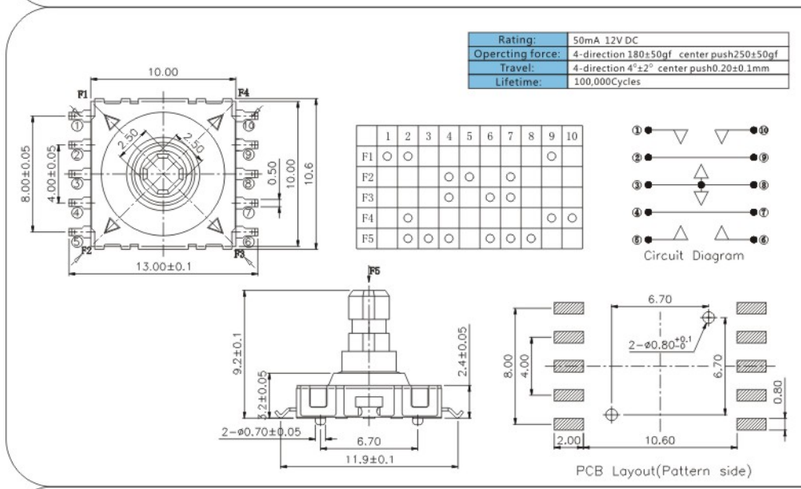

K1-1508SA-01

Rating:	10mA 5V DC
Opercting force:	Lever portion 100±30gf push portion205±50gf
Travel:	direction-20° -0° +20° push portion0.70±0.1mm
Lifetime:	100,000Cycles

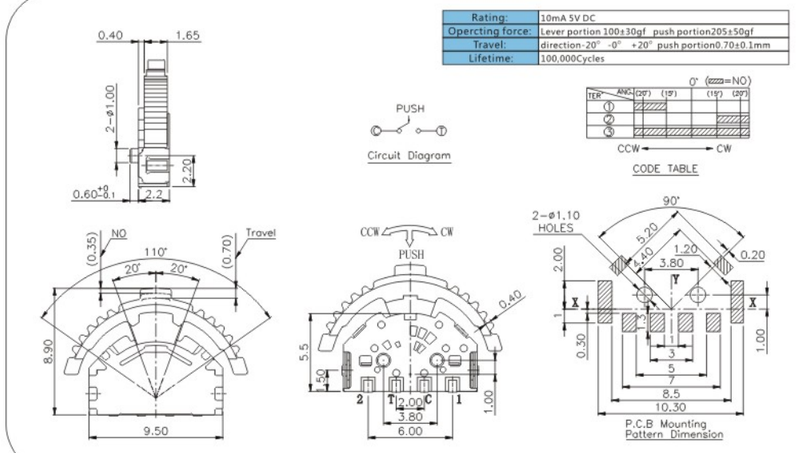

K1-1508SA-02

Rating:	10mA 5V DC
Opercting force:	Lever portion 100±30gf push portion205±50gf
Travel:	direction-20° -0° +20° push portion0.70±0.1mm
Lifetime:	100,000Cycles

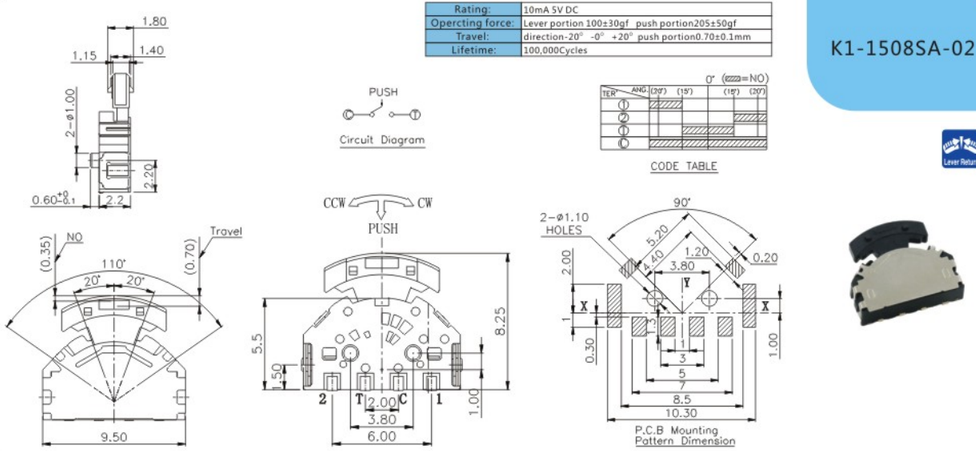

K1-1508SA-03

Rating:	10mA 5V DC
Opercting force:	Lever portion 100±30gf push portion250±50gf
Travel:	direction-20° -0° +20° push portion0.80±0.1mm
Lifetime:	100,000Cycles

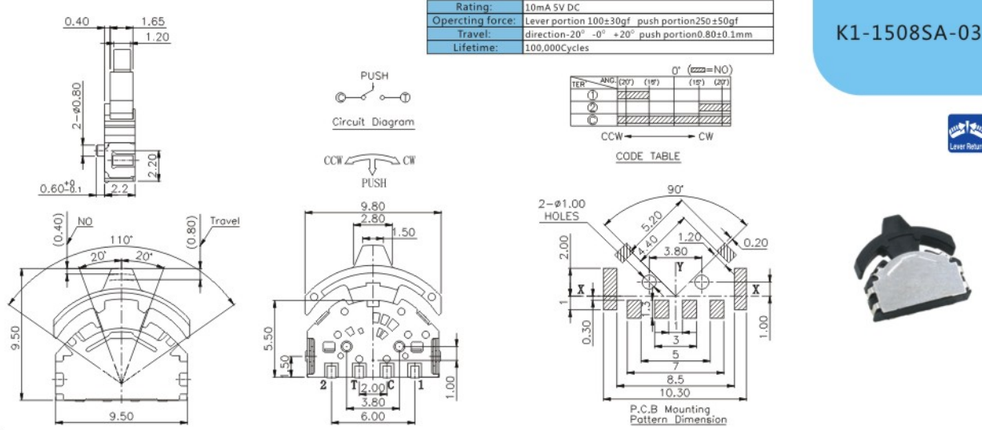

K1-1509UA-01

Rating:	50mA 12V DC
Opercting force:	4-direction 160±35gf center push250±35gf
Travel:	4-direction 0.25±0.1mm center push0.25±0.1mm
Lifetime:	100,000Cycles

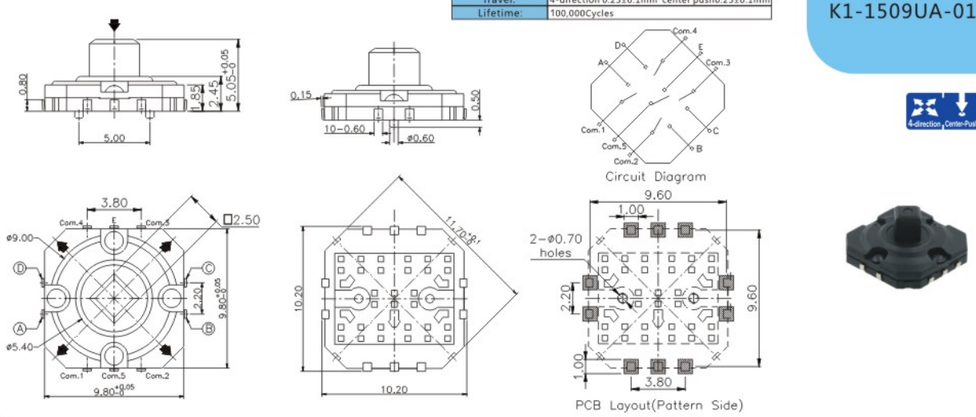

外型图 Dimensions

K1-1511SA-01

Rating:	10mA 5V DC
Opercting force:	Lever portion 70±40gf push portion250±40gf
Travel:	direction -20° -0° +20° pushportion 0.70±0.1mm
Lifetime:	100,000Cycles

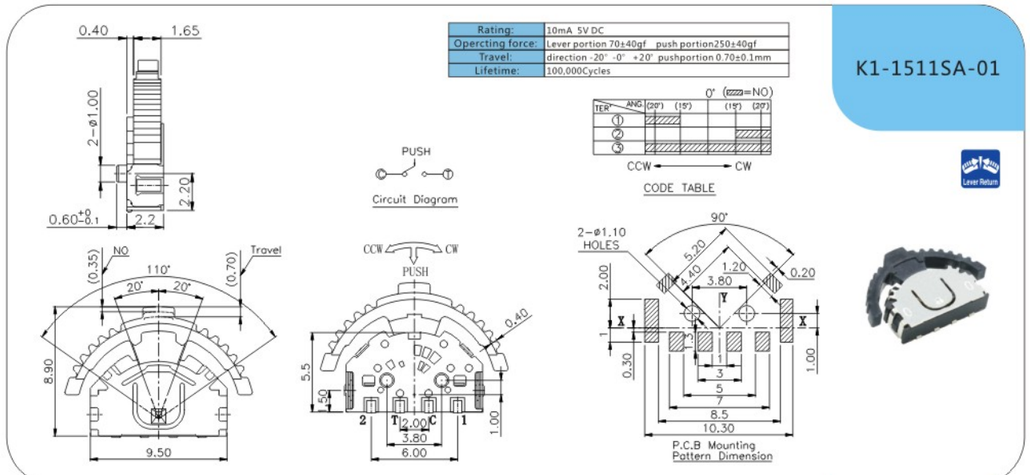

K1-1511SA-02

Rating:	10mA 5V DC
Opercting force:	Lever portion 70±40gf push portion250±40gf
Travel:	direction -20° 0° +20° pushportion 0.70±0.1mm
Lifetime:	100,000Cycles

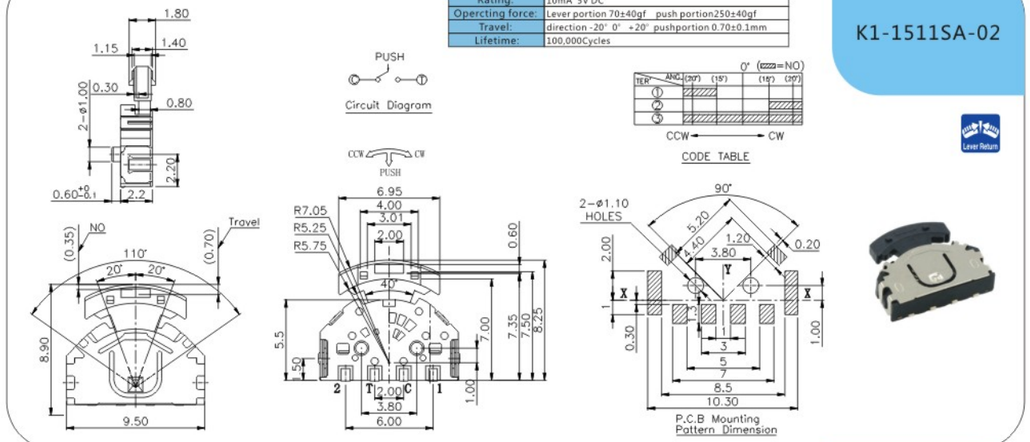

K1-1511SA-03

Rating:	DC 0.1A 12V
Opercting force:	lever portion 2-80±50gf push portion 250±50gf
Travel:	0.8±0.2mm
Lifetime:	100,000 cycles

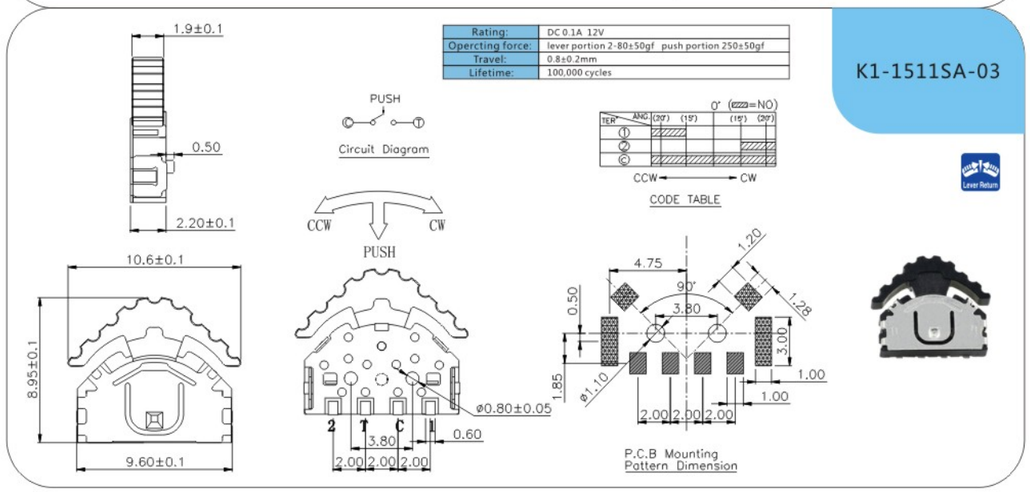

K1-1513SN-01

Rating:	50mA 12V DC
Operating force:	4-direction 160±35gf center push250±35gf
Travel:	4-direction 0.25±0.1mm center push0.25±0.1mm
Lifetime:	100,000Cycles

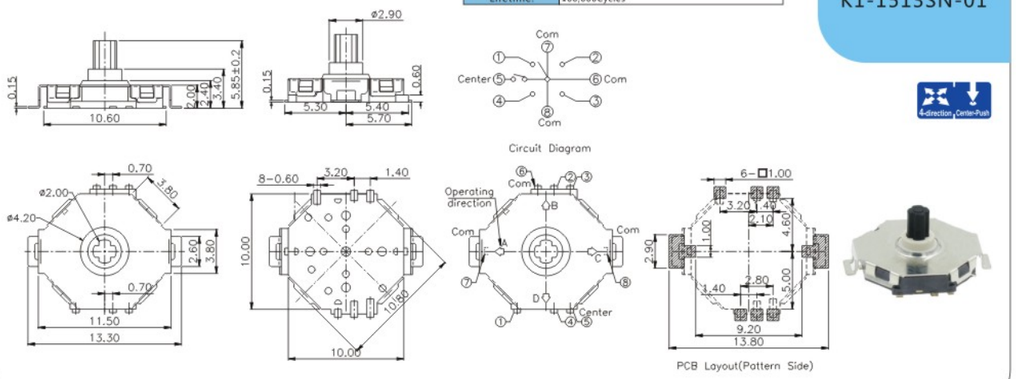

K1-1519SA-01

Rating:	10mA 5V DC
Operating force:	Lever portion 100±30gf push portion205±50gf
Travel:	direction-20° -0° +20° push portion0.70±0.1mm
Lifetime:	100,000Cycles

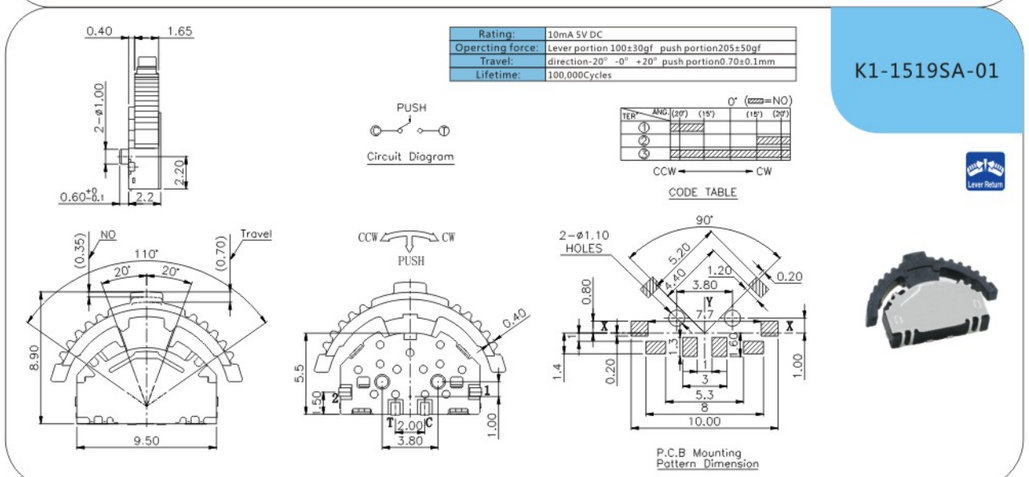

K1-1519SA-02

Rating:	10mA 5V DC
Operating force:	Lever portion 100±30gf push portion205±50gf
Travel:	direction-20° -0° +20° push portion0.70±0.1mm
Lifetime:	100,000Cycles

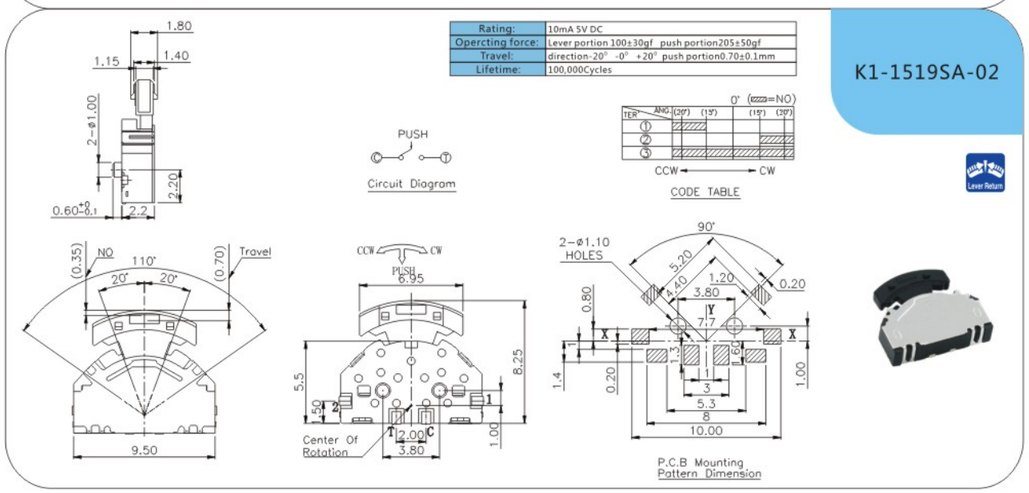

外型图 Dimensions

K1-1519SA-03

Rating:	DC 0.1A 12V
Operating force:	lever portion 2-80±50gf push portion 250±50gf
Travel:	0.8±0.2mm
Lifetime:	10,000 cycles

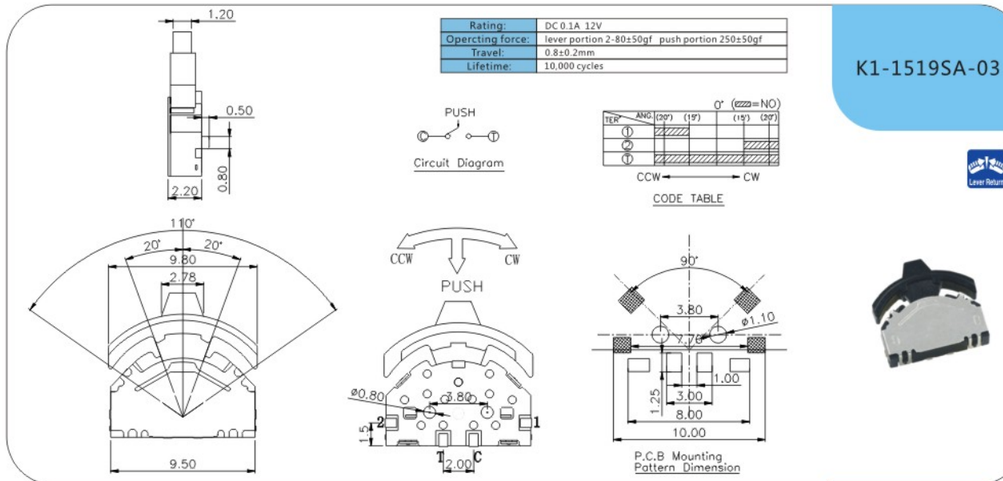

K1-1521DA-02

MODEL	L	I	Operating Force
K1-1521DA-01	7.7mm	2.5mm	100±50gf
K1-1521DA-02	9.8mm	4.1mm	
K1-1521DA-03	7.7mm	2.5mm	200±60gf
K1-1521DA-04	9.8mm	4.1mm	

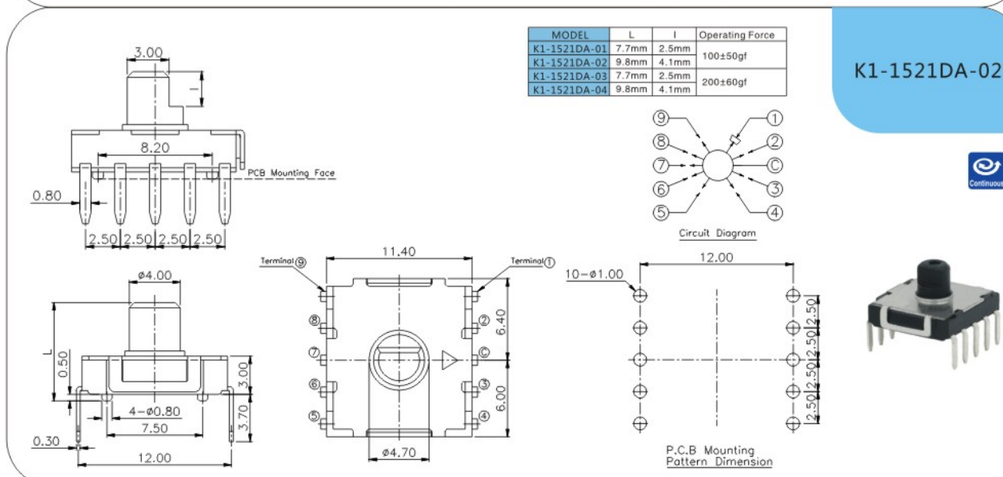

K1-1532SA-01

Rating:	10mA 30V DC
Operating force:	180±50gf
Lifetime:	50,000Cycles

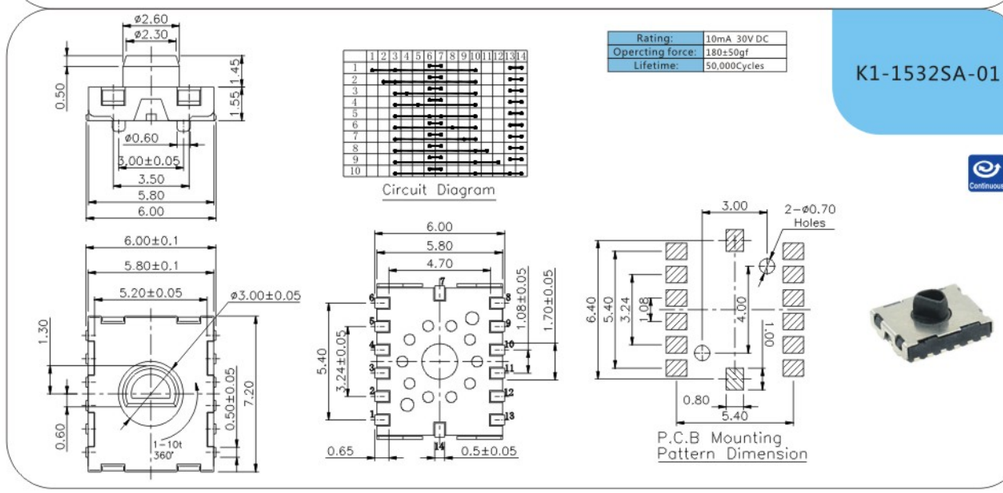

K1-1535DA-04

PAPT NO	Height
K1-1535DA-01	7
K1-1535DA-02	8
K1-1535DA-03	9
K1-1535DA-04	10
K1-1535DA-05	11

Rating:	50mA 12V DC
Operating force:	4-direction 250±70gf center push250±70gf
Travel:	4-direction 5°±2° center push0.25±0.1mm
Lifetime:	100,000Cycles

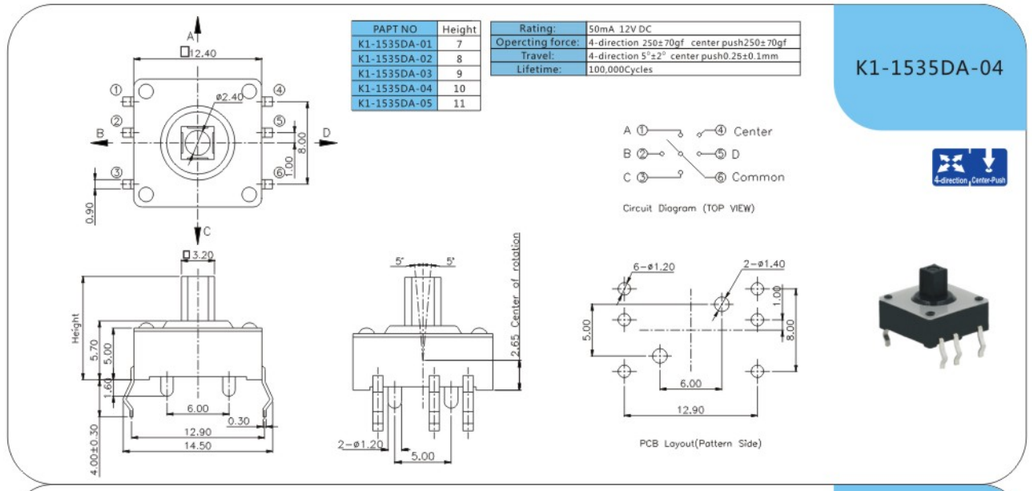

K1-1537SA-01

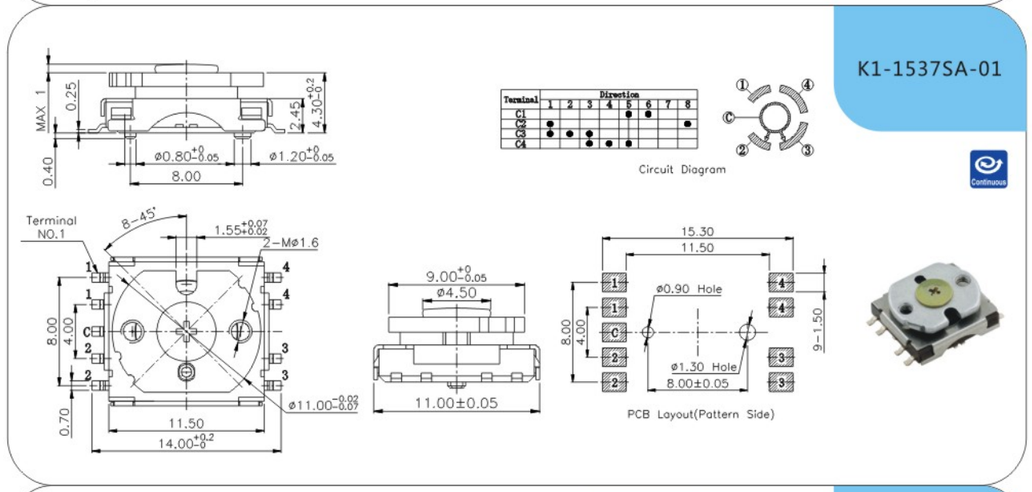

K1-1539DA-01

Rating:	DC 5V 100mA
Operating force:	50gf~180gf max
Lifetime:	100,000Cycles

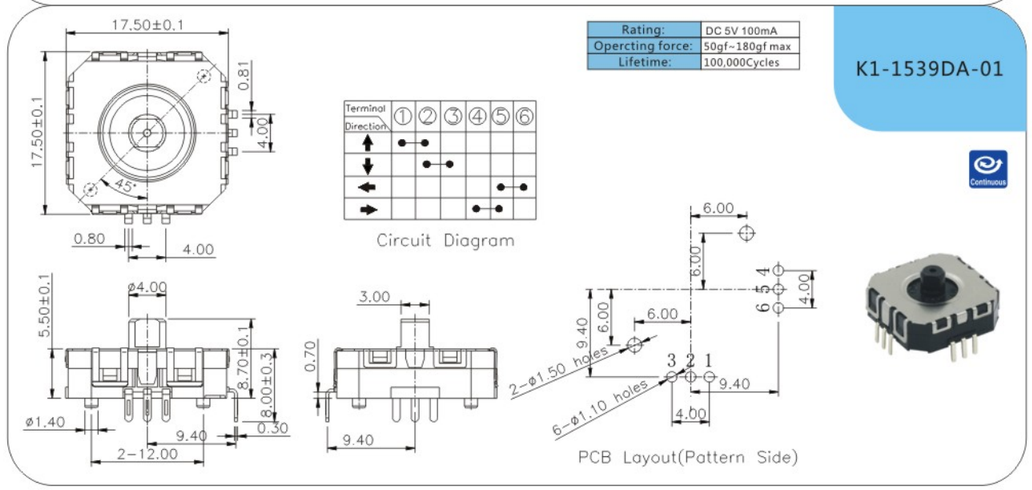

外型图 Dimensions

K1-1539SA-01

Rating:	DC 5V 100mA
Operating force:	50gf~180gf max
Lifetime:	100,000Cycles

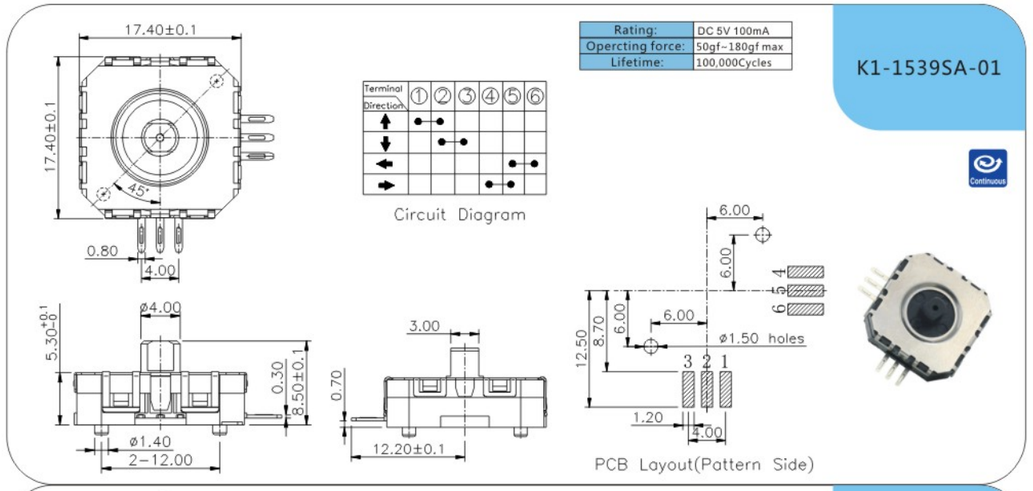

K1-5202UA-01

PART NO.	H
K1-5202UA-01	5.0
K1-5202UA-02	6.0

Rating:	50mA 12V DC
Operating force:	4-direction 170±35gf center push250±35gf
Travel:	4-direction 0.40±0.2mm center push0.15±0.1mm
Lifetime:	100,000Cycles

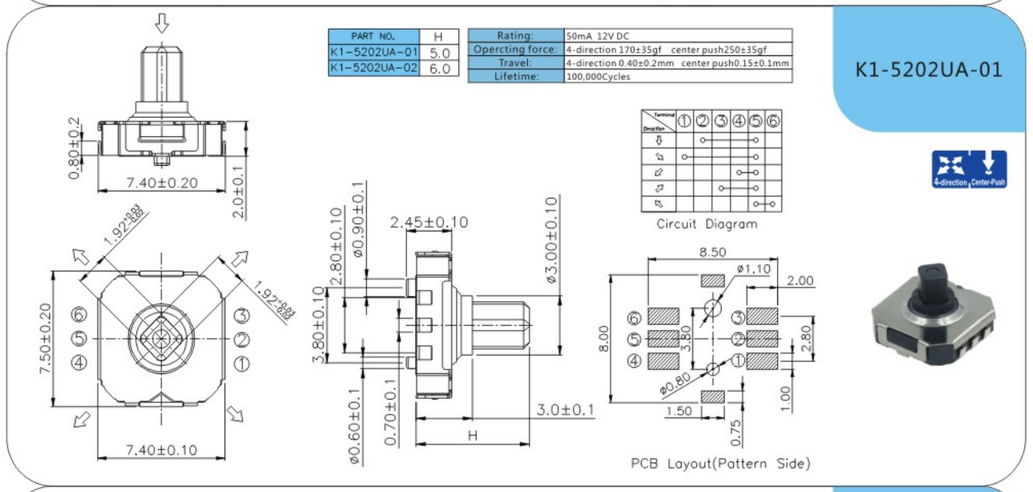

K1-5203UA-01

Rating:	100mA 12V DC
Operating force:	4-direction 170±35gf center push250±35gf
Travel:	4-direction 5°±2°mm center push0.2±0.1mm
Lifetime:	200,000Cycles

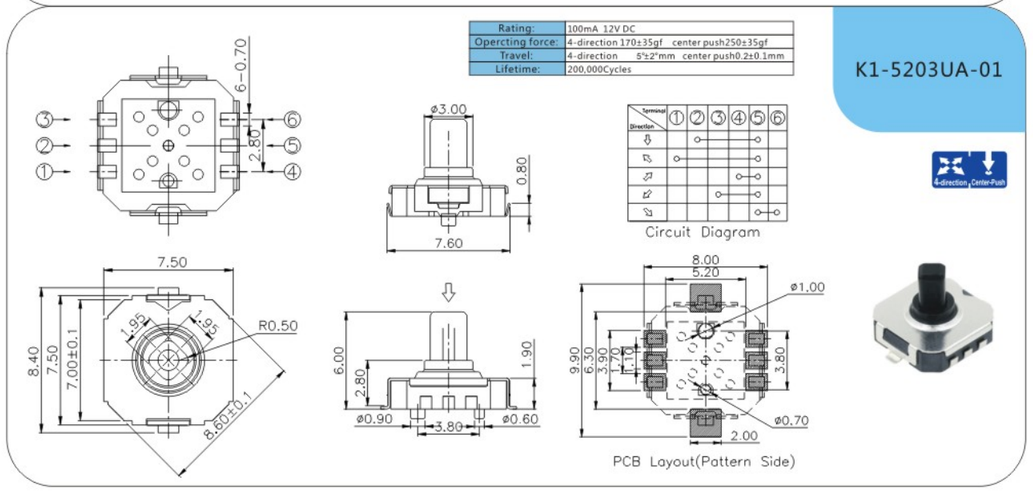

Multi Function Switch 多功能开关

K1-5301UA-01

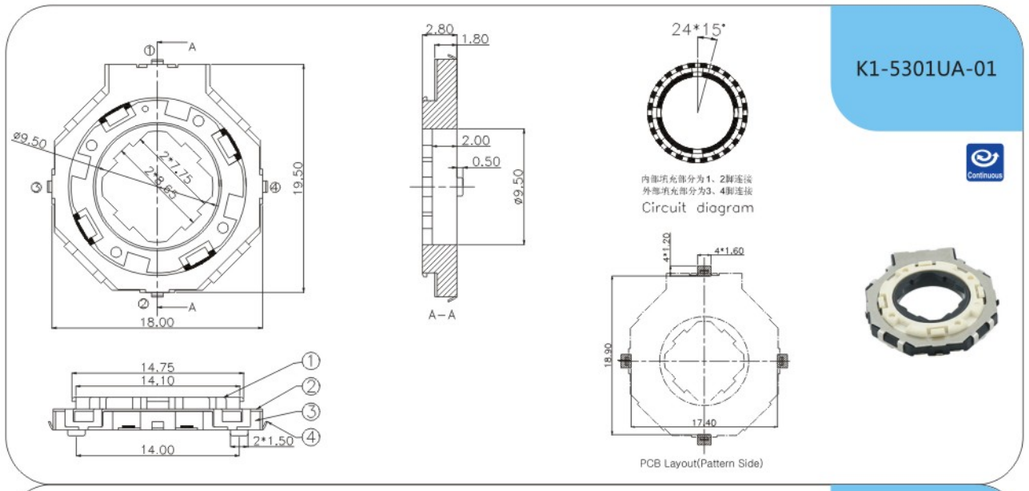

3D161

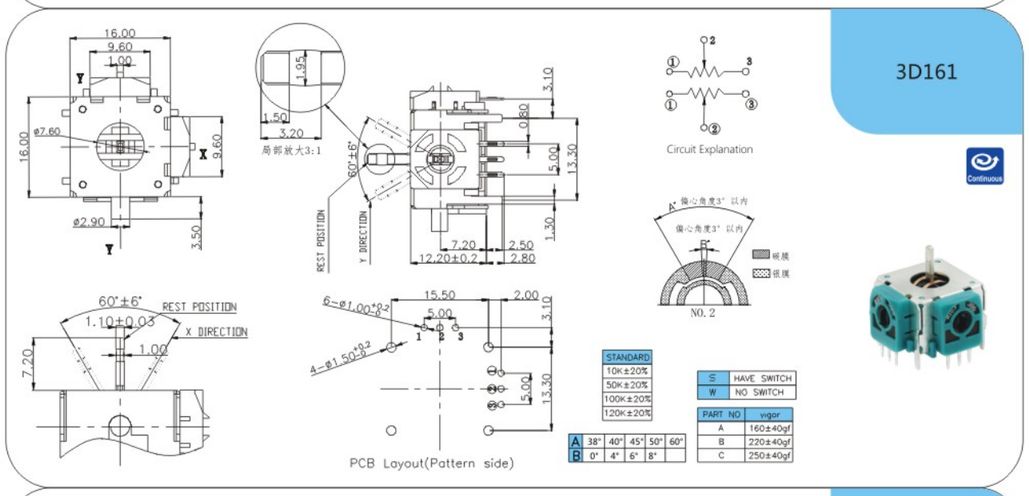

STANDARD
10K±20%
50K±20%
100K±20%
120K±20%

A	38°	40°	45°	50°	60°
B	0°	4°	6°	8°	

S	HAVE SWITCH
W	NO SWITCH

PART NO	vigor
A	160±40gf
B	220±40gf
C	250±40gf

3D162

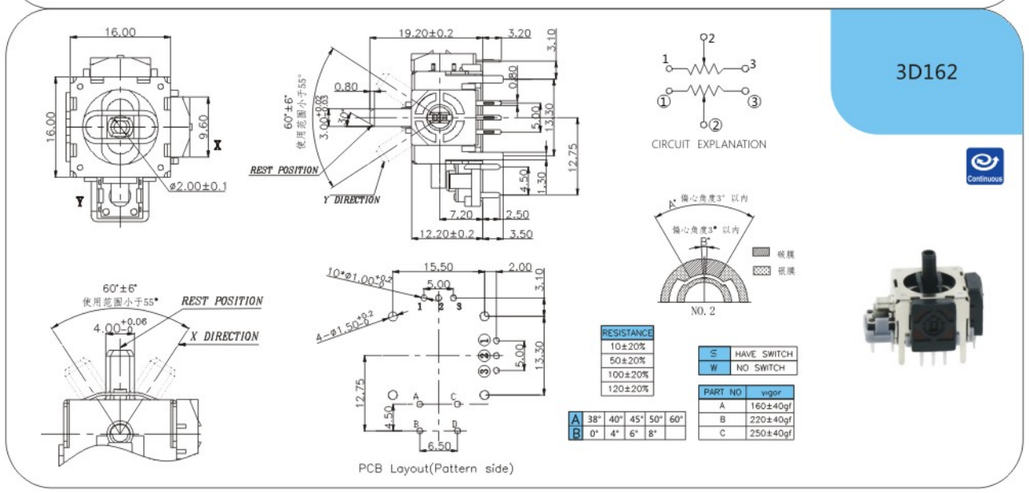

RESISTANCE
10±20%
50±20%
100±20%
120±20%

A	38°	40°	45°	50°	60°
B	0°	4°	6°	8°	

S	HAVE SWITCH
W	NO SWITCH

PART NO	vigor
A	160±40gf
B	220±40gf
C	250±40gf

轻触开关 >>
Tact Switch

特征 Features

- 体积小而操作力轻。
  Micro-Miniature,light operating
- 具备轻快的按触感和高耐久性。
  It has life good feeling and long life
- 开关具备固定架设计，可直接进行PCB安装，且利于静电释放，屏蔽效果好。
  Snap-in type,can be mounted directly on P.C.Board and good for electrostatic discharge
- 按键外形和高度有多种选择，利于整机其它配件设计
  It has a lot of choices for button shape and height and it is easil to install andy kind of product

规格参数 Basic specfication parameter

电气特性 Electrical Characteristics	额定负荷 Rating	见具体产品规格 See detail spec
	接触阻抗 Contact Resistance	≤100mΩ
	绝缘阻抗 Insulation Resistance	≥100mΩ DC250V
	绝缘耐电压 Withstand voltage	AC500V 1Minute
	电气寿命 Electrical Life	见具体产品规格 See detail spec
机械/可靠性特性 Mechanical/reliability Characteristics	操作力 Operating force range	见具体产品规格 See detail spec
	机械寿命 Mechanical Life	见具体产品规格 See detail spec
	使用温度 Operating temperature range	-25°C+80°C
	使用湿度 Ambient humidity used	≤85%RH
	可焊性 Solder ability	245°C ± 5°C 3S
	耐焊接热 Withstand Soldering temperature	260°C ± 5°C 3S

焊接条件 Welding conditions

- 手工焊 Hand soldering
  使用30瓦烙铁，烙铁尖端温度不超过350℃，焊接时间3S。
  Use a soldering iron of 30 watts, Controlled at 350°C approximately 3 seconds while solder applying
- 波峰焊/回流焊Wave soldering/Reflow Soldering
  峰值温度不超过260℃，焊接时间不超过5S（焊接温度曲线参考如下）。
  The peak temperature of the wave oven should be set to 260°C max.Condition for soldering Temperature Profile

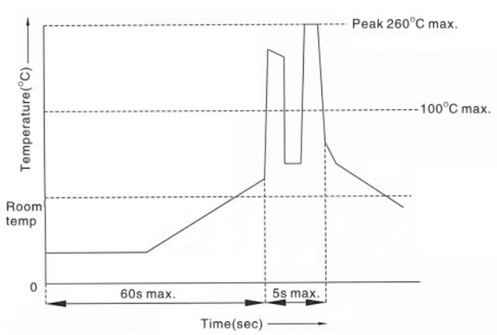

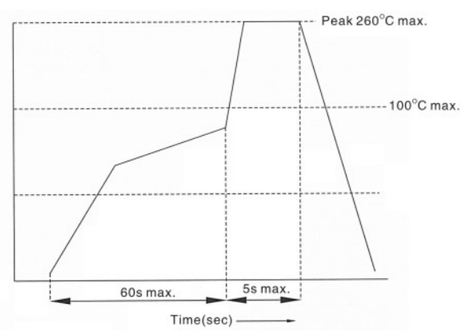

外型图 Dimensions

K2-1101UT

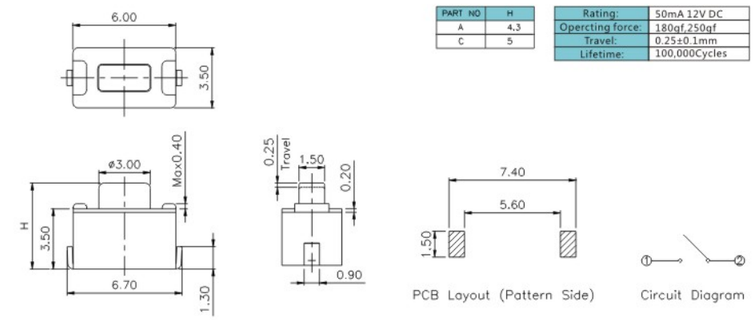

PART NO	H
A	4.3
C	5

Rating:	50mA 12V DC
Operating force:	180gf,250gf
Travel:	0.25±0.1mm
Lifetime:	100,000Cycles

K2-1101DT

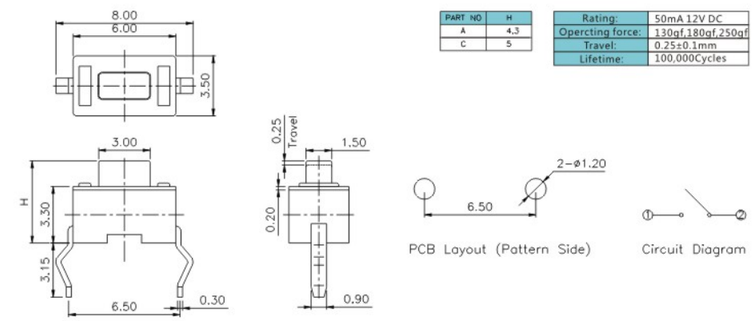

PART NO	H
A	4.3
C	5

Rating:	50mA 12V DC
Operating force:	130gf,180gf,250gf
Travel:	0.25±0.1mm
Lifetime:	100,000Cycles

K2-1101DF

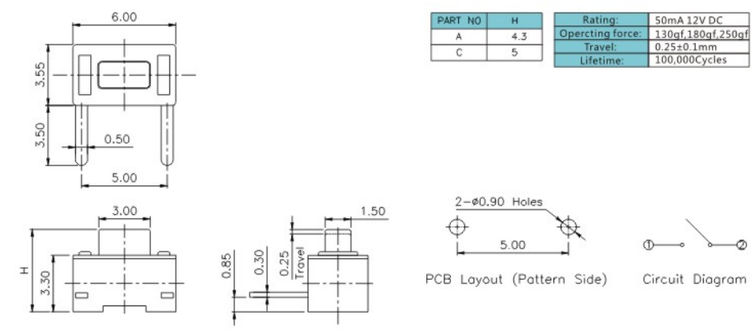

PART NO	H
A	4.3
C	5

Rating:	50mA 12V DC
Operating force:	130gf,180gf,250gf
Travel:	0.25±0.1mm
Lifetime:	100,000Cycles

K2-1101DQ

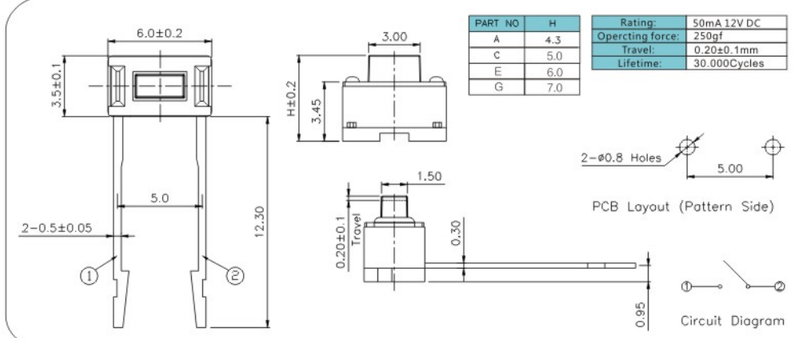

PART NO	H
A	4.3
C	5.0
E	6.0
G	7.0

Rating:	50mA 12V DC
Operating force:	250gf
Travel:	0.20±0.1mm
Lifetime:	30.000Cycles

K2-1101AT

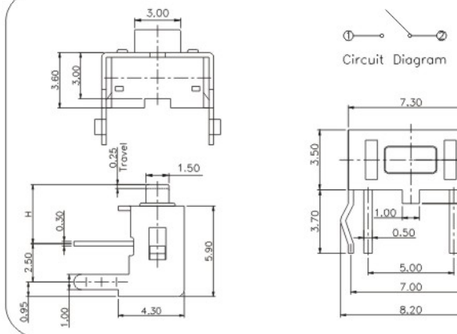

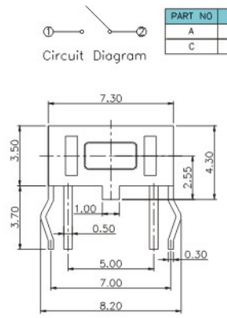

Circuit Diagram

PART NO	H
A	3.15
C	3.85

Rating:	50mA 12V DC
Operating force:	100gf,180gf,250gf
Travel:	0.25±0.1mm
Lifetime:	100,000Cycles

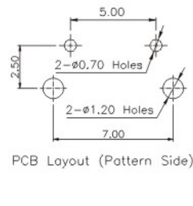

PCB Layout (Pattern Side)

K2-1101ST

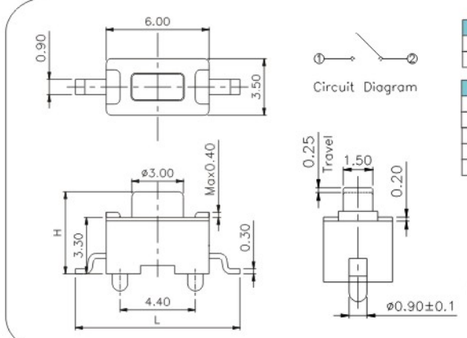

Circuit Diagram

PART NO	H
A	4.3
C	5.0

Rating:	50mA 12V DC
Operating force:	180gf,250gf
Travel:	0.25±0.1mm
Lifetime:	100,000Cycles

PART NO	L	L1
A	8	10
B	8.5	11
C	9	11
D	9.5	12
E	10	12

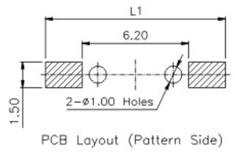

PCB Layout (Pattern Side)

PART NO
K2-1101SA
K2-1101ST

K2-1101SP

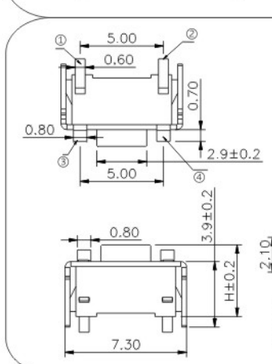

Circuit Diagram

PART NO	H
A	4.3
B	4.5
C	5.0
E	6.0
G	7.0
I	8.0

Rating:	50mA 12V DC
Operating force:	160gf
Travel:	0.20±0.1mm
Lifetime:	50,000Cycles

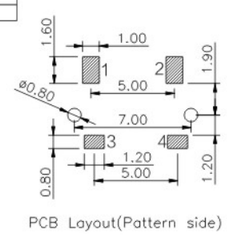

PCB Layout(Pattern side)

K2-1102AP

Circuit Diagram

PART NO	H
A	4.3
B	4.5
C	5.0
D	5.5
E	6
F	6.5
G	7
H	7.5
I	8

Rating:	50mA 12V DC
Operating force:	90gf,180gf,250gf
Travel:	0.25±0.1mm
Lifetime:	100,000Cycles

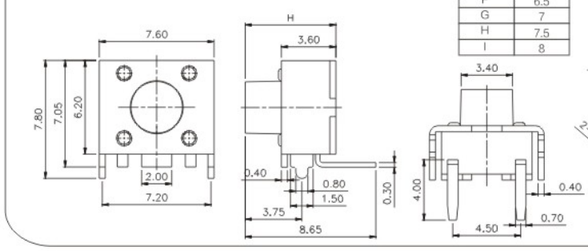

PCB Layout(Pattern side)

外型图 Dimensions

K2-1102AT

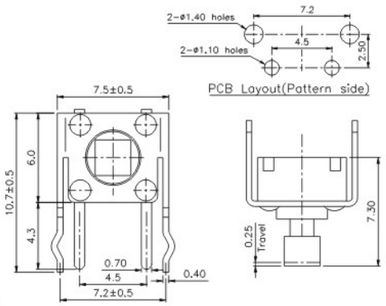

PCB Layout(Pattern side)

Rating:	50mA 12V DC
Operating force:	90gf,180gf,250gf
Travel:	0.25±0.1mm
Lifetime:	100,000Cycles

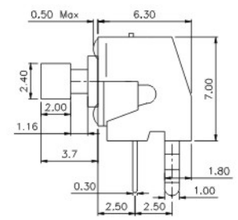

Circuit Diagram

K2-1102AQ

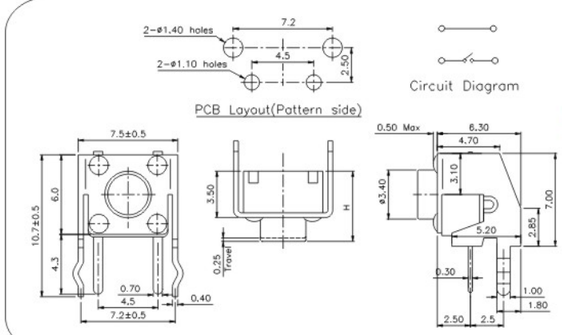

PCB Layout(Pattern side)

Circuit Diagram

Rating:	50mA 12V DC
Operating force:	90gf,180gf,250gf
Travel:	0.25±0.1mm
Lifetime:	100,000Cycles

PART NO	H	PART NO	H
A	4.3	O	11
B	4.5	P	11.5
C	5	Q	12
D	5.5	R	12.5
E	6	S	13
F	6.5	T	13.5
G	7	U	14
H	7.5	V	15
I	8	W	16
J	8.5	X	17
K	9	Y	18
L	9.5	Z	19
M	10	1	15.5
N	10.5		

K2-1102BQ

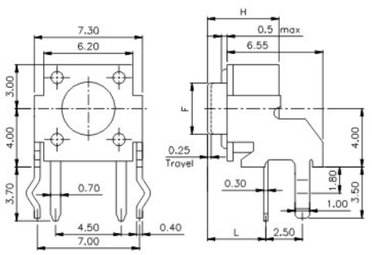

Rating:	50mA 12V DC
Operating force:	90gf,180gf,250gf
Travel:	0.25±0.1mm
Lifetime:	100,000Cycles

PART NO	H	L	F
A	4.3	3.15	ø3.40
C	5	3.85	ø3.40
E	6	4.85	ø3.40
G	7	5.85	ø3.20
I	8	6.85	ø3.00
K	9	7.85	ø3.00
L	9.5	8.35	ø3.00

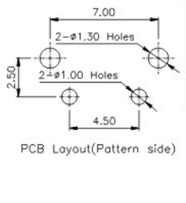

PCB Layout(Pattern side)

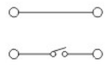

Circuit Diagram

K2-1102BG

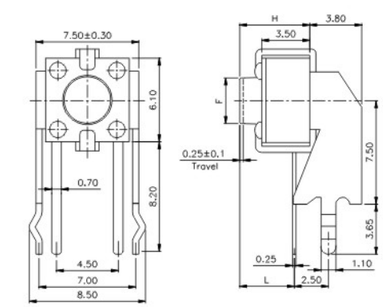

Rating:	50mA 12V DC
Operating force:	90gf,180gf,250gf
Travel:	0.25±0.1mm
Lifetime:	100,000Cycles

PART NO	H	L	F
A	4.3	3.15	ø3.40
C	5	3.85	ø3.40
E	6	4.85	ø3.40
G	7	5.85	ø3.20
I	8	6.85	ø3.00
K	9	7.85	ø3.00
L	9.5	8.35	ø3.00

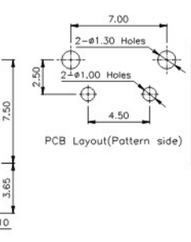

PCB Layout(Pattern side)

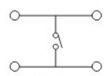

Circuit Diagram

K2-1102DW

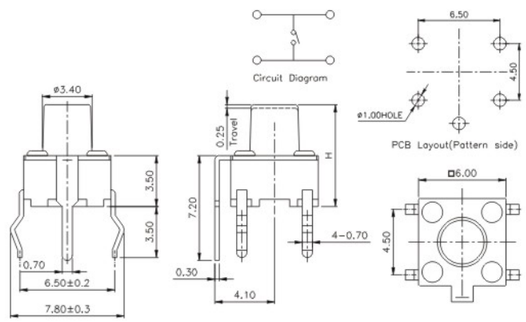

Rating:	50mA 12V DC
Opercting force:	90gf,180gf,250gf
Travel:	0.25±0.1mm
Lifetime:	100,000Cycles
	300,000Cycles

PART NO	H	PART NO	H
A	4.3	O	11
B	4.5	P	11.5
C	5	Q	12
D	5.5	R	12.5
E	6	S	13
F	6.5	T	13.5
G	7	U	14
H	7.5	V	15
I	8	W	16
J	8.5	X	17
K	9	Y	18
L	9.5	Z	19
M	10	1	15.5
N	10.5		

K2-1102DT

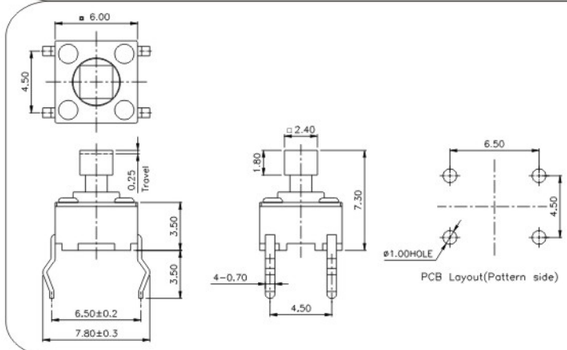

Rating:	50mA 12V DC
Opercting force:	90gf,180gf,250gf
Travel:	0.25±0.1mm
Lifetime:	100,000Cycles

K2-1102DP

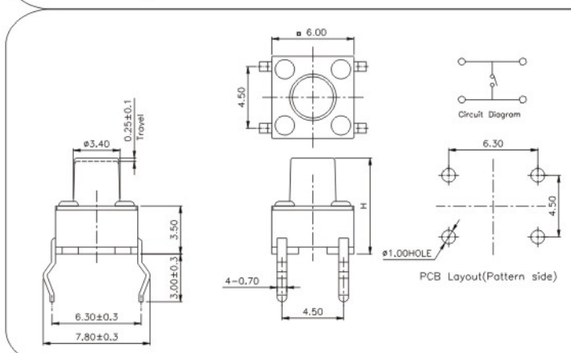

Rating:	50mA 12V DC
Opercting force:	90gf,180gf,250gf
Travel:	0.25±0.1mm
Lifetime:	100,000Cycles
	300,000Cycles

PART NO	H
A	4.3
B	4.5
C	5
D	5.5
E	6
F	6.5
G	7
H	7.5
I	8
J	8.5
K	9
L	9.5
M	10
N	10.5

K2-1102DF

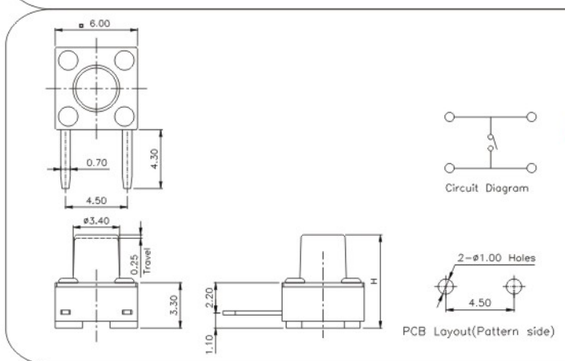

Rating:	50mA 12V DC
Opercting force:	90gf,180gf,250gf
Travel:	0.25±0.1mm
Lifetime:	100,000Cycles

PART NO	H	PART NO	H
A	4.3	O	11
B	4.5	P	11.5
C	5	Q	12
D	5.5	R	12.5
E	6	S	13
F	6.5	T	13.5
G	7	U	14
H	7.5	V	15
I	8	W	16
J	8.5	X	17
K	9	Y	18
L	9.5	Z	19
M	10	1	15.5
N	10.5		

外型图 Dimensions

K2-1102ST

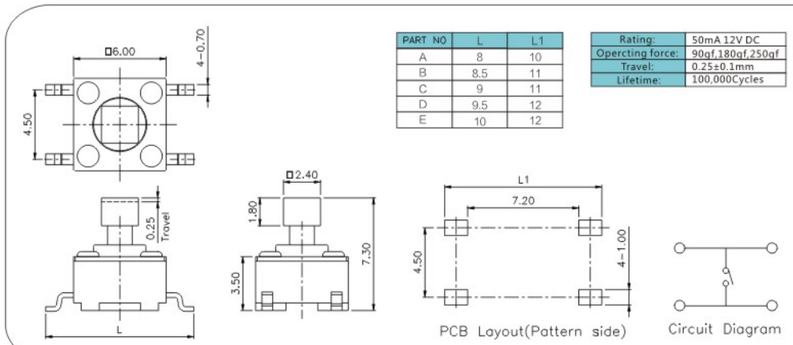

PART NO	L	L1
A	8	10
B	8.5	11
C	9	11
D	9.5	12
E	10	12

Rating:	50mA 12V DC
Opercting force:	90gf,180gf,250gf
Travel:	0.25±0.1mm
Lifetime:	100,000Cycles

K2-1102SP

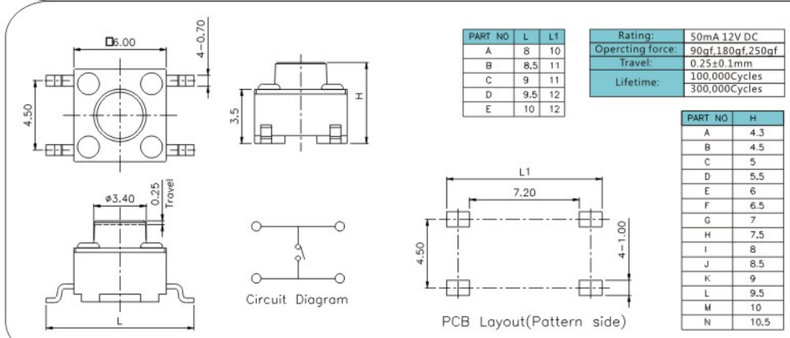

PART NO	L	L1
A	8	10
B	8.5	11
C	9	11
D	9.5	12
E	10	12

Rating:	50mA 12V DC
Opercting force:	90gf,180gf,250gf
Travel:	0.25±0.1mm
Lifetime:	100,000Cycles
	300,000Cycles

PART NO	H
A	4.3
B	4.5
C	5
D	5.5
E	6
F	6.5
G	7
H	7.5
I	8
J	8.5
K	9
L	9.5
M	10
N	10.5

K2-1102HD

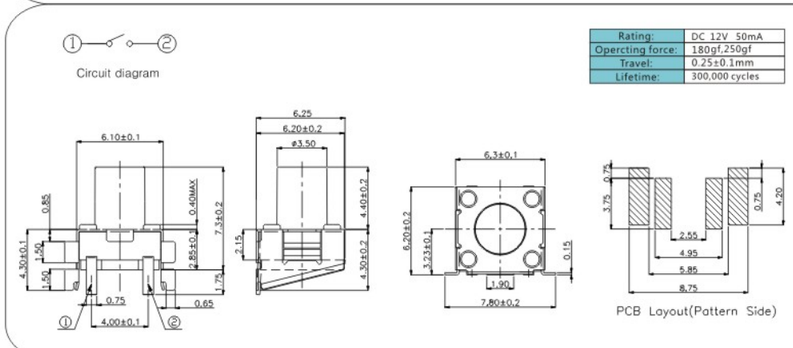

Rating:	DC 12V 50mA
Opercting force:	180gf,250gf
Travel:	0.25±0.1mm
Lifetime:	300,000 cycles

K2-1102HW

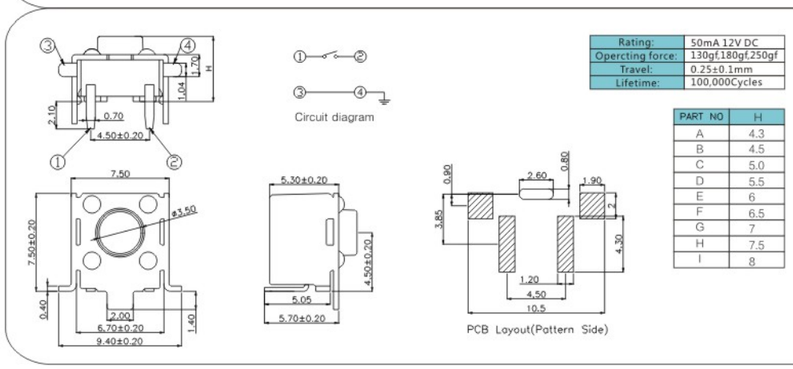

Rating:	50mA 12V DC
Opercting force:	130gf,180gf,250gf
Travel:	0.25±0.1mm
Lifetime:	100,000Cycles

PART NO	H
A	4.3
B	4.5
C	5.0
D	5.5
E	6
F	6.5
G	7
H	7.5
I	8

K2-1103DP

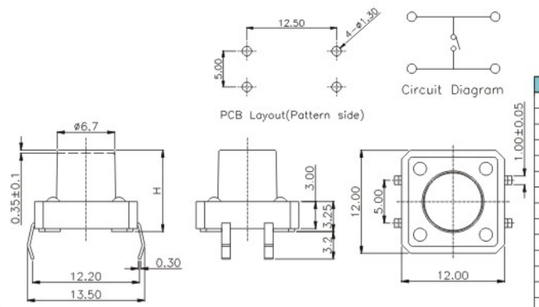

Rating:	50mA 12V DC
Operating force:	180gf,250gf
Travel:	0.35±0.1mm
Lifetime:	100,000Cycles

PART NO	H	PART NO	H
A	4.3	O	11
B	4.5	P	11.5
C	5	Q	12
D	5.5	R	12.5
E	6	S	13
F	6.5	T	13.5
G	7	U	14
H	7.5	V	15
I	8	W	16
J	8.5	X	17
K	9	Y	18
L	9.5	Z	19
M	10	1	15.5
N	10.5		

K2-1103DM

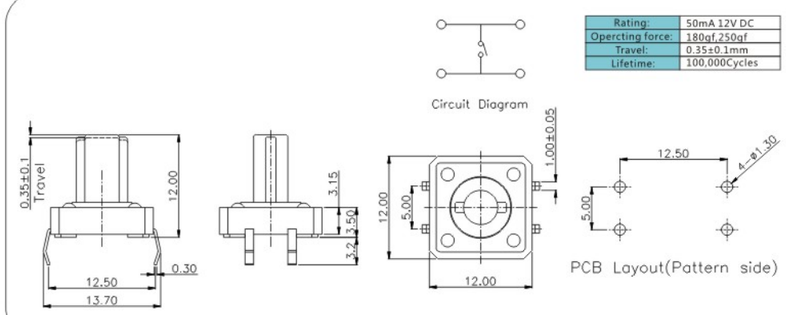

Rating:	50mA 12V DC
Operating force:	180gf,250gf
Travel:	0.35±0.1mm
Lifetime:	100,000Cycles

K2-1103DT

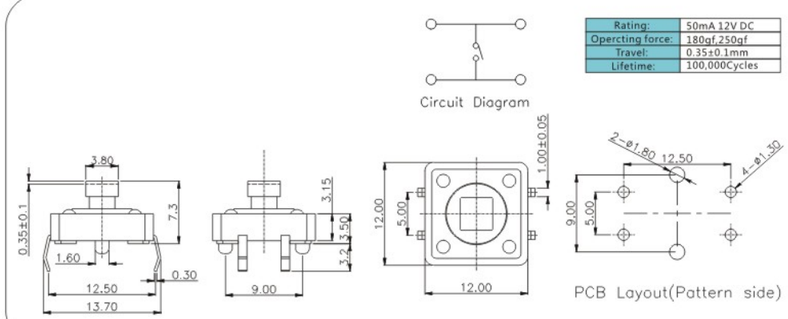

Rating:	50mA 12V DC
Operating force:	180gf,250gf
Travel:	0.35±0.1mm
Lifetime:	100,000Cycles

K2-1103SP

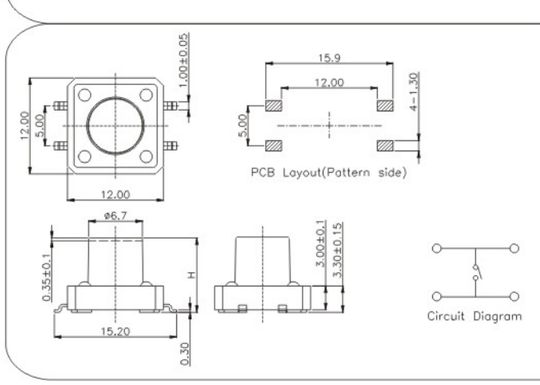

Rating:	50mA 12V DC
Operating force:	180gf,250gf
Travel:	0.35±0.1mm
Lifetime:	100,000Cycles

PART NO	H	PART NO	H
A	4.3	O	11
B	4.5	P	11.5
C	5	Q	12
D	5.5	R	12.5
E	6	S	13
F	6.5	T	13.5
G	7	U	14
H	7.5	V	15
I	8	W	16
J	8.5	X	17
K	9	Y	18
L	9.5	Z	19
M	10	1	15.5
N	10.5		

外型图 Dimensions

K2-1103ST

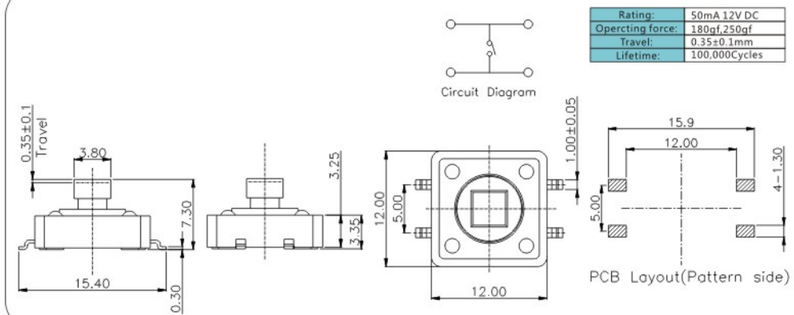

Rating:	50mA 12V DC
Operating force:	180gf,250gf
Travel:	0.35±0.1mm
Lifetime:	100,000Cycles

K2-1104DZ

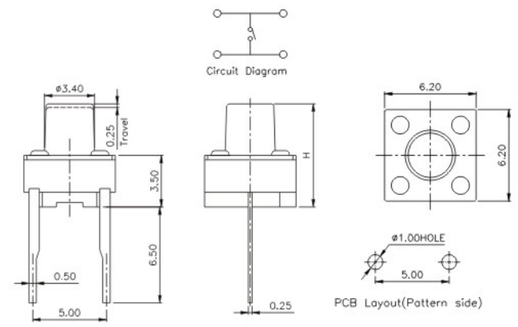

Rating:	50mA 12V DC
Operating force:	90gf,180gf,250gf
Travel:	0.25±0.1mm
Lifetime:	100,000Cycles

PART NO	H	PART NO	H
A	4.3	O	11
B	4.5	P	11.5
C	5	Q	12
D	5.5	R	12.5
E	6	S	13
F	6.5	T	13.5
G	7	U	14
H	7.5	V	15
I	8	W	16
J	8.5	X	17
K	9	Y	18
L	9.5	Z	19
M	10	1	15.5
N	10.5		

K2-1107SP

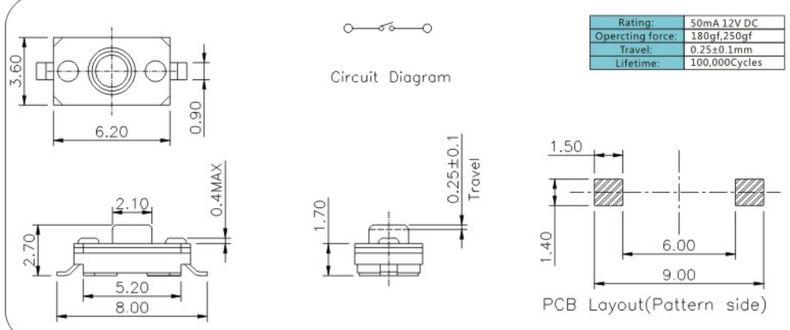

Rating:	50mA 12V DC
Operating force:	180gf,250gf
Travel:	0.25±0.1mm
Lifetime:	100,000Cycles

IP65

K2-1107DR

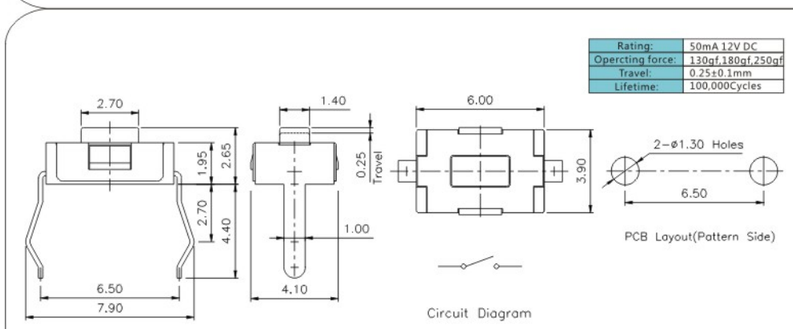

Rating:	50mA 12V DC
Operating force:	130gf,180gf,250gf
Travel:	0.25±0.1mm
Lifetime:	100,000Cycles

K2-1107UT

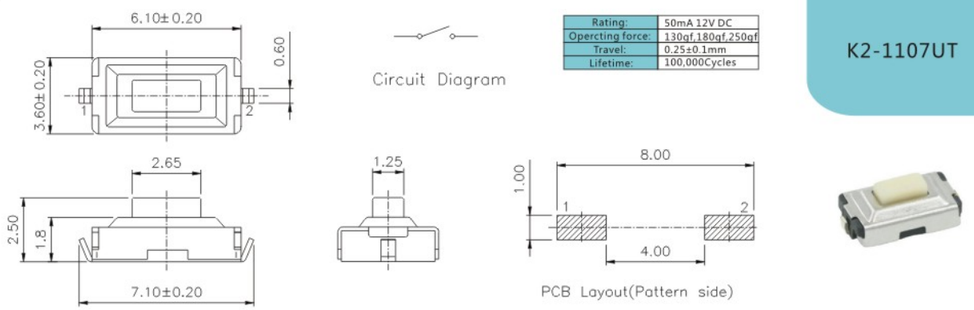

Rating:	50mA 12V DC
Opercting force:	130gf,180gf,250gf
Travel:	0.25±0.1mm
Lifetime:	100,000Cycles

K2-1107ST

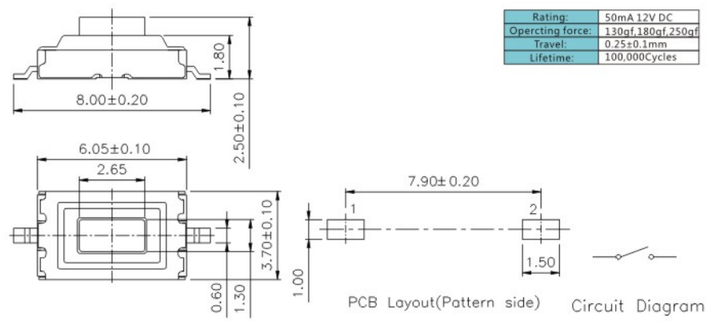

Rating:	50mA 12V DC
Opercting force:	130gf,180gf,250gf
Travel:	0.25±0.1mm
Lifetime:	100,000Cycles

K2-1107SR

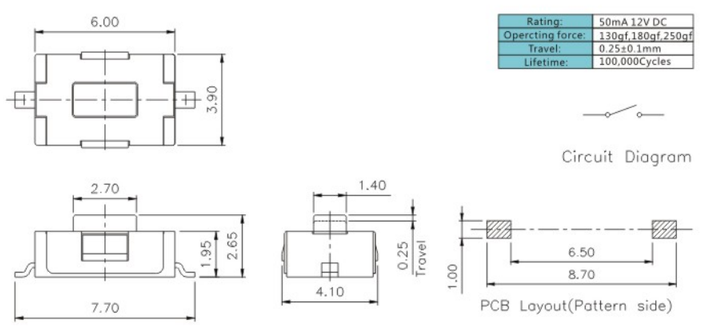

Rating:	50mA 12V DC
Opercting force:	130gf,180gf,250gf
Travel:	0.25±0.1mm
Lifetime:	100,000Cycles

K2-1109HW

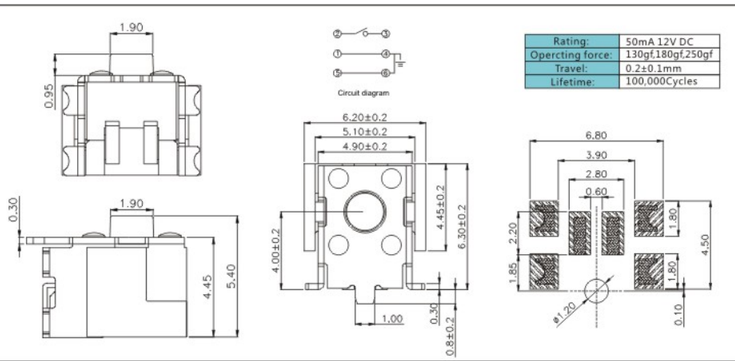

Rating:	50mA 12V DC
Opercting force:	130gf,180gf,250gf
Travel:	0.2±0.1mm
Lifetime:	100,000Cycles

外型图 Dimensions

K2-1109SP

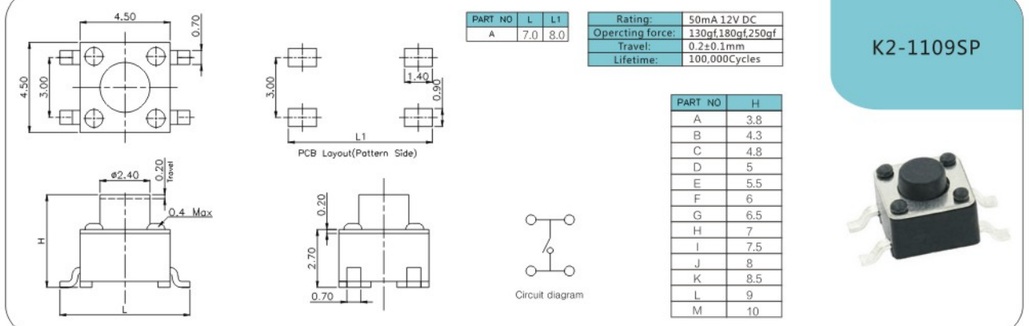

PART NO	L	L1
A	7.0	8.0

Rating:	50mA 12V DC
Opercting force:	130gf,180gf,250gf
Travel:	0.2±0.1mm
Lifetime:	100,000Cycles

PART NO	H
A	3.8
B	4.3
C	4.8
D	5
E	5.5
F	6
G	6.5
H	7
I	7.5
J	8
K	8.5
L	9
M	10

K2-1109SE

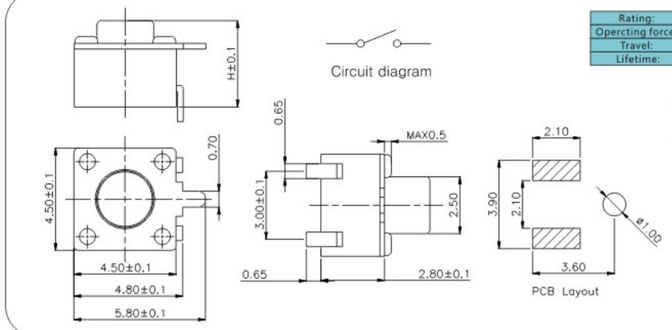

Rating:	50mA 12V DC
Opercting force:	180gf,250gf
Travel:	0.2±0.1mm
Lifetime:	100,000Cycles

PART NO	H
A	3.8
B	4.3
C	4.5
D	5
E	5.5
F	6
G	6.5
H	7
I	7.5
J	8
K	8.5
L	9
M	10

K2-1109AP

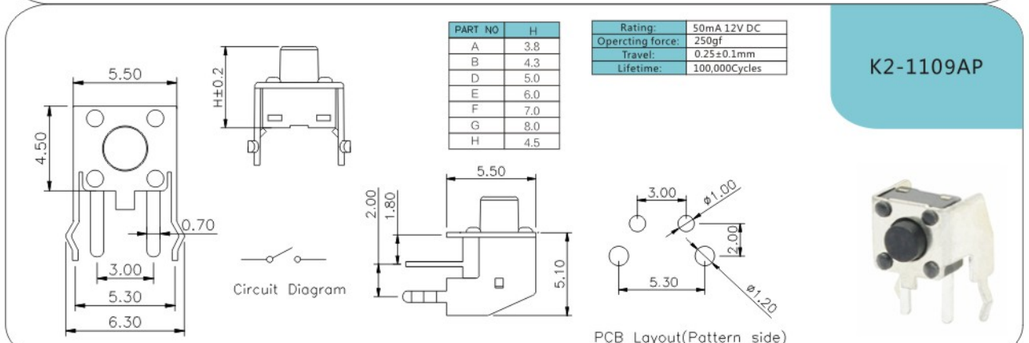

PART NO	H
A	3.8
B	4.3
D	5.0
E	6.0
F	7.0
G	8.0
H	4.5

Rating:	50mA 12V DC
Opercting force:	250gf
Travel:	0.25±0.1mm
Lifetime:	100,000Cycles

K2-1109AQ

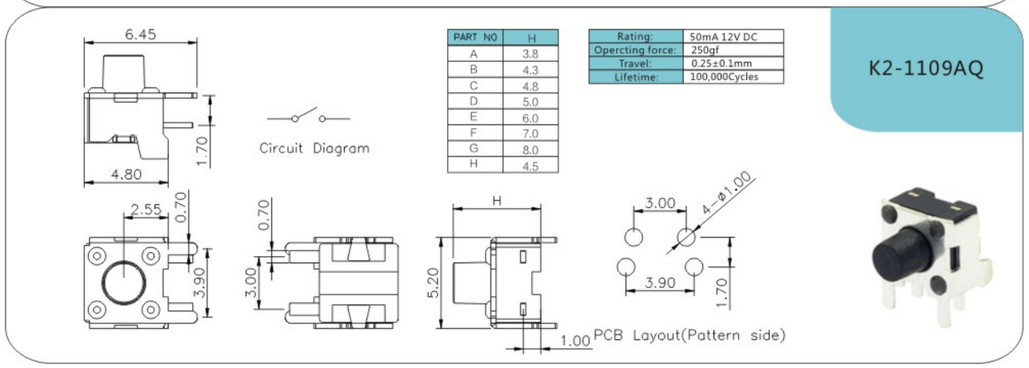

PART NO	H
A	3.8
B	4.3
C	4.8
D	5.0
E	6.0
F	7.0
G	8.0
H	4.5

Rating:	50mA 12V DC
Opercting force:	250gf
Travel:	0.25±0.1mm
Lifetime:	100,000Cycles

K2-1109DP

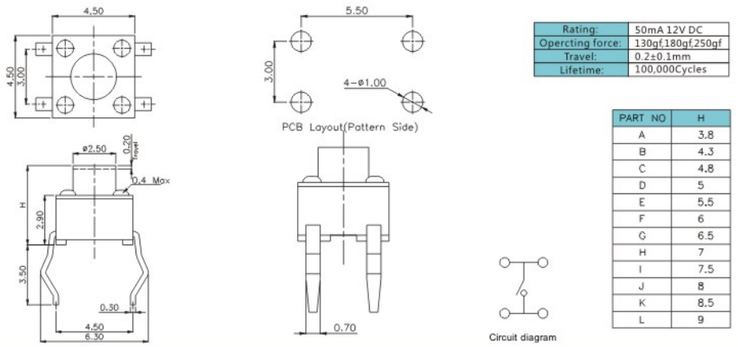

Rating:	50mA 12V DC
Opercting force:	130gf,180gf,250gf
Travel:	0.2±0.1mm
Lifetime:	100,000Cycles

PART NO	H
A	3.8
B	4.3
C	4.8
D	5
E	5.5
F	6
G	6.5
H	7
I	7.5
J	8
K	8.5
L	9

K2-1109DE

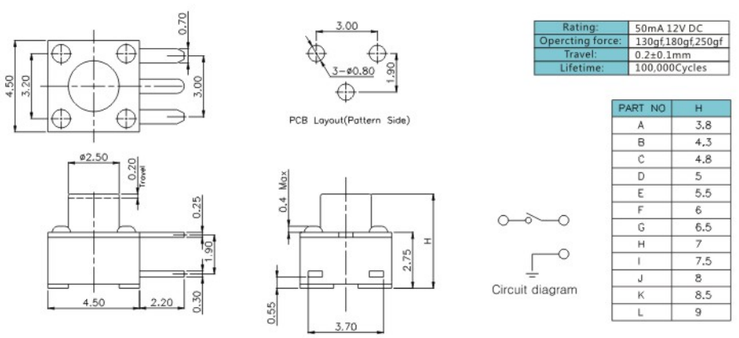

Rating:	50mA 12V DC
Opercting force:	130gf,180gf,250gf
Travel:	0.2±0.1mm
Lifetime:	100,000Cycles

PART NO	H
A	3.8
B	4.3
C	4.8
D	5
E	5.5
F	6
G	6.5
H	7
I	7.5
J	8
K	8.5
L	9

K2-1109DF

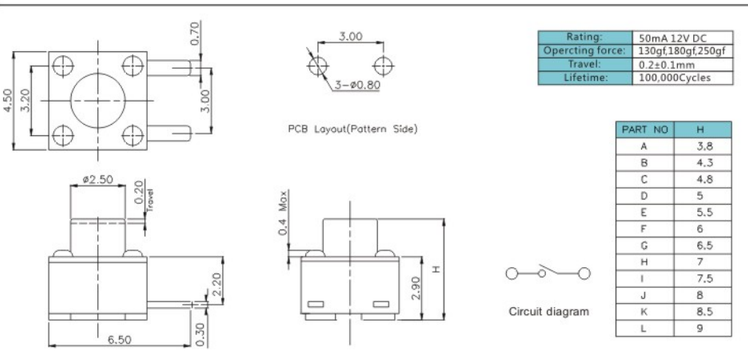

Rating:	50mA 12V DC
Opercting force:	130gf,180gf,250gf
Travel:	0.2±0.1mm
Lifetime:	100,000Cycles

PART NO	H
A	3.8
B	4.3
C	4.8
D	5
E	5.5
F	6
G	6.5
H	7
I	7.5
J	8
K	8.5
L	9

K2-1110DF

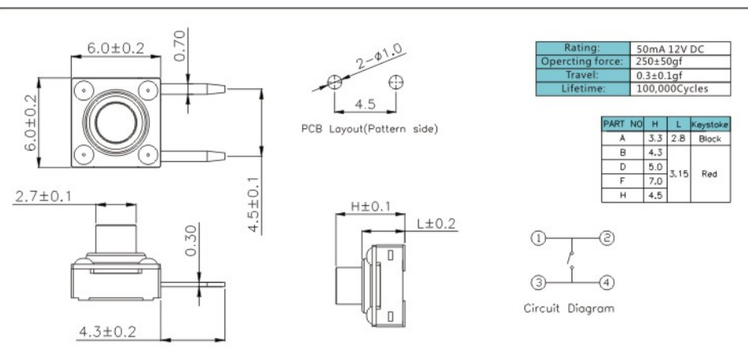

Rating:	50mA 12V DC
Opercting force:	250±50gf
Travel:	0.3±0.1gf
Lifetime:	100,000Cycles

PART NO	H	L	Keystoke
A	3.3	2.8	Black
B	4.3	3.15	Red
D	5.0		
F	7.0		
H	4.5		

IP67

外型图 Dimensions

K2-1110DP

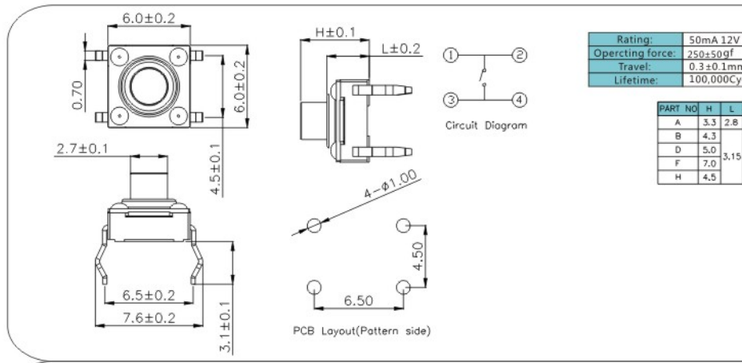

Rating:	50mA 12V DC
Opercting force:	250±50gf
Travel:	0.3±0.1mm
Lifetime:	100,000Cycles

PART NO	H	L	Keystoke
A	3.3	2.8	Black
B	4.3	3.15	Red
D	5.0		
F	7.0		
H	4.5		

IP67

K2-1110SP

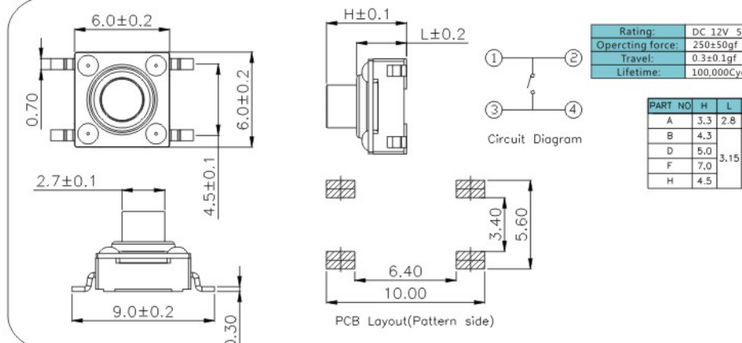

Rating:	DC 12V 50mA
Opercting force:	250±50gf
Travel:	0.3±0.1gf
Lifetime:	100,000Cycles

PART NO	H	L	Keystoke
A	3.3	2.8	Black
B	4.3	3.15	Red
D	5.0		
F	7.0		
H	4.5		

IP67

K2-1110SW

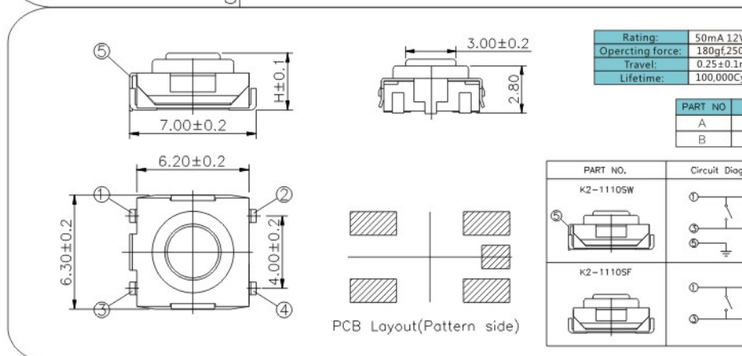

Rating:	50mA 12V DC
Opercting force:	180gf,250gf
Travel:	0.25±0.1mm
Lifetime:	100,000Cycles

PART NO	H
A	3.2
B	3.6

K2-1111SP

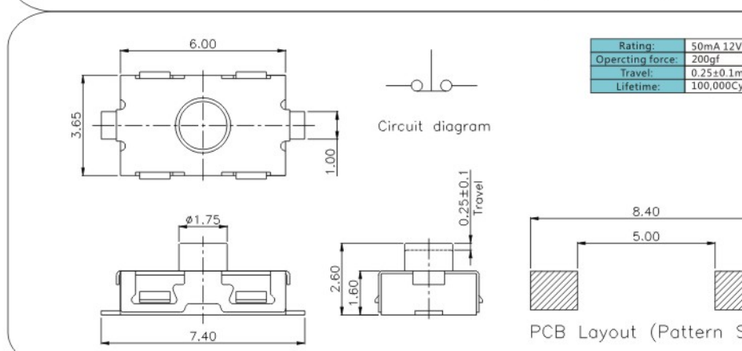

Rating:	50mA 12V DC
Opercting force:	200gf
Travel:	0.25±0.1mm
Lifetime:	100,000Cycles

K2-1111SQ

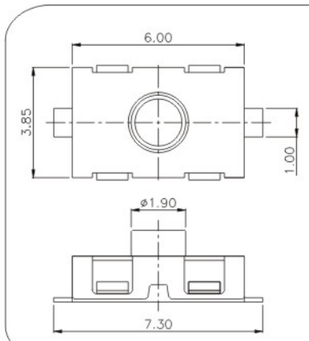

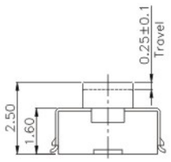

Circuit diagram

Rating:	50mA 12V DC
Operating force:	180gf,250gf
Travel:	0.25±0.1mm
Lifetime:	100,000Cycles

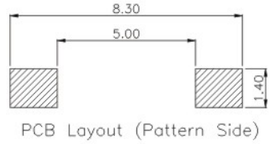

PCB Layout (Pattern Side)

K2-1112SQ

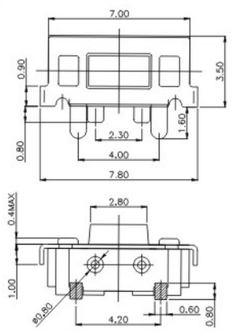

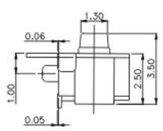

Rating:	50mA 12V DC
Operating force:	180gf,250gf
Travel:	0.25±0.1mm
Lifetime:	200,000Cycles

Circuit diagram

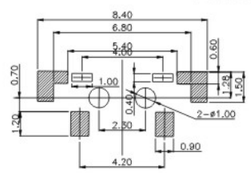

PCB Layout recommended

K2-1112SW

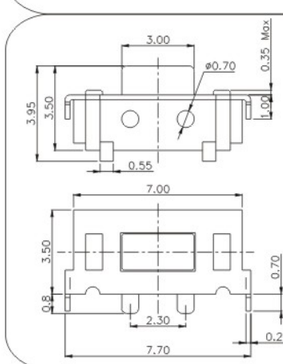

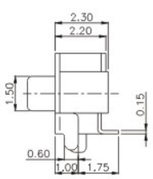

Rating:	50mA 12V DC
Operating force:	180gf,250gf
Travel:	0.25±0.1mm
Lifetime:	200,000Cycles

Circuit diagram

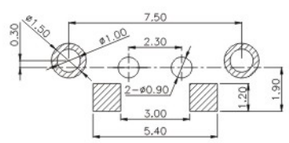

PCB Layout recommended

K2-1112SA

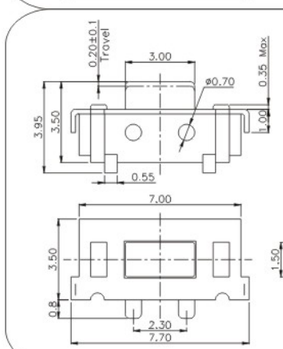

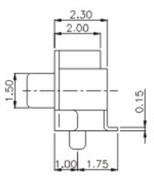

PART NO.	
K2-1112SA	K2-1112SN

Rating:	50mA 12V DC
Operating force:	180gf,250gf
Travel:	0.20±0.1mm
Lifetime:	100,000Cycles

Circuit diagram

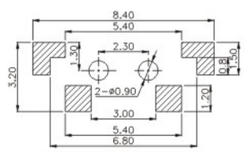

PCB Layout recommended

外型图 Dimensions

K2-1112GA

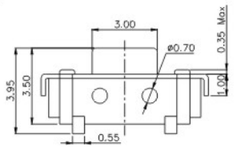

PART NO.	
K2-1112GA	K2-1112GN

Rating:	50mA 12V DC
Operating force:	180gf,250gf
Travel:	0.25±0.1mm
Lifetime:	100,000Cycles

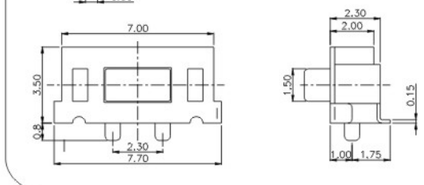

PCB Layout recommended

Circuit diagram

K2-1112AT

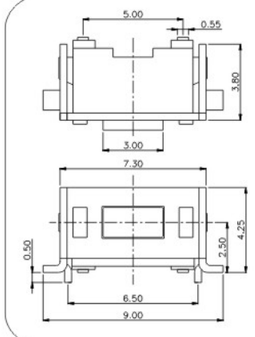

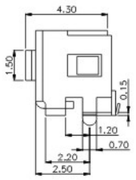

Rating:	50mA 12V DC
Operating force:	180gf,250gf
Travel:	0.25±0.1mm
Lifetime:	50,000Cycles

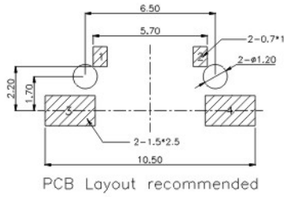

PCB Layout recommended

K2-1112DT

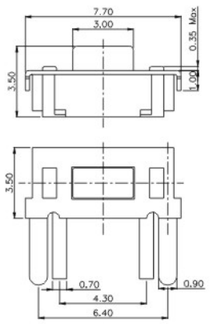

Rating:	50mA 12V DC
Operating force:	180gf,250gf
Travel:	0.25±0.1mm
Lifetime:	50,000Cycles

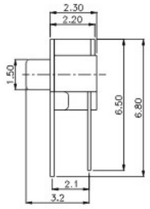

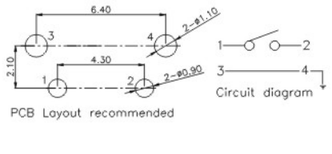

PCB Layout recommended

K2-1113SA

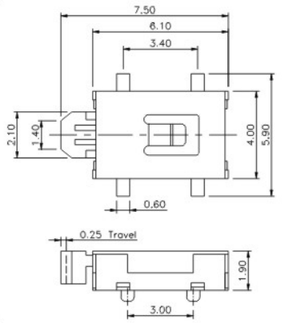

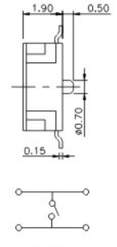

Rating:	50mA 12V DC
Operating force:	180gf,250gf
Travel:	0.25±0.1mm
Lifetime:	100,000Cycles

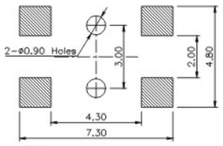

PCB Layout recommended

PART NO.
K2-1113SA
K2-1113SN

K2-1114SA

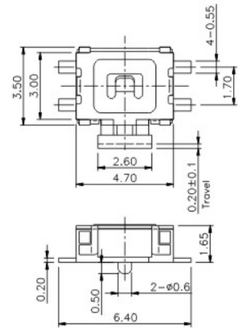

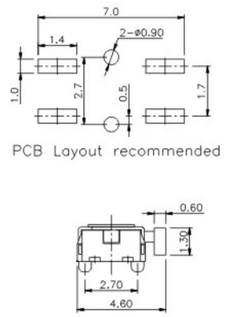

Rating:	50mA 12V DC
Opercting force:	180gf,250gf
Travel:	0.20±0.1mm
Lifetime:	100,000Cycles

PART NO.
K2-1114SA
K2-1114SN


Circuit diagram

K2-1114UA

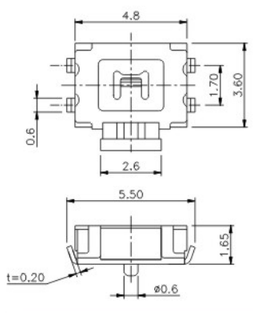

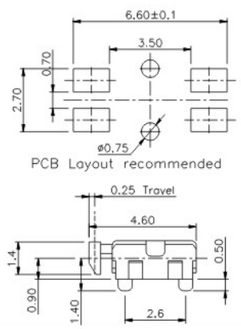

Rating:	50mA 12V DC
Opercting force:	180gf,250gf
Travel:	0.25±0.1mm
Lifetime:	100,000Cycles

PART NO.
K2-1114UA
K2-1114UN


Circuit diagram

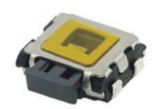

K2-1114UM

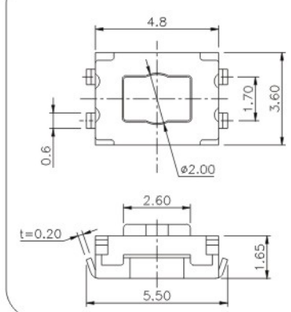

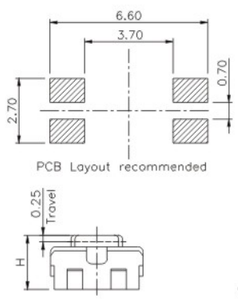

Rating:	50mA 12V DC
Opercting force:	130gf,180gf,250gf
Travel:	0.25±0.1mm
Lifetime:	100,000Cycles

PART NO.	
K2-1114UM	K2-1114SM

PART NO	H
A	2.1
B	2.5

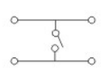
Circuit diagram

K2-1117DQ

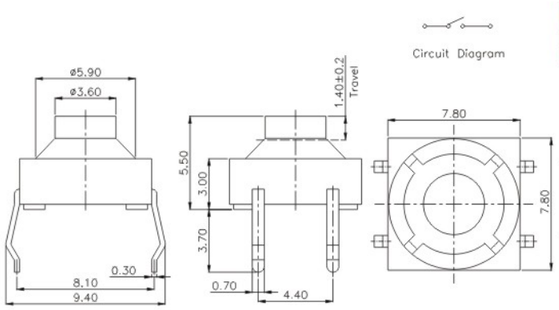

Rating:	50mA 12V DC
Opercting force:	160gf,250gf
Travel:	1.4±0.2mm
Lifetime:	100,000Cycles

外型图 Dimensions

K2-1117DZ

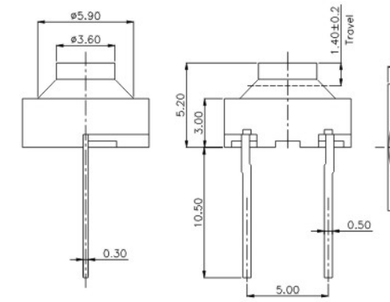

Rating:	50mA 12V DC
Opercting force:	160gf,250gf
Travel:	1.4 ±0.2mm
Lifetime:	100,000Cycles

K2-1122DQ

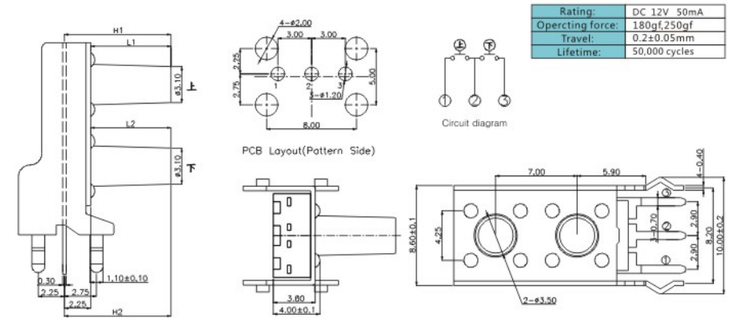

Rating:	DC 12V 50mA
Opercting force:	180gf,250gf
Travel:	0.2±0.05mm
Lifetime:	50,000 cycles

K2-1127SN

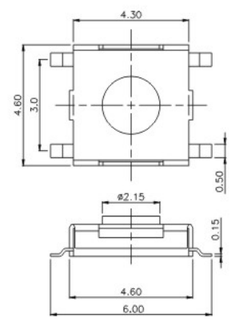

PART NO	H
A	1.5
F	2.8

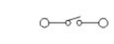
Circuit Diagram

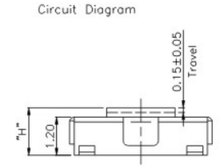

Rating:	50mA 12V DC
Opercting force:	180gf,250gf
Travel:	0.15±0.05mm
Lifetime:	100,000Cycles

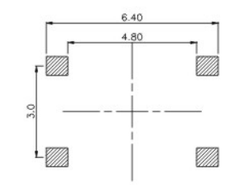

K2-1127SP

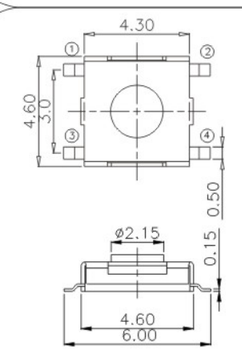

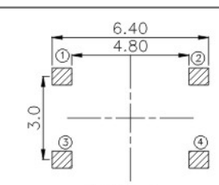

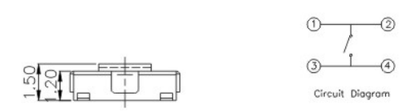

Rating:	50mA 12V DC
Opercting Forcel:	300±50gf
Travel:	0.3±0.1mm
Lifetime:	100,000Cycles

K2-1156UP

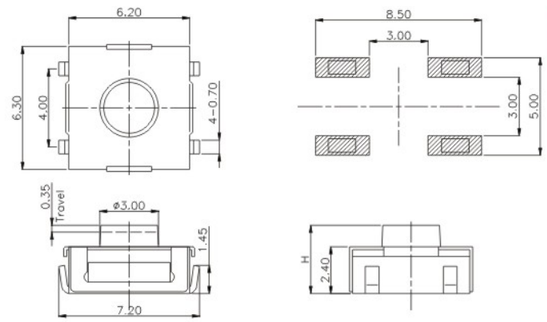

Rating:	50mA 12V DC
Opercting force:	180gf,250gf
Travel:	0.35±0.1mm
Lifetime:	100,000Cycles

PART NO	H
C	3.1
D	3.4
F	5

Circuit Diagram

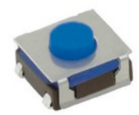

K2-1156SP

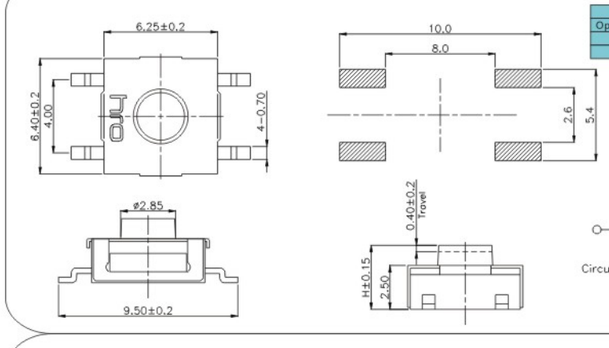

Rating:	50mA 12V DC
Opercting force:	180gf,250gf
Travel:	0.4±0.2mm
Lifetime:	300,000Cycles

PART NO	H
C	3.1
D	3.5
A	3.8
G	4.3
B	4.5
M	4.8
N	5.2
E	5.5

IP67

Circuit Diagram

K2-1157DP

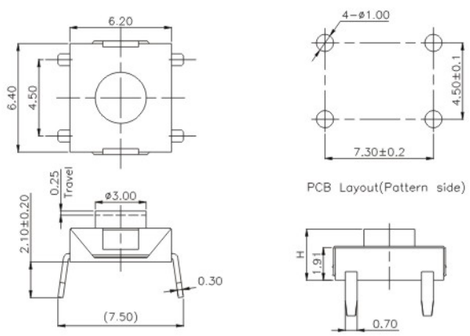

PCB Layout(Pattern side)

Rating:	50mA 12V DC
Opercting force:	90gf,180gf,250gf
Travel:	0.25±0.1mm
Lifetime:	100,000Cycles

PART NO	H
B	2.5
C	3.1
D	3.4
E	5.5

Circuit Diagram

K2-1157DW

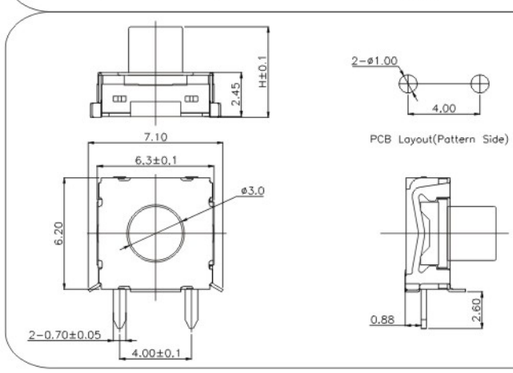

PCB Layout(Pattern Side)

Rating:	DC 12V 50mA
Opercting force:	180gf,250gf,350gf
Travel:	0.25±0.1mm
Lifetime:	100,000 cycles

PART NO	H
A	3.5
C	5

Circuit diagram

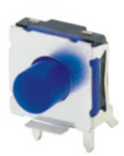

外型图 Dimensions

K2-1157SP

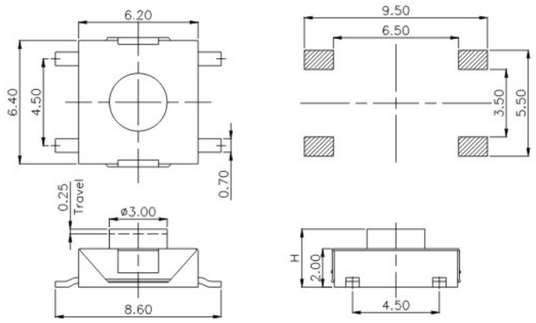

Rating:	DC 12V 50mA
Opercting force:	90gf,180gf,250gf
Travel:	0.25±0.1mm
Lifetime:	100,000 cycles

PART NO	H
B	2.5
C	3.1
D	3.4
E	5.5
I	3.7
G	4.3

Circuit Diagram

K2-1157SQ

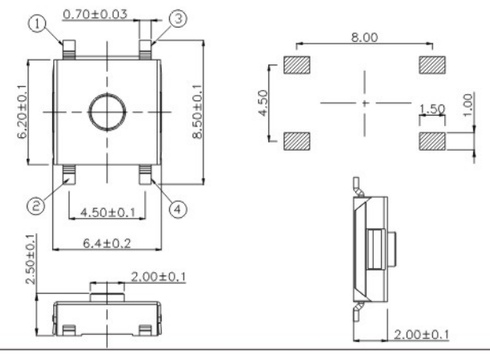

Rating:	50mA 12V DC
Opercting force:	160gf
Travel:	0.3±0.1mm
Lifetime:	500,000Cycles

Circuit Diagram

K2-1157UG

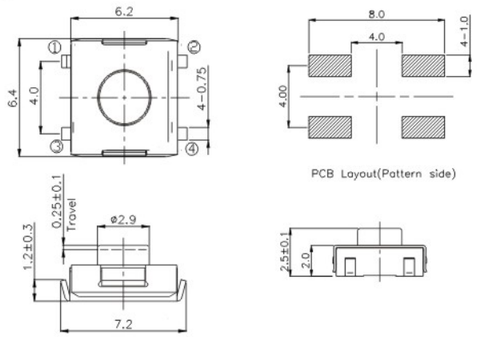

PCB Layout(Pattern side)

Rating:	50mA 12V DC
Opercting Forcel:	180±30gf
Travel:	0.25±0.1mm
Lifetime:	100,000Cycles

Circuit Diagram

K2-1157UP

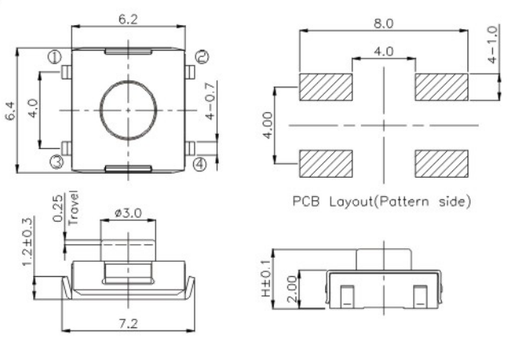

PCB Layout(Pattern side)

Rating:	50mA 12V DC
Opercting Forcel:	180gf,250gf
Travel:	0.25±0.1mm
Lifetime:	100,000Cycles

PART NO	H
B	2.5
C	3.1
D	3.4
E	5.5
F	5

Circuit Diagram

K2-1157UQ

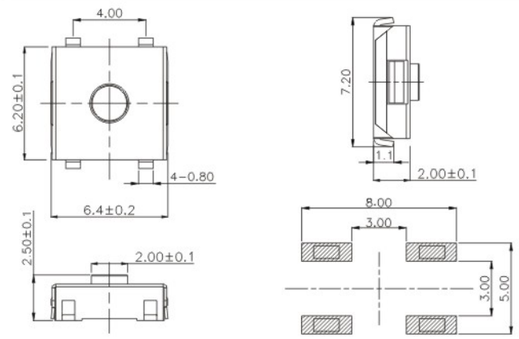

Rating:	50mA 12V DC
Operating Force:	180±30gf
Travel:	0.3±0.1mm
Lifetime:	100,000Cycles

K2-1177SW

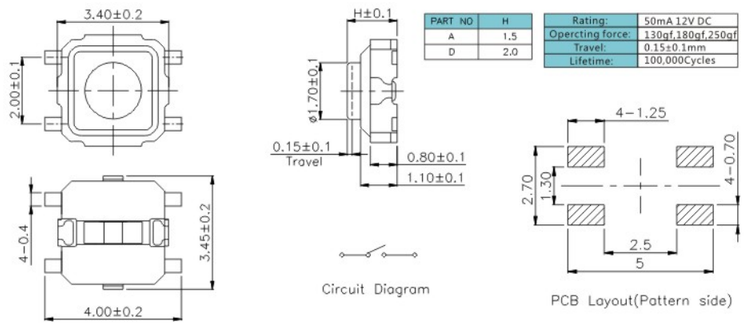

PART NO	H
A	1.5
D	2.0

Rating:	50mA 12V DC
Operating force:	130gf,180gf,250gf
Travel:	0.15±0.1mm
Lifetime:	100,000Cycles

K2-1177SR

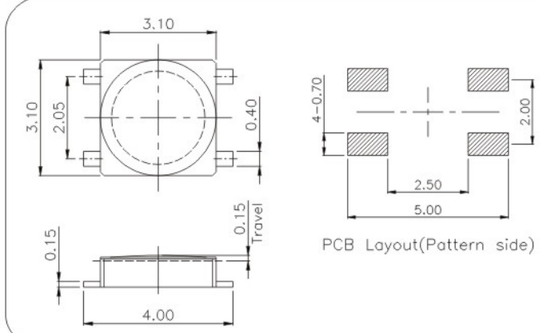

Rating:	50mA 12V DC
Operating force:	90gf,180gf,250gf
Travel:	0.15±0.1mm
Lifetime:	100,000Cycles

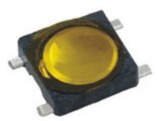

K2-1187SN

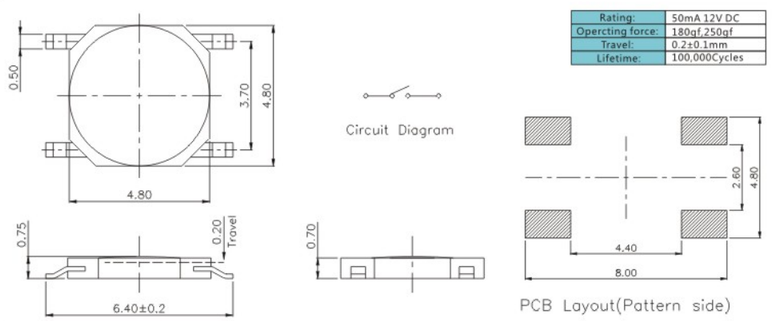

Rating:	50mA 12V DC
Operating force:	180gf,250gf
Travel:	0.2±0.1mm
Lifetime:	100,000Cycles

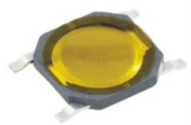

外型图 Dimensions

K2-1187SR

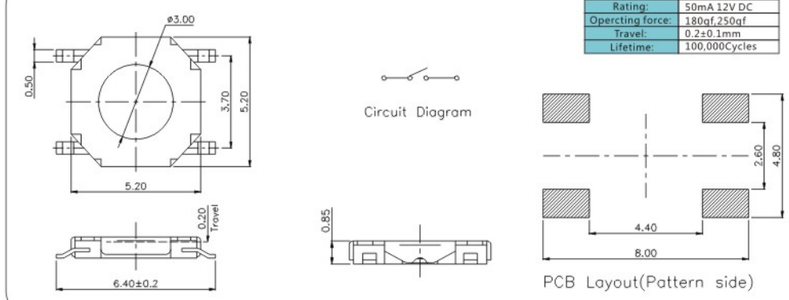

Rating:	50mA 12V DC
Operating force:	180gf,250gf
Travel:	0.2±0.1mm
Lifetime:	100,000Cycles

K2-1187SH

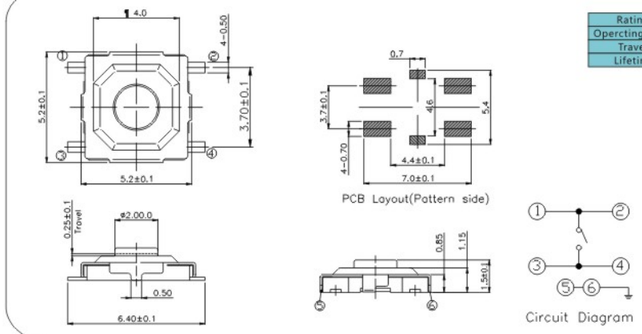

Rating:	50mA 12V DC
Operating force:	180gf,250gf
Travel:	0.25±0.1mm
Lifetime:	100,000Cycles

PART NO	H
A	1.5
B	1.6
C	1.7
D	2.0
E	2.5
F	3.0
G	4.3
J	3.5

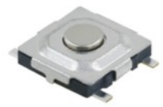

K2-1187SQ

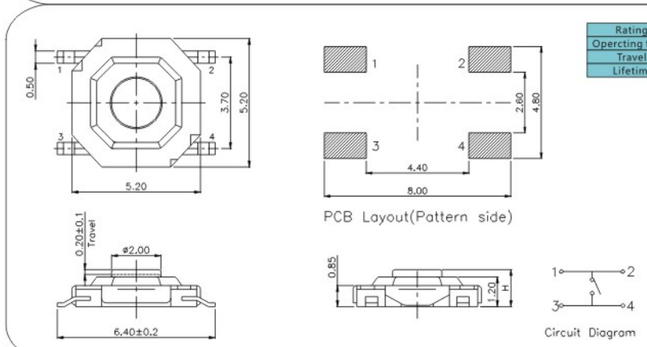

Rating:	50mA 12V DC
Operating force:	180gf,250gf
Travel:	0.2±0.1mm
Lifetime:	100,000Cycles

PART NO	H
A	1.5
B	1.6
C	1.7
D	2.0
E	2.5
F	3.0
G	4.3
J	3.5
H	5.0
I	1.8

K2-1187UQ

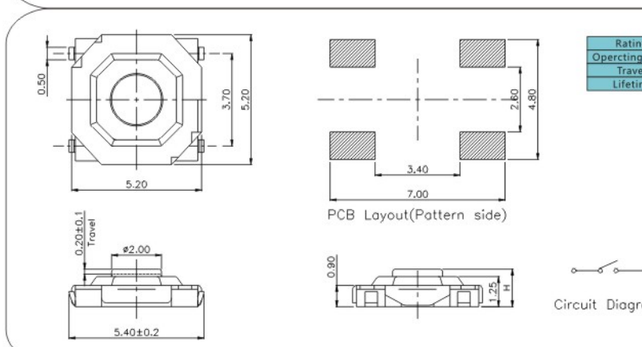

Rating:	50mA 12V DC
Operating force:	180gf,250gf
Travel:	0.2±0.1mm
Lifetime:	100,000Cycles

PART NO	H
A	1.5
B	1.6
C	1.7
D	2.0
E	2.5
F	3.0
G	4.3

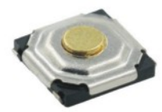

K2-1805ST

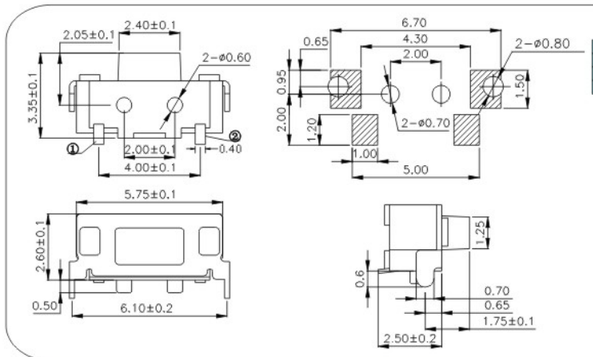

Rating:	DC 12 50mA
Opercting Forcel:	160gf,250gf
Travel:	0.2±0.1mm
Lifetime:	100,000Cycles

Circuit Diagram

K2-1806SG

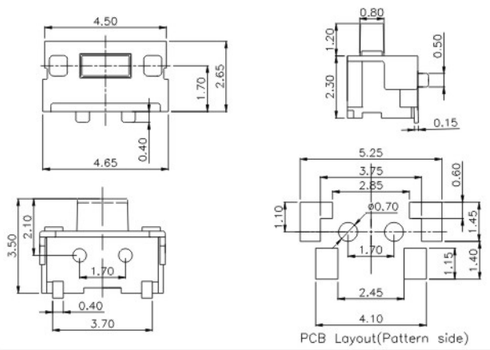

Rating:	50mA 12V DC
Opercting force:	180gf,250gf
Travel:	0.15±0.05mm
Lifetime:	100,000Cycles

Circuit Diagram

PCB Layout(Pattern side)

K2-1806FN

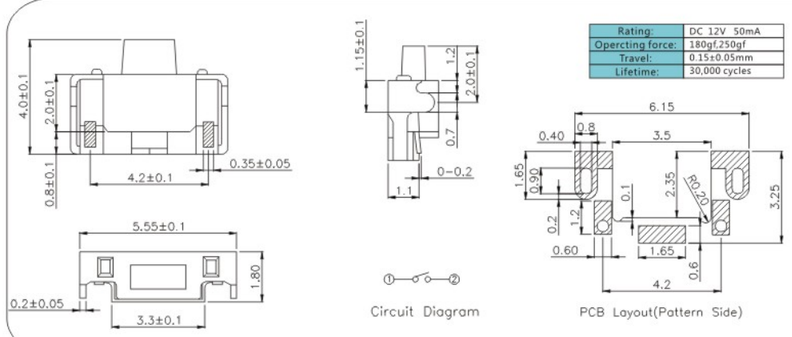

Rating:	DC 12V 50mA
Opercting force:	180gf,250gf
Travel:	0.15±0.05mm
Lifetime:	30,000 cycles

Circuit Diagram

PCB Layout(Pattern Side)

K2-1806SA

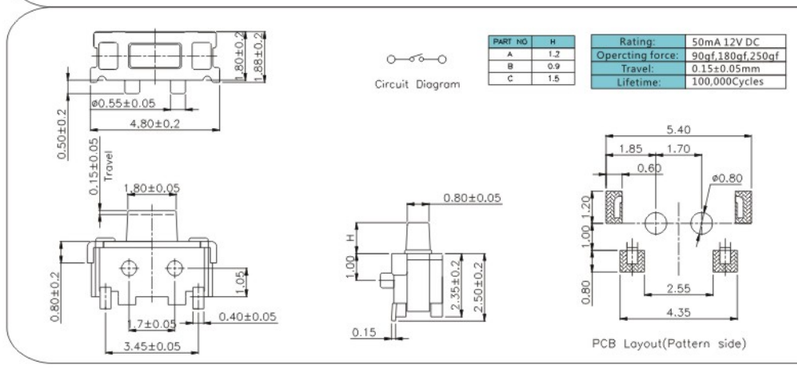

PART NO	H
A	1.2
B	0.9
C	1.5

Rating:	50mA 12V DC
Opercting force:	90gf,180gf,250gf
Travel:	0.15±0.05mm
Lifetime:	100,000Cycles

Circuit Diagram

PCB Layout(Pattern side)

外型图 Dimensions

K2-1806SQ

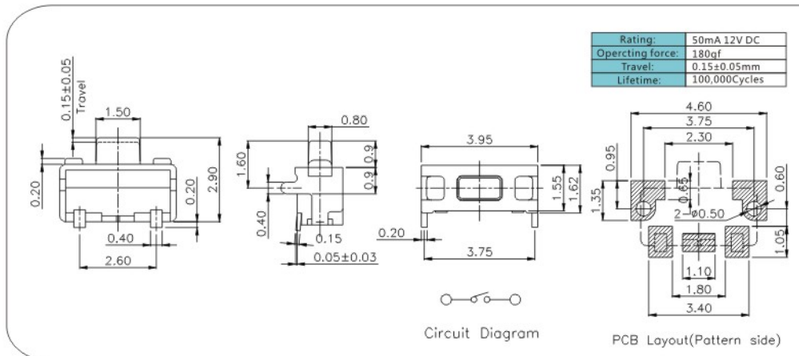

Rating:	50mA 12V DC
Opercting force:	180gf
Travel:	0.15±0.05mm
Lifetime:	100,000Cycles

Circuit Diagram

PCB Layout(Pattern side)

K2-1806AN

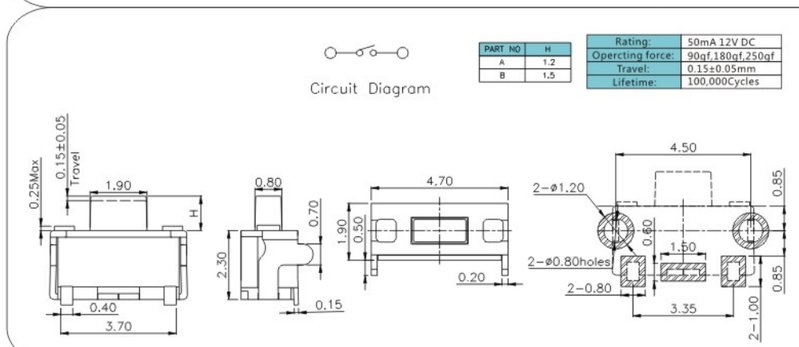

PART NO	H
A	1.2
B	1.5

Rating:	50mA 12V DC
Opercting force:	90gf,180gf,250gf
Travel:	0.15±0.05mm
Lifetime:	100,000Cycles

Circuit Diagram

K2-1807SM

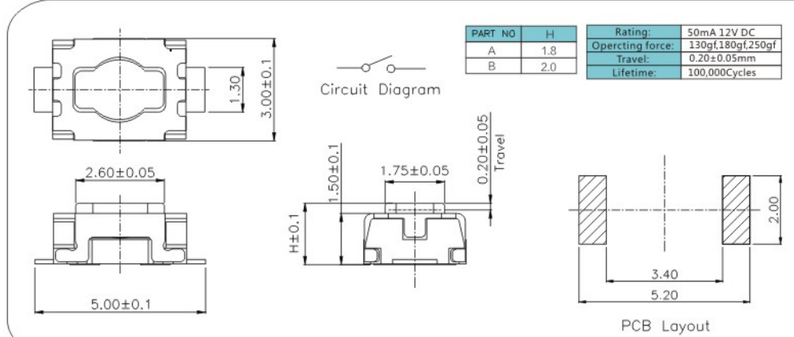

PART NO	H
A	1.8
B	2.0

Rating:	50mA 12V DC
Opercting force:	130gf,180gf,250gf
Travel:	0.20±0.05mm
Lifetime:	100,000Cycles

Circuit Diagram

PCB Layout

K2-1807SA

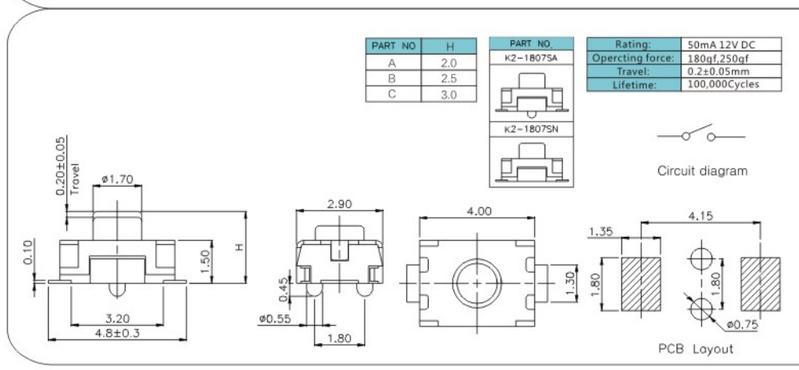

PART NO	H
A	2.0
B	2.5
C	3.0

PART NO.
K2-1807SA
K2-1807SN

Rating:	50mA 12V DC
Opercting force:	180gf,250gf
Travel:	0.2±0.05mm
Lifetime:	100,000Cycles

Circuit diagram

PCB Layout

K2-1807UA

PART NO	H
A	2.0
B	2.5

PART NO.
K2-1807UA
K2-1807UN

Rating:	50mA 12V DC
Opercting force:	180gf,250gf
Travel:	0.2±0.05mm
Lifetime:	100,000Cycles

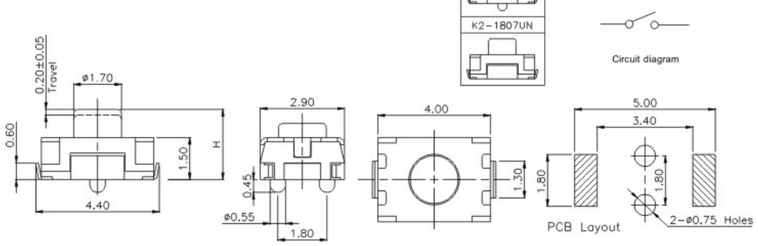

K2-1807GA

PART NO	H
A	2.0
B	2.5

PART NO.
K2-1807GA
K2-1807GN

Rating:	50mA 12V DC
Opercting force:	180gf,250gf
Travel:	0.2±0.05mm
Lifetime:	100,000Cycles

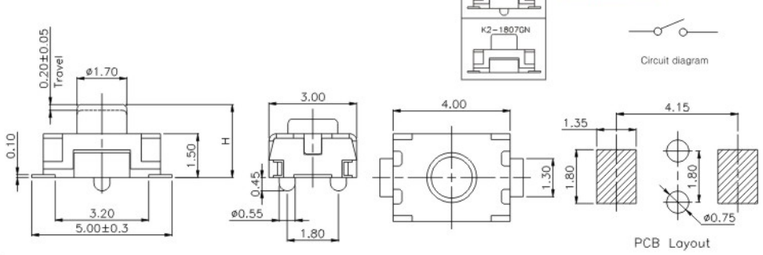

K2-1808GN

Rating:	50mA 12V DC
Opercting force:	180gf,250gf
Travel:	0.35±0.15mm
Lifetime:	100,000Cycles

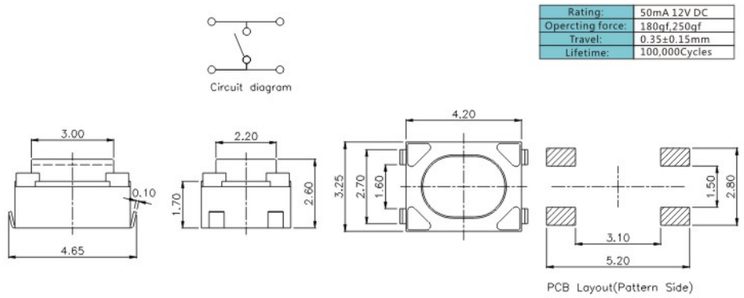

K2-1808SN

PART NO	H
A	2.5
B	2.8
C	3.5
D	4.0

Rating:	50mA 12V DC
Opercting force:	180gf,250gf
Travel:	0.2±0.1mm
Lifetime:	100,000Cycles

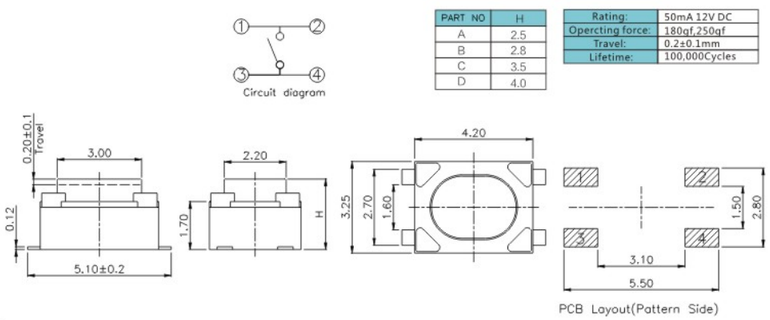

外型图 Dimensions

K2-1808UN

PART NO	H
A	2.5
B	2.8
C	3.5
D	4.0

Rating:	DC 12V 50mA
Opercting force:	90gf,180gf,250gf
Travel:	0.20±0.1mm
Lifetime:	100,000 cycles

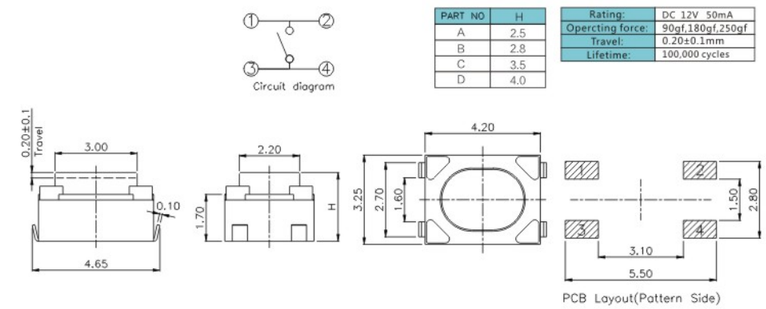

K2-1809SM

PART NO	H
A	2.0
H	1.8

Rating:	DC 12V 50mA
Opercting force:	160gf,250gf
Travel:	0.18±0.05mm
Lifetime:	100,000 cycles

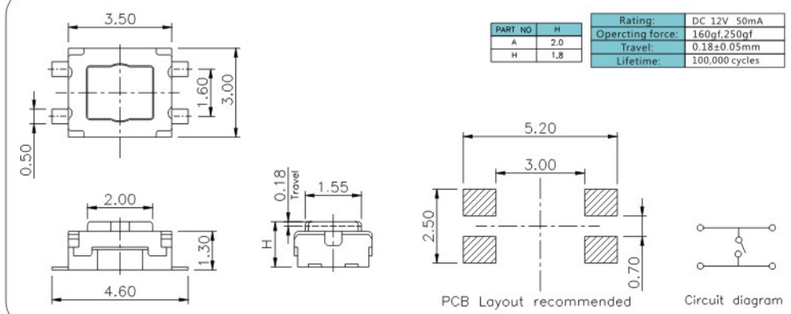

K2-1809SN

PART NO	H
A	1.80
B	1.87
C	1.92
D	2.00
E	2.50

Rating:	50mA 12V DC
Opercting force:	180gf,250gf
Travel:	0.13±0.05mm
Lifetime:	100,000Cycles

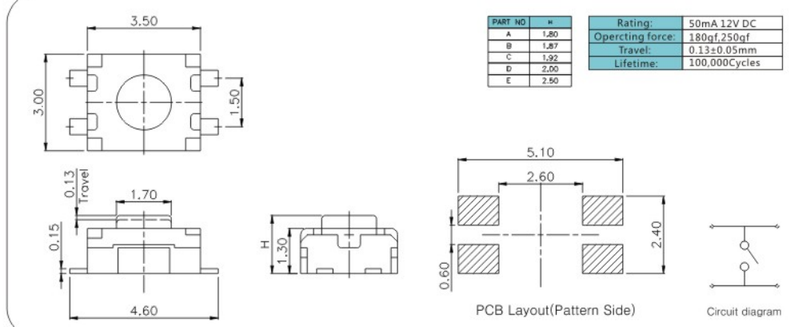

K2-1812SA

PART NO	H
D	3.4
F	5.0

Rating:	50mA 12V DC
Opercting force:	180gf,250gf
Travel:	0.2±0.1mm
Lifetime:	100,000Cycles

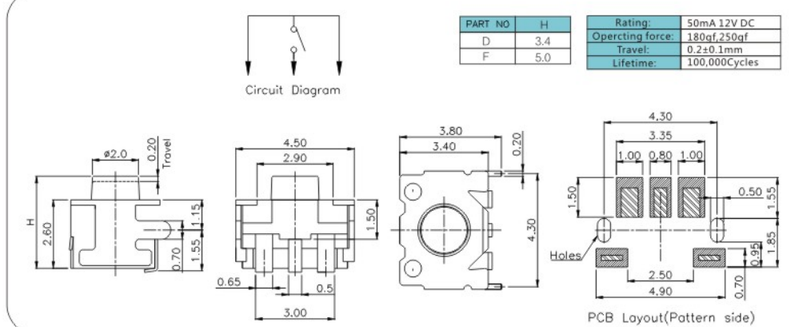

K2-1812GA

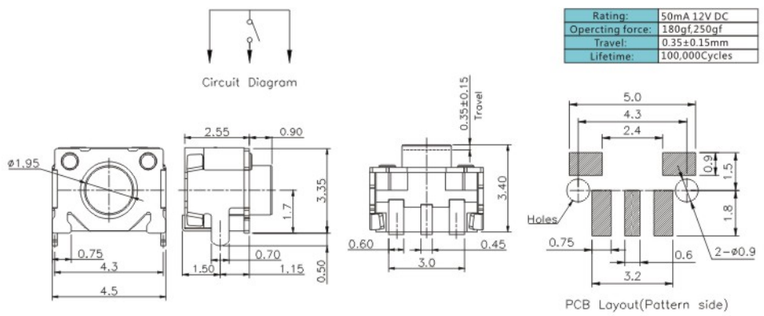

Rating:	50mA 12V DC
Opercting force:	180gf,250gf
Travel:	0.35±0.15mm
Lifetime:	100,000Cycles

K2-1813SL

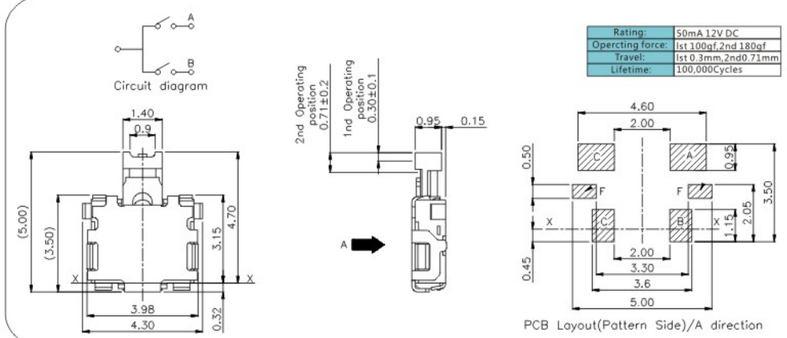

Rating:	50mA 12V DC
Opercting force:	1st 100gf,2nd 180gf
Travel:	1st 0.3mm,2nd0.71mm
Lifetime:	100,000Cycles

K2-1817UQ

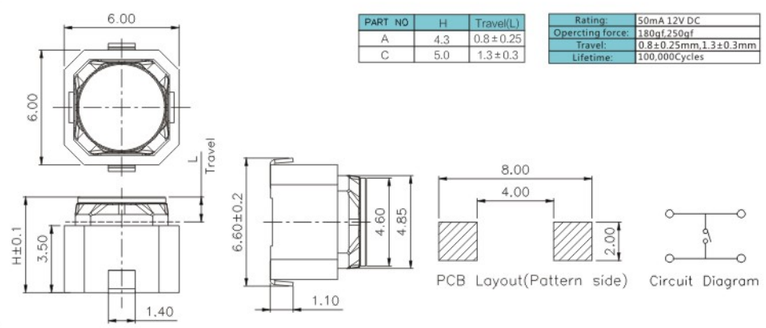

PART NO	H	Travel(L)
A	4.3	0.8±0.25
C	5.0	1.3±0.3

Rating:	50mA 12V DC
Opercting force:	180gf,250gf
Travel:	0.8±0.25mm,1.3±0.3mm
Lifetime:	100,000Cycles

K2-1818DP

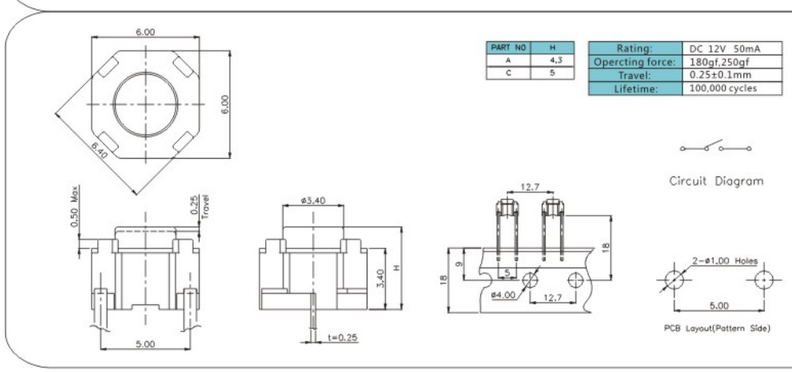

PART NO	H
A	4.3
C	5

Rating:	DC 12V 50mA
Opercting force:	180gf,250gf
Travel:	0.25±0.1mm
Lifetime:	100,000 cycles

外型图 Dimensions

K2-1820UA

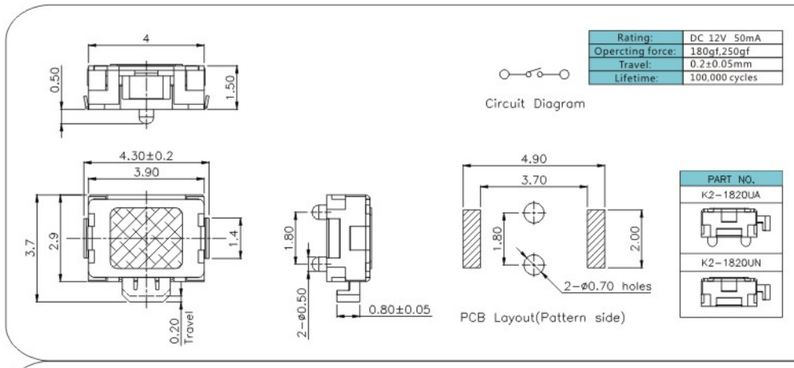

Rating:	DC 12V 50mA
Opercting force:	180gf,250gf
Travel:	0.2±0.05mm
Lifetime:	100,000 cycles

K2-1820SA

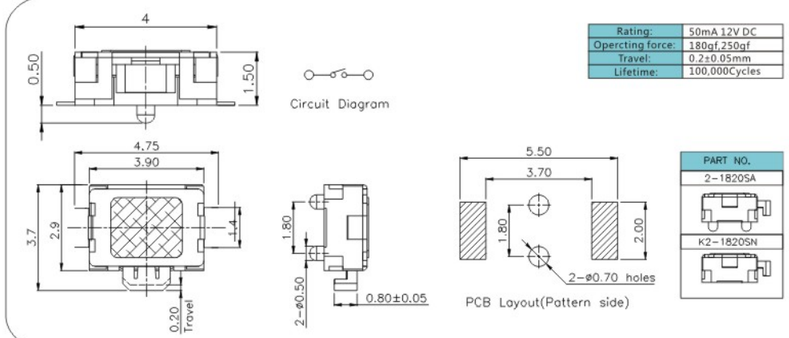

Rating:	50mA 12V DC
Opercting force:	180gf,250gf
Travel:	0.2±0.05mm
Lifetime:	100,000Cycles

K2-1821DQ

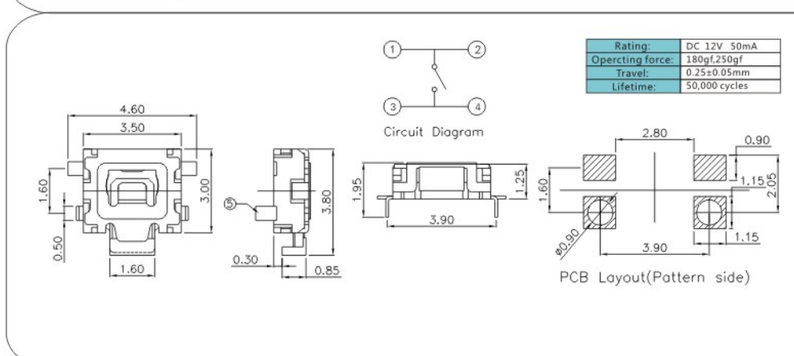

Rating:	DC 12V 50mA
Opercting force:	180gf,250gf
Travel:	0.25±0.05mm
Lifetime:	50,000 cycles

K2-1821SH

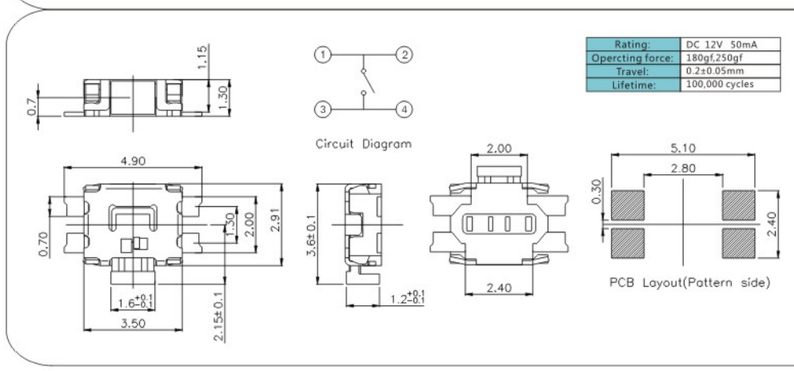

Rating:	DC 12V 50mA
Opercting force:	180gf,250gf
Travel:	0.2±0.05mm
Lifetime:	100,000 cycles

K2-1821SA

Rating:	50mA 12V DC
Opercting force:	180gf,250gf
Travel:	0.2±0.05mm
Lifetime:	100,000Cycles

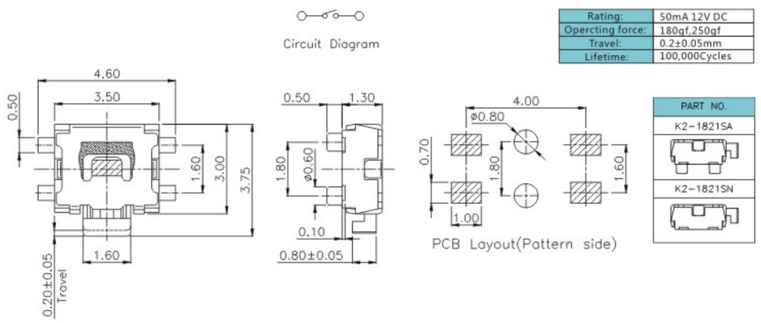

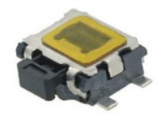

K2-1822SA

Rating:	50mA 12V DC
Opercting force:	180gf,250gf
Travel:	0.15±0.05mm
Lifetime:	100,000Cycles

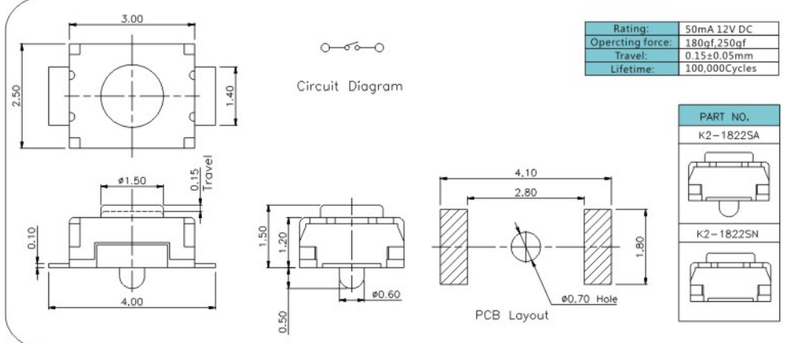

K2-1823SA

Rating:	50mA 12V DC
Opercting force:	180gf,250gf
Travel:	0.2±0.1mm
Lifetime:	100,000Cycles

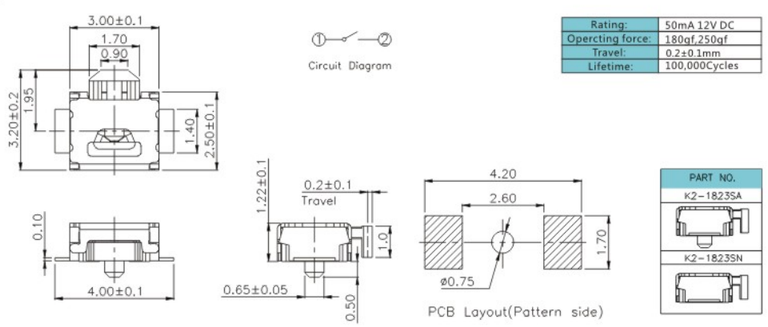

K2-1824SR

Rating:	50mA 12V DC
Opercting force:	180gf,250gf
Travel:	0.2±0.1mm
Lifetime:	100,000Cycles

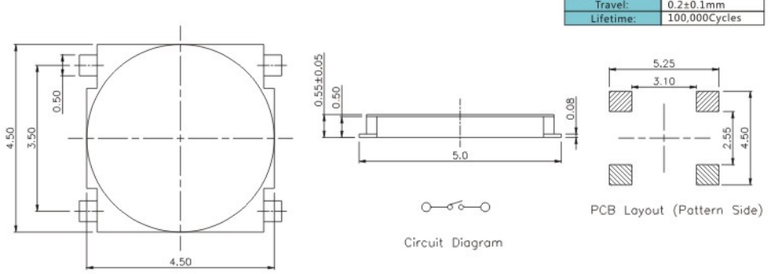

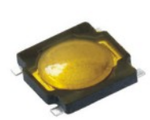

外型图 Dimensions

K2-1826FS

Rating:	50mA 12V DC
Opercting force:	60gf,250gf
Travel:	0.2±0.1mm
Lifetime:	100,000Cycles

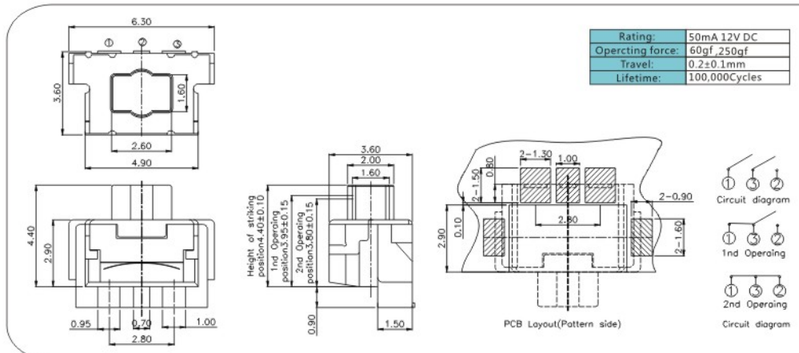

K2-1826FM

PART NO	H
F	3.0
J	3.5

Rating:	50mA 12V DC
Opercting force:	180gf,250gf
Travel:	0.15±0.1mm
Lifetime:	100,000Cycles

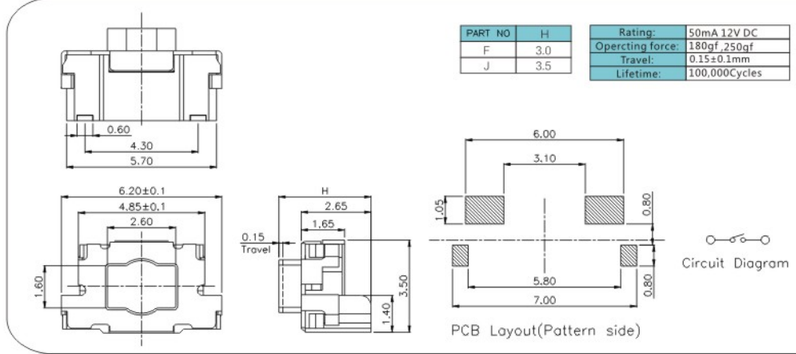

K2-1827SR

Rating:	50mA 12V DC
Opercting force:	100gf,180gf,250gf
Travel:	0.15±0.05mm
Lifetime:	100,000Cycles

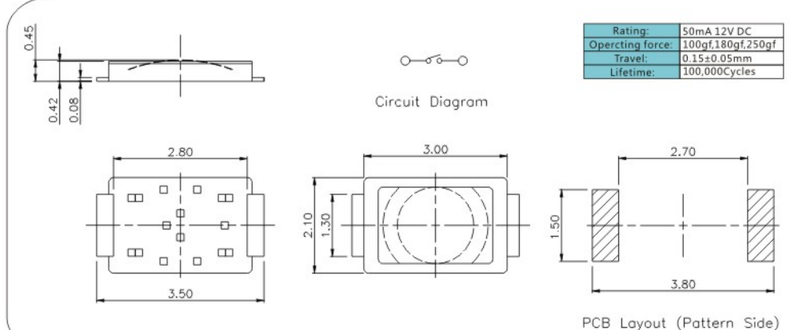

K2-1827SQ

Rating:	50mA 12V DC
Opercting force:	130gf,180gf,250gf
Travel:	0.15±0.05mm
Lifetime:	100,000Cycles

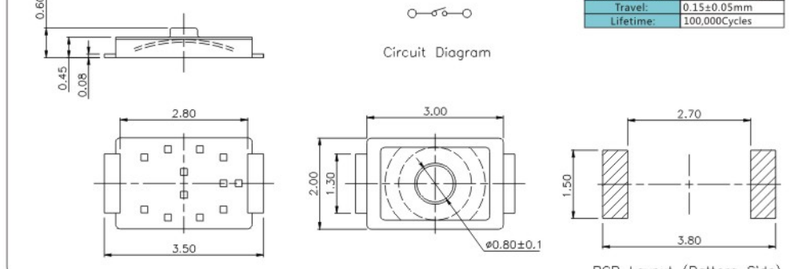

K2-1828UQ

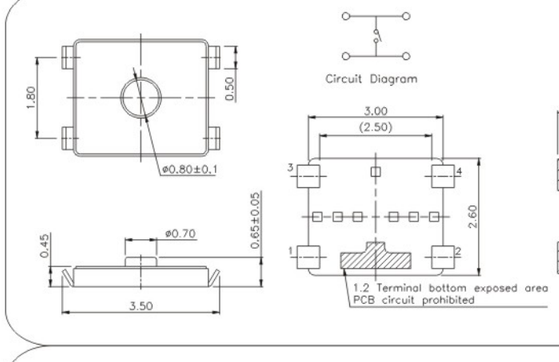

Rating:	DC 12V 50mA
Opercting force:	180,250gf
Travel:	0.15±0.05mm
Lifetime:	100,000 cycles

K2-1829UR

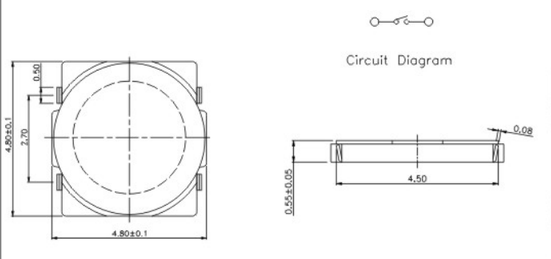

Rating:	DC 12V 50mA
Opercting force:	180,250gf
Travel:	0.2±0.1mm
Lifetime:	100,000 cycles

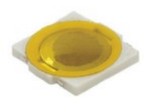

K2-1829UQ

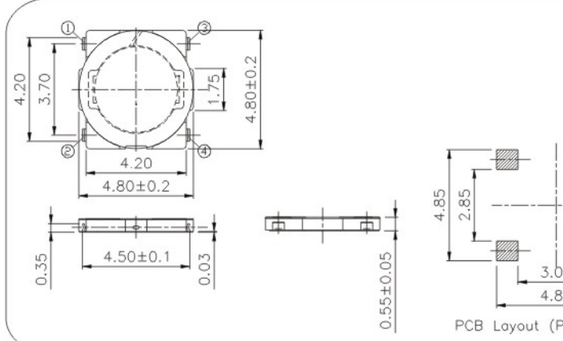

Rating:	50mA 12V DC
Opercting force:	180gf,250gf
Travel:	0.2±0.1mm
Lifetime:	100,000Cycles

K2-1830UQ

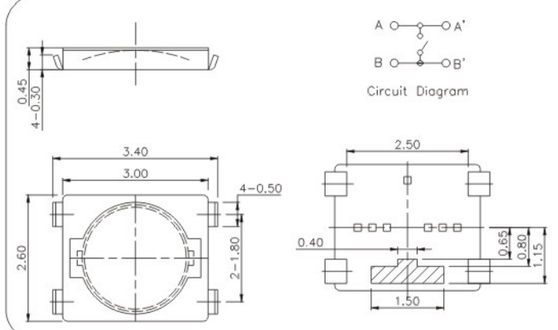

Rating:	50mA 12V DC
Opercting force:	180gf,250gf
Travel:	0.15±0.05mm
Lifetime:	100,000Cycles

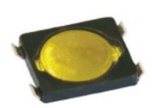

外型图 Dimensions

K2-1831SL

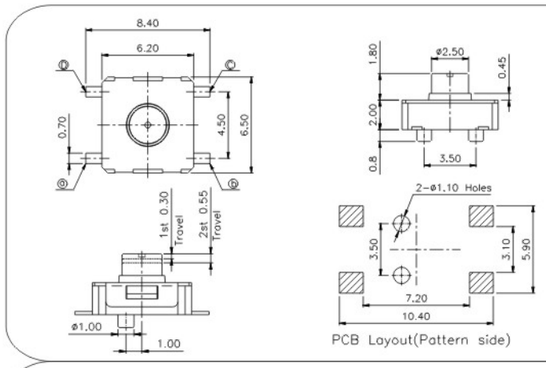

Rating:	50mA 12V DC
Opercting force:	1st 100gf,2nd 250gf
Travel:	1st 0.3mm,2nd0.55mm
Lifetime:	100,000Cycles

K2-1832UR

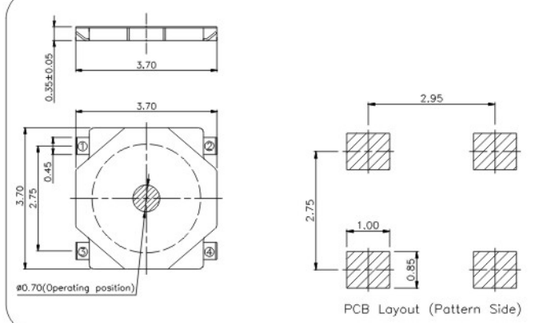

Rating:	50mA 12V DC
Opercting force:	180gf,250gf
Travel:	0.15±0.05mm
Lifetime:	100,000Cycles

K2-1833SL

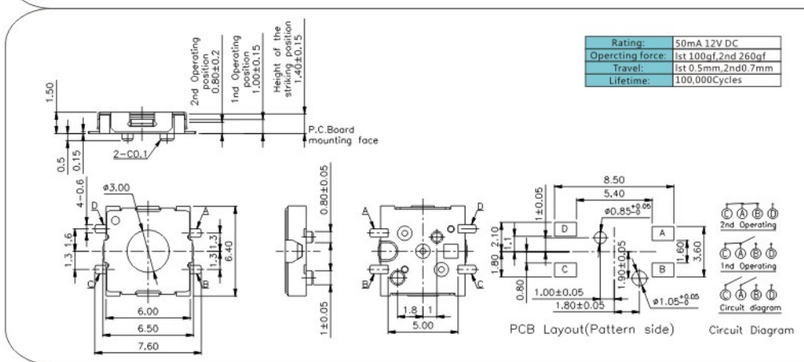

Rating:	50mA 12V DC
Opercting force:	1st 100gf,2nd 260gf
Travel:	1st 0.5mm,2nd0.7mm
Lifetime:	100,000Cycles

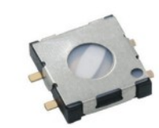

K2-1835UL

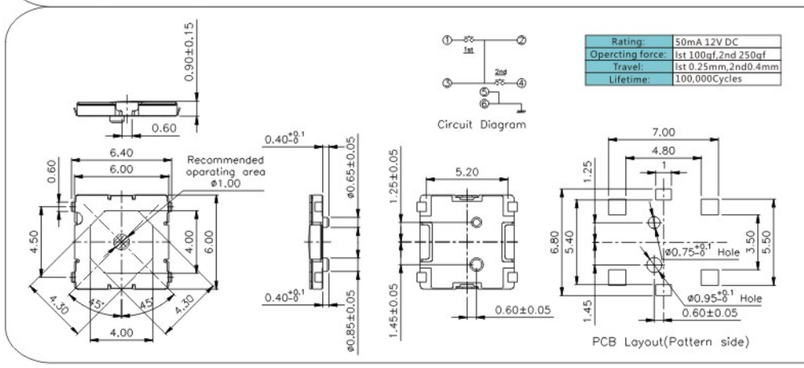

Rating:	50mA 12V DC
Opercting force:	1st 100gf,2nd 250gf
Travel:	1st 0.25mm,2nd0.4mm
Lifetime:	100,000Cycles

K2-1836UQ

Rating:	50mA 12V DC
Operating force:	180gf,250gf
Travel:	0.15±0.05mm
Lifetime:	100,000Cycles

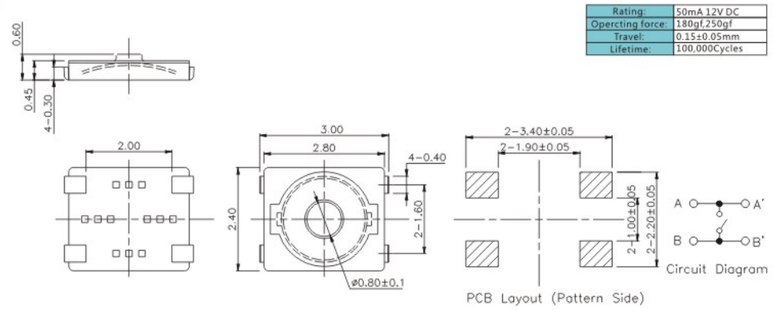

K2-1837UQ

Rating:	50mA 12V DC
Operating force:	180gf,350gf
Travel:	0.15±0.05 mm
Lifetime:	100,000Cycles

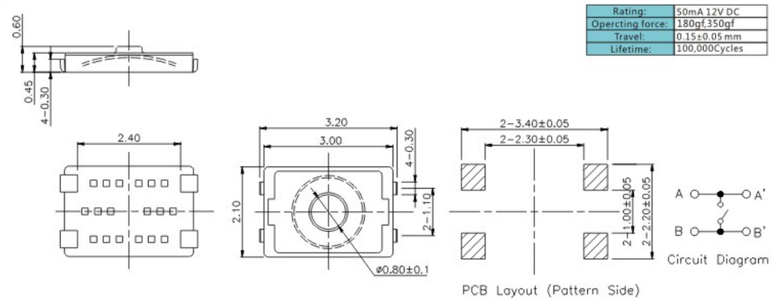

K2-1839DP

Rating:	50mA 12V DC
Operating force:	250gf,350gf
Travel:	0.3±0.1mm
Lifetime:	100,000Cycles

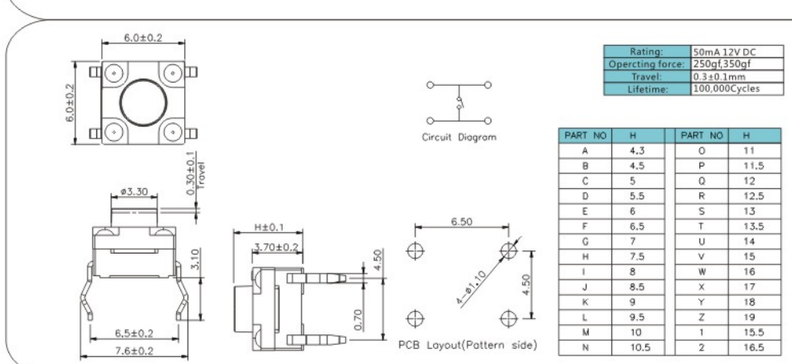

PART NO	H	PART NO	H
A	4.3	O	11
B	4.5	P	11.5
C	5	Q	12
D	5.5	R	12.5
E	6	S	13
F	6.5	T	13.5
G	7	U	14
H	7.5	V	15
I	8	W	16
J	8.5	X	17
K	9	Y	18
L	9.5	Z	19
M	10	1	15.5
N	10.5	2	16.5

IP67

K2-1839DQ

Rating:	DC 12V 50mA
Operating force:	250gf,350gf
Travel:	0.3±0.1mm
Lifetime:	100,000 cycles

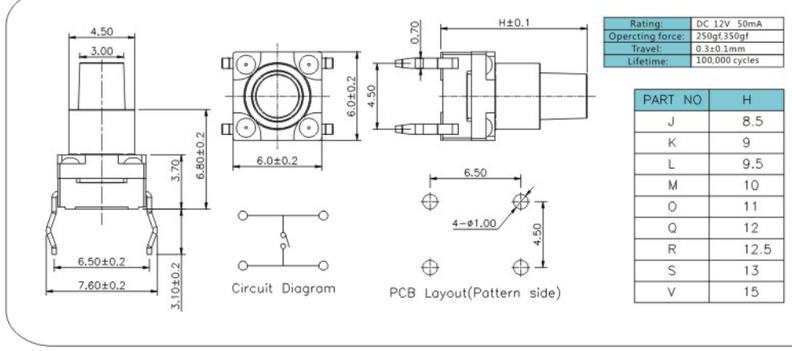

PART NO	H
J	8.5
K	9
L	9.5
M	10
O	11
Q	12
R	12.5
S	13
V	15

IP67

外型图 Dimensions

K2-1839DF

Rating:	DC 12V 10mA
Operating force:	250gf
Travel:	0.35±0.1mm
Lifetime:	80,000 cycles

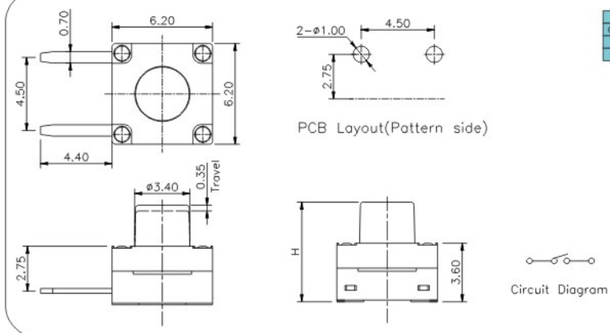

PART NO	H
B	4.5
C	5
D	5.5
E	6
F	6.5
G	7
H	7.5
I	8
J	8.5
K	9
L	9.5
M	10
N	10.5

IP67

K2-1839DZ

Rating:	50mA 12V DC
Operating force:	180gf,250gf
Travel:	0.3±0.1mm
Lifetime:	50,000Cycles

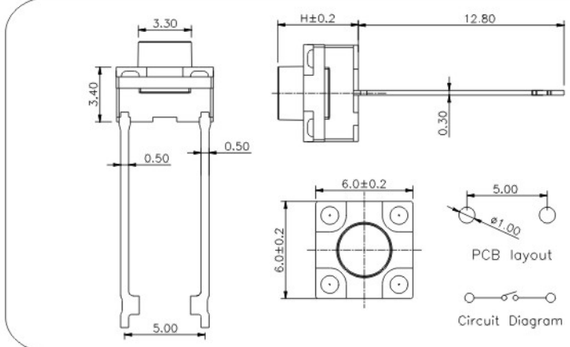

PART NO	H
A	4.3
B	4.5
C	5.0
D	5.5
E	6.0
F	6.5
G	7.0
H	7.5
I	8.0
J	8.5
K	9.0
L	9.5

K2-1839SP

Rating:	50mA 12V DC
Operating force:	250gf,350gf
Travel:	0.3±0.1mm
Lifetime:	100,000Cycles

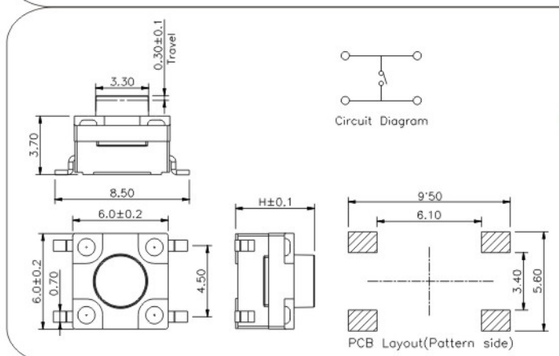

PART NO	H	PART NO	H
A	4.3	O	11
B	4.5	P	11.5
C	5	Q	12
D	5.5	R	12.5
E	6	S	13
F	6.5	T	13.5
G	7	U	14
H	7.5	V	15
I	8	W	16
J	8.5	X	17
K	9	Y	18
L	9.5	Z	19
M	10	1	15.5
N	10.5	2	16.5

IP67

K2-1841DP

Rating:	50mA 12V DC
Operating force:	250gf,350gf
Travel:	0.35±0.1mm
Lifetime:	100,000Cycles

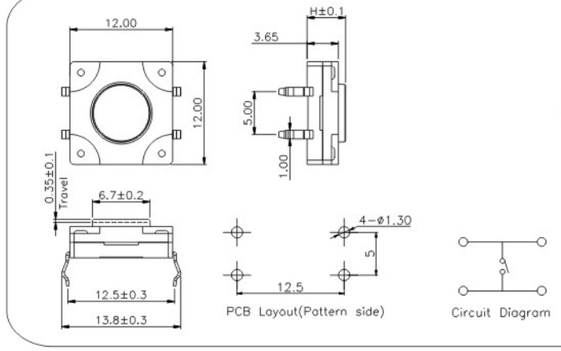

PART NO	H	PART NO	H
A	4.3	L	9.5
B	4.5	M	10
C	5.0	N	10.5
D	5.5	O	11
E	6	P	11.5
F	6.5	Q	12
G	7	R	12.5
H	7.5	S	13
I	8	T	13.5
J	8.5	U	14
K	9	V	15

IP67

K2-1841DT

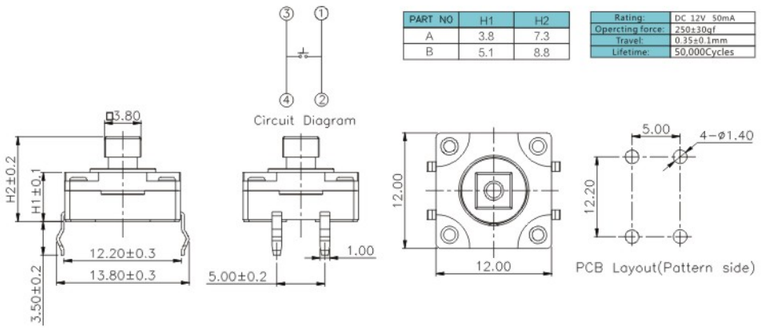

PART NO	H1	H2
A	3.8	7.3
B	5.1	8.8

Rating:	DC 12V 50mA
Opercting force:	250±30gf
Travel:	0.35±0.1mm
Lifetime:	50,000Cycles

IP67

K2-1841ST

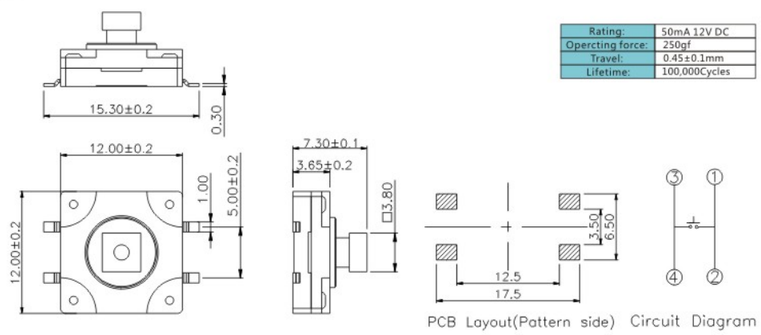

Rating:	50mA 12V DC
Opercting force:	250gf
Travel:	0.45±0.1mm
Lifetime:	100,000Cycles

IP67

K2-1841SP

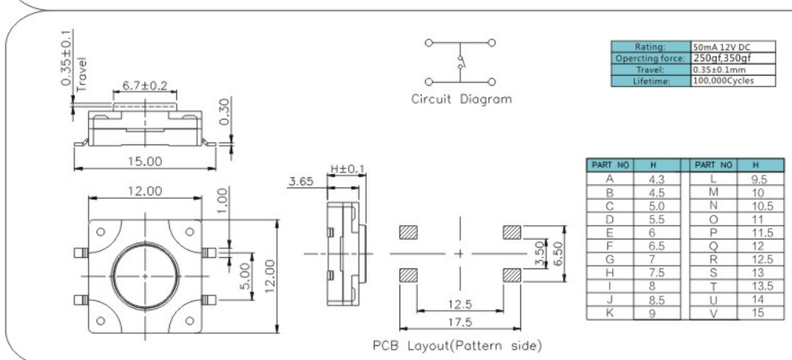

Rating:	50mA 12V DC
Opercting force:	250gf,350gf
Travel:	0.35±0.1mm
Lifetime:	100,000Cycles

PART NO	H	PART NO	H
A	4.3	L	9.5
B	4.5	M	10
C	5.0	N	10.5
D	5.5	O	11
E	6	P	11.5
F	6.5	Q	12
G	7	R	12.5
H	7.5	S	13
I	8	T	13.5
J	8.5	U	14
K	9	V	15

IP67

K2-1842AP

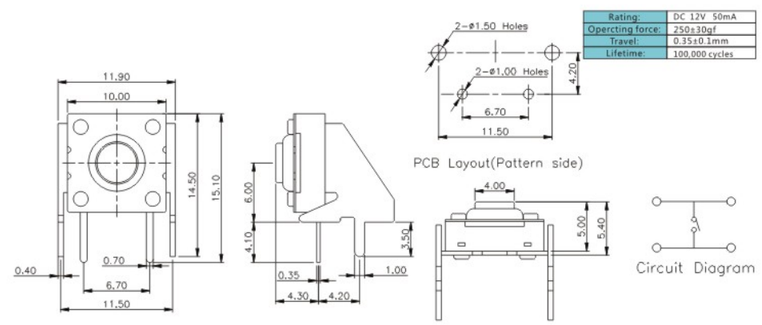

Rating:	DC 12V 50mA
Opercting force:	250±30gf
Travel:	0.35±0.1mm
Lifetime:	100,000 cycles

IP68

外型图 Dimensions

K2-1842DP

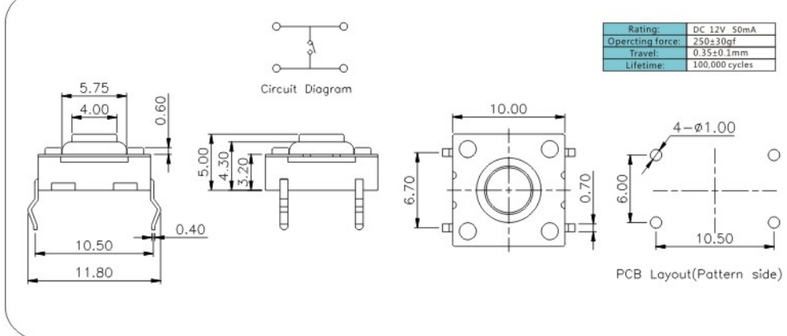

Rating:	DC 12V 50mA
Opercting force:	250±30gf
Travel:	0.35±0.1mm
Lifetime:	100,000 cycles

IP68

K2-1842SP

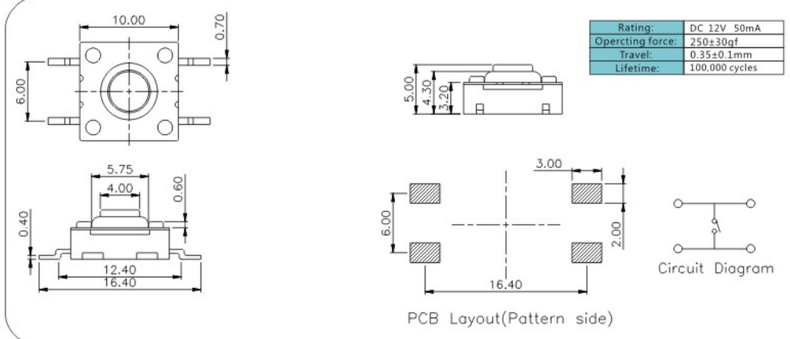

Rating:	DC 12V 50mA
Opercting force:	250±30gf
Travel:	0.35±0.1mm
Lifetime:	100,000 cycles

IP68

K2-1843DF

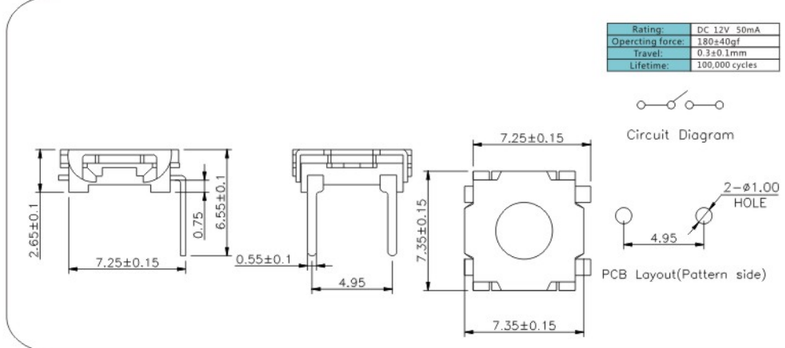

Rating:	DC 12V 50mA
Opercting force:	180±40gf
Travel:	0.3±0.1mm
Lifetime:	100,000 cycles

IP66

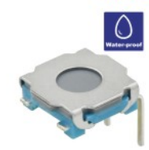

K2-1843DP

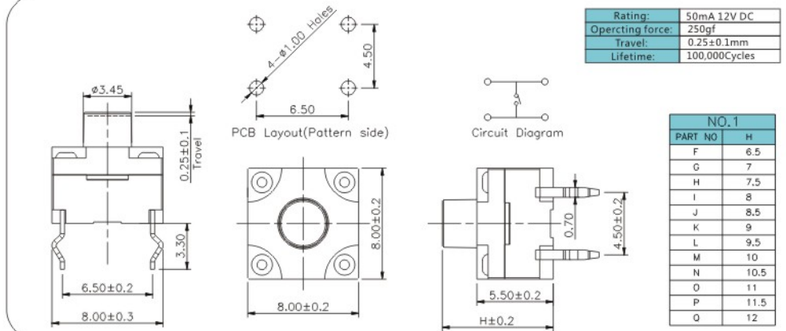

Rating:	50mA 12V DC
Opercting force:	250gf
Travel:	0.25±0.1mm
Lifetime:	100,000Cycles

NO.1

PART NO	H
F	6.5
G	7
H	7.5
I	8
J	8.5
K	9
L	9.5
M	10
N	10.5
O	11
P	11.5
Q	12

IP67

K2-1843SP

Rating:	DC 12V 50mA
Opercting force:	250gf
Travel:	0.35±0.1mm
Lifetime:	100,000Cycles

IP67

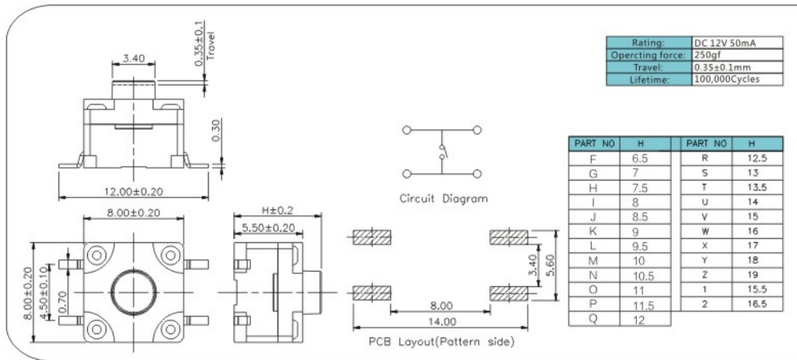

PART NO	H	PART NO	H
F	6.5	R	12.5
G	7	S	13
H	7.5	T	13.5
I	8	U	14
J	8.5	V	15
K	9	W	16
L	9.5	X	17
M	10	Y	18
N	10.5	Z	19
O	11	1	15.5
P	11.5	2	16.5
Q	12		

K2-1844DP

Rating:	50mA 12V DC
Opercting force:	250gf,350gf
Travel:	0.35±0.1mm
Lifetime:	100,000Cycles

IP67

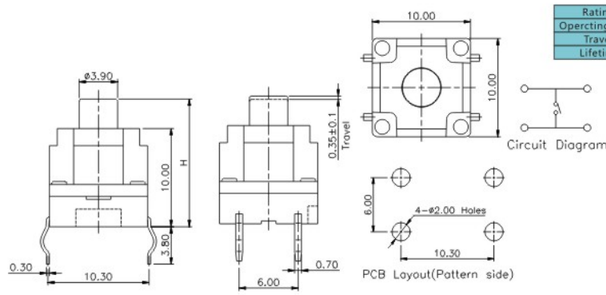

PART NO	H
S	13
T	13.5
U	14
V	15
W	16
X	17
Y	18
Z	19
1	15.5
2	16.5
3	14.5
4	17.5
5	23.0

K2-1845SA

PART NO.	
K2-1845SA	K2-1845SN

Rating:	50mA 12V DC
Opercting force:	180gf,250gf
Travel:	0.25±0.1mm
Lifetime:	100,000Cycles

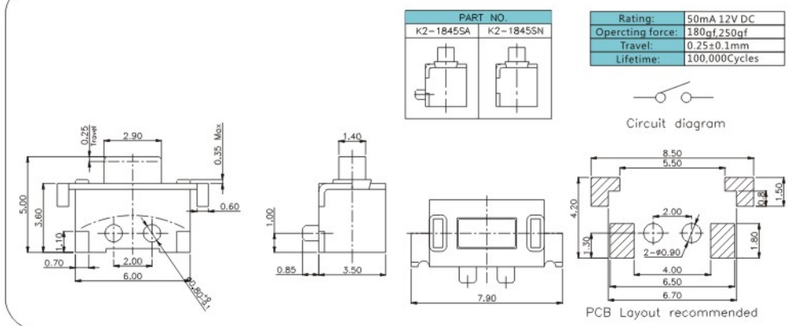

K2-1845SD

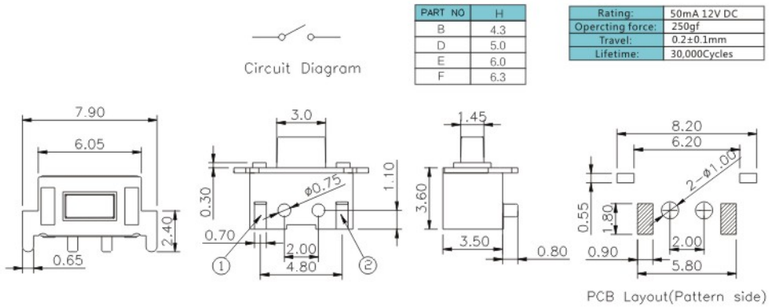

PART NO	H
B	4.3
D	5.0
E	6.0
F	6.3

Rating:	50mA 12V DC
Opercting force:	250gf
Travel:	0.2±0.1mm
Lifetime:	30,000Cycles

外型图 Dimensions

K2-1846DF

Rating:	50mA 12V DC
Opercting force:	250gf,350gf
Travel:	0.35±0.1mm
Lifetime:	100,000Cycles

IP66

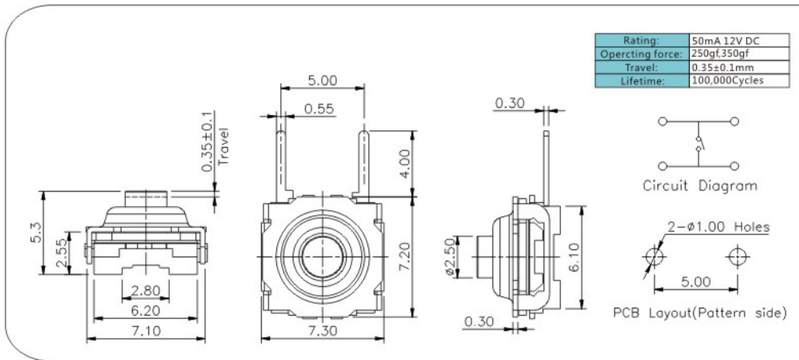

K2-1847FT

Rating:	50mA 12V DC
Opercting force:	180gf,250gf
Travel:	0.2±0.1mm
Lifetime:	100,000Cycles

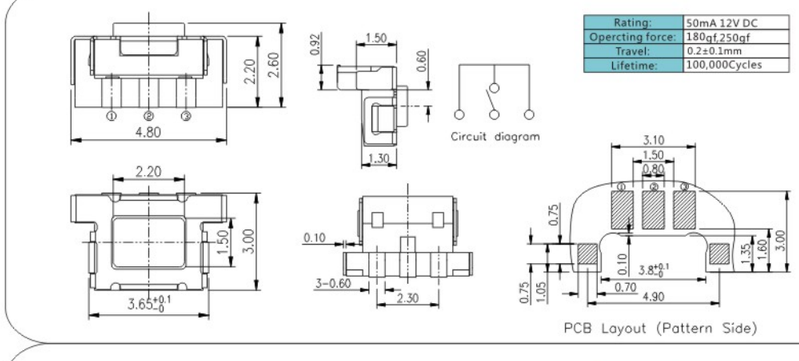

K2-1848FP

Rating:	DC 50mA 12V
Opercting force:	180gf , 250gf
Travel:	0.15±0.05mm
Lifetime:	600,000 cycles

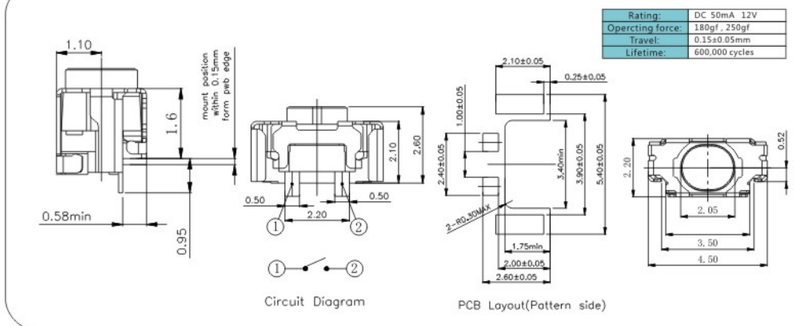

K2-1849SN

Rating:	DC 20mA 15V
Opercting force:	180gf , 250gf
Travel:	0.12±0.1mm
Lifetime:	100,000Cycles

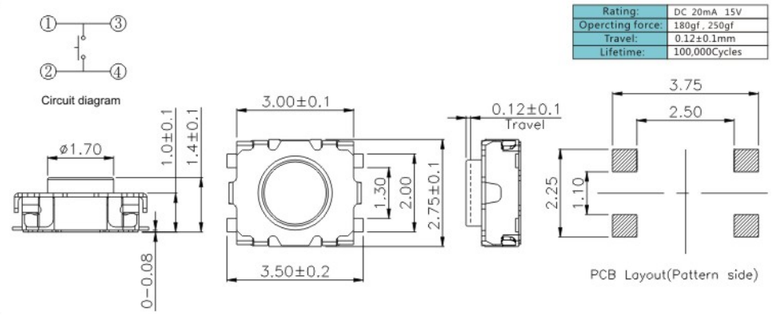

K2-1850DT

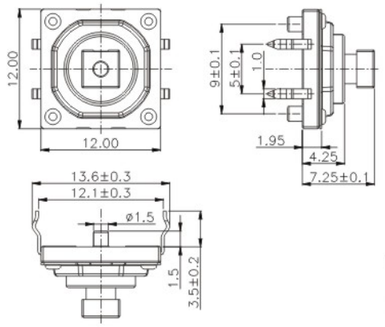

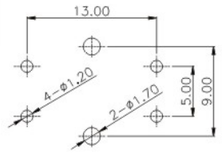

PCB Layout(Pattern side)

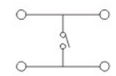

Circuit Diagram

Rating:	50mA 12V DC
Opercting force:	180gf,250gf
Travel:	0.25±0.1mm
Lifetime:	100,000Cycles

K2-1851SN

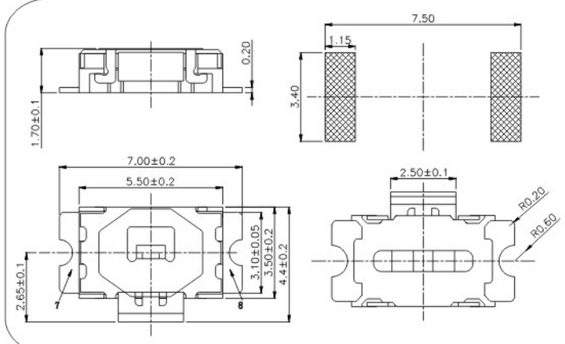

Circuit Diagram

Rating:	50mA 12V DC
Opercting force:	180gf,250gf
Travel:	0.2±0.1mm
Lifetime:	100,000Cycles

K2-1852SP

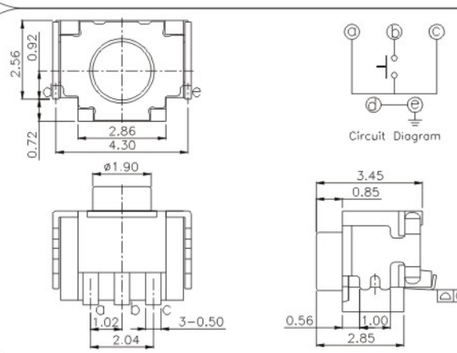

Circuit Diagram

PCB Layout(Top View)

Rating:	50mA 12V DC
Opercting force:	100gf
Travel:	0.45±0.2mm
Lifetime:	100,000Cycles

K2-6625SP

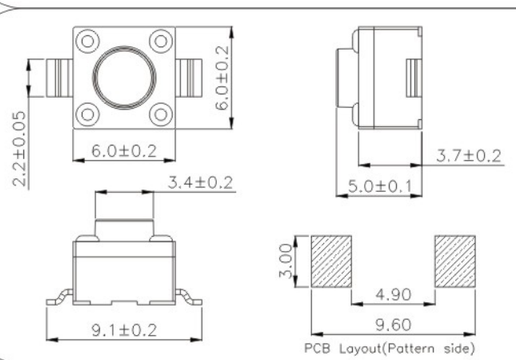

PCB Layout(Pattern side)

Circuit Diagram

Rating:	DC 12 50mA
Forcel:	250±50gf
Travel:	0.25±0.1mm
Life:	100,000Cycles

外型图 Dimensions

K2-6639SP

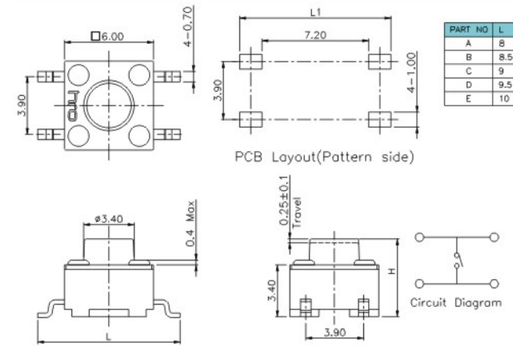

PCB Layout(Pattern side)

Circuit Diagram

PART NO	L	L1
A	8	10
B	8.5	11
C	9	11
D	9.5	12
E	10	12

Rating:	50mA 12V DC
Opercting force:	130gf,180gf,250gf
Travel:	0.25±0.1mm
Lifetime:	1,000,000Cycles

PART NO	H	PART NO	H
A	4.3	O	11
B	4.5	P	11.5
C	5	Q	12
D	5.5	R	12.5
E	6	S	13
F	6.5	T	13.5
G	7	U	14
H	7.5	V	15
I	8	W	16
J	8.5	X	17
K	9	Y	18
L	9.5	Z	19
M	10	1	15.5
N	10.5	2	16.5

K2-6639DP

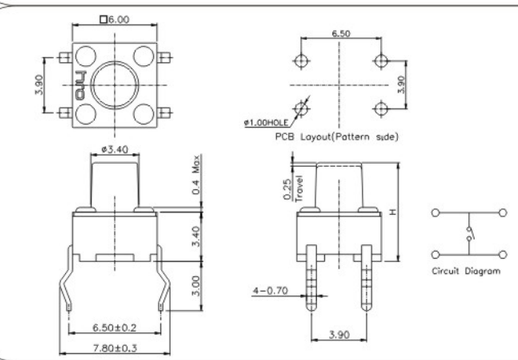

PCB Layout(Pattern side)

Circuit Diagram

Rating:	50mA 12V DC
Opercting force:	130gf,180gf,250gf
Travel:	0.25±0.1mm
Lifetime:	1,000,000Cycles

PART NO	H	PART NO	H
A	4.3	O	11
B	4.5	P	11.5
C	5	Q	12
D	5.5	R	12.5
E	6	S	13
F	6.5	T	13.5
G	7	U	14
H	7.5	V	15
I	8	W	16
J	8.5	X	17
K	9	Y	18
L	9.5	Z	19
M	10	1	15.5
N	10.5	2	16.5

K2-6645DP

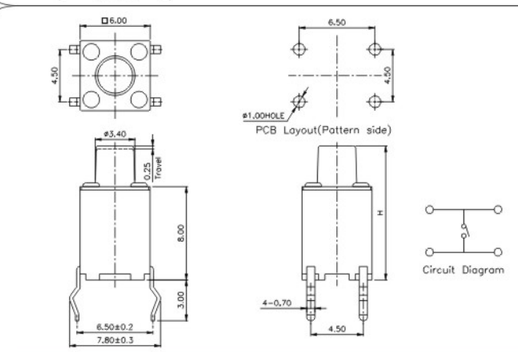

PCB Layout(Pattern side)

Circuit Diagram

Rating:	50mA 12V DC
Opercting force:	130gf,180gf,250gf
Travel:	0.25±0.1mm
Lifetime:	1,000,000Cycles

PART NO	H	PART NO	H
O	11	P	11.5
Q	12	R	12.5
S	13	T	13.5
U	14	3	14.5
V	15	1	15.5
W	16	2	16.5
X	17	4	17.5
Y	18		

K2-6645SP

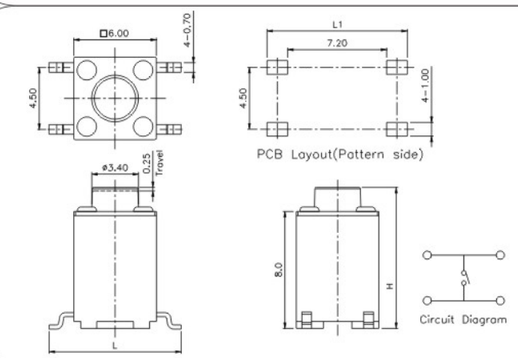

PCB Layout(Pattern side)

Circuit Diagram

Rating:	50mA 12V DC
Opercting force:	130gf,180gf,250gf
Travel:	0.25±0.1mm
Lifetime:	1,000,000Cycles

PART NO	L	L1
A	8	10
B	8.5	11
C	9	11
D	9.5	12
E	10	12

PART NO	H	PART NO	H
O	11	P	11.5
Q	12	R	12.5
S	13	T	13.5
U	14	3	14.5
V	15	1	15.5
W	16	2	16.5
X	17	4	17.5
Y	18		

Tact Switch 轻触开关

K2-8808SP

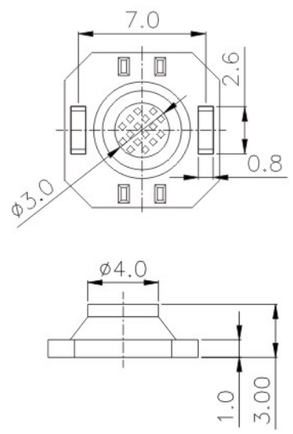

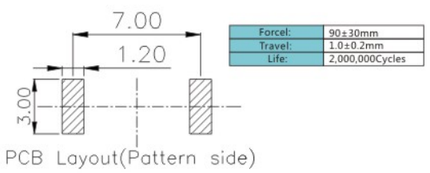

PCB Layout(Pattern side)

Forcel:	90±30mm
Travel:	1.0±0.2mm
Life:	2,000,000Cycles

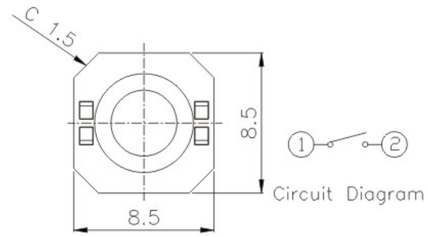

Circuit Diagram

K2-8810SP

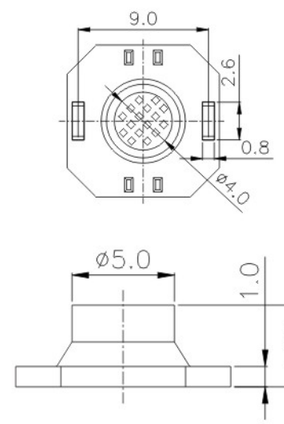

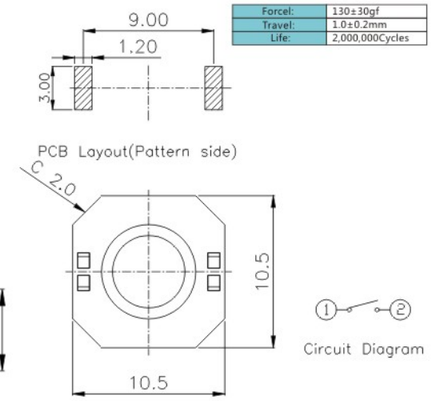

PCB Layout(Pattern side)

Forcel:	130±30gf
Travel:	1.0±0.2mm
Life:	2,000,000Cycles

Circuit Diagram

K2-8816SP

Rating:	DC 50mA 12V
Operating force:	400gf,700gf
Travel:	0.9±0.1mm
Lifetime:	500,000 cycles

IP67

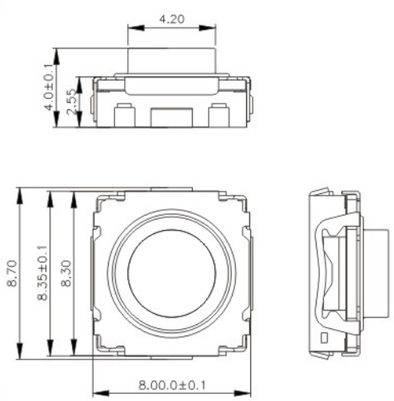

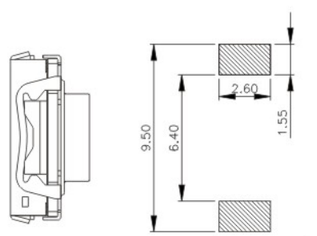

PCB Layout(Pattern side)

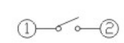

Circuit Diagram

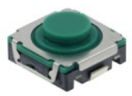

检测开关 >>
Detector Switch

Detector Switch 检测开关

特征 Features

◆ 具备体积小，重量轻，多种功能。
Small size and light weight

◆ 寿命长，多种操作力可选择。
It has life and more operating forces can be a pplied such as lightly force

规格参数 Basic specfication parameter

电气特性 Electrical Characteristics	额定负荷 Rating	见具体产品规格 See detail spec
	接触阻抗 Contact Resistance	≤100mΩ
	绝缘阻抗 Insulation Resistance	≥100mΩ DC500V
	绝缘耐电压 Withstand voltage	AC500V 1Minute
	电气寿命 Electrical Life	见具体产品规格 See detail spec
机械/可靠性特性 Mechanical/reliability Characteristics	操作力 Operating force range	见具体产品规格 See detail spec
	机械寿命 Mechanical Life	见具体产品规格 See detail spec
	使用温度 Operating temperature range	-25°C+80°C
	使用湿度 Ambient humidity used	≤85%RH
	可焊性 Solder ability	245°C ± 5°C 3S ± 0.5S
	耐焊接热 Withstand Soldering temperature	260°C ± 5°C 3S ± 1S

焊接条件 Welding conditions

◆ 手工焊 Hand soldering
使用30瓦烙铁，烙铁尖端温度不超过350℃，焊接时间3S。
Use a soldering iron of 30 watts, Controlled at 350°C approximately 3 seconds while solder applying

◆ 波峰焊/回流焊 Wave soldering/Reflow Soldering
峰值温度不超过260℃，焊接时间不超过5S（焊接温度曲线参考如下）。
The peak temperature of the wave oven should be set to 260°C max.Condition for soldering Temperature Profile

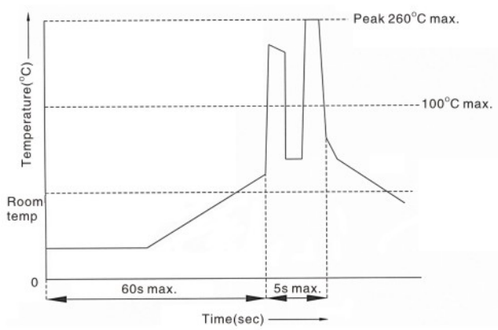

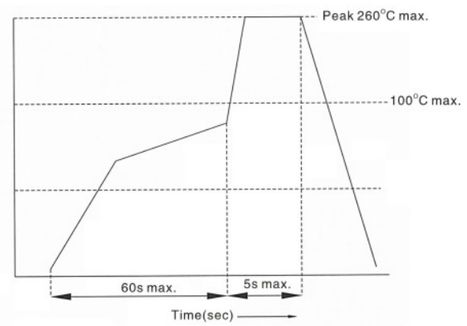

用途 Applications

◆ 广泛应用于鼠标、手机、照相机、录相机、立体声耳机、汽车音响设备，个人数字产品等领域。
They can operate all types of computer mouse,Mobile phones,cameras,VCR,stereo and car radio equipment and PDAs

外型图 Dimensions

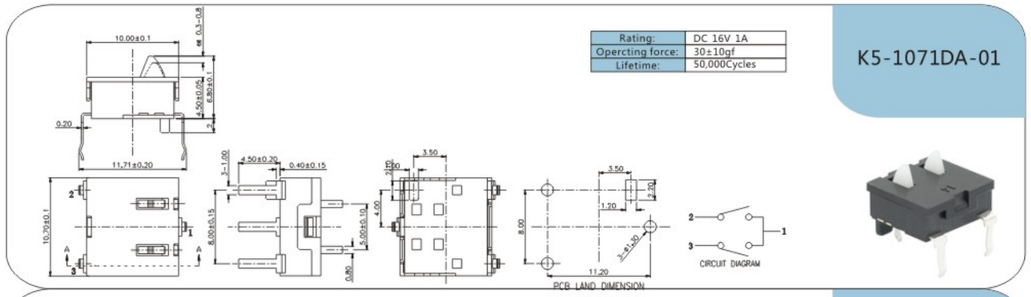

K5-1071DA-01

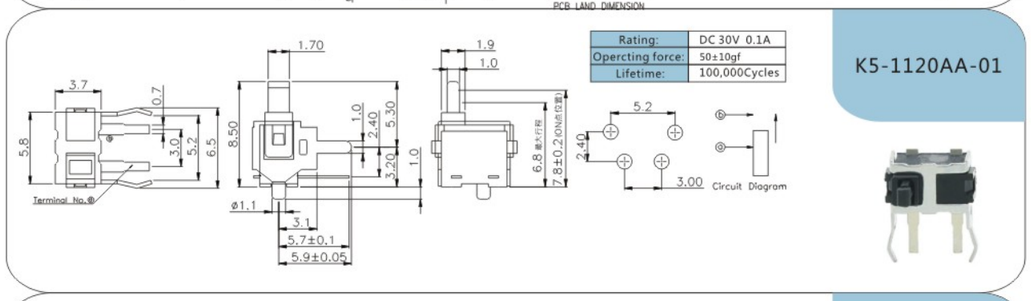

K5-1120AA-01

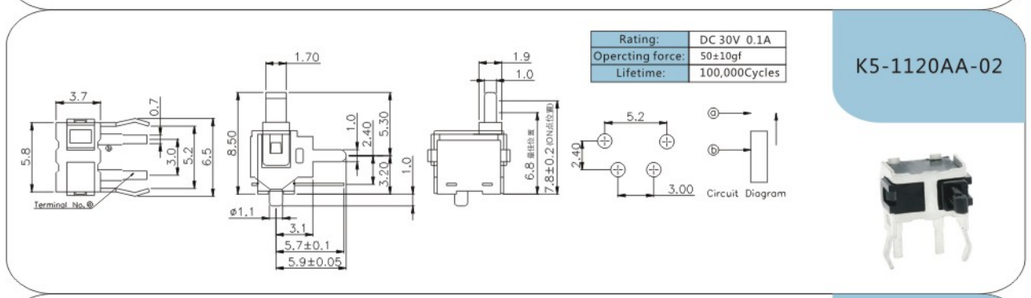

K5-1120AA-02

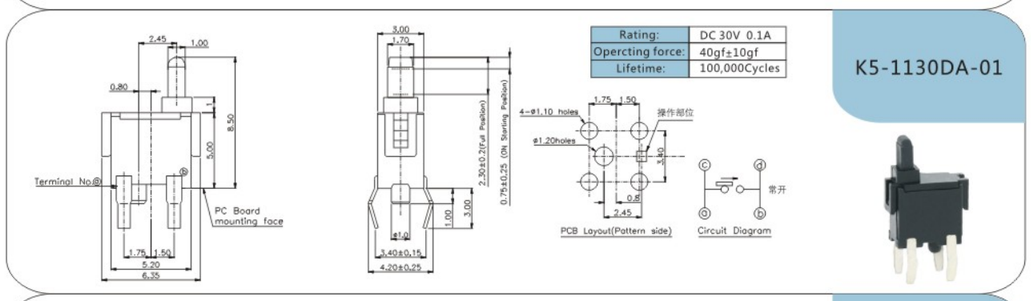

K5-1130DA-01

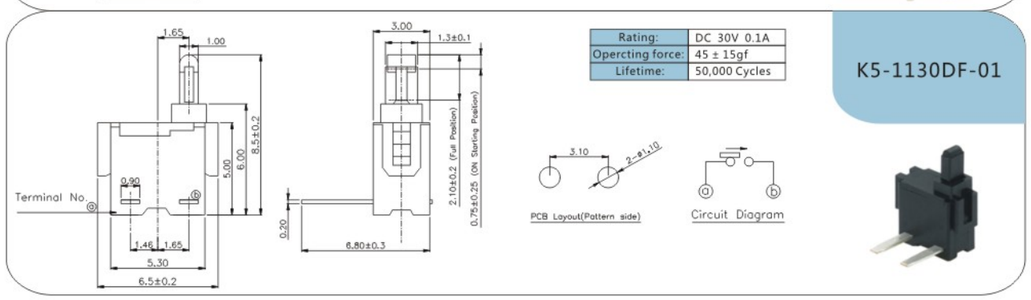

K5-1130DF-01

K5-1130SG-01

PART NO	H
K5-1130SG-01	8.5
K5-1130SG-02	9.5
K5-1130SG-03	11.0

Rating:	DC 5V 1mA
Opercting force:	36gf Max
Lifetime:	100,000Cycles

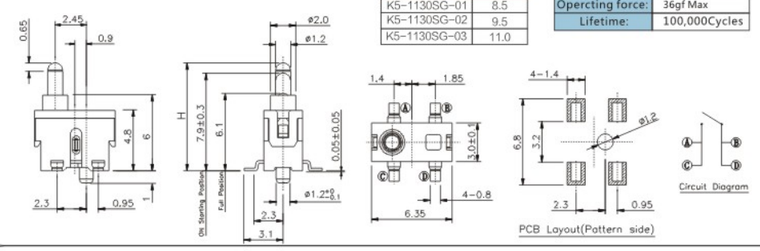

K5-1130SA-01

Rating:	DC 30V 0.1A
Opercting force:	40gf±10gf
Lifetime:	100,000Cycles

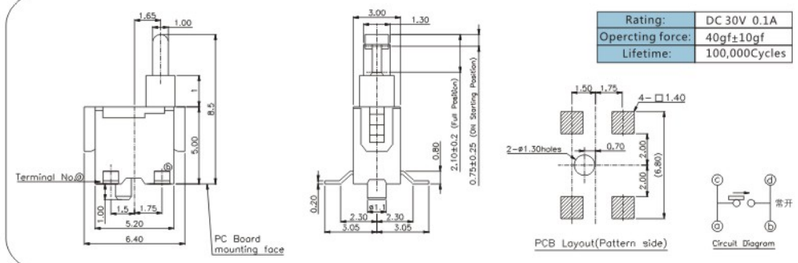

K5-1215DA-01

PART NO.	
K5-1215DA-01	K5-1215DN-01

Rating:	DC 30V 0.1A
Opercting force:	30gf±10gf
Lifetime:	100,000Cycles

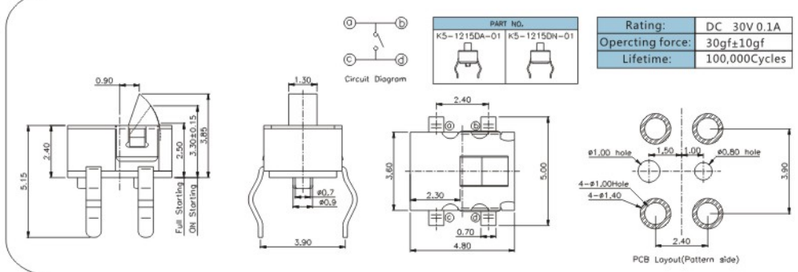

K5-1215SA-01

K5-1215SA-01	K5-1215SN-01

Rating:	DC 30V 0.1A
Opercting force:	30gf ± 10gf
Lifetime:	100,000 Cycles

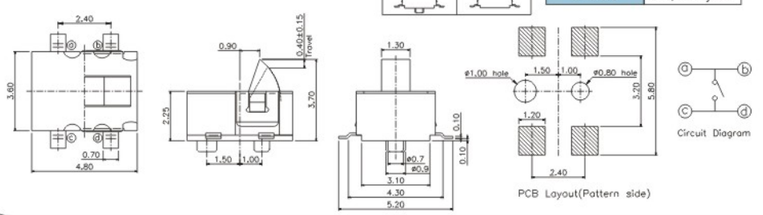

K5-1216SA-01

Rating:	DC 12V 50mA
Opercting force:	30 ± 20gf
Lifetime:	100,000 Cycles

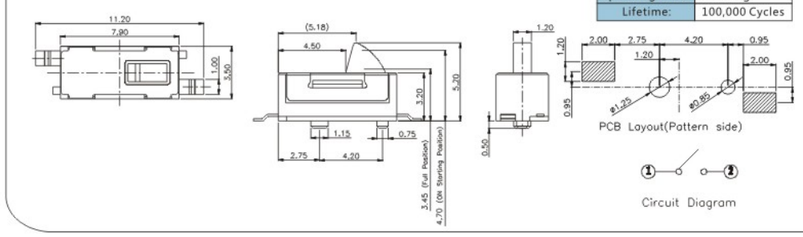

外型图 Dimensions

K5-1217SA-01

Rating:	DC 5V 1mA
Opercting force:	31gf Max
Lifetime:	50,000Cycles

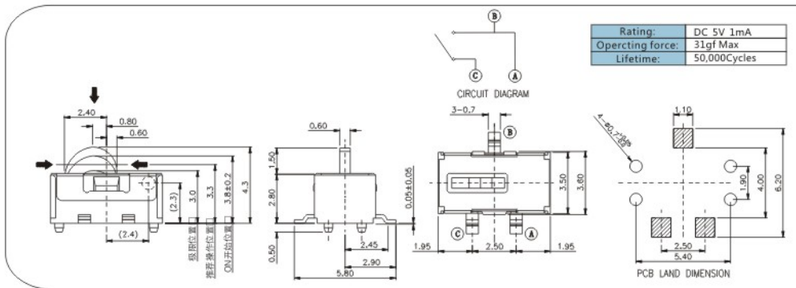

K5-1217SA-02

Rating:	DC 5V 1mA
Opercting force:	31gf Max
Lifetime:	50,000Cycles

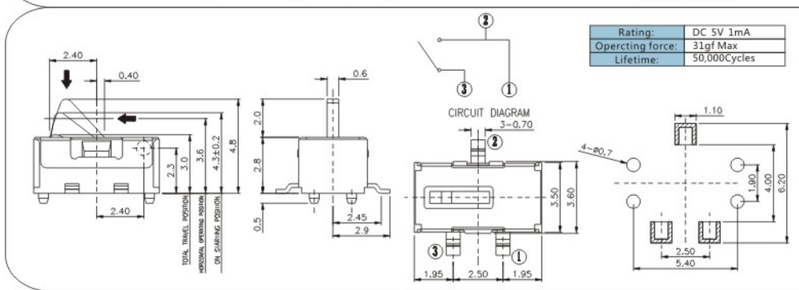

K5-1218SA-01

Rating:	DC 5V 0.1A
Opercting force:	30gf Max
Lifetime:	50,000Cycles

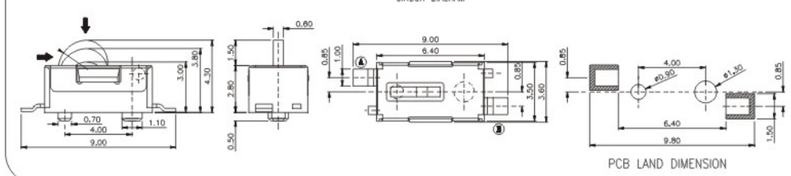

K5-1286DA-02

Rating:	DC 30V 0.1A
Opercting force:	40±10gf
Lifetime:	100,000 Cycles

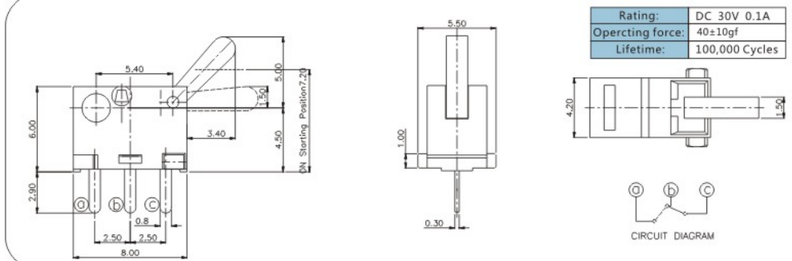

K5-1609DA-01

Rating:	DC30V 0.1A
Opercting force:	50gf Max
Lifetime:	100,000Cycles

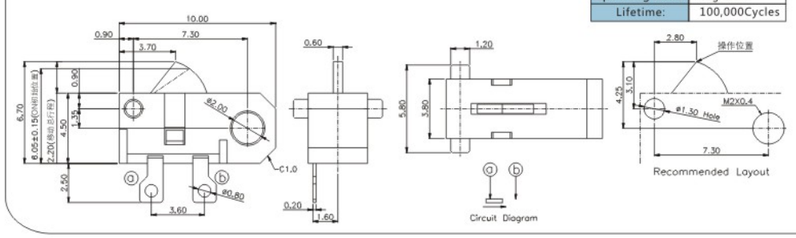

K5-1610DA-01

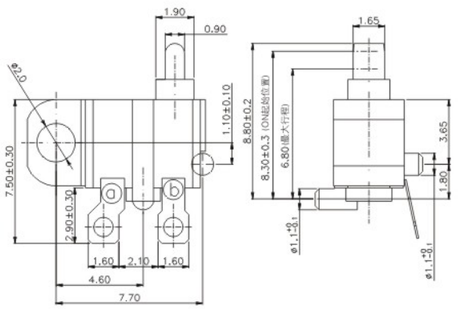

Rating:	DC 30V 0.1A
Operating force:	35±15gf
Lifetime:	100,000Cycles

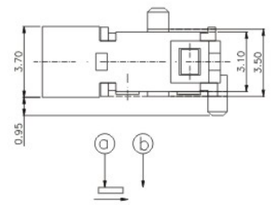

K5-1610DA-02

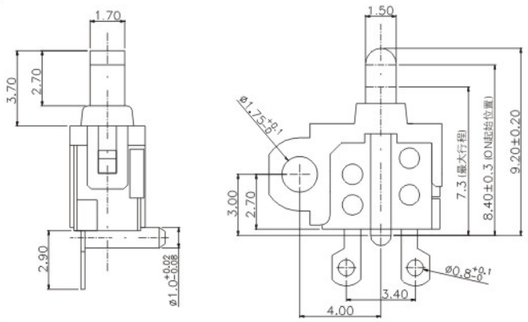

Rating:	DC 30V 0.1A
Operating force:	50gf±10gf
Lifetime:	50,000Cycles

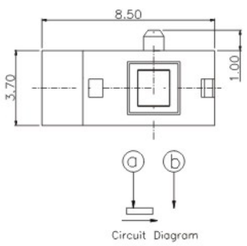

K5-1611SA-01

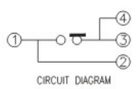

PART NO.	H	A	B	C
K5-1611SA-01	6.5±0.3	4.85Max	5.15	6.05
K5-1611SA-02	8.0±0.3	6.35Max	6.65	7.55

Rating:	DC30V 0.1A
Operating force:	20gf±10gf
Lifetime:	100,000Cycles

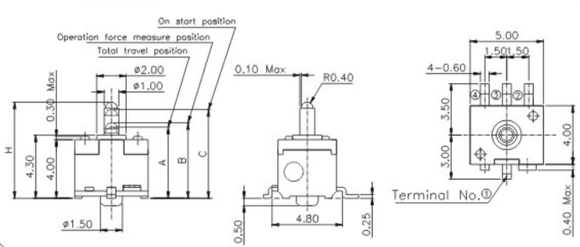

K5-1616SA-01

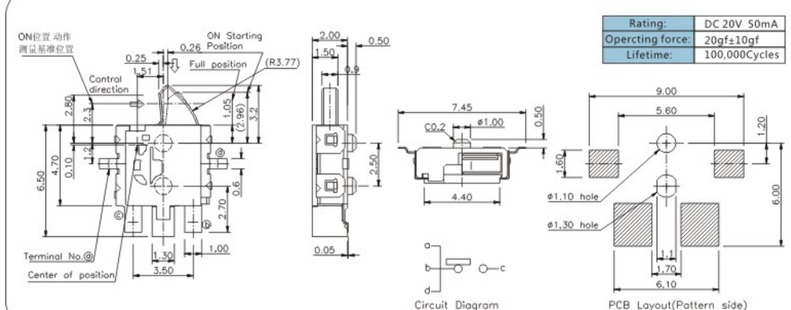

Rating:	DC 20V 50mA
Operating force:	20gf±10gf
Lifetime:	100,000Cycles

外型图 Dimensions

K5-1616SA-02

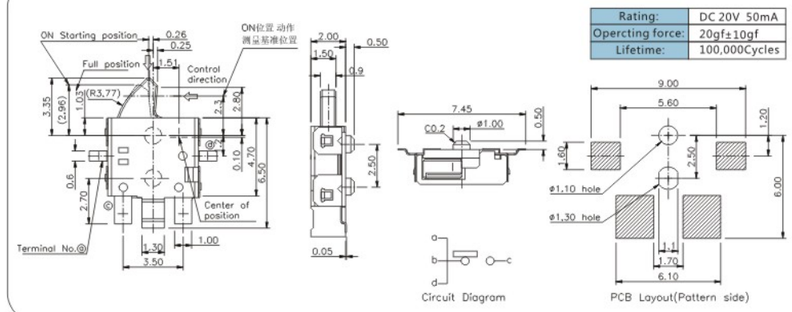

Rating:	DC 20V 50mA
Operating force:	20gf±10gf
Lifetime:	100,000Cycles

K5-1617SA-01

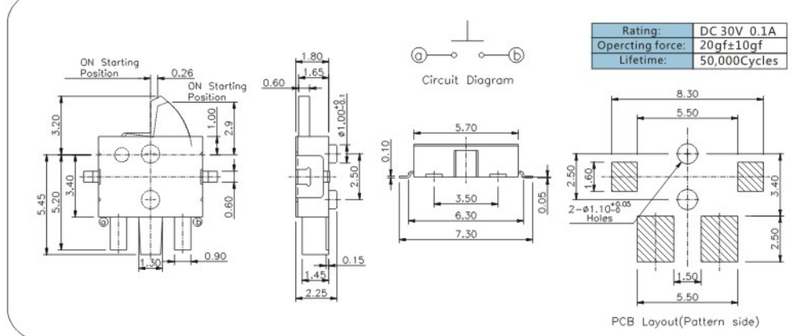

Rating:	DC 30V 0.1A
Operating force:	20gf±10gf
Lifetime:	50,000Cycles

K5-1617SA-02

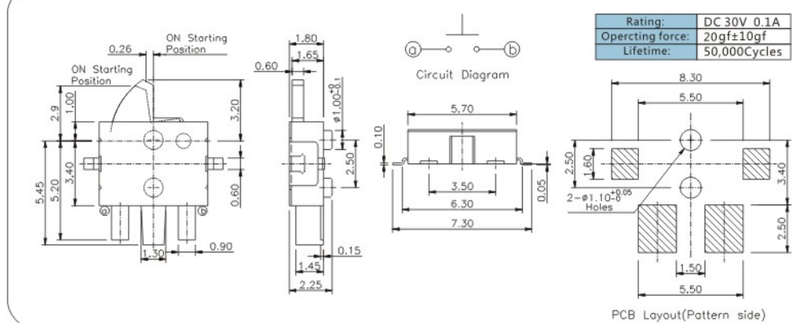

Rating:	DC 30V 0.1A
Operating force:	20gf±10gf
Lifetime:	50,000Cycles

K5-1617SA-03

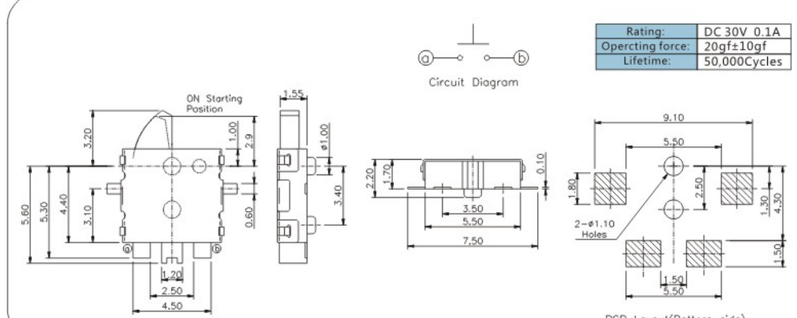

Rating:	DC 30V 0.1A
Operating force:	20gf±10gf
Lifetime:	50,000Cycles

K5-1617SA-04

Rating:	DC 30V 0.1A
Operating force:	20gf±10gf
Lifetime:	50,000Cycles

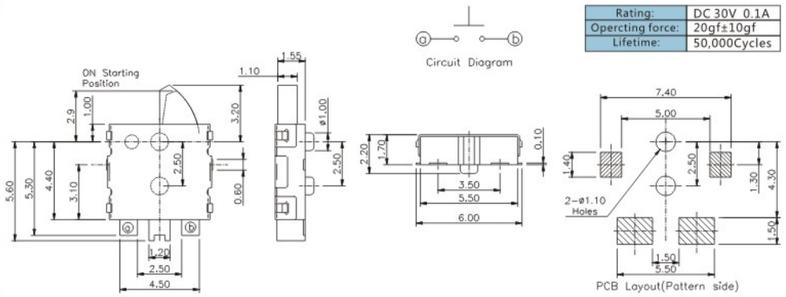

K5-1617SA-06

Rating:	DC 12V 50mA
Operating force:	20gf±10gf
Lifetime:	100,000Cycles

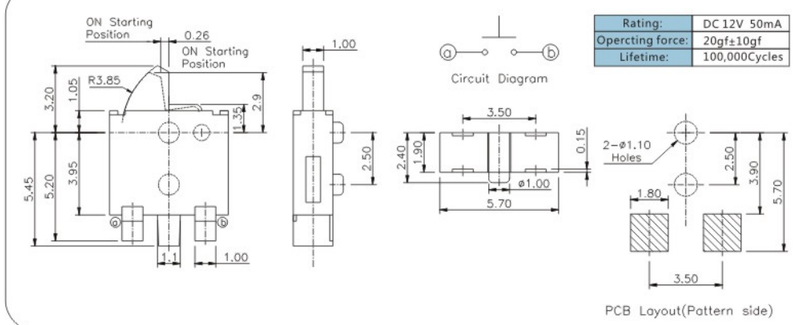

K5-1618UA-01

K5-1618UA-01	K5-1618UN-01

Rating:	DC 12V 50mA
Operating force:	20gf±10gf
Lifetime:	100,000Cycles

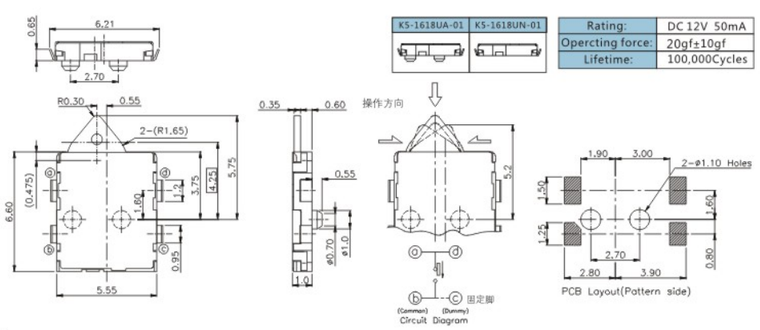

K5-1619UA-01

K5-1619UA-01	K5-1619UN-01

Rating:	DC 12V 50mA
Operating force:	20gf±10gf
Lifetime:	100,000Cycles

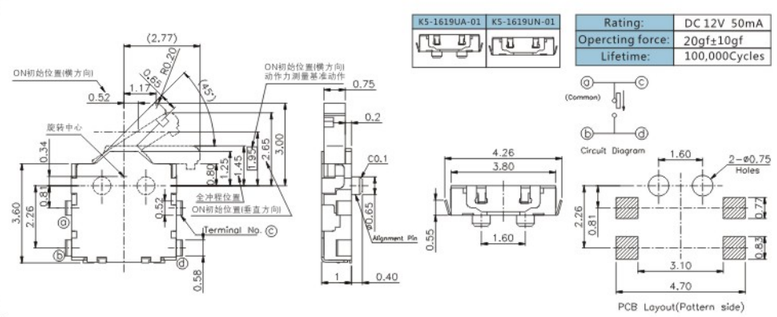

外型图 Dimensions

K5-1619UA-02

K5-1619UA-02	K5-1619UN-02

Rating:	DC 12V 50mA
Operating force:	20gf±10gf
Lifetime:	100,000Cycles

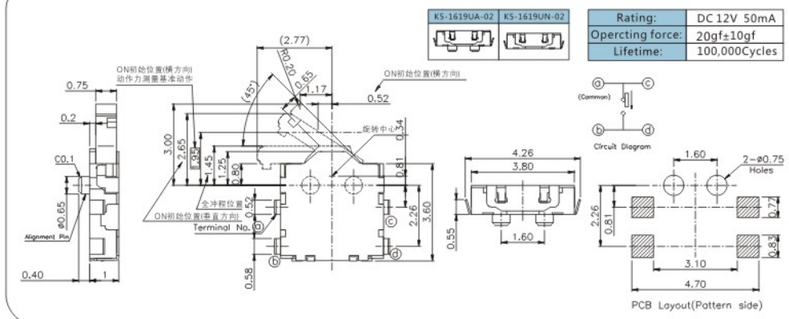

K5-1620UA-01

K5-1620UA-01	K5-1620UN-01

Rating:	DC 12V 50mA
Operating force:	30gf±10gf
Lifetime:	100,000Cycles

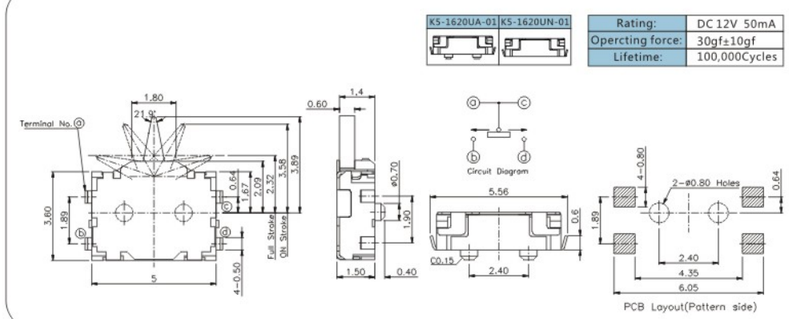

K5-1621UA-01

K5-1621UA-01	K5-1621UN-01

Rating:	DC 30V 0.1A
Operating force:	40±20gf
Lifetime:	100,000 Cycles

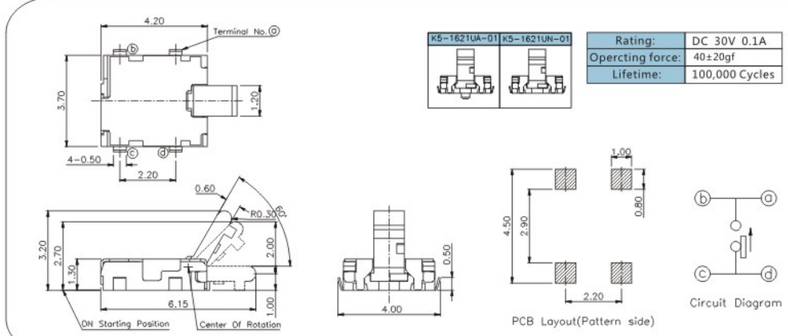

K5-1621SA-01

Rating:	DC 12V 50mA
Operating force:	40±20gf
Lifetime:	50,000Cycles

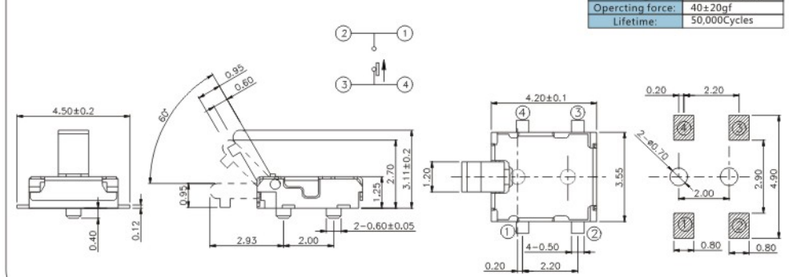

K5-1624SA-01

Rating:	DC 12V 50mA
Opercting force:	120 ± 30gf
Lifetime:	100,000 Cycles

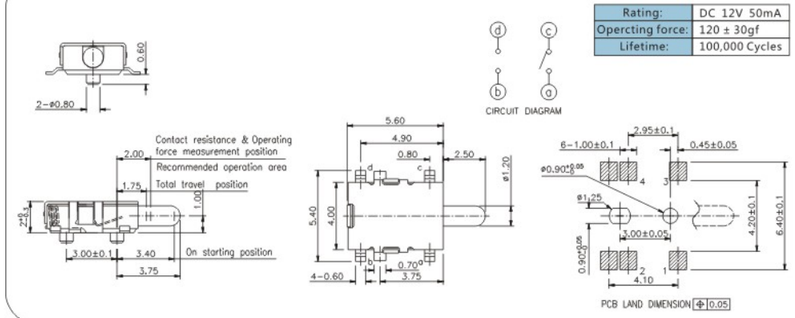

K5-1624SA-02

Rating:	DC 12V 0.1A
Opercting force:	100 ± 30gf
Lifetime:	50,000 Cycles

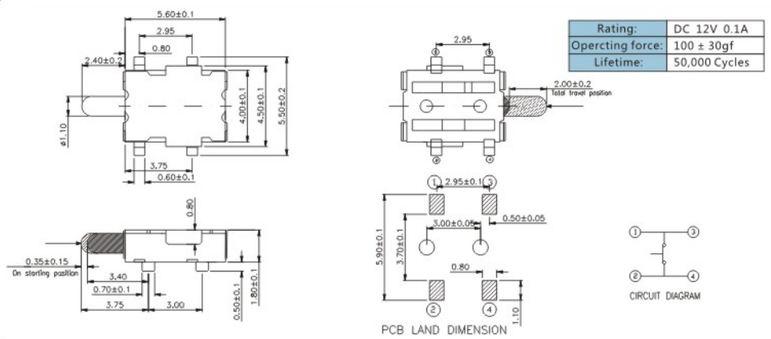

K5-1625UA-01

Rating:	DC 5V 1mA
Opercting force:	20±10gf
Lifetime:	50,000Cycles

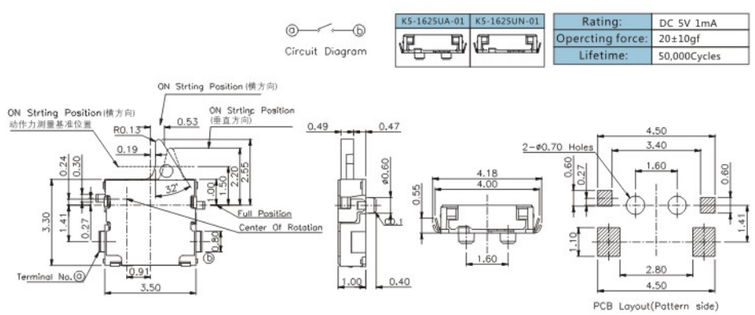

K5-1625UA-02

Rating:	DC 5V 1mA
Opercting force:	20±10gf
Lifetime:	50,000Cycles

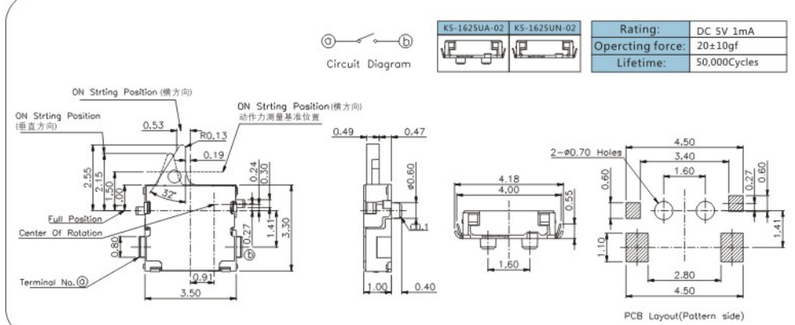

外型图 Dimensions

K5-1626DA-02

Rating:	DC 12V 0.1A
Opercting force:	50±30gf
Lifetime:	50,000Cycles

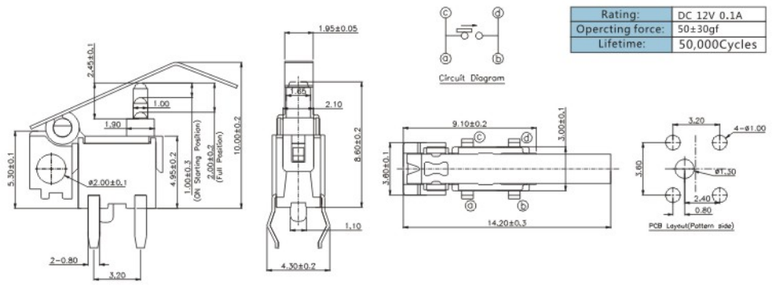

K5-1628DA-01

Rating:	DC 30V 0.1A
Opercting force:	20gf±10gf
Lifetime:	50,000Cycles

PART NO.	H	H1	H2
K5-1628DA-01	8.8	8.2	6.8
K5-1628DA-02	7.9	7.5	6.1
K5-1628DA-03	8.4	7.7	7.1

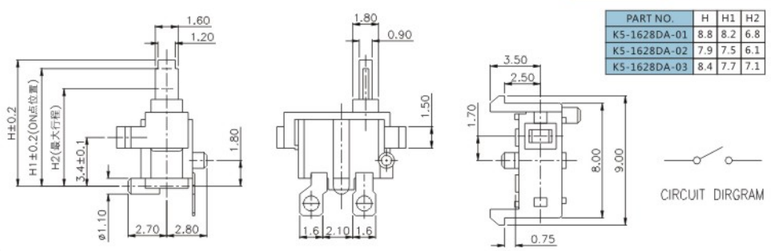

K5-1629DA-01

Rating:	DC 30V 0.1A
Opercting force:	50gf±10gf
Lifetime:	50,000Cycles

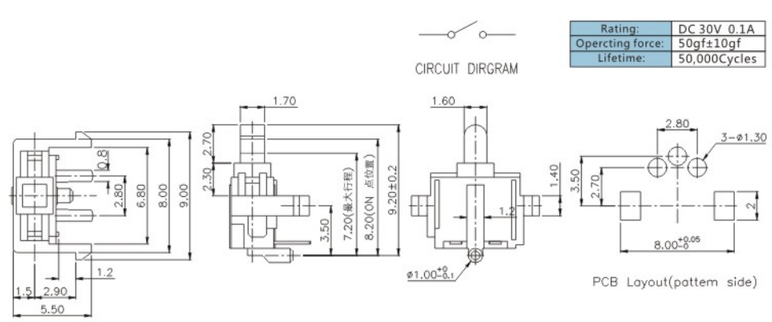

K5-1630DA-01

Rating:	DC 30V 0.1A
Opercting force:	50gf ± 10gf
Lifetime:	50,000 Cycles

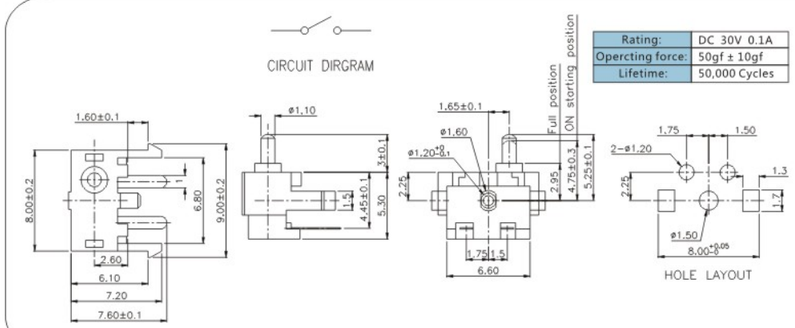

K5-1631DA-01

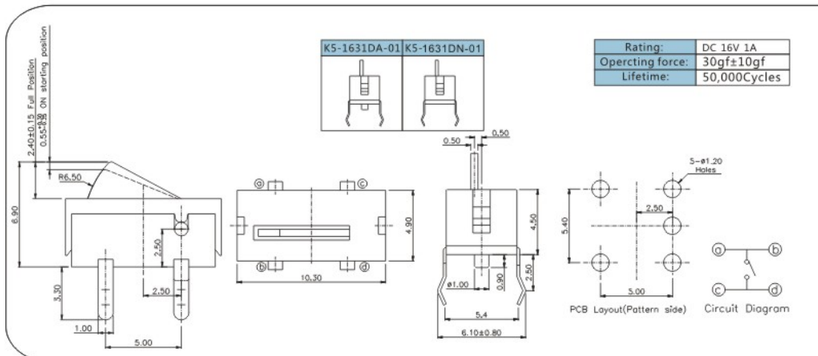

Rating:	DC 16V 1A
Operating force:	30gf±10gf
Lifetime:	50,000Cycles

K5-1631SA-01

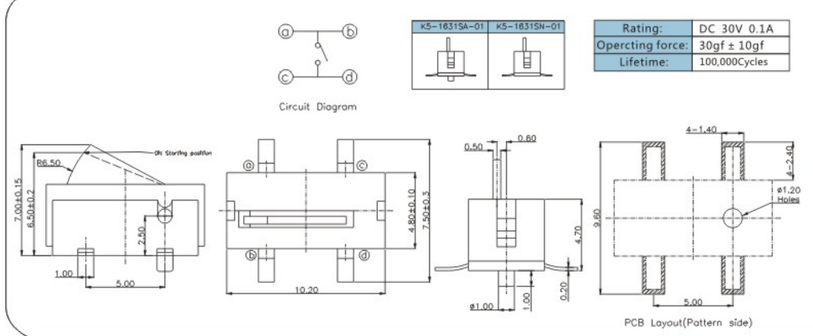

Rating:	DC 30V 0.1A
Operating force:	30gf ± 10gf
Lifetime:	100,000Cycles

K5-1632FN-01

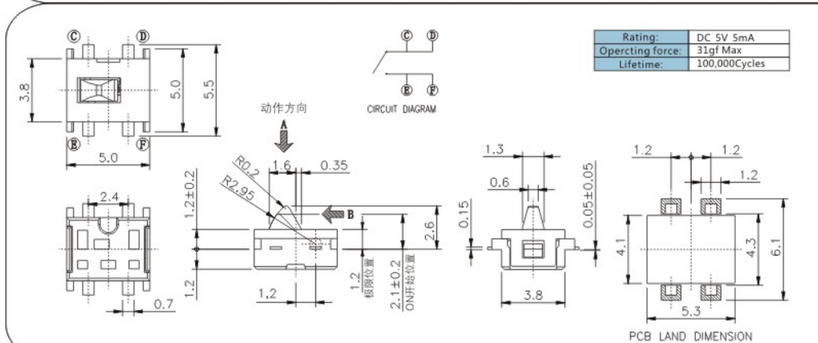

Rating:	DC 5V 5mA
Operating force:	31gf Max
Lifetime:	100,000Cycles

K5-1632SA-01

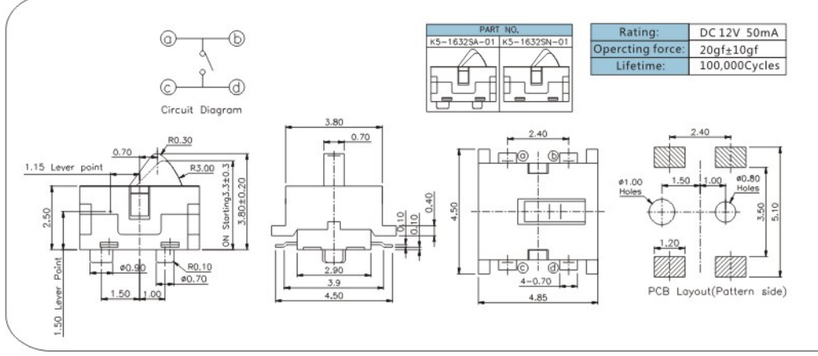

Rating:	DC 12V 50mA
Operating force:	20gf±10gf
Lifetime:	100,000Cycles

外型图 Dimensions

K5-1634SA-01

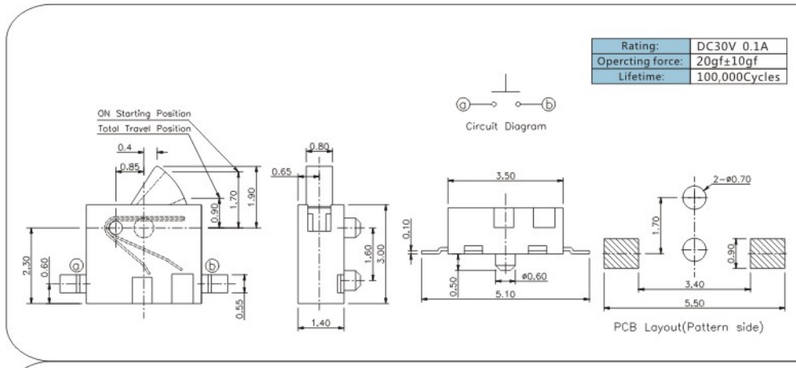

Rating:	DC30V 0.1A
Operating force:	20gf±10gf
Lifetime:	100,000Cycles

K5-1634SA-02

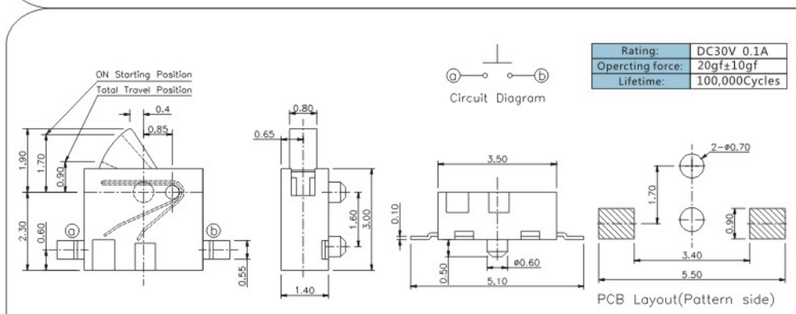

Rating:	DC30V 0.1A
Operating force:	20gf±10gf
Lifetime:	100,000Cycles

K5-1635BN-01

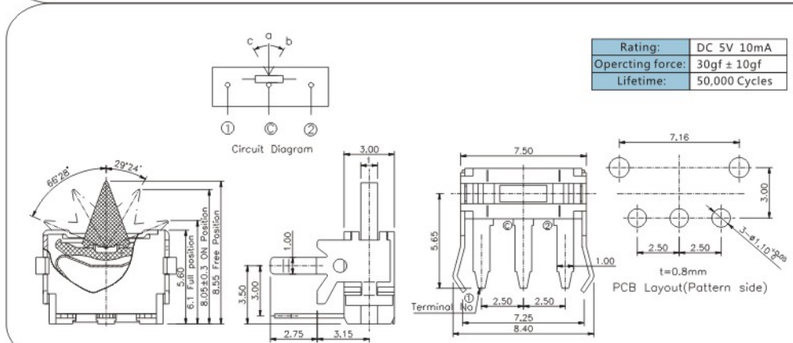

Rating:	DC 5V 10mA
Operating force:	30gf ± 10gf
Lifetime:	50,000 Cycles

K5-1636DA-01

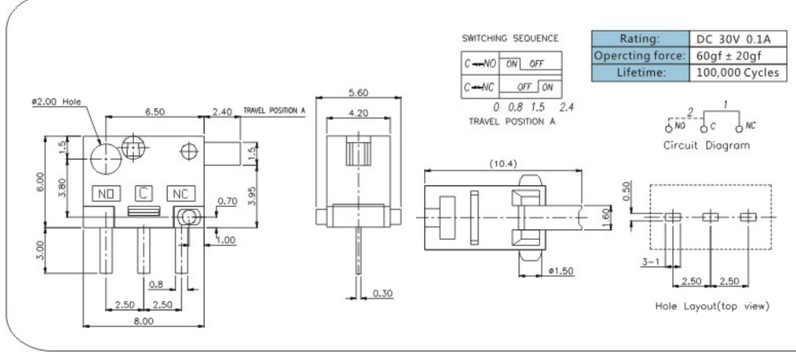

Rating:	DC 30V 0.1A
Operating force:	60gf ± 20gf
Lifetime:	100,000 Cycles

K5-1639SN-01

Rating:	DC 30V 0.1A
Operating force:	40gf ± 10gf
Lifetime:	100,000 Cycles

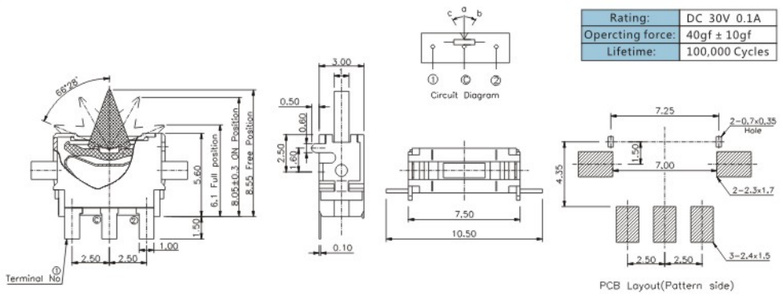

K5-1640SN-01

Rating:	DC 5V 10mA
Operating force:	35gf±10gf
Lifetime:	100,000Cycles

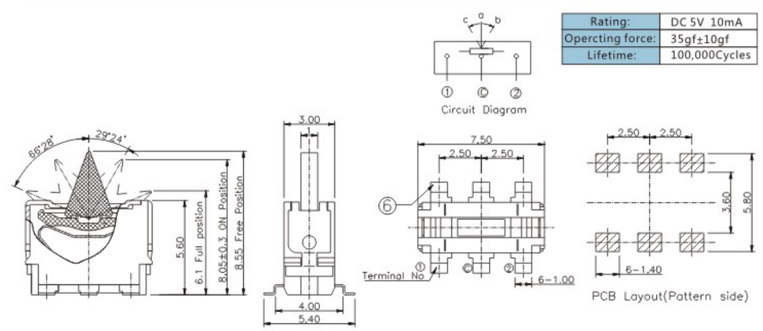

K5-1640DN-01

Rating:	DC 5V 10mA
Operating force:	25gf±10gf
Lifetime:	100,000Cycles

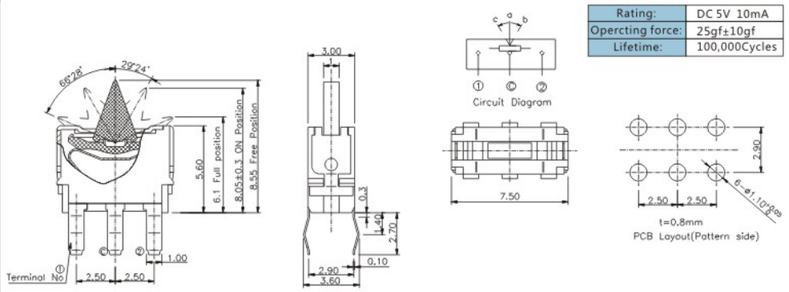

K5-1652UA-01

Rating:	DC 12V 0.1A
Operating force:	20gf±10gf
Lifetime:	100,000Cycles

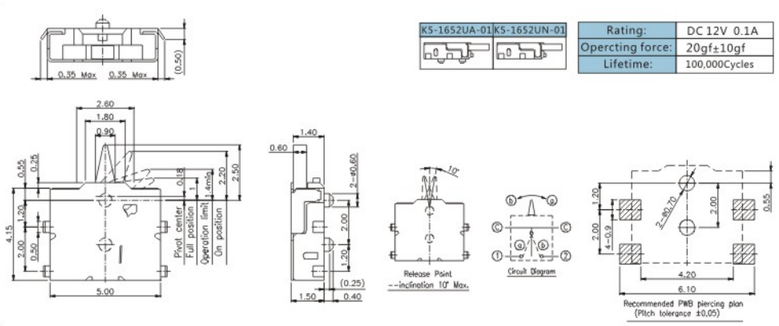

外型图 Dimensions

K5-1653SA-01

Rating:	DC 12V 0.1A
Operating force:	20gf±10gf
Lifetime:	50,000Cycles

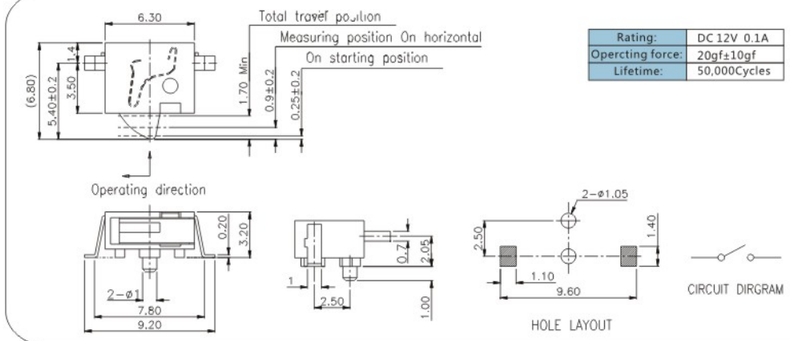

K5-1653DA-01

Rating:	DC 12V 0.1A
Operating force:	30gf±10gf
Lifetime:	50,000Cycles

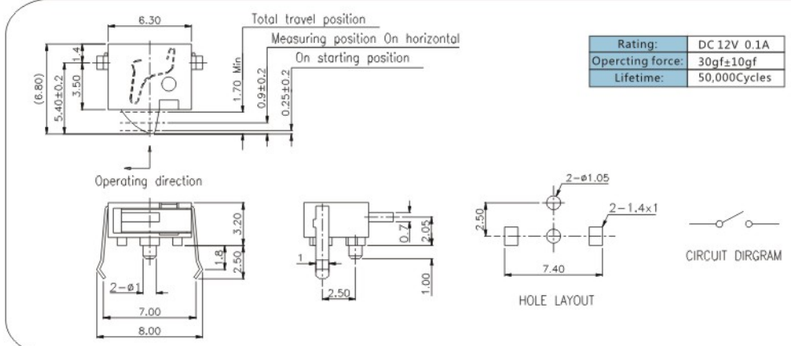

K5-1656SN-01

Rating:	DC 5V 5mA
Operating force:	30gf±10gf
Lifetime:	100,000Cycles

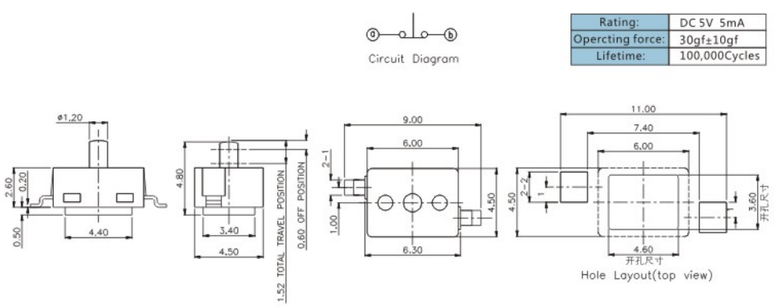

K5-1658UN-01

Rating:	DC 5V 10mA
Operating force:	20gf±10gf
Lifetime:	50,000Cycles

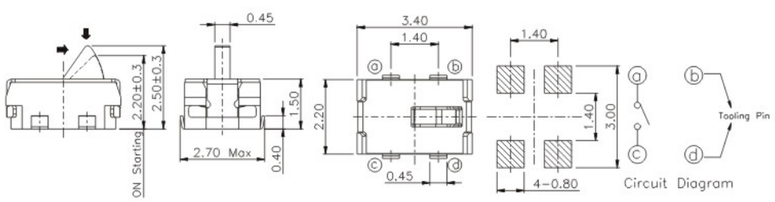

K5-1659SA-01

Rating:	DC 30V 0.1A
Operating force:	30gf±10gf
Lifetime:	50,000Cycles

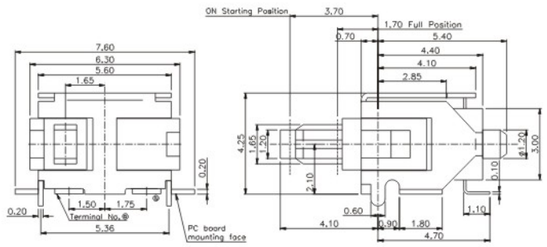

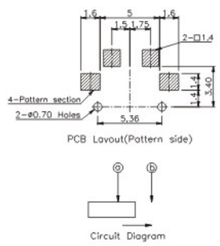

K5-1659SA-02

Rating:	DC 30V 0.1A
Operating force:	30gf±10gf
Lifetime:	50,000Cycles

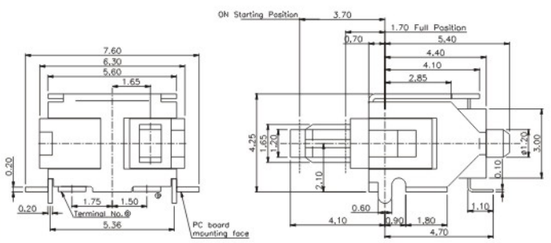

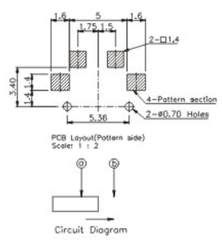

K5-1663DA-01

Rating:	DC 5V 0.1mA~100mA
Operating force:	30gf ± 10gf
Lifetime:	100,000 Cycles

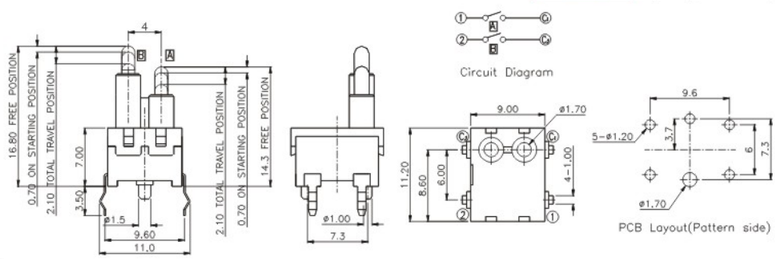

K5-1664DA-01

Rating:	DC 5V 1mA
Operating force:	30gf ±10gf
Lifetime:	100,000Cycles

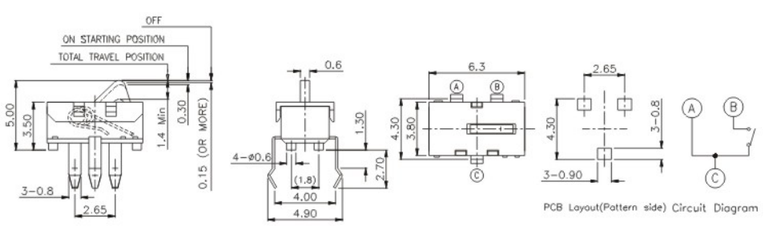

外型图 Dimensions

K5-1664SA-01

Rating:	DC 5V 1mA
Operating force:	50±15gf
Lifetime:	100,000Cycles

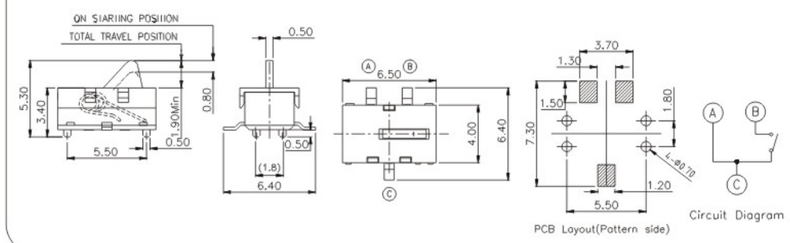

K5-1665SA-01

Rating:	DC 5V 1mA
Operating force:	25gf ±10gf
Lifetime:	100,000Cycles

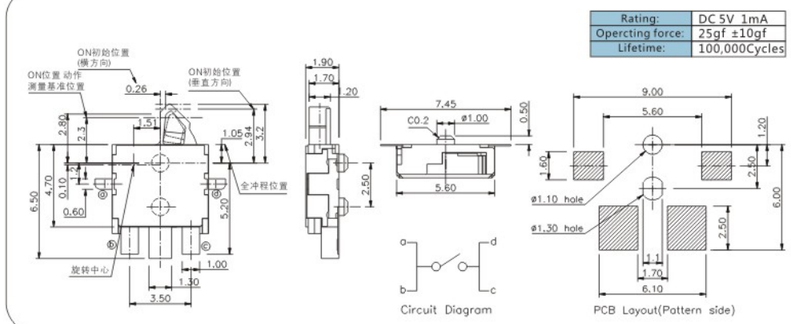

K5-1665SA-02

Rating:	DC 5V 1mA
Operating force:	25gf ±10gf
Lifetime:	100,000Cycles

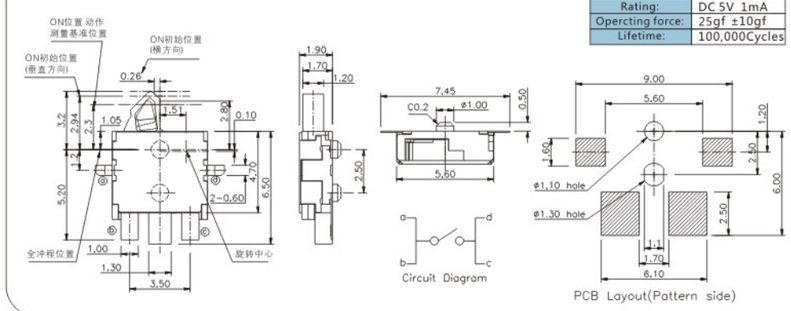

K5-1667SN-02

Rating:	DC 12V 50mA
Operating force:	30 ± 10gf
Lifetime:	100,000 Cycles

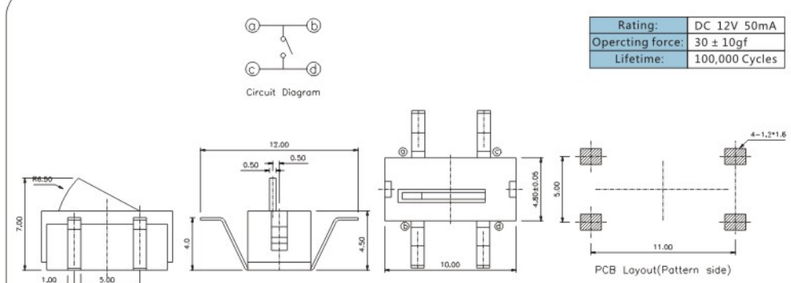

K5-1668SN-01

Rating:	DC 30V 0.1A
Opercting force:	20gf ± 10gf
Lifetime:	50,000Cycles

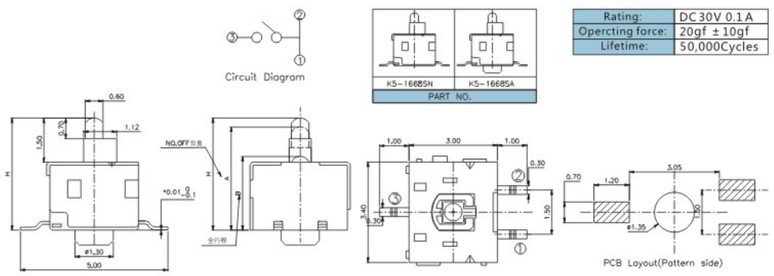

K5-1669DA-01

Rating:	DC 12V 0.1A
Opercting force:	40 ± 15gf
Lifetime:	50,000 Cycles

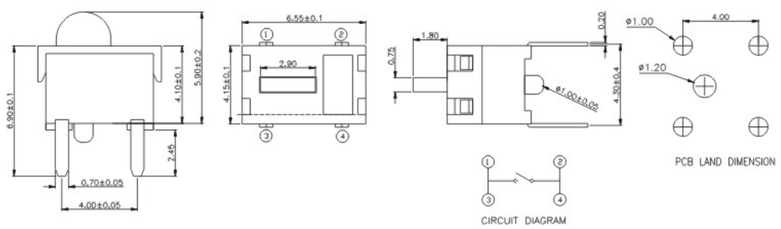

K5-1670DA-02

Rating:	DC 16V 0.1A
Opercting force:	45 ± 15gf
Lifetime:	50,000 Cycles

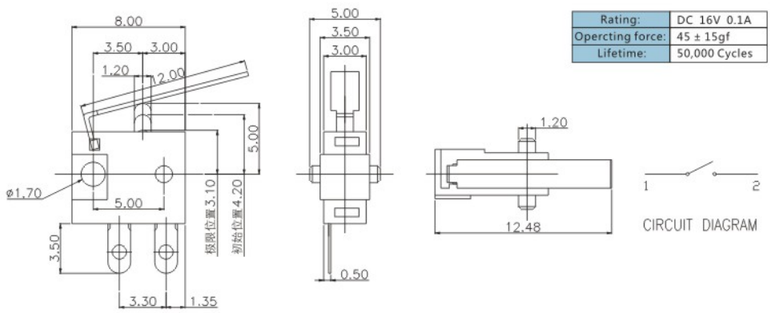

K5-1671SN-01

Rating:	DC 12V 50mA
Opercting force:	40 ± 15gf
Lifetime:	100,000 Cycles

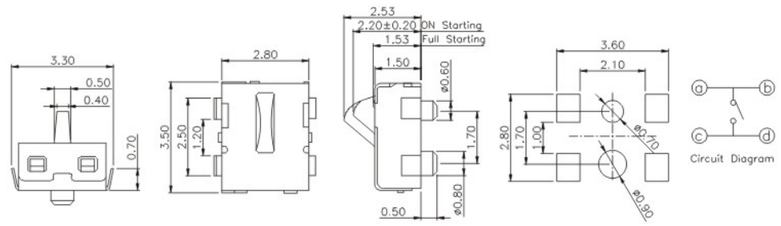

外型图 Dimensions

K5-1672SN-01

Rating:	DC 12V 50mA
Opercting force:	40 ± 15gf
Lifetime:	100,000 Cycles

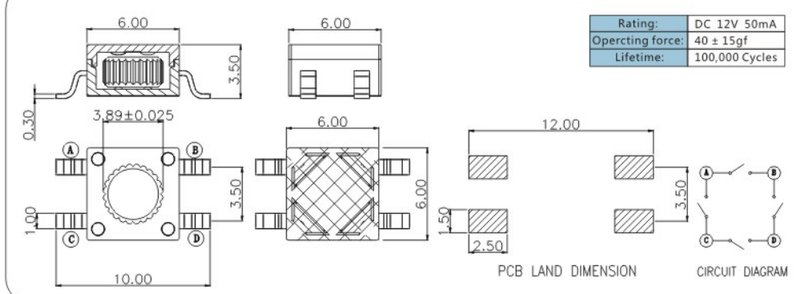

K5-1673SA-01

Rating:	DC 5V 10mA
Opercting force:	26gf Max
Lifetime:	50,000Cycles

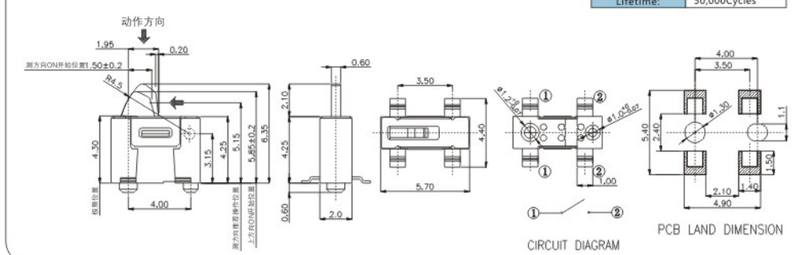

K5-1673SA-03

Rating:	DC 12V 50mA
Opercting force:	30±15gf
Lifetime:	50,000 Cycles

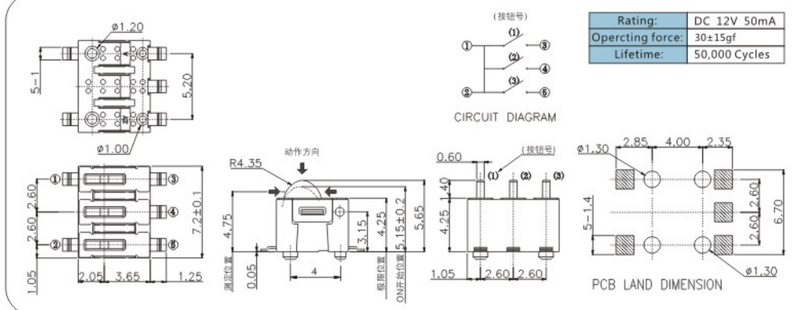

K5-1674DA-01

Rating:	DC 12V 50mA
Opercting force:	30 ± 10gf
Lifetime:	50,000 Cycles

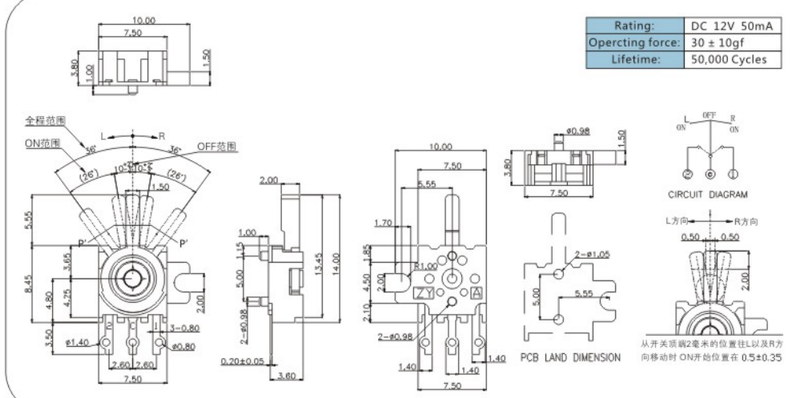

Detector Switch 检测开关

K5-1675DA-01

Rating:	DC 12V 50mA
Opercting force:	30 ± 10gf
Lifetime:	50,000 Cycles

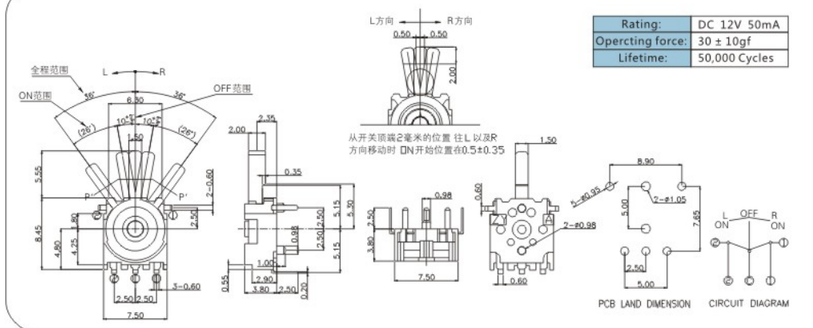

K5-1676DA-01

Rating:	DC 30V 100mA
Opercting force:	100±30gf
Lifetime:	50,000Cycles

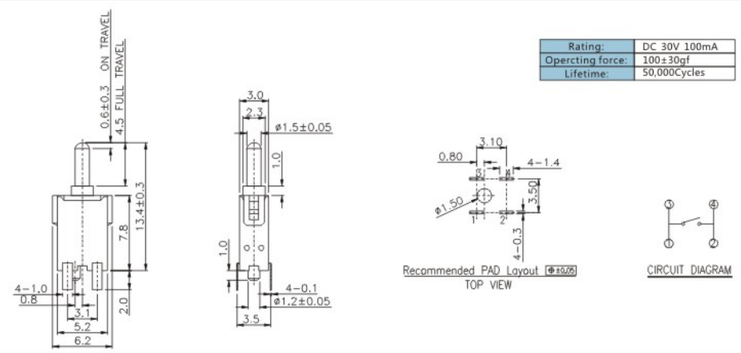

K5-1678DA-01

Rating:	DC 16V 1A
Opercting force:	30±10gf
Lifetime:	50,000Cycles

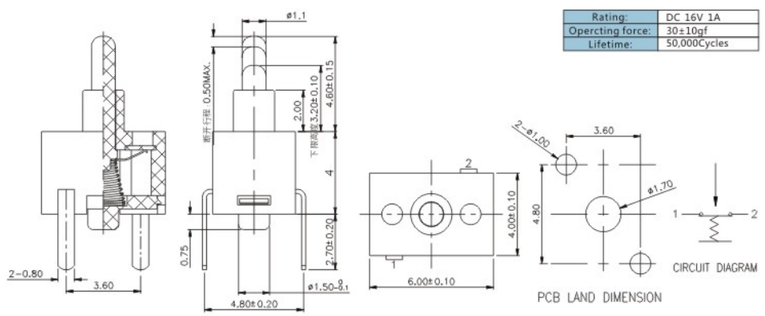

K5-2010DA-01

Rating:	DC 16V 1A
Opercting force:	25±10gf Max
Lifetime:	30,000Cycles

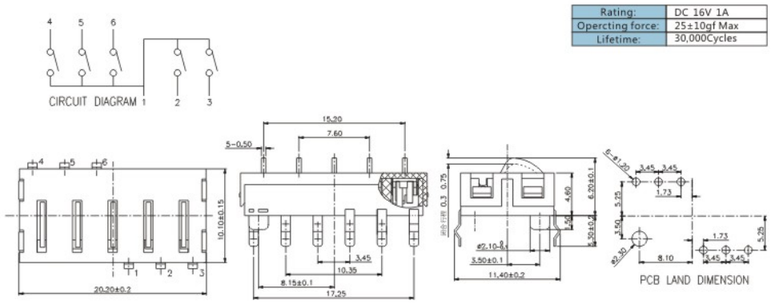

拨动开关 >>
Toggle Switch

Toggle Switch 拨动开关

特征 Features

- 具备各种档位结构设计。
  All kinds of variable levels design
- 安装方式有DIP和SMT供选择。
  Assembling ways:DIP and SMT
- 开关滑动力均匀，段落感佳。
  The switch operating force equality, good feeling
- 可依据客户要求提供所需端子脚位产品。
  The terminals state can be design according to requirements

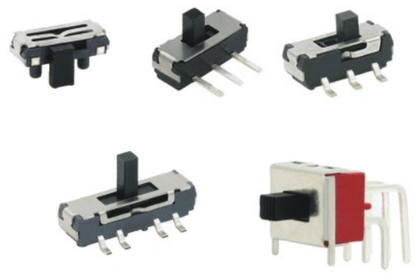

规格参数 Basic specfication parameter

电气特性 Electrical Characteristics	额定负荷 Rating	见具体产品规格 See detail spec
	接触阻抗 Contact Resistance	≤50mΩ
	绝缘阻抗 Insulation Resistance	≥100mΩ
	绝缘耐电压 Withstand voltage	AC500V 1Minute
	电气寿命 Electrical Life	10,000Cycles above(Load)
机械/可靠性特性 Mechanical/reliability Characteristics	操作力 Operating force range	见具体产品规格 See detail spec
	机械寿命 Mechanical Life	10,000Cycles(NO Load)
	使用温度 Operating temperature range	−25°C+80°C
	使用湿度 Ambient humidity used	≤85%RH
	可焊性 Solder ability	245°C ± 5°C 3S
	耐焊接热 Withstand Soldering temperature	260°C ± 5

焊接条件 Welding conditions

- 手工焊 Hand soldering
  使用30瓦烙铁，烙铁尖端温度不超过350℃，焊接时间3S。
  Use a soldering iron of 30 watts, Controlled at 350°C approximately 3 seconds while solder applying
- 波峰焊/回流焊 Wave soldering/Reflow Soldering
  峰值温度不超过260℃，焊接时间不超过5S（焊接温度曲线参考如下）。
  The peak temperature of the wave oven should be set to 260°C max.Condition for soldering Temperature Profile

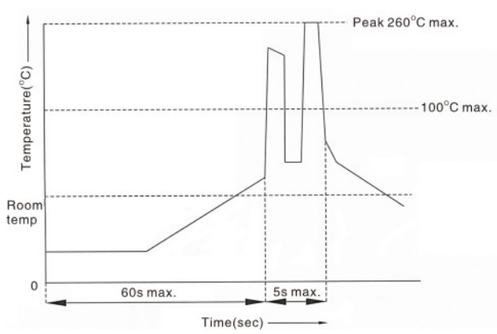

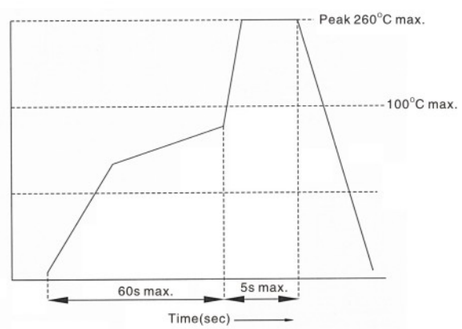

外型图 Dimensions

K3-1005S

Rating:	DC 12V 100mA
Operating force:	200±80gf
Lifetime:	10,000Cycles

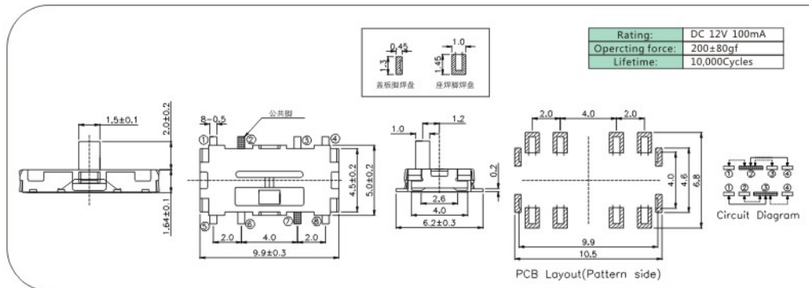

K3-1203S

Rating:	DC 4V 300mA
Operating force:	100gf
Lifetime:	50,000 Cycles

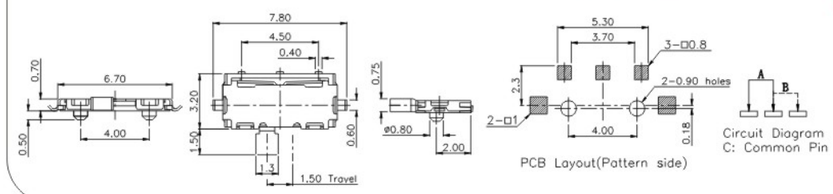

K3-1204D

Rating:	DC 120V 5A
Operating force:	80gf
Lifetime:	50,000 Cycles

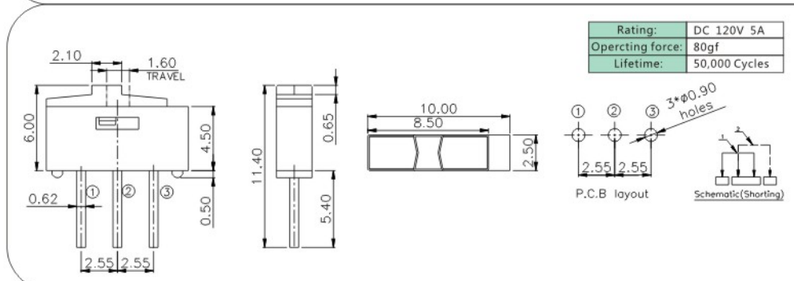

K3-1208S

Rating:	DC 6V 300mA
Operating force:	200 ± 100gf
Lifetime:	10,000 Cycles

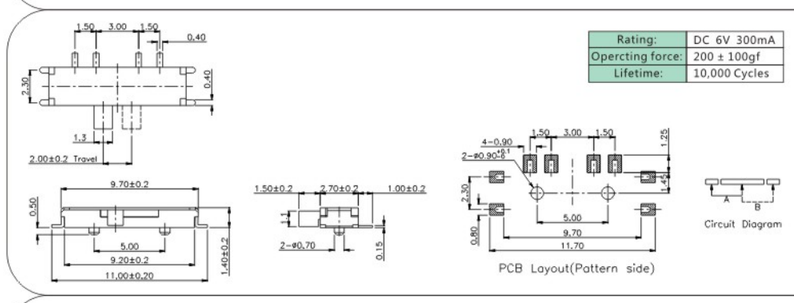

K3-1235D

Rating:	DC 6V 300mA
Operating force:	200 ± 100gf
Lifetime:	10,000 Cycles

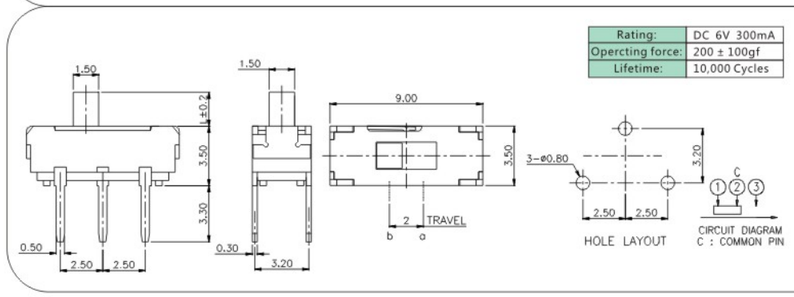

K3-1235S

Rating:	DC 6V 300mA
Opercting force:	200gf
Lifetime:	10,000 Cycles

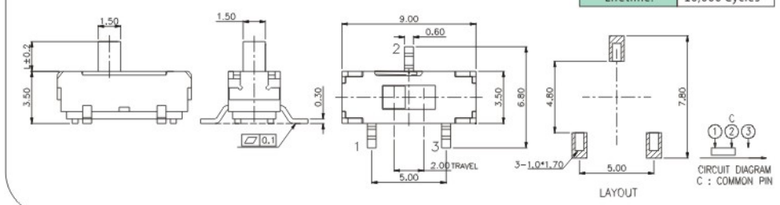

K3-1245D

Rating:	DC 6V 300mA
Opercting force:	200gf
Lifetime:	10,000 Cycles

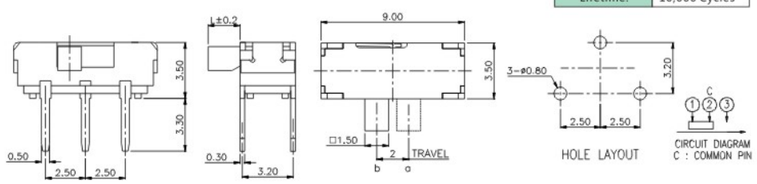

K3-1250S

Rating:	DC 6V 300mA
Circuit:	1P2T
Opercting force:	250±50gf

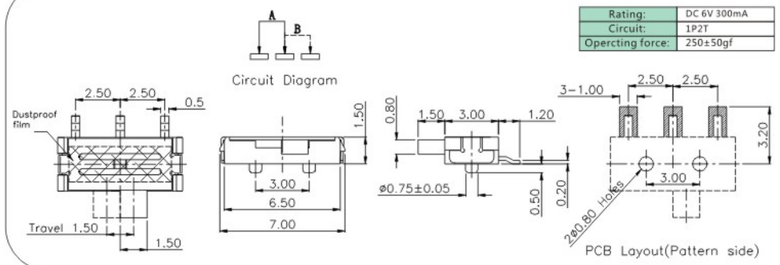

K3-1260D

Rating:	DC 6V 300mA
Opercting force:	190gf ± 50gf
Lifetime:	10,000 Cycles

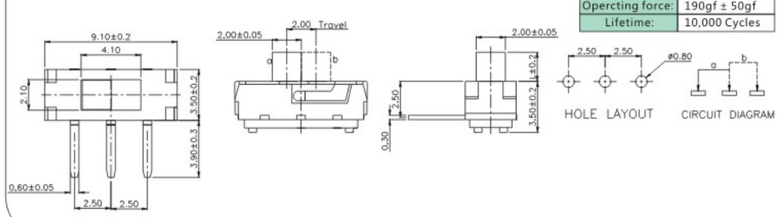

K3-1270L

Rating:	DC 6V 300mA
Circuit:	1P2T
Travel:	2±0.2mm
Opercting force:	150 ± 100gf

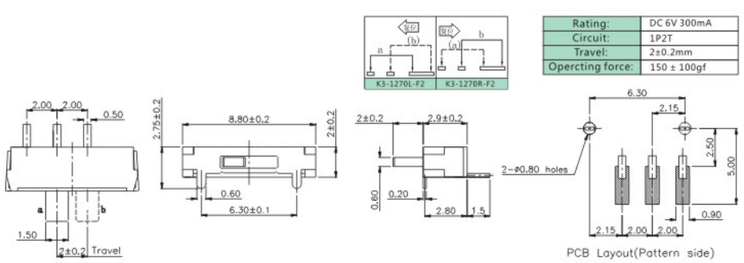

外型图 Dimensions

K3-1270S

Rating:	DC 6V 300mA
Circuit:	1P2T
Travel:	2±0.2mm
Opercting force:	120±50gf

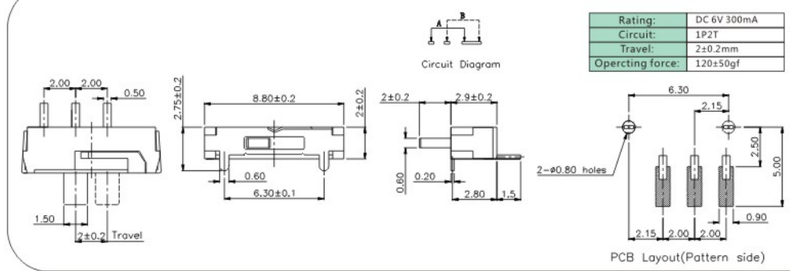

K3-1280S

PAPT NO.	L	Operating force
K3-1280S-F□	2	200±100gf
K3-1280S-K□	3	
K3-1280S-L□	4	

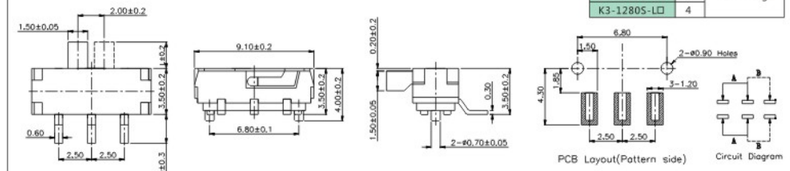

K3-1286D

Rating:	DC 6V 300mA
Circuit:	1P2T
Travel:	2±0.2mm
Opercting force:	120±50gf

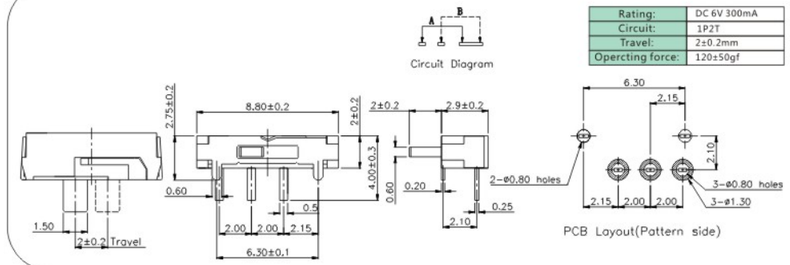

K3-1286L

Rating:	DC 6V 300mA
Circuit:	1P2T
Travel:	2±0.2
Opercting force:	150±100gf

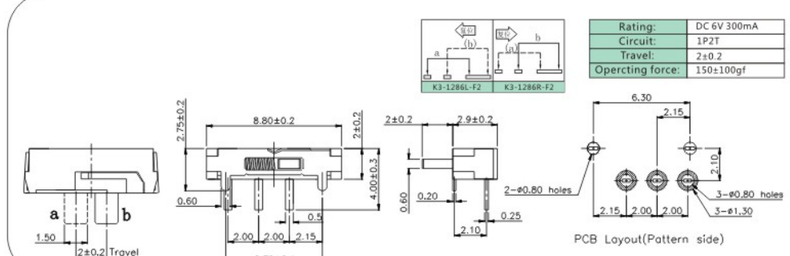

K3-1288S

Rating:	DC 12V 50mA
Circuit:	1P2T
Opercting force:	150± 80gf

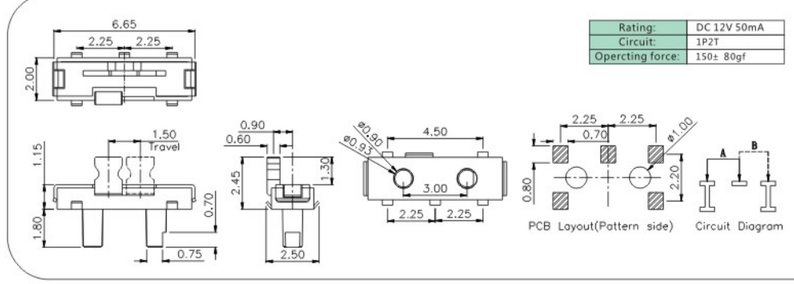

K3-1290S

Rating:	DC 6V 300mA
Circuit:	1P2T
Opercting force:	160±50gf

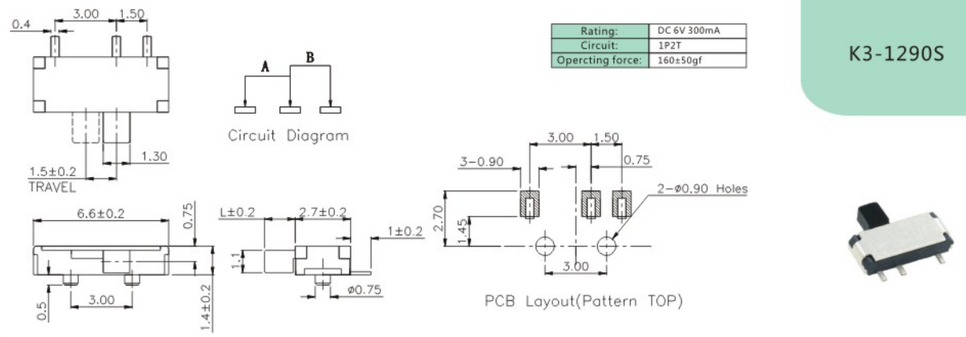

K3-1291S

Rating:	DC 4V 0.3A
Circuit:	1P2T
Opercting force:	160±50gf

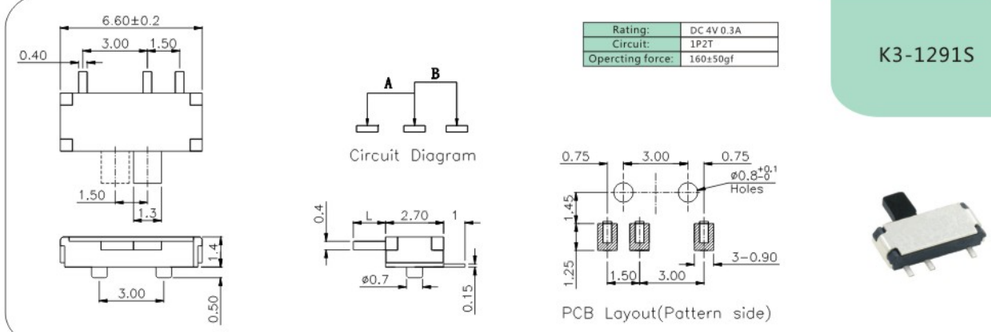

K3-1292S

Rating:	DC 12V 0.1A
Circuit:	1P2T
Opercting force:	140±50gf

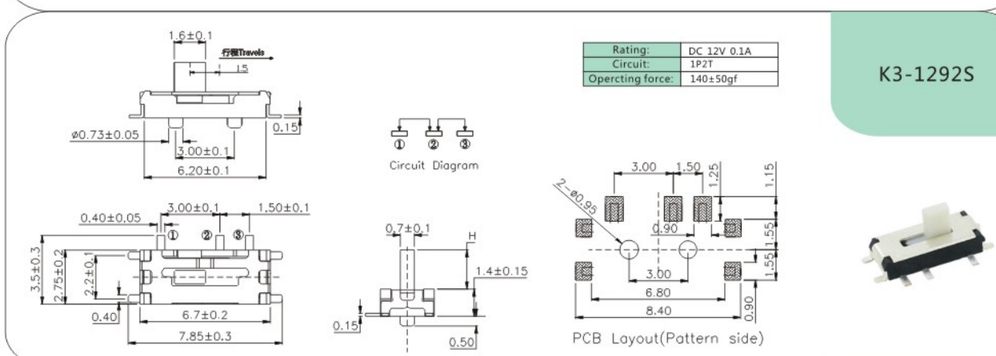

K3-1292M

Rating:	DC 4V 0.3A
Circuit:	1P2T
Opercting force:	160±50gf

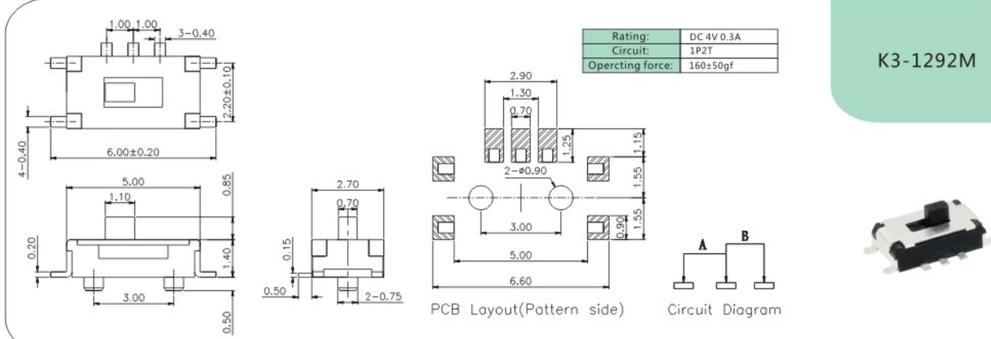

外型图 Dimensions

K3-1293S

Rating:	DC 30V 0.3A
Circuit:	1P2T
Opercting force:	160±50gf

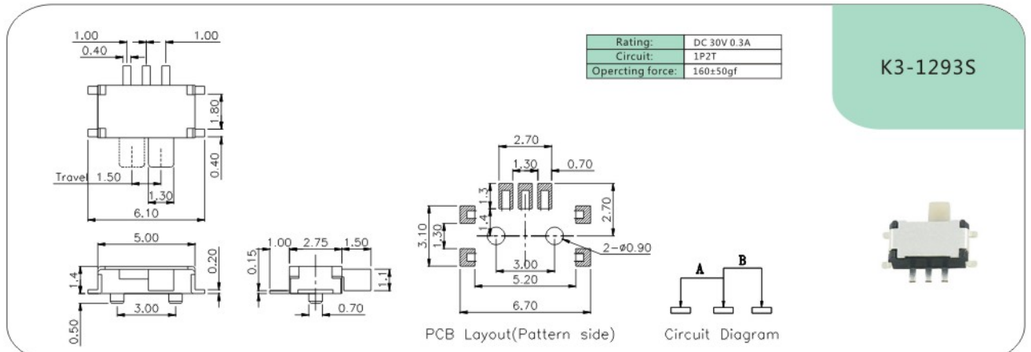

K3-1295S

Rating:	DC 4V 0.3A
Circuit:	1P2T
Opercting force:	100gf

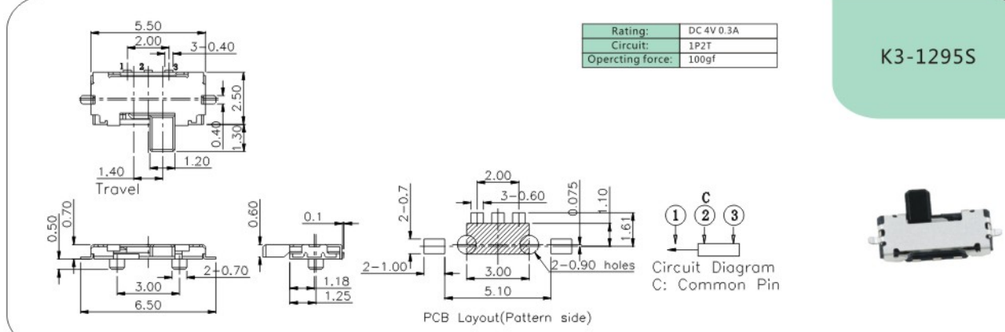

K3-1296S

Rating:	DC 4V 0.3mA
Circuit:	1P2T
Travel:	1.5±0.2mm
Opercting force:	160gf±50gf

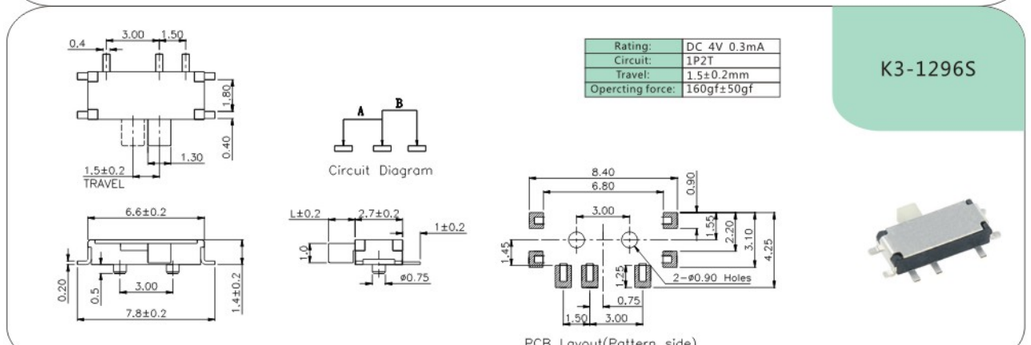

K3-1297S

Rating:	DC 12V 0.1A
Circuit:	1P2T
Travel:	3±0.2mm
Opercting force:	100±30gf

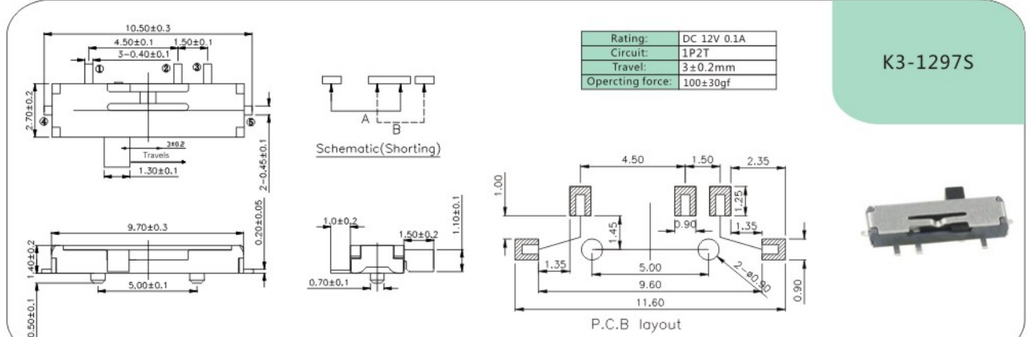

K3-1300S

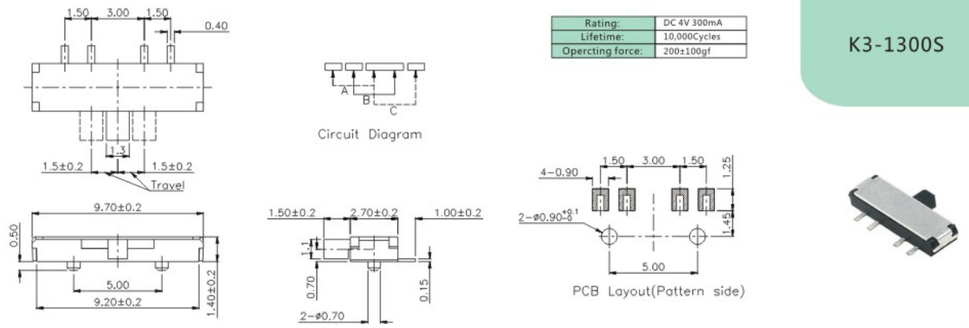

Rating:	DC 4V 300mA
Lifetime:	10,000Cycles
Opercting force:	200±100gf

K3-1310S

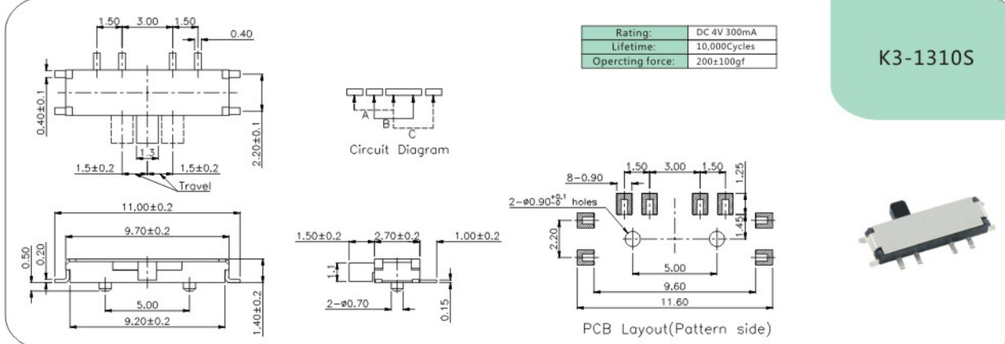

Rating:	DC 4V 300mA
Lifetime:	10,000Cycles
Opercting force:	200±100gf

K3-1311S

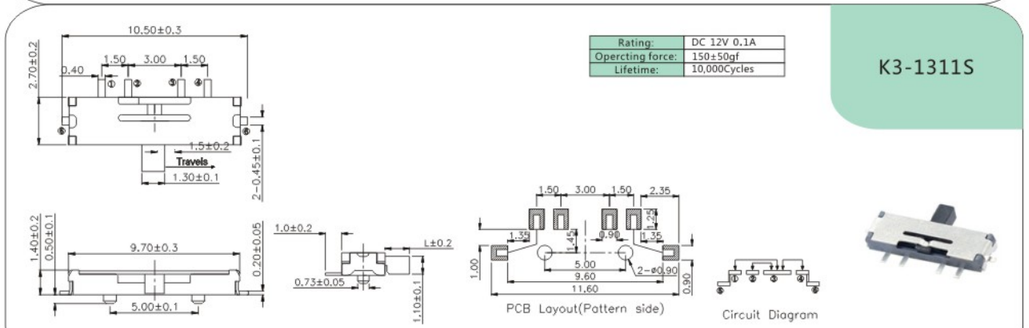

Rating:	DC 12V 0.1A
Opercting force:	150±50gf
Lifetime:	10,000Cycles

K3-1336D

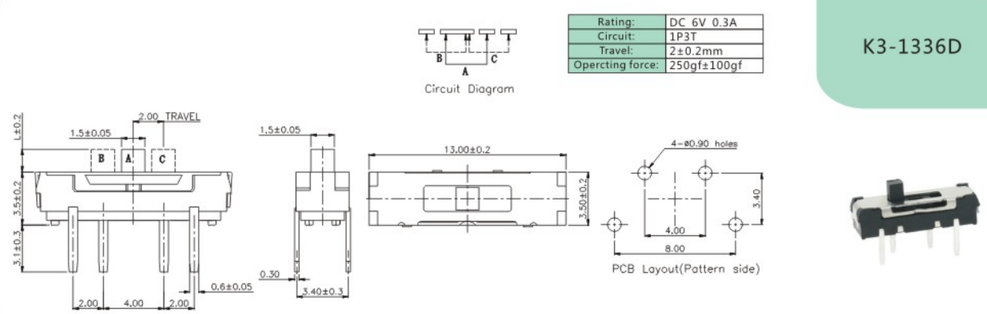

Rating:	DC 6V 0.3A
Circuit:	1P3T
Travel:	2±0.2mm
Opercting force:	250gf±100gf

外型图 Dimensions

K3-1336S

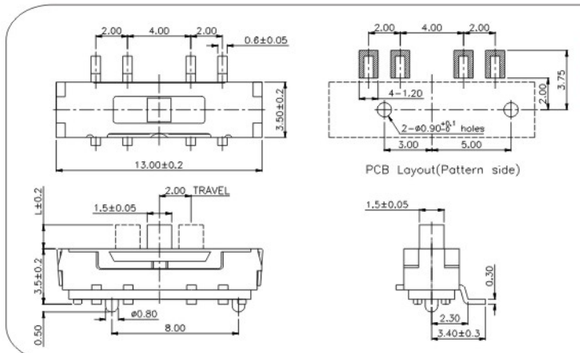

Rating:	DC 6V 0.3A
Circuit:	1P3T
Travel:	2±0.2mm
Opercting force:	250gf±100gf

K3-1346F

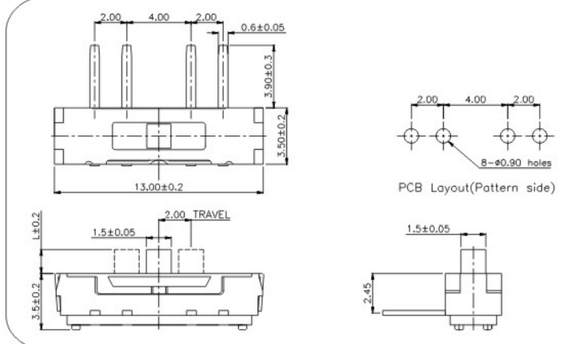

Rating:	DC 12V 0.1A
Opercting force:	200±50gf
Lifetime:	10,000Cycles

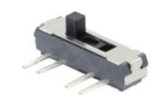

K3-1346E

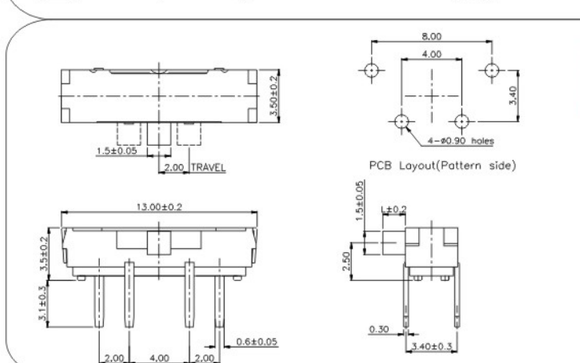

PAPT NO.	L	Operating force
K3-1346E-F□	2	250±100gf
K3-1346E-K□	3	
K3-1346E-L□	4	

K3-1346S

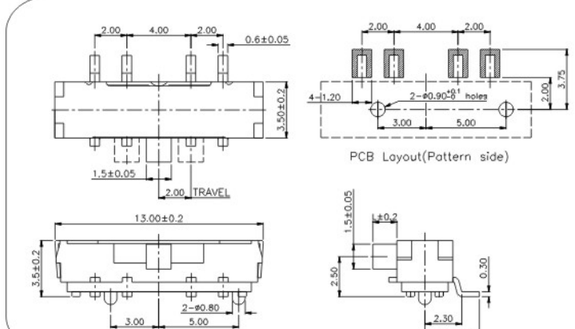

PAPT NO.	L	Operating force
K3-1346S-F□	2	250±100gf
K3-1346S-K□	3	
K3-1346S-L□	4	

K3-1360S

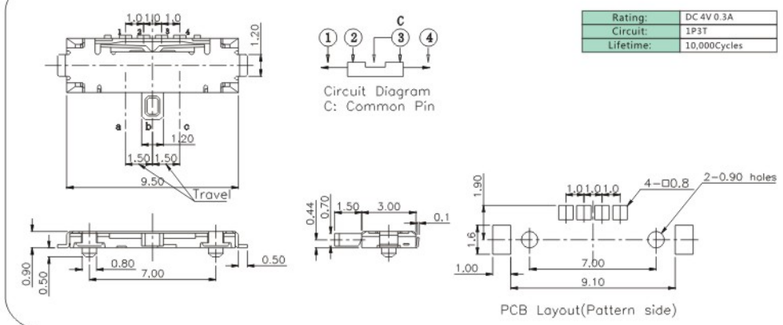

Rating:	DC 4V 0.3A
Circuit:	1P3T
Lifetime:	10,000Cycles

K3-1370D

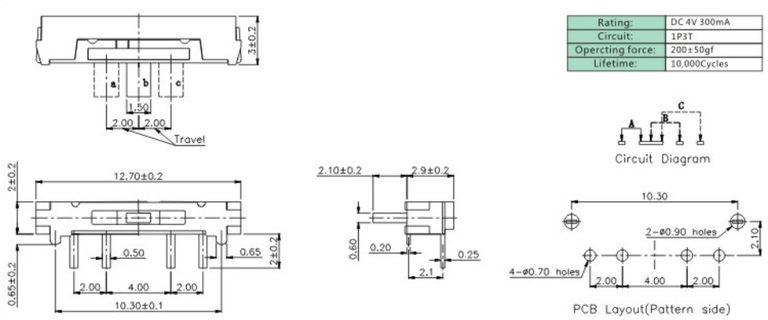

Rating:	DC 4V 300mA
Circuit:	1P3T
Opercting force:	200±50gf
Lifetime:	10,000Cycles

K3-1386E

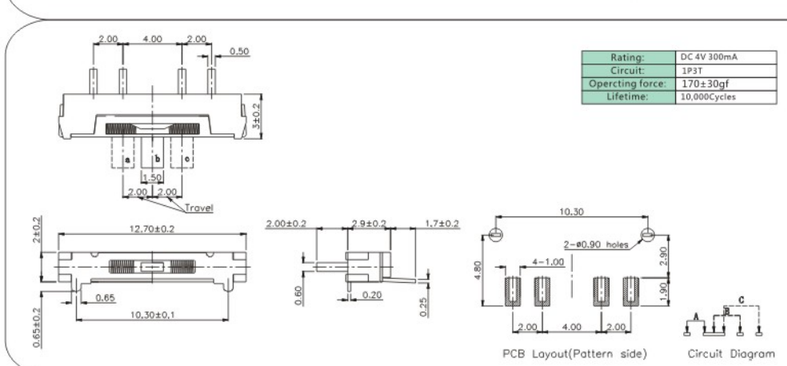

Rating:	DC 4V 300mA
Circuit:	1P3T
Opercting force:	170±30gf
Lifetime:	10,000Cycles

K3-1386L

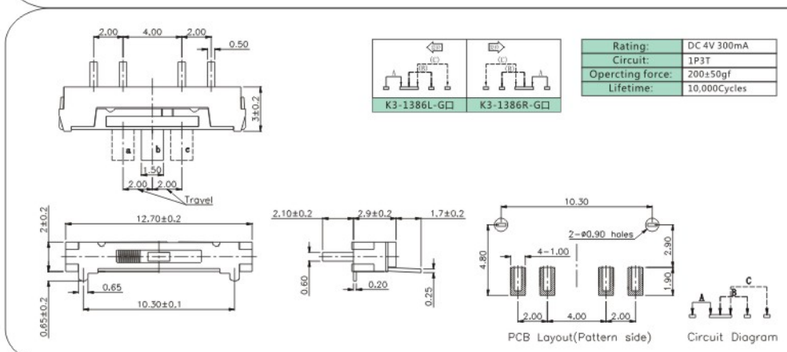

Rating:	DC 4V 300mA
Circuit:	1P3T
Opercting force:	200±50gf
Lifetime:	10,000Cycles

外型图 Dimensions

K3-1386R

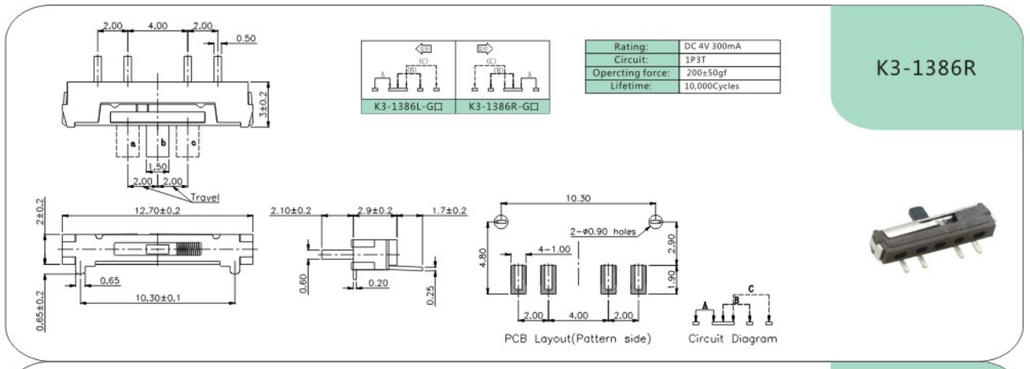

Rating:	DC 4V 300mA
Circuit:	1P3T
Opercting force:	200±50gf
Lifetime:	10,000Cycles

K3-1386S

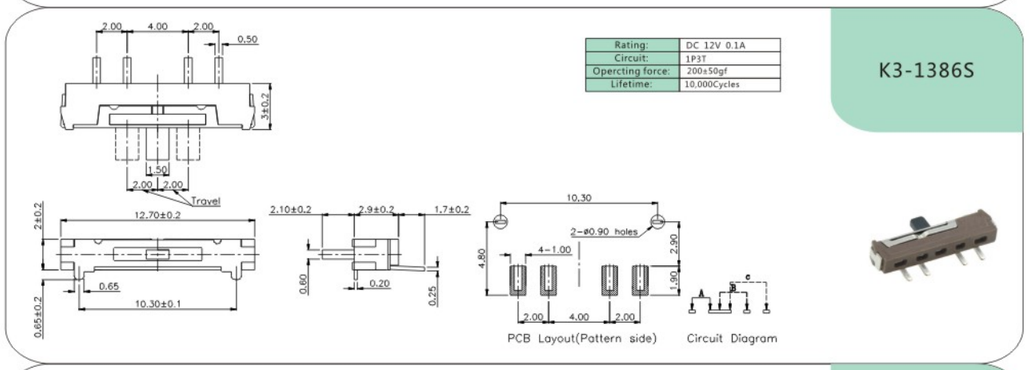

Rating:	DC 12V 0.1A
Circuit:	1P3T
Opercting force:	200±50gf
Lifetime:	10,000Cycles

K3-1390S

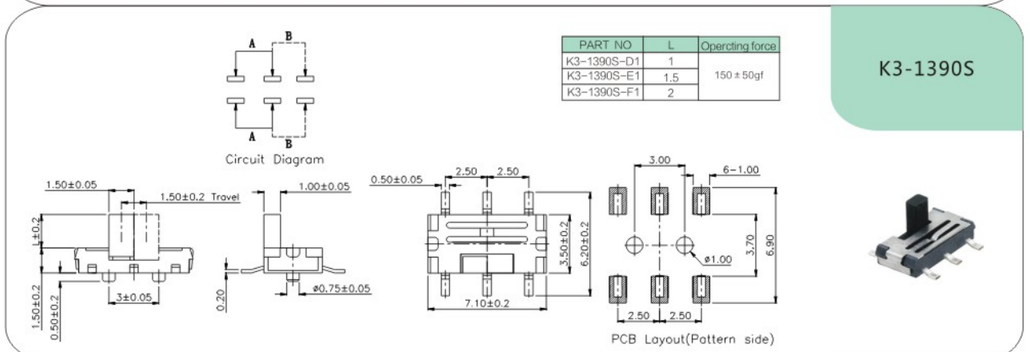

PART NO	L	Opercting force
K3-1390S-D1	1	150±50gf
K3-1390S-E1	1.5	
K3-1390S-F1	2	

K3-1391A

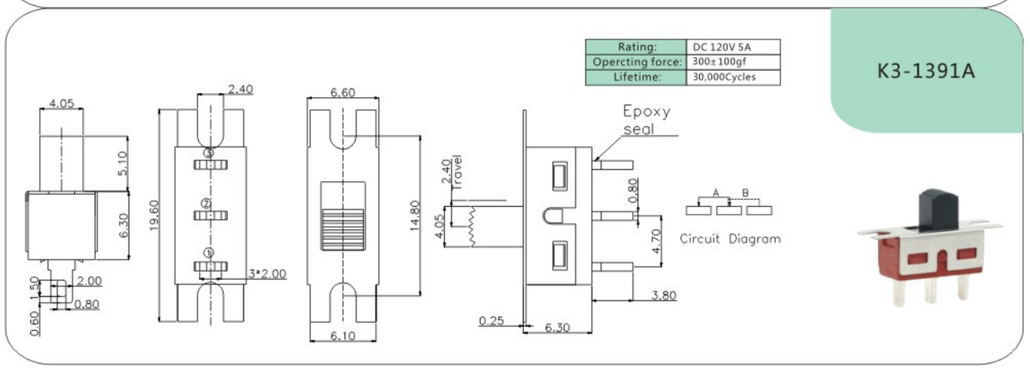

Rating:	DC 120V 5A
Opercting force:	300±100gf
Lifetime:	30,000Cycles

K3-1391B

Rating:	DC 125V 3A
Opercting force:	300±150gf
Lifetime:	30,000Cycles

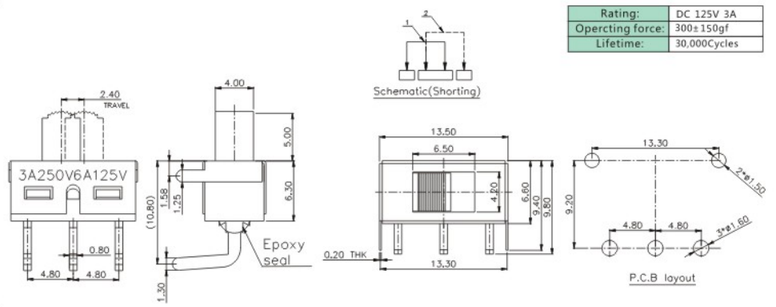

K3-1391C

Rating:	DC 120V 5A
Opercting force:	300±100gf
Lifetime:	30,000Cycles

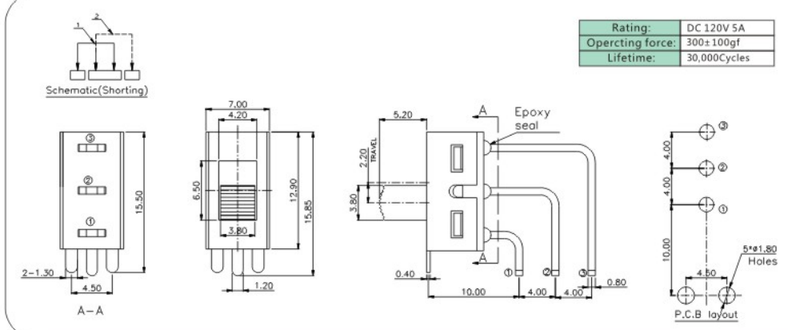

K3-1391L

Rating:	DC 6V 300mA
Opercting force:	250±100gf
Lifetime:	10,000Cycles

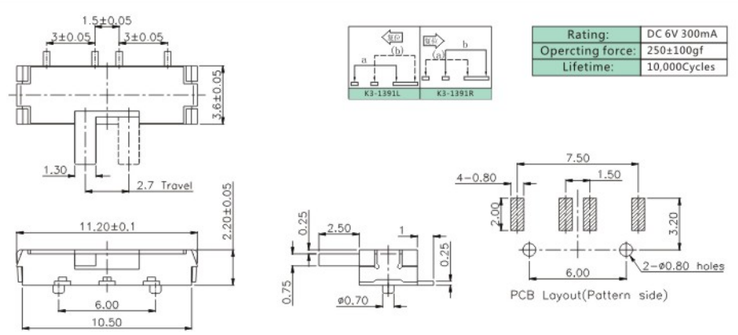

K3-1392S

Rating:	DC 12V 0.1A
Opercting force:	130±50gf
Lifetime:	10,000Cycles

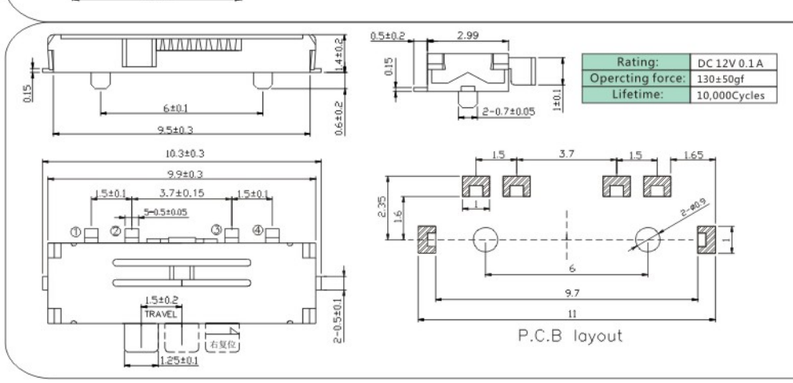

外型图 Dimensions

K3-1392M

Rating:	DC 12V 0.1A
Opercting force:	130±50gf
Lifetime:	10,000Cycles

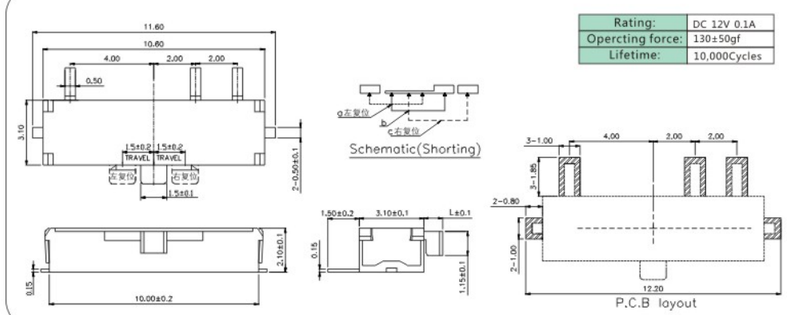

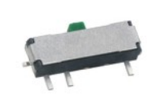

K3-1400S

Rating:	4V 300mA
Opercting force:	200±50gf
Lifetime:	10,000Cycles

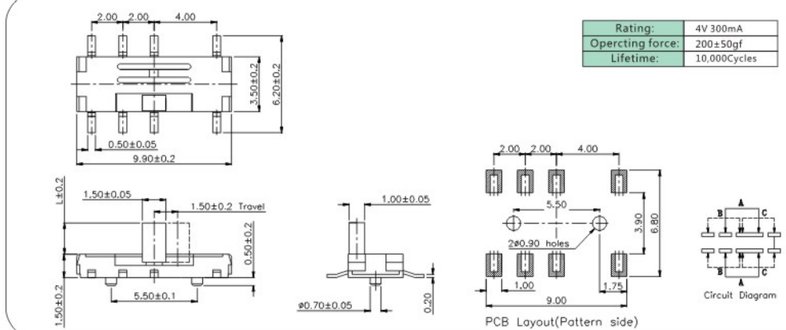

K3-1410S

Rating:	DC 6V 300mA
Opercting force:	200±100gf
Lifetime:	10,000Cycles

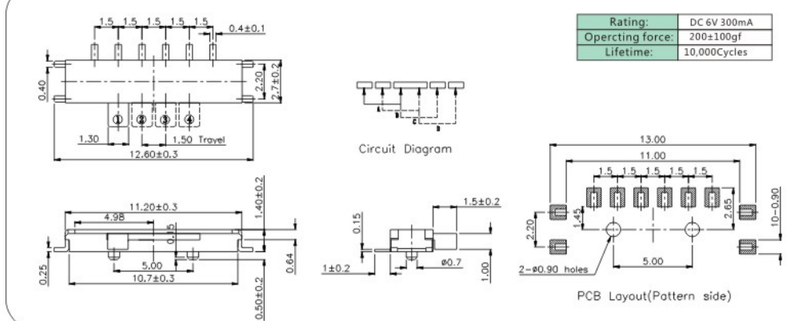

K3-1500S

Rating:	DC 6V 300mA
Opercting force:	130±50gf
Lifetime:	10,000Cycles

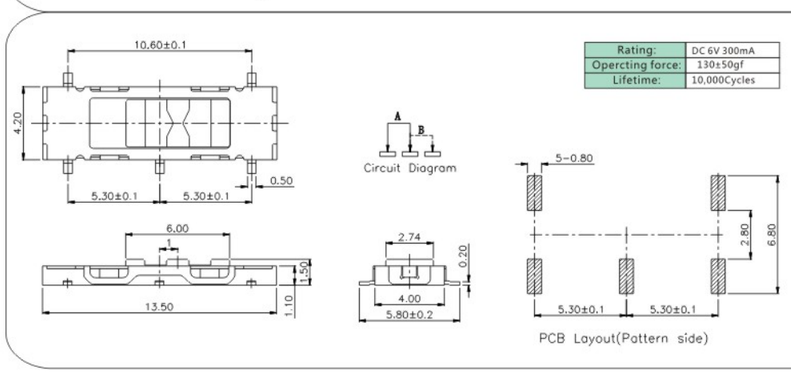

K3-1511S

Rating:	DC 6V 300mA
Opercting force:	100±50gf
Lifetime:	10,000Cycles

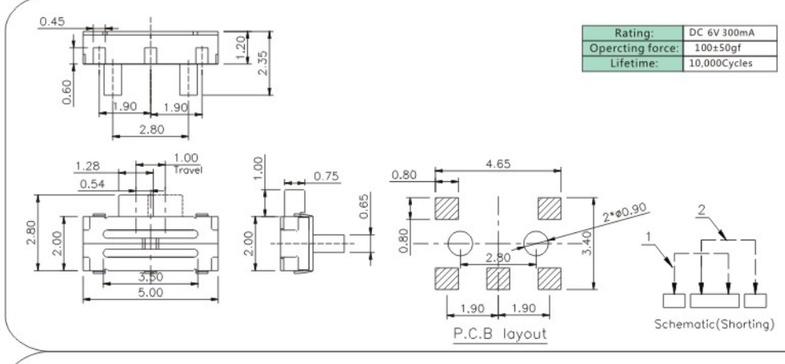

K3-2235D

Rating:	DC 6V 300mA
Opercting force:	200±100gf
Lifetime:	10,000Cycles

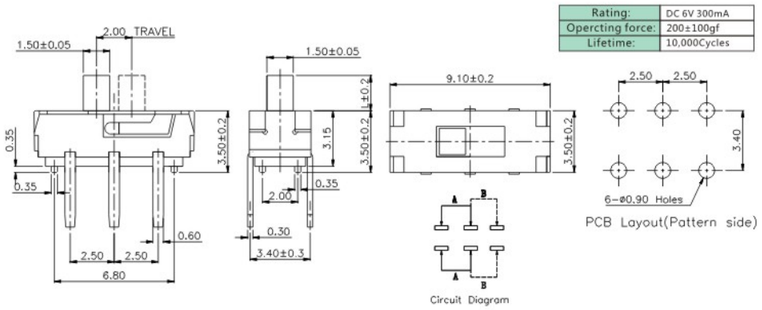

K3-2235S

Rating:	DC 6V 300mA
Opercting force:	200±100gf
Lifetime:	10,000Cycles

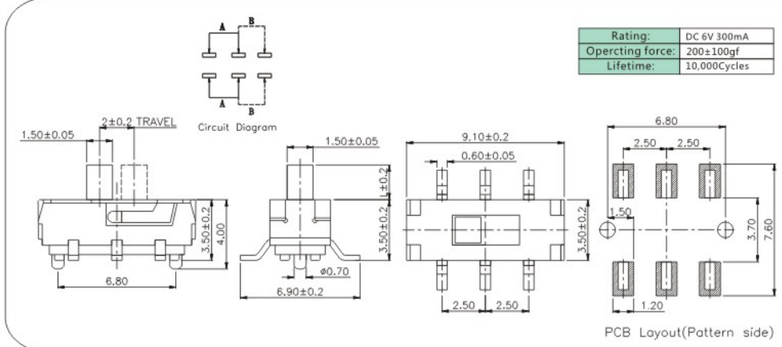

K3-2245D

Rating:	DC 6V 300mA
Opercting force:	200±100gf
Lifetime:	10,000 Cycles

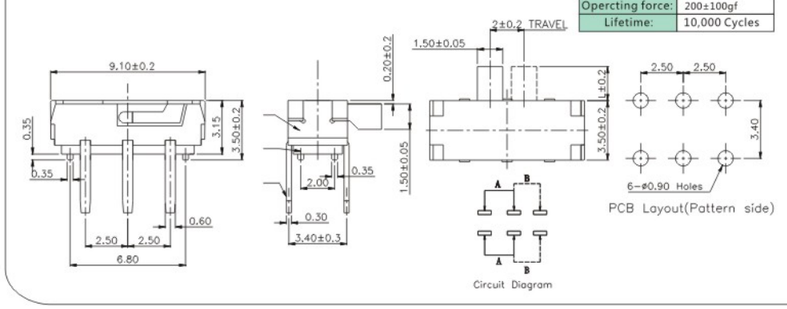

外型图 Dimensions

K3-2245S

Rating:	DC 6V 300mA
Opercting force:	200±100gf
Lifetime:	10,000 Cycles

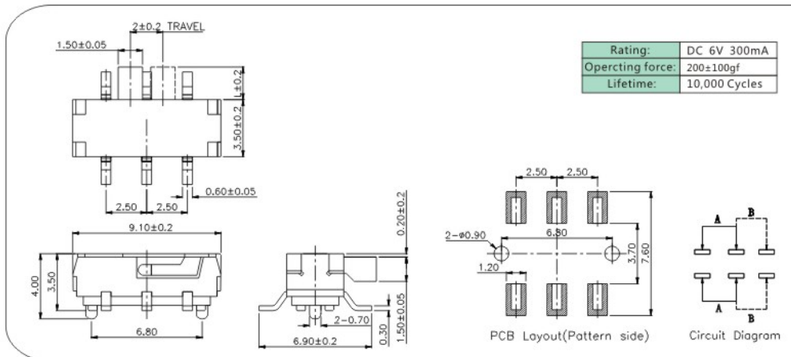

K3-2248S

Rating:	DC 4V 300mA
Opercting force:	300±150gf
Lifetime:	10,000 Cycles

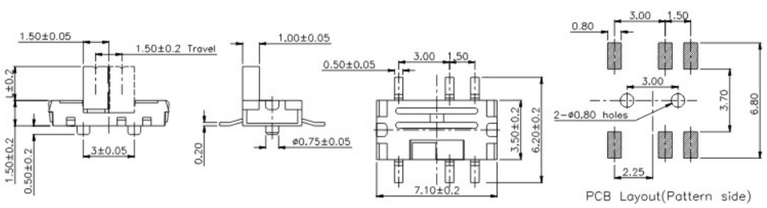

K3-2258S

Rating:	DC 4V 300mA
Opercting force:	300±150gf
Lifetime:	10,000 Cycles

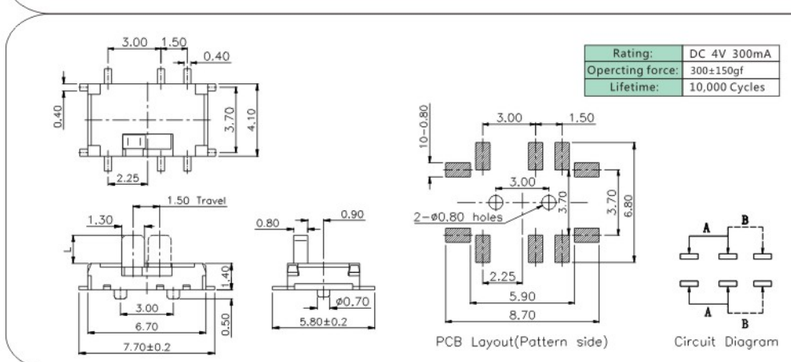

K3-2268D

Rating:	DC 6V 0.3A
Circuit:	4P2T
Opercting force:	200±50gf
Lifetime:	10,000Cycles

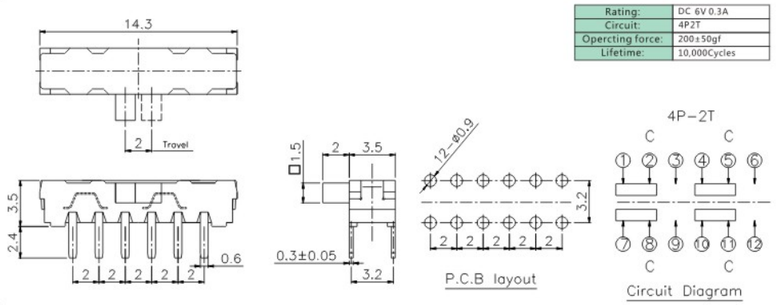

K3-2268T

Rating:	DC 6V 0.3A
Circuit:	4P2T
Operating force:	160gf±40gf
Lifetime:	10,000Cycles

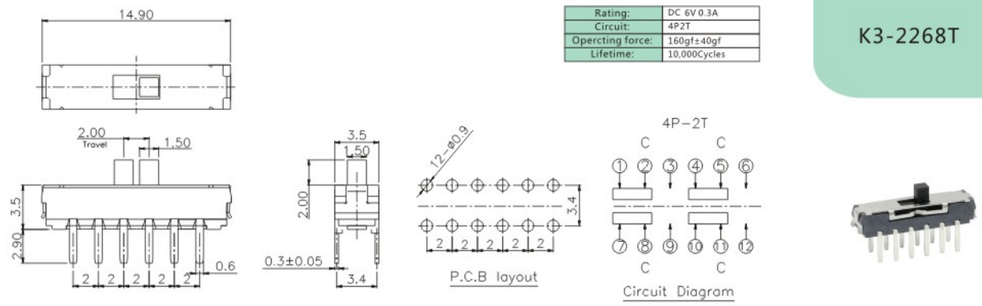

K3-2268P

Rating:	DC 6V 0.3A
Circuit:	4P2T
Operating force:	160gf±40gf
Lifetime:	10,000Cycles

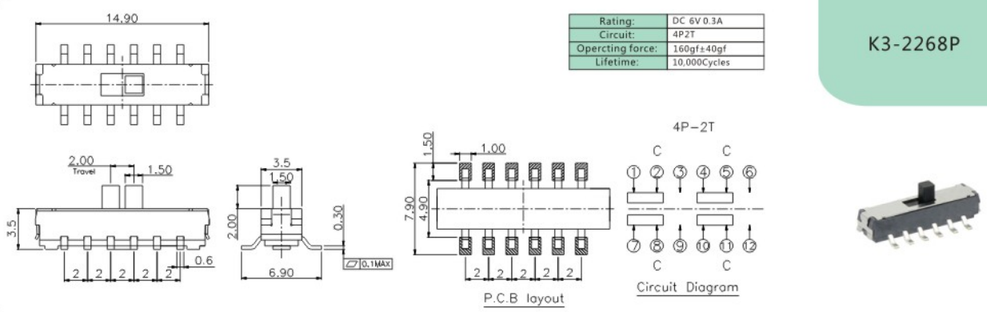

K3-2268S

Rating:	DC 6V 0.3A
Circuit:	4P2T
Operating force:	200±50gf
Lifetime:	10,000Cycles

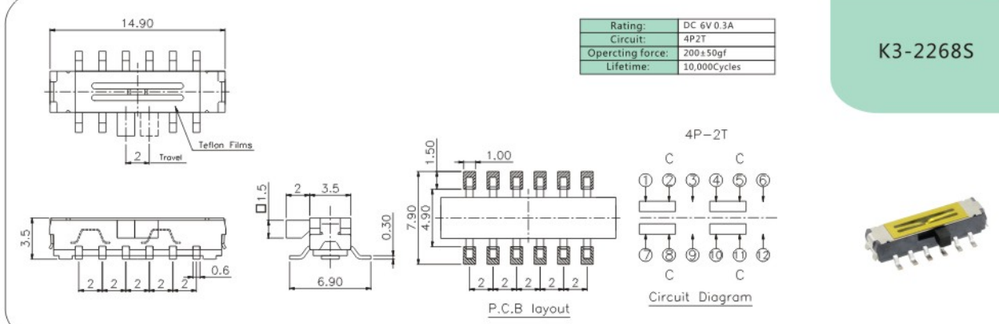

K3-2269S

Rating:	DC 6V 0.3mA
Operating force:	200 ± 50gf
Lifetime:	10,000 Cycles

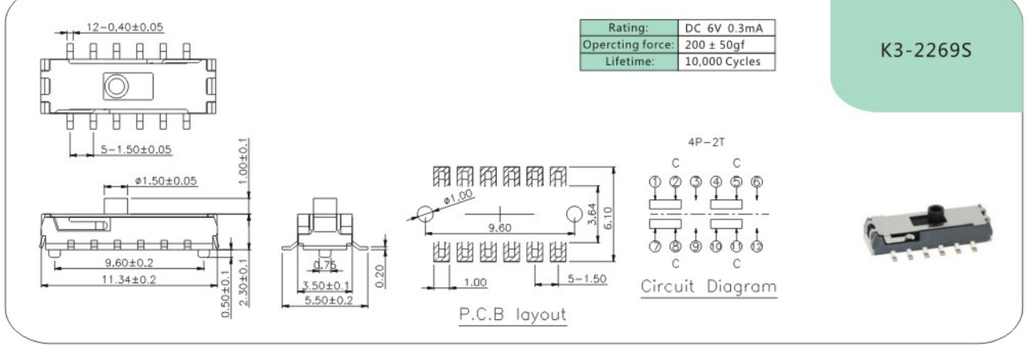

外型图 Dimensions

K3-2276S

Rating:	DC 12V 50mA
Circuit:	2P2T
Operating force:	200±50gf
Lifetime:	10,000Cycles

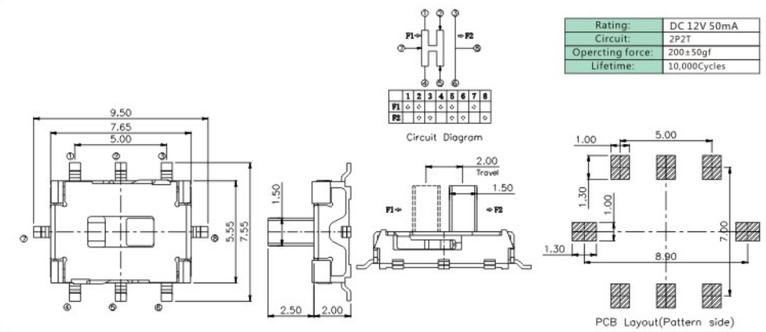

K3-2336D

Rating:	DC 6V 0.3mA
Operating force:	250±100gf
Lifetime:	10,000 Cycles

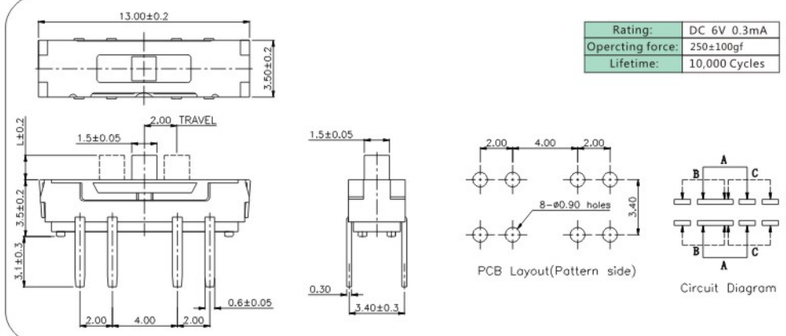

K3-2336S

Rating:	DC 6V 300mA
Operating force:	250±100gf
Lifetime:	10,000 Cycles

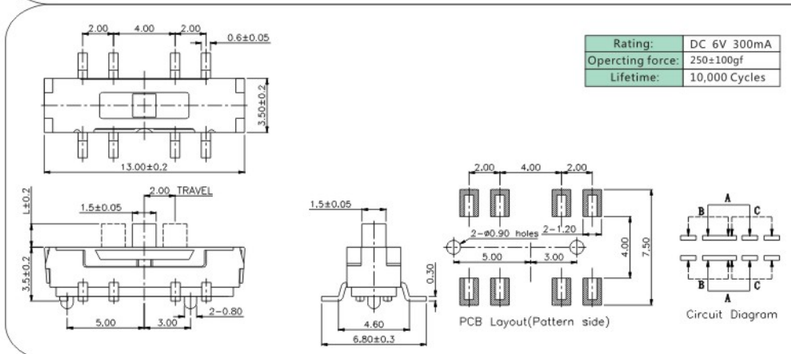

K3-2346D

Rating:	DC 6V 300mA
Operating force:	250±100gf
Lifetime:	10,000 Cycles

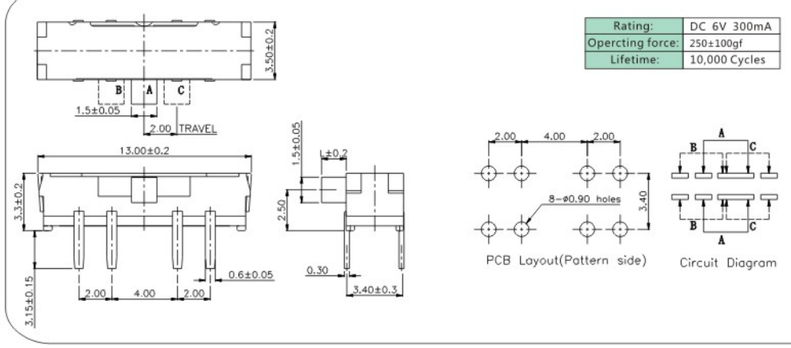

Toggle Switch 拨动开关

K3-2346S

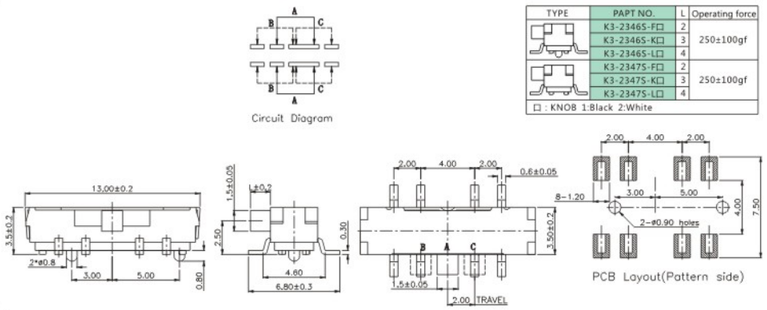

TYPE	PAPT NO.	L	Operating force
	K3-2346S-F□	2	250±100gf
	K3-2346S-K□	3	
	K3-2346S-L□	4	
	K3-2347S-F□	2	250±100gf
	K3-2347S-K□	3	
	K3-2347S-L□	4	

□ : KNOB 1:Black 2:White

K3-2380S

Rating:	DC 4V 300mA
Opercting force:	130±50gf
Lifetime:	10,000Cycles

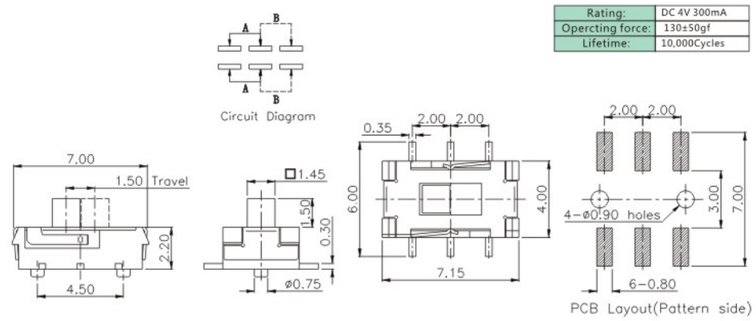

K3-2410D

Rating:	DC 12V 0.1A
Opercting force:	200±50gf
Lifetime:	10,000Cycles

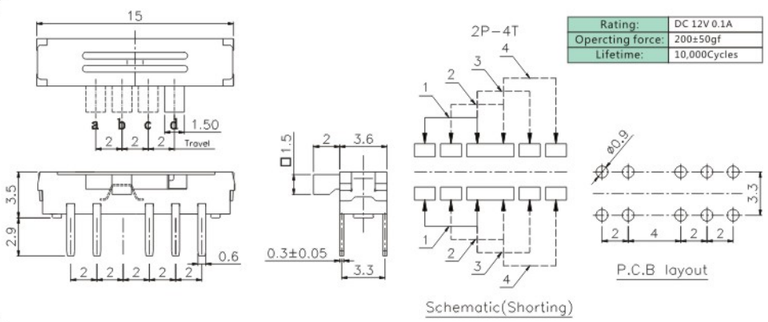

K3-2410S

Rating:	DC 12V 0.1mA
Opercting force:	230 ±50gf
Lifetime:	10,000 Cycles

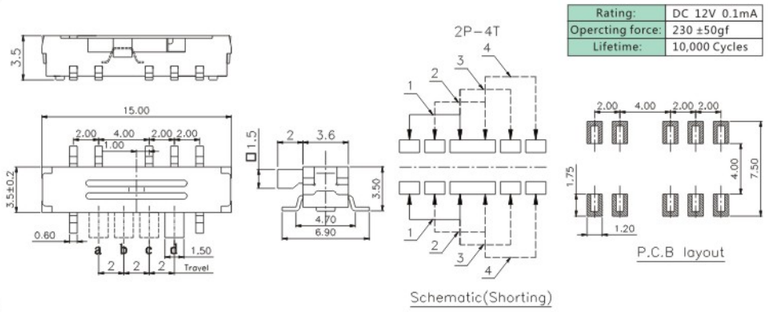

带灯开关 >>
LED Tact Switch

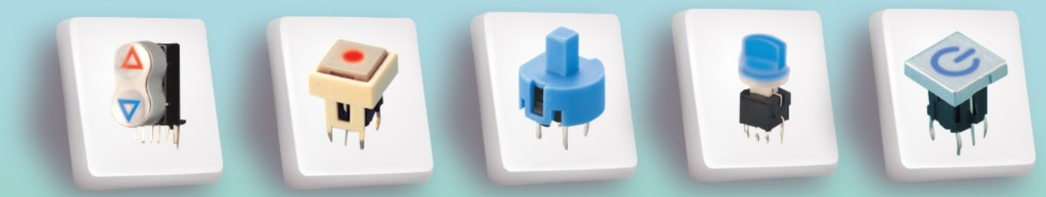

LED Tact Switch 带灯开关

特征 Features

- 具备多种结构、各样式固定支架，丰富多彩的盖片设计。
  With a fixed-stand and covers in many kinds of structure and color
- 开关声音清脆，手感、节奏感佳，灵敏度高。
  High sensitive,sounds silvery,feeling and rhythm are perfect
- 具有单色LED灯、双色灯、三色灯设计。
  It can be mounted with Singlecolor led and double colors or 3 colors led according
- 开关具有DIP、SMT焊板结构，操作类型具备按键类和轻触类。
  It can be assembled in different ways:DIP&SMT;with Pushbutton and tact for operating

规格参数 Basic specfication parameter

电气特性 Electrical Characteristics	额定负荷 Rating	见具体产品规格 See detail spec
	接触阻抗 Contact Resistance	≤100mΩ
	绝缘阻抗 Insulation Resistance	≥100mΩ DC250V
	绝缘耐电压 Withstand voltage	AC250V 1Minute
	电气寿命 Electrical Life	见具体产品规格 See detail spec
机械/可靠性特性 Mechanical/reliability Characteristics	操作力 Operating force range	见具体产品规格 See detail spec
	机械寿命 Mechanical Life	见具体产品规格 See detail spec
	使用温度 Operating temperature range	-25°C+80°C
	使用湿度 Ambient humidity used	≤85%RH
	可焊性 Solder ability	245°C ± 5°C 3S
	耐焊接热 Withstand Soldering temperature	260°C ± 5°C 3S

焊接条件 Welding conditions

- 手工焊 Hand soldering
  使用30瓦烙铁，烙铁尖端温度不超过350℃，焊接时间3S（MAX）。
  Use a soldering iron of 30 watts, Controlled at 350°C approximately 3 seconds while solder applying
- 波峰焊 Wave soldering
  峰值温度不超过260℃，焊接时间不超过5S（焊接温度曲线参考如下）。
  The peak temperature of the wave oven should be set to 260°C max.Condition for soldering Temperature Profile

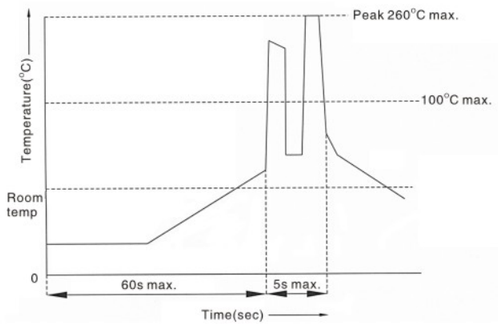

外型图 Dimensions

K6-1212A

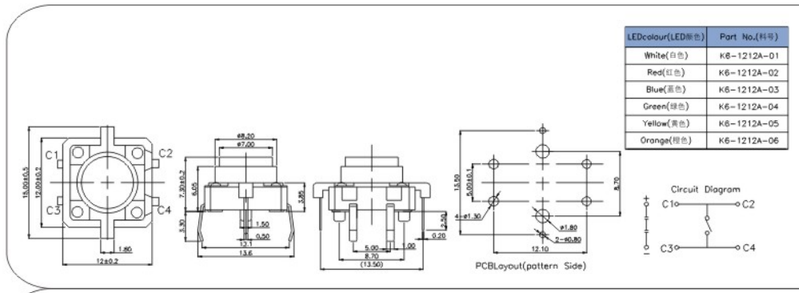

LEDcolour(LED颜色)	Part No.(料号)
White(白色)	K6-1212A-01
Red(红色)	K6-1212A-02
Blue(蓝色)	K6-1212A-03
Green(绿色)	K6-1212A-04
Yellow(黄色)	K6-1212A-05
Orange(橙色)	K6-1212A-06

K6-1510D

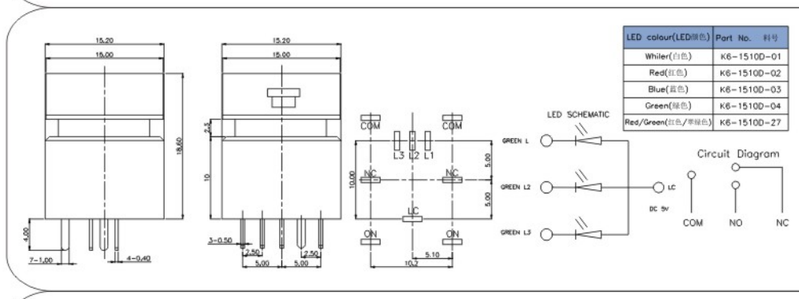

LED colour(LED颜色)	Part No. 料号
Whiler(白色)	K6-1510D-01
Red(红色)	K6-1510D-02
Blue(蓝色)	K6-1510D-03
Green(绿色)	K6-1510D-04
Red/Green(红色/常绿色)	K6-1510D-27

K6-6130D

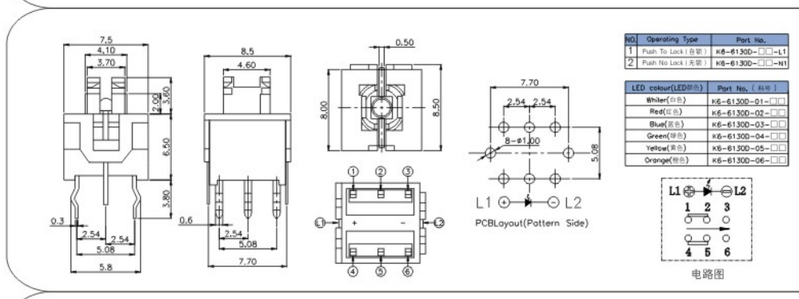

NO.	Operating Type	Part No.
1	Push To Lock (自锁)	K6-6130D-□□-L1
2	Push No Lock (无锁)	K6-6130D-□□-N1

LED colour(LED颜色)	Part No.(料号)
Whiler(白色)	K6-6130D-01-□□
Red(红色)	K6-6130D-02-□□
Blue(蓝色)	K6-6130D-03-□□
Green(绿色)	K6-6130D-04-□□
Yellow(黄色)	K6-6130D-05-□□
Orange(橙色)	K6-6130D-06-□□

K6-6131D

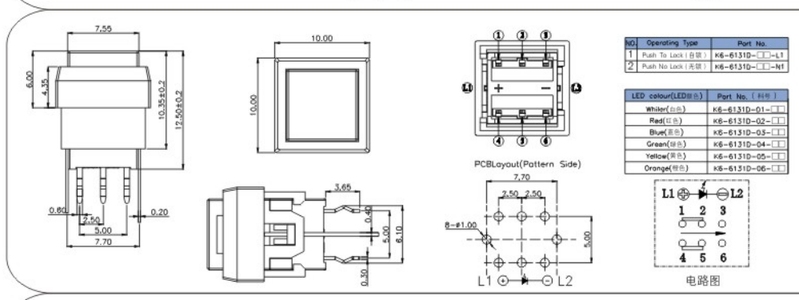

NO.	Operating Type	Part No.
1	Push To Lock (自锁)	K6-6131D-□□-L1
2	Push No Lock (无锁)	K6-6131D-□□-N1

LED colour(LED颜色)	Part No.(料号)
Whiler(白色)	K6-6131D-01-□□
Red(红色)	K6-6131D-02-□□
Blue(蓝色)	K6-6131D-03-□□
Green(绿色)	K6-6131D-04-□□
Yellow(黄色)	K6-6131D-05-□□
Orange(橙色)	K6-6131D-06-□□

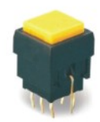

K6-6133D

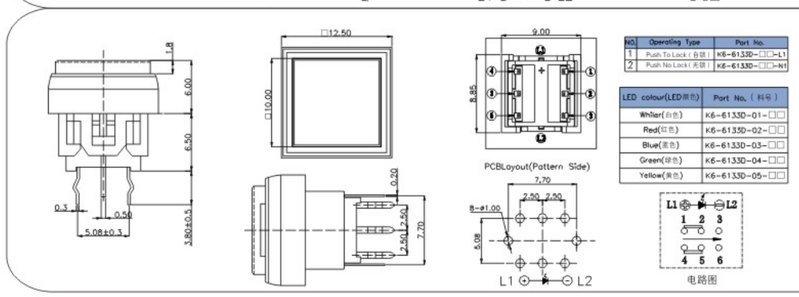

NO.	Operating Type	Part No.
1	Push To Lock (自锁)	K6-6133D-□□-L1
2	Push No Lock (无锁)	K6-6133D-□□-N1

LED colour(LED颜色)	Part No.(料号)
Whiler(白色)	K6-6133D-01-□□
Red(红色)	K6-6133D-02-□□
Blue(蓝色)	K6-6133D-03-□□
Green(绿色)	K6-6133D-04-□□
Yellow(黄色)	K6-6133D-05-□□

K6-6134D

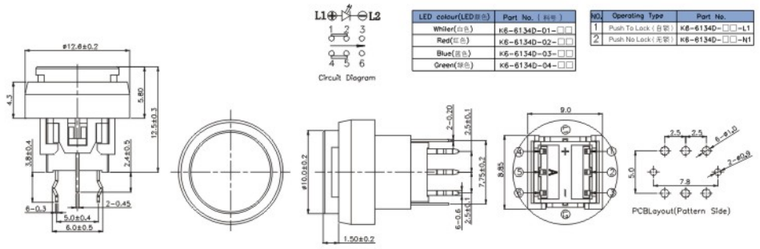

LED colour(LED颜色)	Part No.（料号）
White(白色)	K6-6134D-01-□□
Red(红色)	K6-6134D-02-□□
Blue(蓝色)	K6-6134D-03-□□
Green(绿色)	K6-6134D-04-□□

NO.	Operating Type	Part No.
1	Push To Lock（自锁）	K6-6134D-□□-L1
2	Push No Lock（无锁）	K6-6134D-□□-N1

K6-6136D

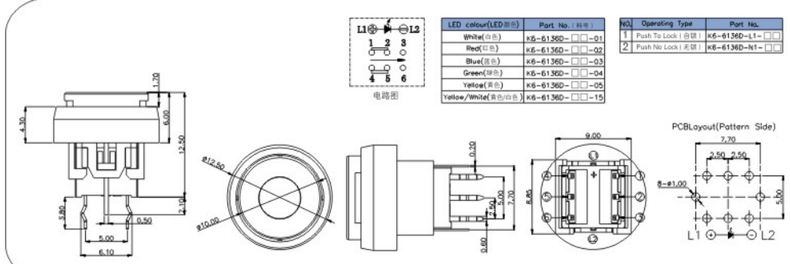

LED colour(LED颜色)	Part No.（料号）
White(白色)	K6-6136D-□□-01
Red(红色)	K6-6136D-□□-02
Blue(蓝色)	K6-6136D-□□-03
Green(绿色)	K6-6136D-□□-04
Yellow(黄色)	K6-6136D-□□-05
Yellow/White(黄色/白色)	K6-6136D-□□-15

NO.	Operating Type	Part No.
1	Push To Lock（自锁）	K6-6136D-L1-□□
2	Push No Lock（无锁）	K6-6136D-N1-□□

K6-6140D

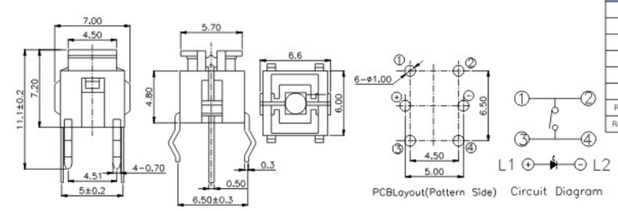

LED colour(LED颜色)	Part No.（料号）
White(白色)	K6-6140D-01
Red(红色)	K6-6140D-02
Blue(蓝色)	K6-6140D-03
Green(绿色)	K6-6140D-04
Yellow(黄色)	K6-6140D-05
Orange(橙色)	K6-6140D-06
Red(红色)/Blue(蓝色)	K6-6140D-23
Red(红色)/Green(绿色)	K6-6140D-24

K6-6141D

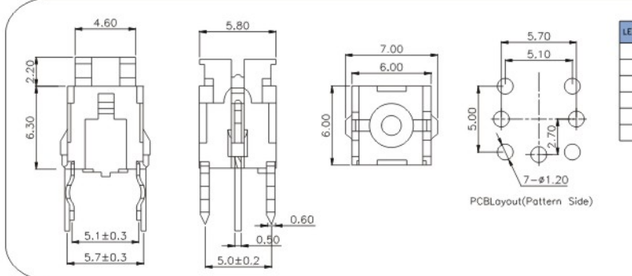

LED colour(LED颜色)	Part No.（料号）
White(白色)	K6-6141D-01
Red(红色)	K6-6141D-02
Blue(蓝色)	K6-6141D-03
Green(绿色)	K6-6141D-04
Yellow(黄色)	K6-6141D-05
Orange(橙色)	K6-6141D-06

K6-6140S

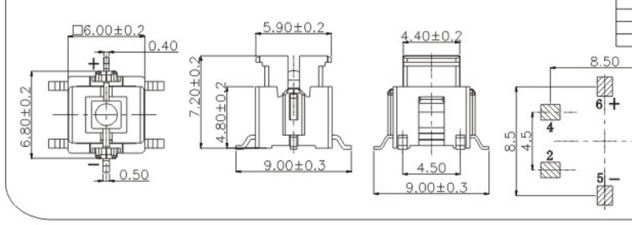

LED colour(LED颜色)	Part No.（料号）
White(白色)	K6-6140S-01
Red(红色)	K6-6140S-02
Blue(蓝色)	K6-6140S-03
Green(绿色)	K6-6140S-04
Yellow(黄色)	K6-6140S-05
Orange(橙色)	K6-6140S-06

外型图 Dimensions

K6-6141S

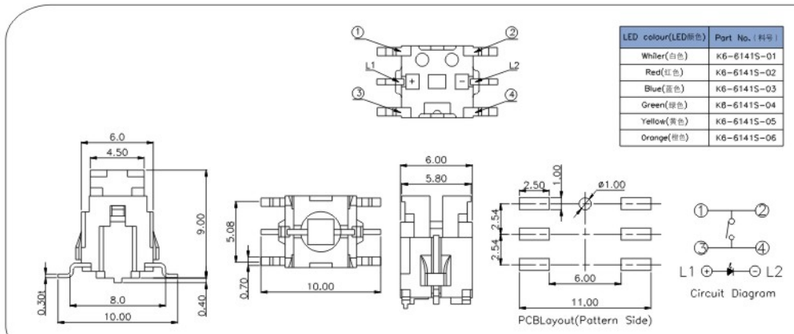

LED colour(LED颜色)	Part No.（料号）
White(白色)	K6-6141S-01
Red(红色)	K6-6141S-02
Blue(蓝色)	K6-6141S-03
Green(绿色)	K6-6141S-04
Yellow(黄色)	K6-6141S-05
Orange(橙色)	K6-6141S-06

K6-6142D

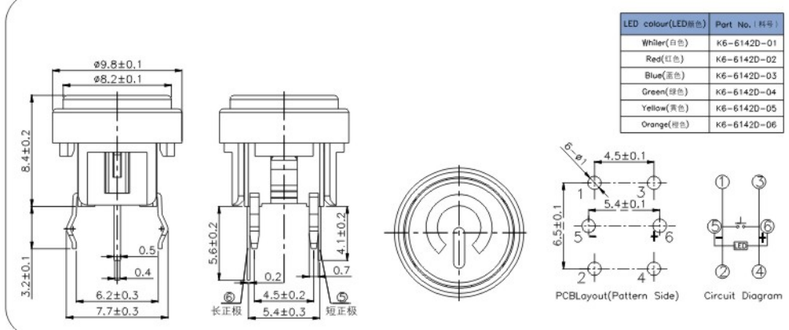

LED colour(LED颜色)	Part No.（料号）
White(白色)	K6-6142D-01
Red(红色)	K6-6142D-02
Blue(蓝色)	K6-6142D-03
Green(绿色)	K6-6142D-04
Yellow(黄色)	K6-6142D-05
Orange(橙色)	K6-6142D-06

K6-6147D

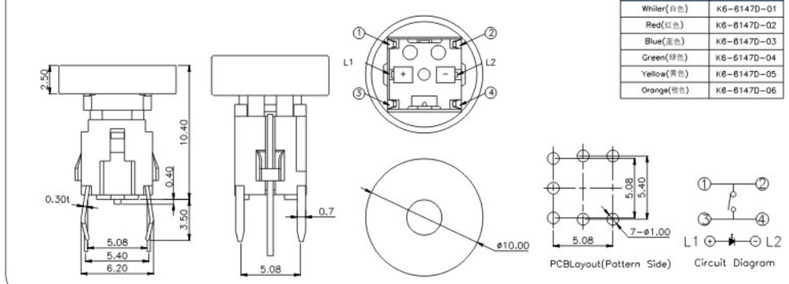

LED colour(LED颜色)	Part No.（料号）
White(白色)	K6-6147D-01
Red(红色)	K6-6147D-02
Blue(蓝色)	K6-6147D-03
Green(绿色)	K6-6147D-04
Yellow(黄色)	K6-6147D-05
Orange(橙色)	K6-6147D-06

K6-6149D

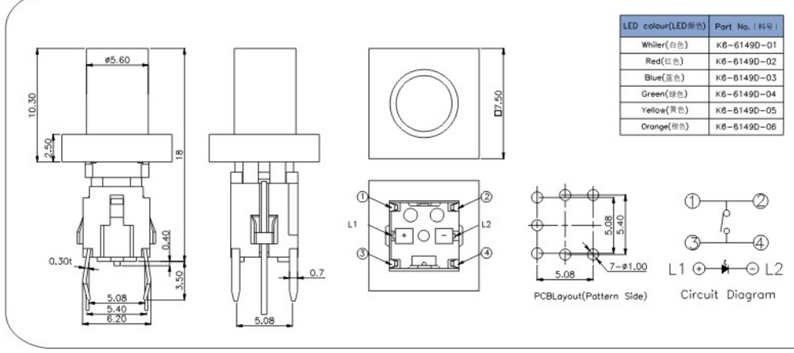

LED colour(LED颜色)	Part No.（料号）
White(白色)	K6-6149D-01
Red(红色)	K6-6149D-02
Blue(蓝色)	K6-6149D-03
Green(绿色)	K6-6149D-04
Yellow(黄色)	K6-6149D-05
Orange(橙色)	K6-6149D-06

K6-6150D

LED colour(LED颜色)	Part No.（料号）
Whiler(白色)	K6-6150D-01
Red(红色)	K6-6150D-02
Blue(蓝色)	K6-6150D-03
Green(绿色)	K6-6150D-04
Red/Green(红/翠绿)	K6-6150D-27

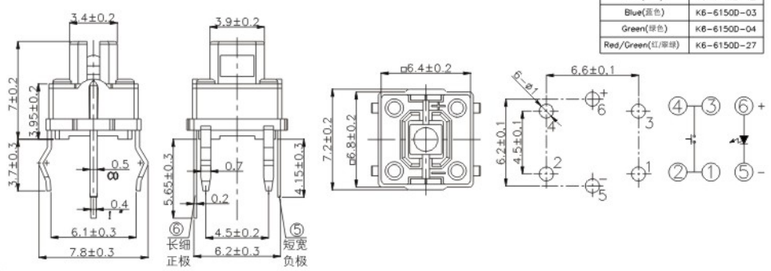

K6-6150S

LED colour(LED颜色)	Part No.（料号）
Whiler(白色)	K6-6150S-01
Red(红色)	K6-6150S-02
Blue(蓝色)	K6-6150S-03
Green(绿色)	K6-6150S-04
Yellow(黄色)	K6-6150S-05
Orange(橙色)	K6-6150S-06

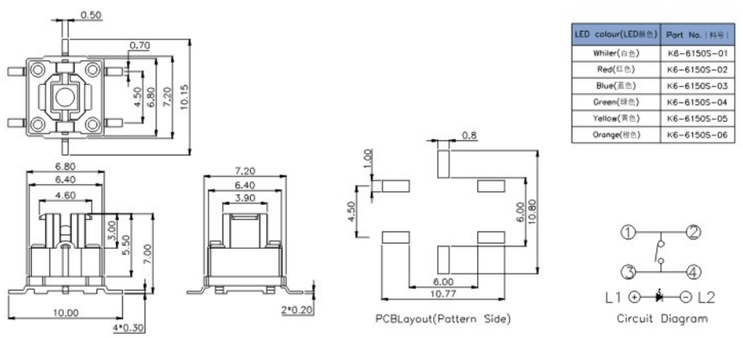

K6-6151D

LED colour(LED颜色)	Part No.（料号）
Red(红色)/Blue(蓝色)	K6-6151D-23
Red(红色)/Green(绿色)	K6-6151D-24

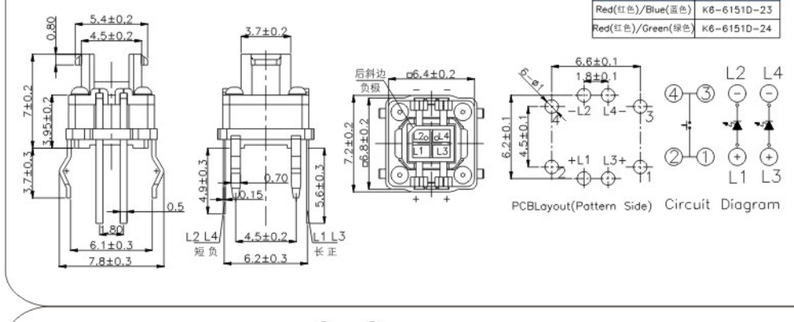

K6-6151F

LED colour(LED颜色)	Part No.（料号）
Whiler(白色)	K6-6151F-01
Red(红色)	K6-6151F-02
Blue(蓝色)	K6-6151F-03
Green(绿色)	K6-6151F-04
Yellow/Green(黄色/绿色)	K6-6151F-45
Red/Blue(红色/蓝色)	K6-6151F-23
Red/Green(红色/绿色)	K6-6151F-24

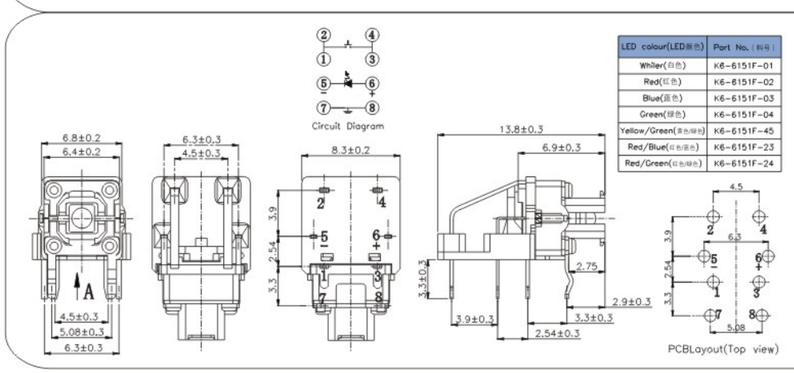

外型图 Dimensions

K6-6151S

LED colour(LED颜色)	Part No.（料号）
Red(红色)/Blue(蓝色)	K6-61515-23
Red(红色)/Green(绿色)	K6-61515-24

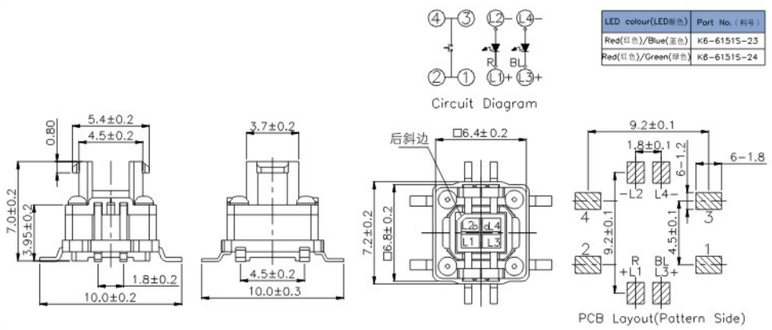

K6-6152F

LED colour(LED颜色)	Part No.（料号）
Whiler(白色)	K6-6152F-01
Red(红色)	K6-6152F-02
Blue(蓝色)	K6-6152F-03
Green(绿色)	K6-6152F-04

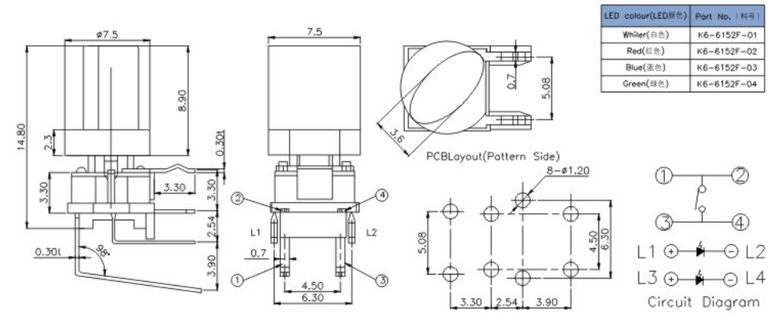

K6-6153D

LED colour(LED颜色)	Part No.（料号）
Whiler(白色)	K6-6153D-01
Red(红色)	K6-6153D-02
Blue(蓝色)	K6-6153D-03
Green(绿色)	K6-6153D-04

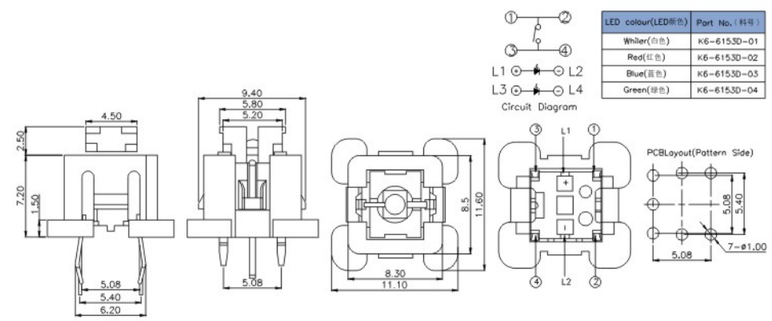

K6-6156F

LED colour(LED颜色)	Part No.（料号）
Whiler(白色)	K6-6156F-01
Red(红色)	K6-6156F-02
Blue(蓝色)	K6-6156F-03
Green(绿色)	K6-6156F-04
Yellow/Green(黄色/绿色)	K6-6156F-45
Red/Blue(红色/蓝色)	K6-6156F-23
Red/Green(红色/绿色)	K6-6156F-24

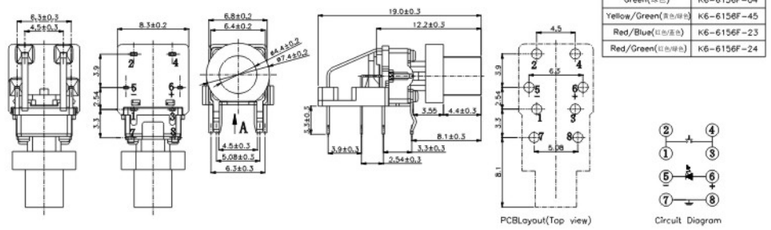

K6-6157S

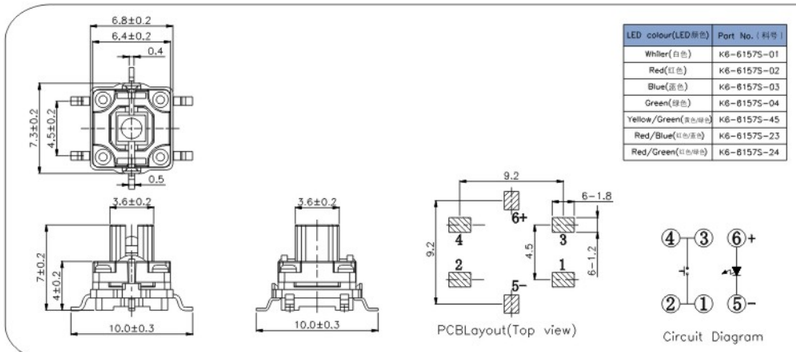

LED colour(LED颜色)	Part No.(料号)
Whiler(白色)	K6-6157S-01
Red(红色)	K6-6157S-02
Blue(蓝色)	K6-6157S-03
Green(绿色)	K6-6157S-04
Yellow/Green(黄色/绿色)	K6-6157S-45
Red/Blue(红色/蓝色)	K6-6157S-23
Red/Green(红色/绿色)	K6-6157S-24

IP67

K6-6161D

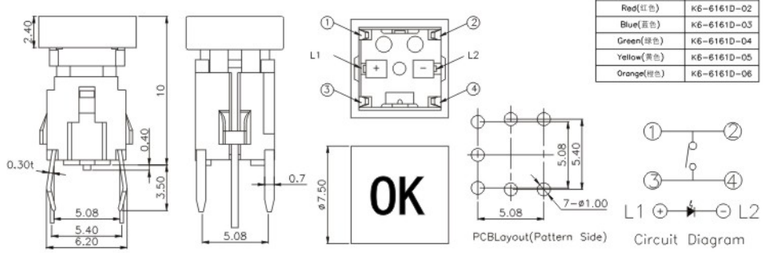

LED colour(LED颜色)	Part No.(料号)
Whiler(白色)	K6-6161D-01
Red(红色)	K6-6161D-02
Blue(蓝色)	K6-6161D-03
Green(绿色)	K6-6161D-04
Yellow(黄色)	K6-6161D-05
Orange(橙色)	K6-6161D-06

K6-6162D

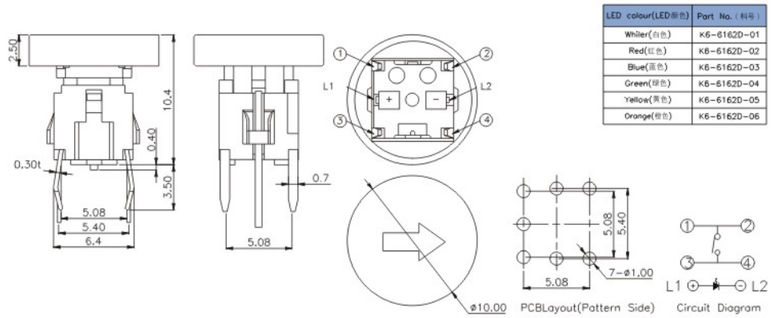

LED colour(LED颜色)	Part No.(料号)
Whiler(白色)	K6-6162D-01
Red(红色)	K6-6162D-02
Blue(蓝色)	K6-6162D-03
Green(绿色)	K6-6162D-04
Yellow(黄色)	K6-6162D-05
Orange(橙色)	K6-6162D-06

K6-6163D

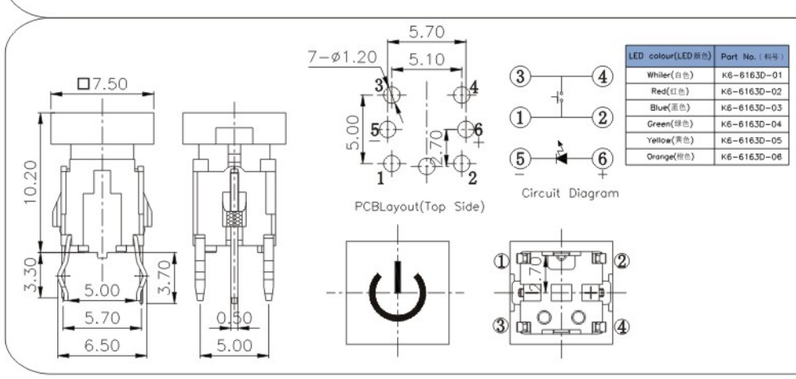

LED colour(LED颜色)	Part No.(料号)
Whiler(白色)	K6-6163D-01
Red(红色)	K6-6163D-02
Blue(蓝色)	K6-6163D-03
Green(绿色)	K6-6163D-04
Yellow(黄色)	K6-6163D-05
Orange(橙色)	K6-6163D-06

外型图 Dimensions

K6-6164D

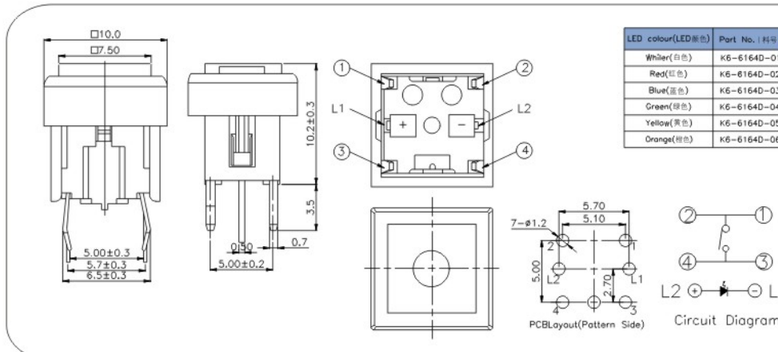

LED colour(LED颜色)	Part No.(料号)
Whiler(白色)	K6-6164D-01
Red(红色)	K6-6164D-02
Blue(蓝色)	K6-6164D-03
Green(绿色)	K6-6164D-04
Yellow(黄色)	K6-6164D-05
Orange(橙色)	K6-6164D-06

K6-6165D

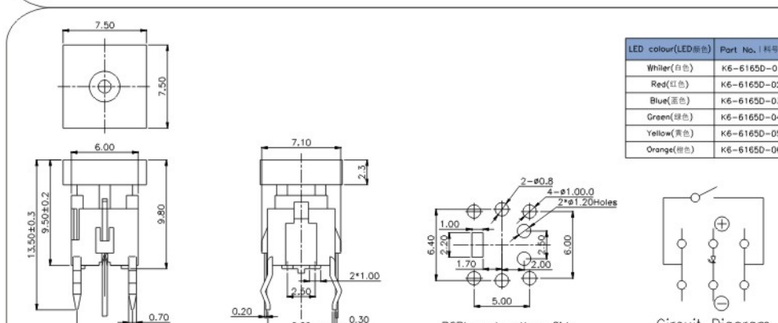

LED colour(LED颜色)	Part No.(料号)
Whiler(白色)	K6-6165D-01
Red(红色)	K6-6165D-02
Blue(蓝色)	K6-6165D-03
Green(绿色)	K6-6165D-04
Yellow(黄色)	K6-6165D-05
Orange(橙色)	K6-6165D-06

K6-6270D

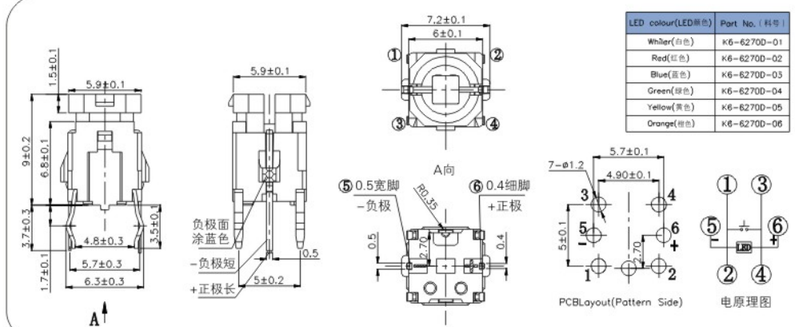

LED colour(LED颜色)	Part No.(料号)
Whiler(白色)	K6-6270D-01
Red(红色)	K6-6270D-02
Blue(蓝色)	K6-6270D-03
Green(绿色)	K6-6270D-04
Yellow(黄色)	K6-6270D-05
Orange(橙色)	K6-6270D-06

K6-6270S

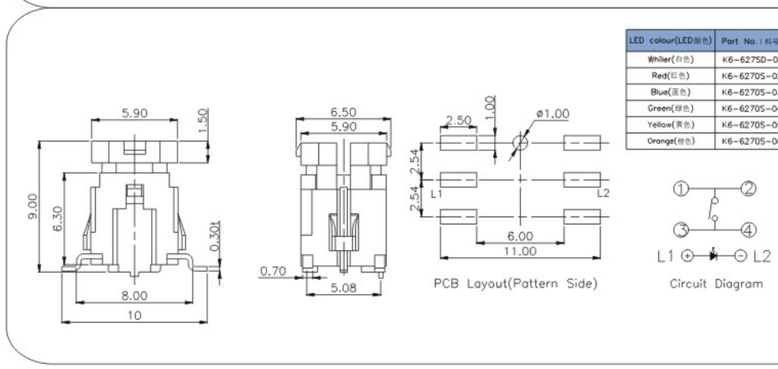

LED colour(LED颜色)	Part No.(料号)
Whiler(白色)	K6-6275D-01
Red(红色)	K6-6270S-02
Blue(蓝色)	K6-6270S-03
Green(绿色)	K6-6270S-04
Yellow(黄色)	K6-6270S-05
Orange(橙色)	K6-6270S-06

K6-6271D

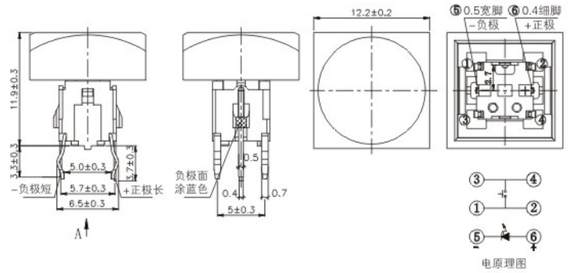

LED colour(LED颜色)	Part No.(料号)
Whiler(白色)	K6-6271D-01
Red(红色)	K6-6271D-02
Blue(蓝色)	K6-6271D-03
Green(绿色)	K6-6271D-04
Yellow(黄色)	K6-6271D-05
Orange(橙色)	K6-6271D-06

K6-6272S

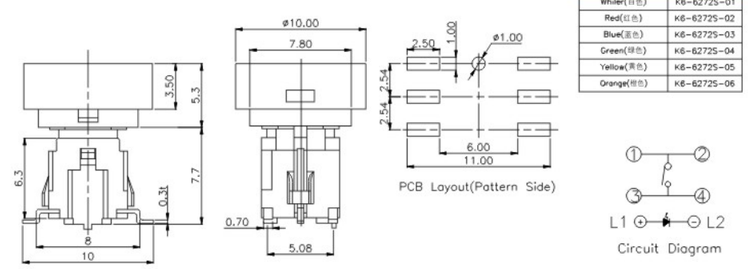

LED colour(LED颜色)	Part No.(料号)
Whiler(白色)	K6-6272S-01
Red(红色)	K6-6272S-02
Blue(蓝色)	K6-6272S-03
Green(绿色)	K6-6272S-04
Yellow(黄色)	K6-6272S-05
Orange(橙色)	K6-6272S-06

K6-6274D

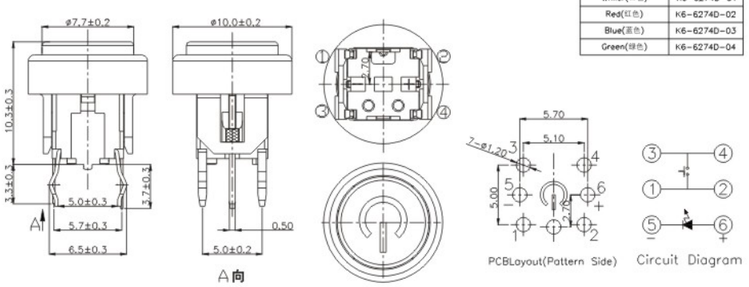

LED colour(LED颜色)	Part No.(料号)
Whiler(白色)	K6-6274D-01
Red(红色)	K6-6274D-02
Blue(蓝色)	K6-6274D-03
Green(绿色)	K6-6274D-04

K6-6275D

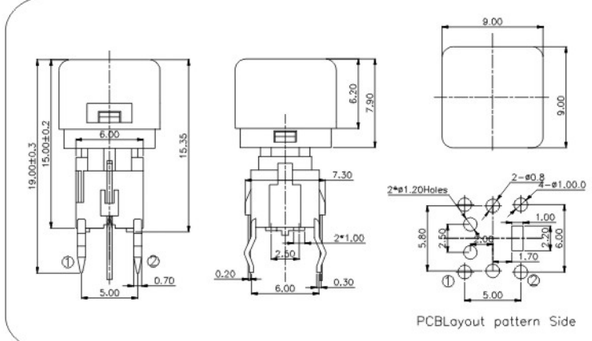

LED colour(LED颜色)	Part No.(料号)
Whiler(白色)	K6-6275D-01
Red(红色)	K6-6275D-02
Blue(蓝色)	K6-6275D-03
Green(绿色)	K6-6275D-04
Yellow(黄色)	K6-6275D-05
Orange(橙色)	K6-6275D-06

外型图 Dimensions

K6-6275S

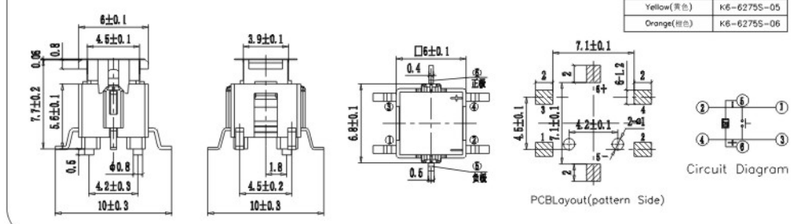

LED colour(LED颜色)	Part No.(料号)
Whiler(白色)	K6-6275S-01
Red(红色)	K6-6275S-02
Blue(蓝色)	K6-6275S-03
Green(绿色)	K6-6275S-04
Yellow(黄色)	K6-6275S-05
Orange(橙色)	K6-6275S-06

K6-6276D

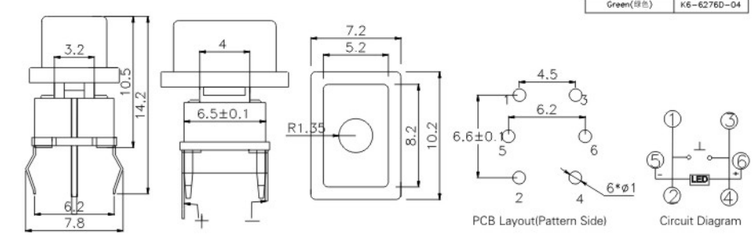

LED colour(LED颜色)	Part No.(料号)
Whiler(白色)	K6-6276D-01
Red(红色)	K6-6276D-02
Blue(蓝色)	K6-6276D-03
Green(绿色)	K6-6276D-04

K6-6277D

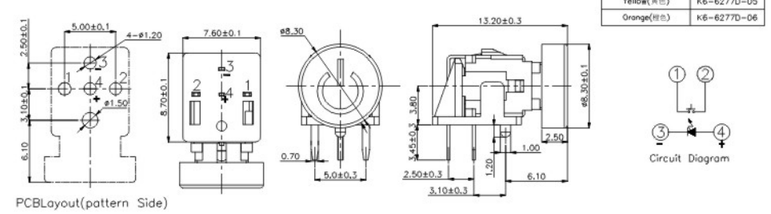

LED colour(LED颜色)	Part No.(料号)
Whiler(白色)	K6-6277D-01
Red(红色)	K6-6277D-02
Blue(蓝色)	K6-6277D-03
Green(绿色)	K6-6277D-04
Yellow(黄色)	K6-6277D-05
Orange(橙色)	K6-6277D-06

K6-6279D

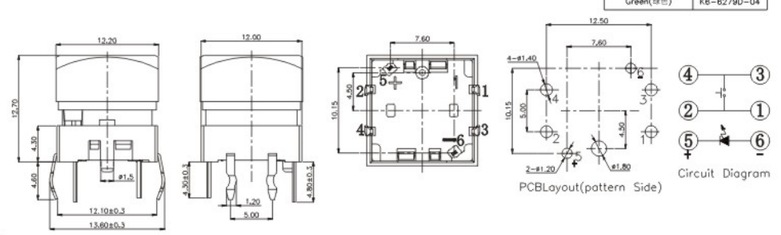

LED colour(LED颜色)	Part No.(料号)
Whiler(白色)	K6-6279D-01
Red(红色)	K6-6279D-02
Blue(蓝色)	K6-6279D-03
Green(绿色)	K6-6279D-04

LED Tact Switch 带灯开关

K6-6610D

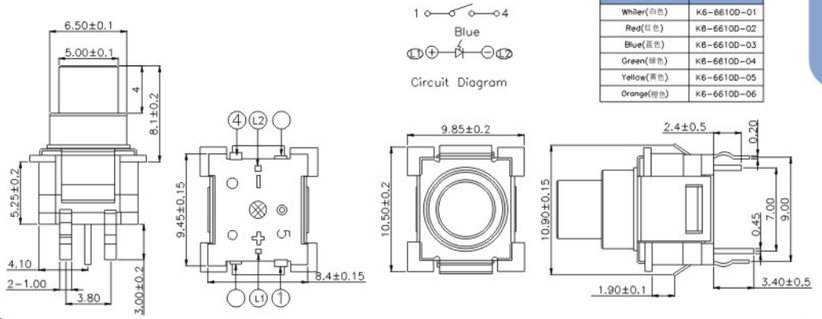

LED colour(LED颜色)	Part No.(料号)
Whiler(白色)	K6-6610D-01
Red(红色)	K6-6610D-02
Blue(蓝色)	K6-6610D-03
Green(绿色)	K6-6610D-04
Yellow(黄色)	K6-6610D-05
Orange(橙色)	K6-6610D-06

K6-8811D

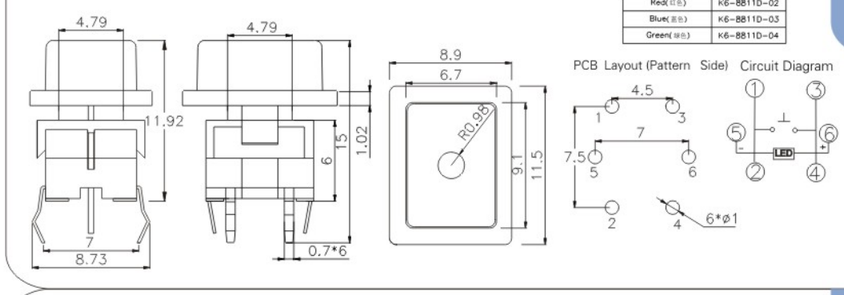

LED colour(LED颜色)	Part No.(料号)
Whiler(白色)	K6-8811D-01
Red(红色)	K6-8811D-02
Blue(蓝色)	K6-8811D-03
Green(绿色)	K6-8811D-04

K6-8859D

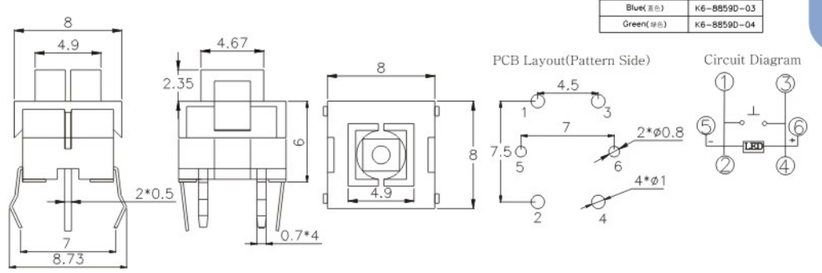

LED colour(LED颜色)	Part No.(料号)
Whiler(白色)	K6-8859D-01
Red(红色)	K6-8859D-02
Blue(蓝色)	K6-8859D-03
Green(绿色)	K6-8859D-04

按键开关 >>
Push Switch

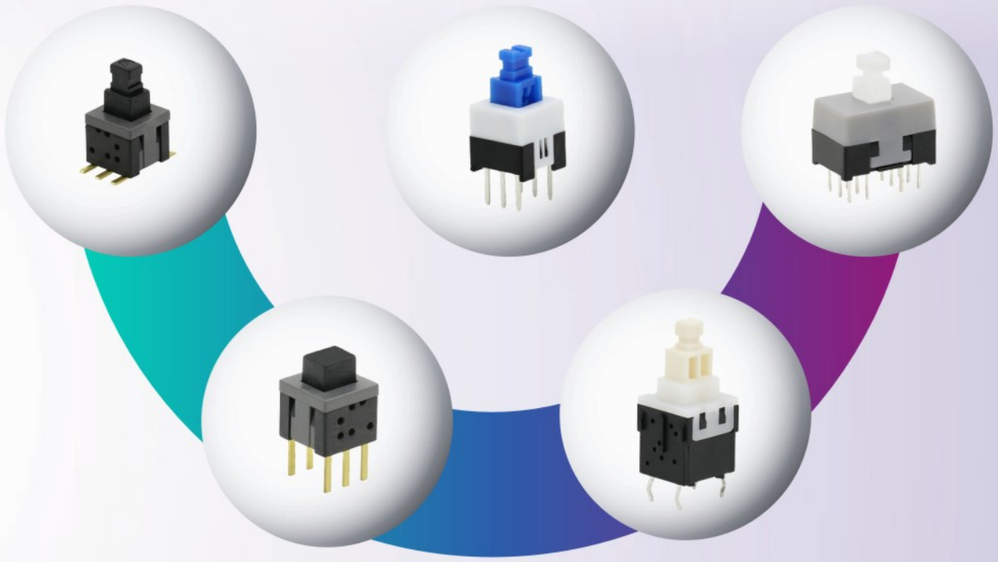

Push Switch 按键开关

特征 Features

- 具备多种外形尺寸设计。
  There are many dimensions available,such as
- 开关声音清脆，手感、节奏感佳，灵敏度高。
  High sensitive,sounds silvery,feeling and rhythm are perfect
- 产品锁芯机构具备无锁和有锁不同结构设计。
  There are 2 operating modes:Self-Lock and Non-Lock
- 可依据客户要求设计不同端子脚位和不同按键高度产品。
  The state of terminals and height of pushbutton can be designed caaording

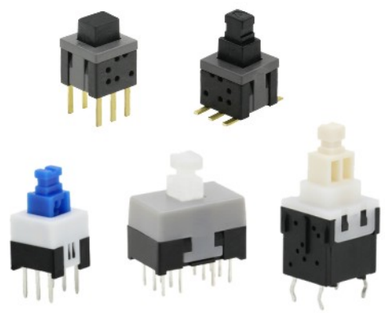

规格参数 Basic specfication parameter

电气特性 Electrical Characteristics	额定负荷 Rating	DC 30V 0.1mA
	接触阻抗 Contact Resistance	≤100mΩ
	绝缘阻抗 Insulation Resistance	≥100mΩ DC500V
	绝缘耐电压 Withstand voltage	AC500V 1Minute
	电气寿命 Electrical Life	10,000Cycles above(Load)
机械/可靠性特性 Mechanical/reliability Characteristics	操作力 Operating force range	见具体产品规格 See detail spec
	机械寿命 Mechanical Life	10,000Cycles(NO Load)
	使用温度 Operating temperature range	−25°C+80°C
	使用湿度 Ambient humidity used	≤85%RH
	可焊性 Solder ability	245°C ± 5°C 3S ± 0.5S
	耐焊接热 Withstand Soldering temperature	260°C ± 5°C 3S ± 1S

焊接条件 Welding conditions

- 手工焊 Hand soldering
  使用30瓦烙铁，烙铁尖端温度不超过350℃，焊接时间3S(MAX)。
  Use a soldering iron of 30 watts, Controlled at 350°C approximately 3 seconds while solder applying
- 波峰焊 Wave soldering
  峰值温度不超过260℃，焊接时间不超过5S（焊接温度曲线参考如下）。
  The peak temperature of the wave oven should be set to 260°C max.Condition for soldering Temperature Profile

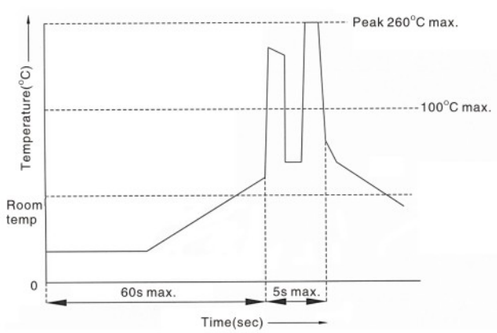

外型图 Dimensions

K8-1112D

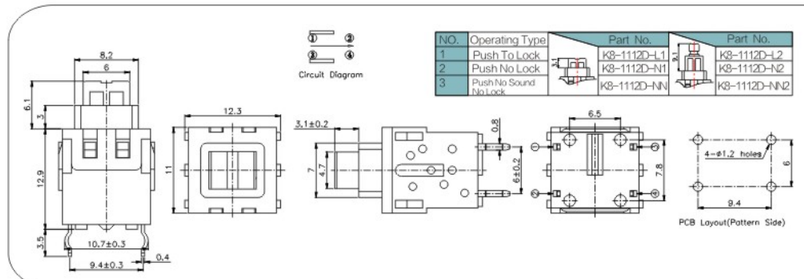

NO.	Operating Type	Part No.	Part No.
1	Push To Lock	K8-1112D-L1	K8-1112D-L2
2	Push No Lock	K8-1112D-N1	K8-1112D-N2
3	Push No Sound No Lock	K8-1112D-NN	K8-1112D-NN2

K8-1613D

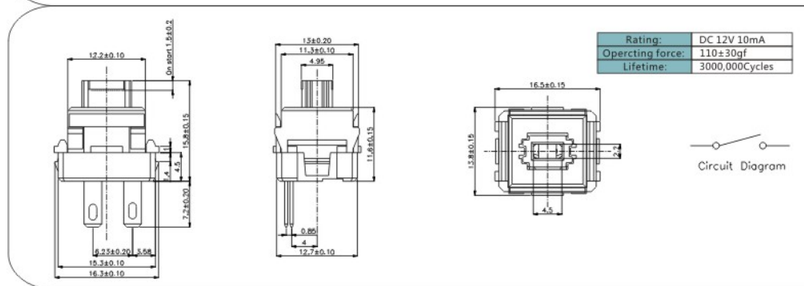

Rating:	DC 12V 10mA
Operating force:	110±30gf
Lifetime:	3000,000Cycles

K8-2213A

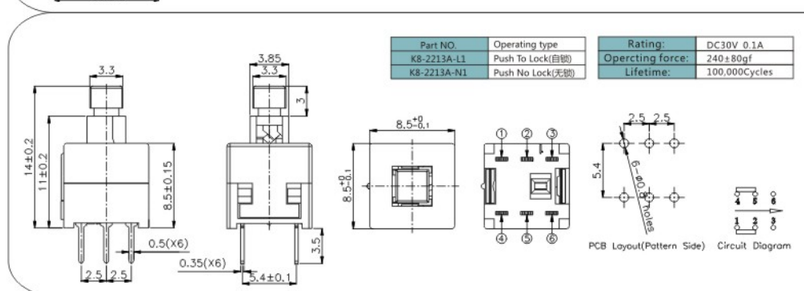

Part NO.	Operating type
K8-2213A-L1	Push To Lock(自锁)
K8-2213A-N1	Push No Lock(无锁)

Rating:	DC30V 0.1A
Operating force:	240±80gf
Lifetime:	100,000Cycles

K8-5851S

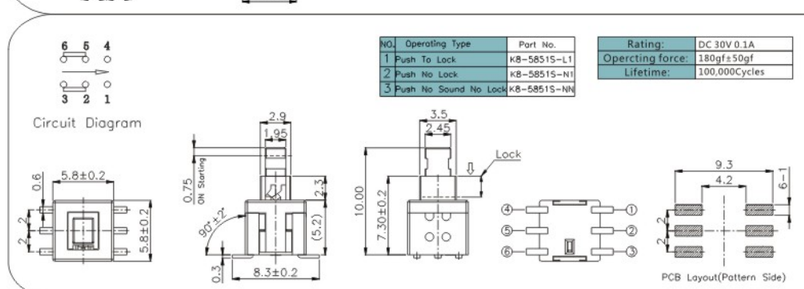

NO.	Operating Type	Part No.
1	Push To Lock	K8-5851S-L1
2	Push No Lock	K8-5851S-N1
3	Push No Sound No Lock	K8-5851S-NN

Rating:	DC 30V 0.1A
Operating force:	180gf±50gf
Lifetime:	100,000Cycles

K8-5851D

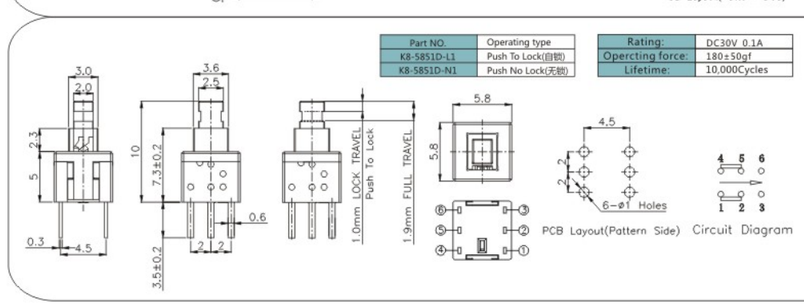

Part NO.	Operating type
K8-5851D-L1	Push To Lock(自锁)
K8-5851D-N1	Push No Lock(无锁)

Rating:	DC30V 0.1A
Operating force:	180±50gf
Lifetime:	10,000Cycles

K8-5851E

Part NO.	Operating type
K8-5851E-L1	Push To Lock(自锁)
K8-5851E-N1	Push No Lock(自锁)

Rating:	DC30V 0.1A
Operating force:	180±50gf
Lifetime:	10,000Cycles

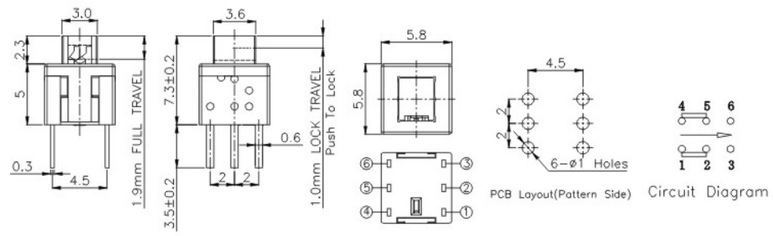

K8-5852S

NO.	Operating Type	Part No.
1	Push To Lock	K8-5852S-L1
2	Push No Lock	K8-5852S-N1
3	Push No Sound No Lock	K8-5852S-NN

Rating:	DC 30V 0.1A
Operating force:	180gf±50gf
Lifetime:	100,000Cycles

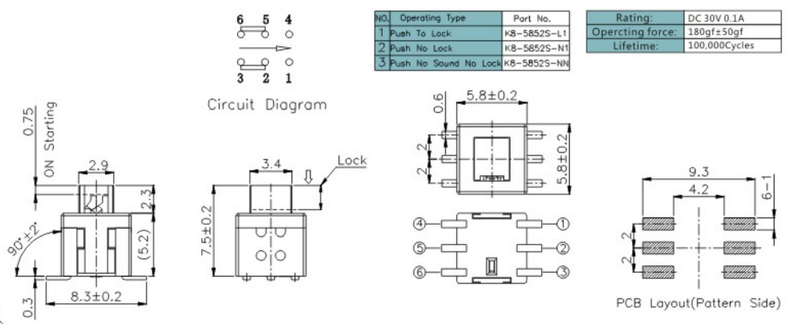

K8-5854D

Rating:	DC30V 0.1A
Operating force:	220±50gf
Lifetime:	10,000Cycles

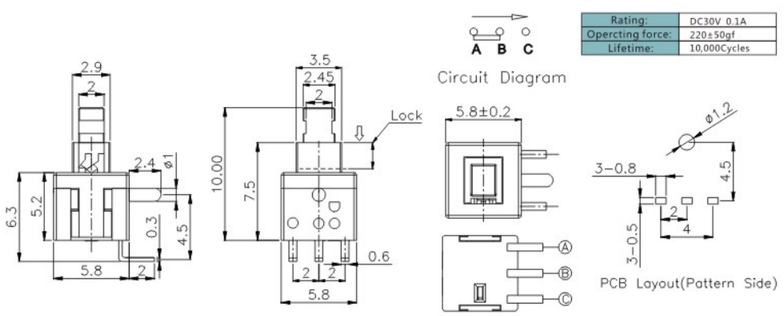

K8-5854T

NO.	Operating Type	Part No.
1	Push To Lock	K8-5854T-L1
2	Push No Lock	K8-5854T-N1

Rating:	DC30V 0.1A
Operating force:	230gf ± 50gf
Lifetime:	5,000Cycles

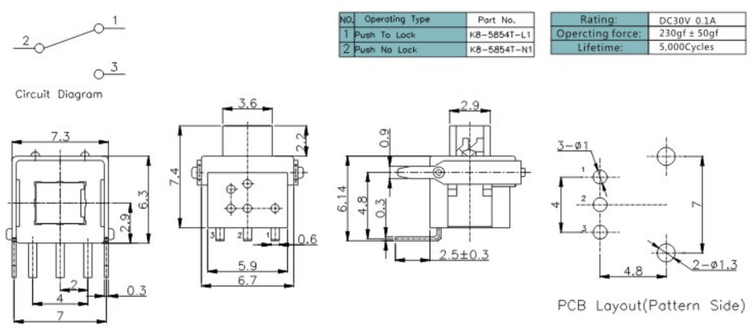

外型图 Dimensions

K8-5854P

NO.	Operating Type	Part No.
1	Push To Lock	K8-5854P-L1
2	Push No Lock	K8-5854P-N1

Rating:	DC30V 0.1A
Operating force:	230gf ± 50gf
Lifetime:	5,000Cycles

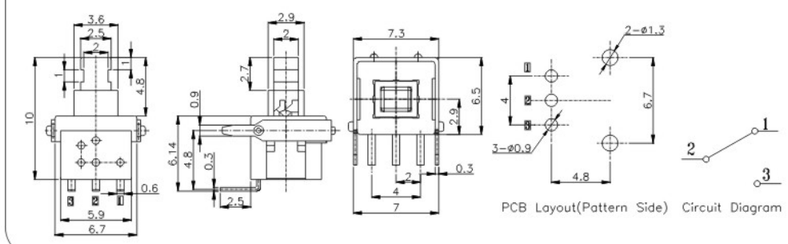

K8-5855D

NO.	Operating Type	Part No.
1	Push To Lock	K8-5855D-L1
2	Push No Lock	K8-5855D-N1
3	Push No Sound No Lock	K8-5855D-NN

Rating:	DC30V 0.1A
Operating force:	220±50gf
Lifetime:	10,000Cycles

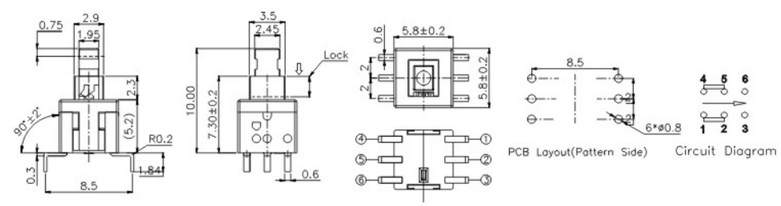

K8-5856S

NO.	Operating Type	Part No.
1	Push To Lock	K8-5856S-L1
2	Push No Lock	K8-5856S-N1

Rating:	DC30V 0.1A
Operating force:	180±50gf
Lifetime:	10,000Cycles

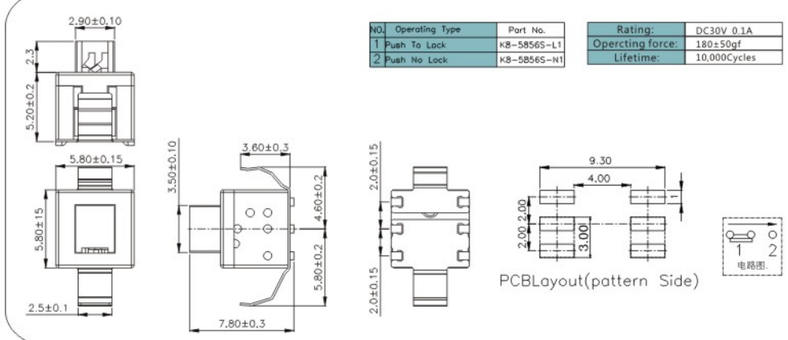

K8-7071D

Part NO.	Operating type
K8-7071D-L1	Push To Lock(自锁)
K8-7071D-N1	Push No Lock(无锁)

Rating:	DC30V 0.1A
Operating force:	230±50gf
Lifetime:	100,000Cycles

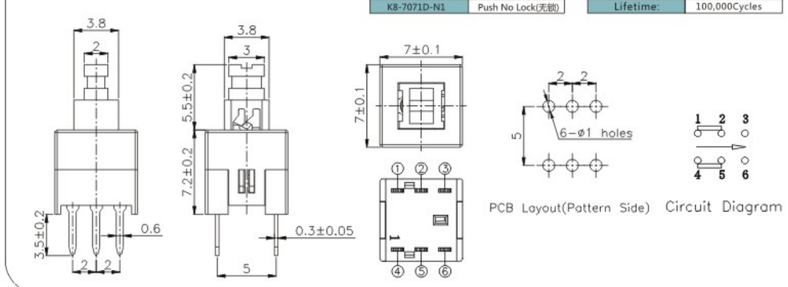

Push Switch 按键开关

K8-8081D

Part NO.	Operating type
K8-8081D-L1	Push To Lock(自锁)
K8-8081D-N1	Push No Lock(无锁)

Rating:	DC30V 0.1A
Opercting force:	180±50gf
Lifetime:	100,000Cycles

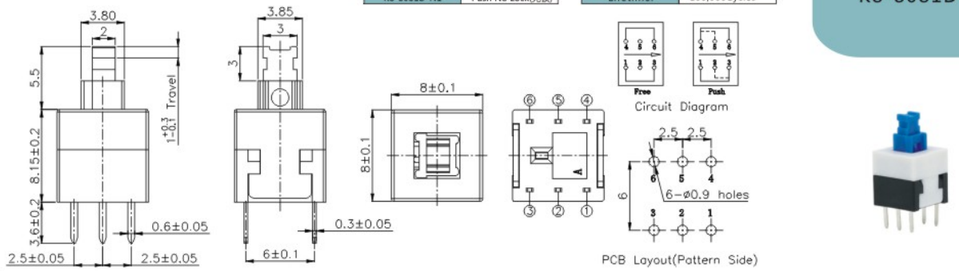

K8-8081S

Rating:	DC 12V 10mA
Opercting force:	250±50gf
Lifetime:	30,000Cycles

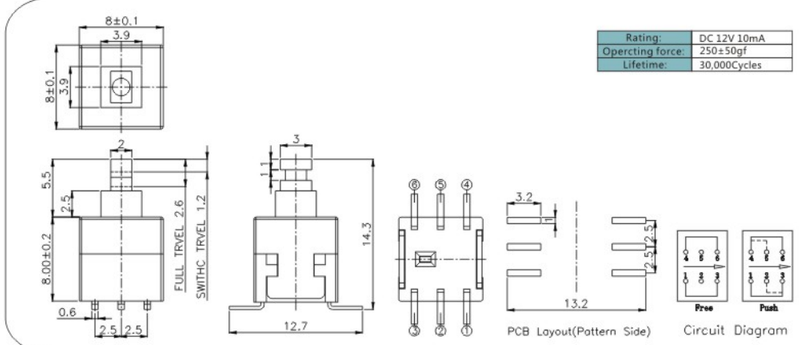

K8-8484F

NO.	Operating Type	Part No.
1	Push To Lock	K8-8484F-L1W
2	Push No Lock	K8-8484F-N1W
3	Push No Sound No Lock	K8-8484F-NNW

Rating:	DC30V 0.1A
Opercting force:	240±80gf
Lifetime:	100,000Cycles

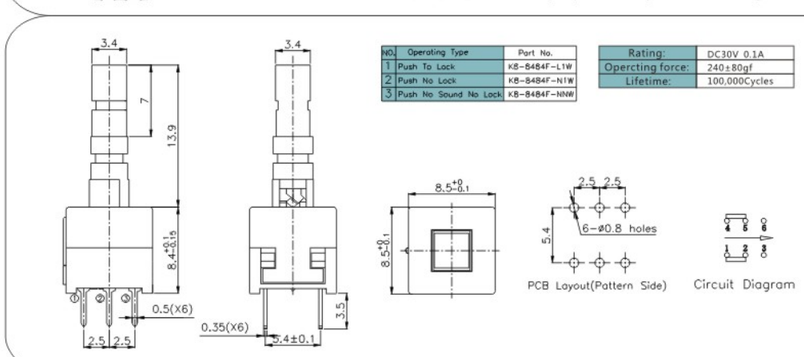

K8-8585D

NO.	Operating Type	Part No.
1	Push To Lock	K8-8585D-L1
2	Push No Lock	K8-8585D-N1
3	Push No Sound No Lock	K8-8585D-NNW

Rating:	DC30V 0.1A
Opercting force:	240±80gf
Lifetime:	100,000Cycles

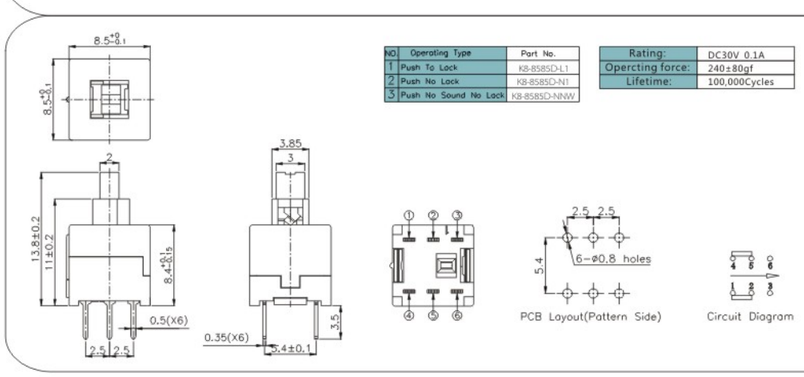

拨码开关 >>
DIP Switch

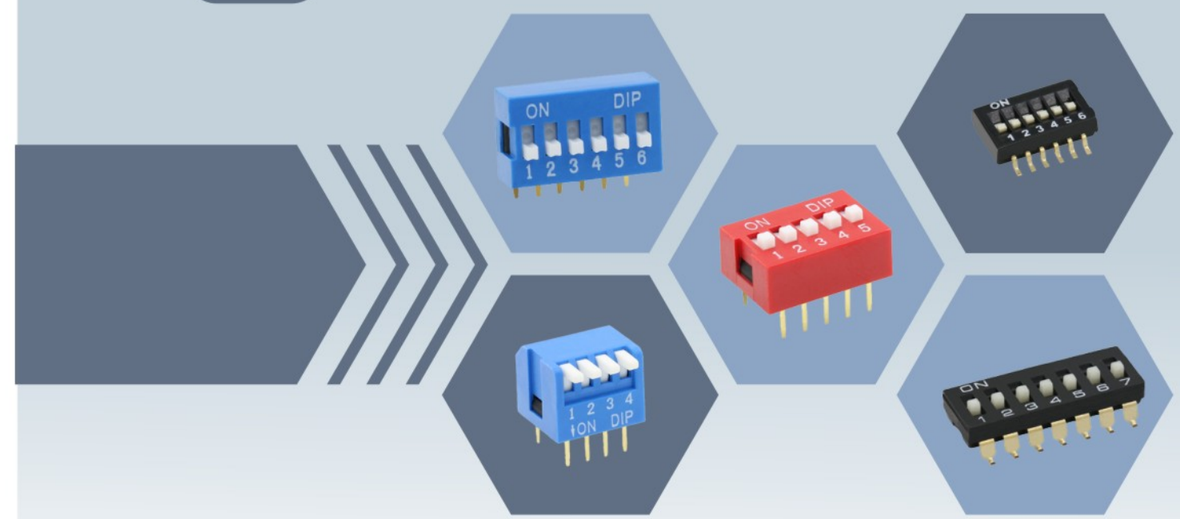

特征 Features

- ◆ 具备各种档位结构设计。
  All kinds of variable levels design
- ◆ 安装方式有DIP和SMT供选择。
  Assembling ways:DIP and SMT
- ◆ 开关滑动力均匀，段落感佳。
  The switch operating force equality,good feeling

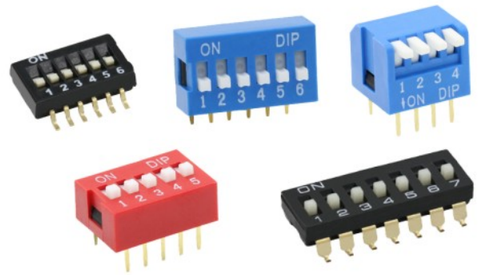

规格参数 Basic specfication parameter

电气特性 Electrical Characteristics	额定负荷 Rating	DC24V 25mA
	接触阻抗 Contact Resistance	≤100mΩ
	绝缘阻抗 Insulation Resistance	≥100mΩ DC500V
	绝缘耐电压 Withstand voltage	AC500V 1Minute
	电气寿命 Electrical Life	10,000Cycles above(Load)
机械/可靠性特性 Mechanical/reliability Characteristics	操作力 Operating force range	见具体产品规格 See detail spec
	机械寿命 Mechanical Life	10,000Cycles(NO Load)
	使用温度 Operating temperature range	-25°C+80°C
	使用湿度 Ambient humidity used	≤85%RH
	可焊性 Solder ability	245°C ± 5°C 3S
	耐焊接热 Withstand Soldering temperature	260°C ± 5°C 3S

焊接条件 Welding conditions

◆手工焊 Hand soldering
使用30瓦烙铁，烙铁尖端温度不超过350℃，焊接时间3S。
Use a soldering iron of 30 watts, Controlled at 350°C approximately 3 seconds while solder applying

◆波峰焊/回流焊Wave soldering/Reflow Soldering
峰值温度不超过260℃，焊接时间不超过5S（焊接温度曲线参考如下）。
The peak temperature of the wave oven should be set to 260°C max.Condition for soldering Temperature Profile

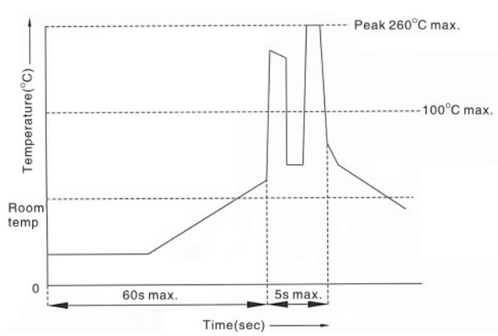

外型图 Dimensions

DA

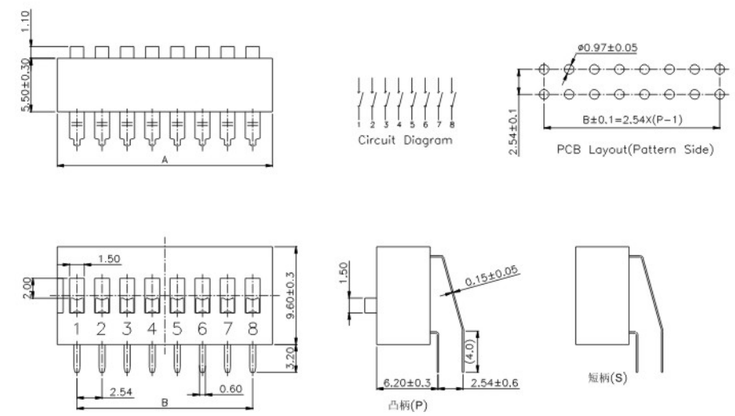

Position(位数)		1P	2P	3P	4P	5P	6P	7P	8P	9P	10P	12P
DIM.A(长度)		3.54	6.64	9.18	11.72	14.26	16.80	19.34	21.88	24.42	26.96	32.04
DIM.B(长度)		——	2.54	5.08	7.62	10.16	12.70	15.24	17.78	20.32	22.86	27.94
PART NO. 盖子/灰色(R)	凸柄(P)	DA-01RP	DA-02RP	DA-03RP	DA-04RP	DA-05RP	DA-06RP	DA-07RP	DA-08RP	DA-09RP	DA-10RP	DA-12RP
	短柄(S)	DA-01RS	DA-02RS	DA-03RS	DA-04RS	DA-05RS	DA-06RS	DA-07RS	DA-08RS	DA-09RS	DA-10RS	DA-12RS
PART NO. 盖子/黑色(B)	凸柄(P)	DA-01BP	DA-02BP	DA-03BP	DA-04BP	DA-05BP	DA-06BP	DA-07BP	DA-08BP	DA-09BP	DA-10BP	DA-12BP
	短柄(S)	DA-01BS	DA-02BS	DA-03BS	DA-04BS	DA-05BS	DA-06BS	DA-07BS	DA-08BS	DA-09BS	DA-10BS	DA-12BS

DH

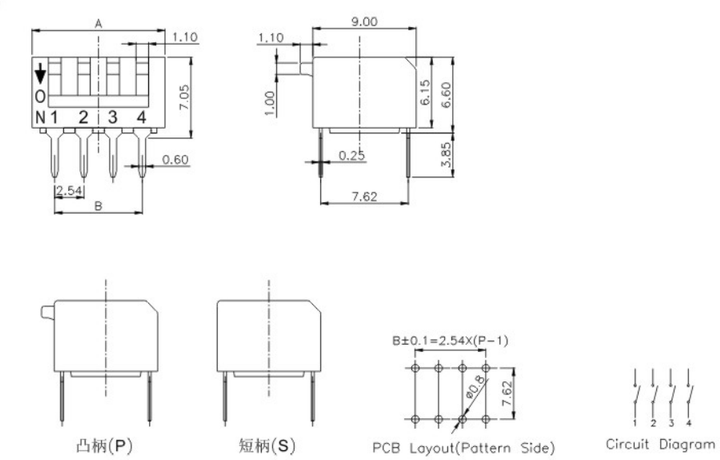

Position(位数)		2P	3P	4P	5P	6P	7P	8P	10P	12P
DIM.A(长度)		6.48	9.02	11.56	14.10	16.64	19.18	21.72	26.80	31.88
DIM.B(长度)		2.54	5.08	7.62	10.16	12.70	15.24	17.78	22.86	27.94
PART NO. 盖子/黑色(B)	凸柄(P)	DH-02BP	DH-03BP	DH-04BP	DH-05BP	DH-06BP	DH-07BP	DH-08BP	DH-10BP	DH-12BP
	短柄(S)	DH-02BS	DH-03BS	DH-04BS	DH-05BS	DH-06BS	DH-07BS	DH-08BS	DH-10BS	DH-12BS

DP

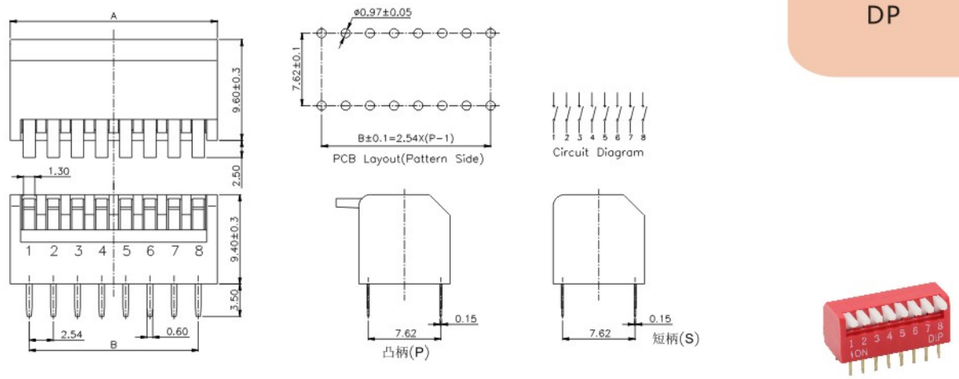

Position(位数)		1P	2P	3P	4P	5P	6P	7P	8P	9P	10P	12P
DIM.A(长度)		3.54	6.64	9.18	11.72	14.26	16.80	19.34	21.88	24.42	26.96	32.04
DIM.B(长度)		——	2.54	5.08	7.62	10.16	12.70	15.24	17.78	20.32	22.86	27.94
PART NO. 盖子/红色(R)	凸柄(P)	DP-01RP	DP-02RP	DP-03RP	DP-04RP	DP-05RP	DP-06RP	DP-07RP	DP-08RP	DP-09RP	DP-10RP	DP-12RP
	短柄(S)	DP-01RS	DP-02RS	DP-03RS	DP-04RS	DP-05RS	DP-06RS	DP-07RS	DP-08RS	DP-09RS	DP-10RS	DP-12RS
PART NO. 盖子/黑色(B)	凸柄(P)	DP-01BP	DP-02BP	DP-03BP	DP-04BP	DP-05BP	DP-06BP	DP-07BP	DP-08BP	DP-09BP	DP-10BP	DP-12BP
	短柄(S)	DP-01BS	DP-02BS	DP-03BS	DP-04BS	DP-05BS	DP-06BS	DP-07BS	DP-08BS	DP-09BS	DP-10BS	DP-12BS

DQ

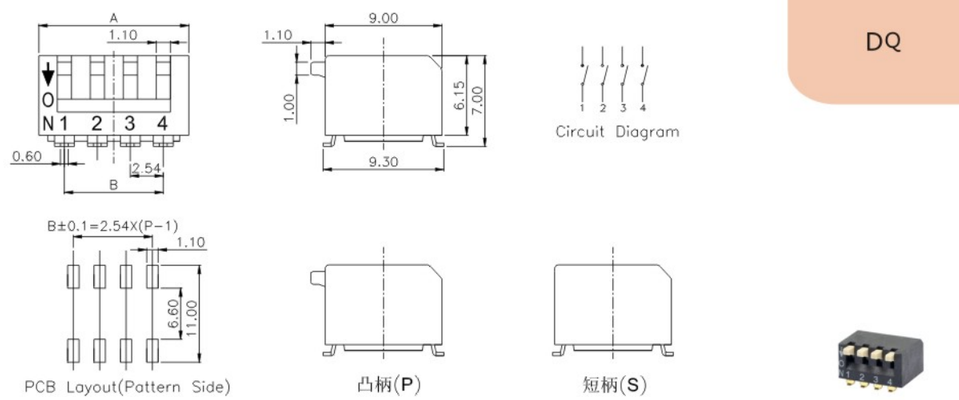

Position(位数)		2P	3P	4P	5P	6P	7P	8P	10P	12P
DIM.A(长度)		6.48	9.02	11.56	14.10	16.64	19.18	21.72	26.80	31.88
DIM.B(长度)		2.54	5.08	7.62	10.16	12.70	15.24	17.78	22.86	27.94
PART NO. 盖子/黑色(B)	凸柄(P)	DQ-02BP	DQ-03BP	DQ-04BP	DQ-05BP	DQ-06BP	DQ-07BP	DQ-08BP	DQ-10BP	DQ-12BP
	短柄(S)	DQ-02BS	DQ-03BS	DQ-04BS	DQ-05BS	DQ-06BS	DQ-07BS	DQ-08BS	DQ-10BS	DQ-12BS

外型图 Dimensions

DS

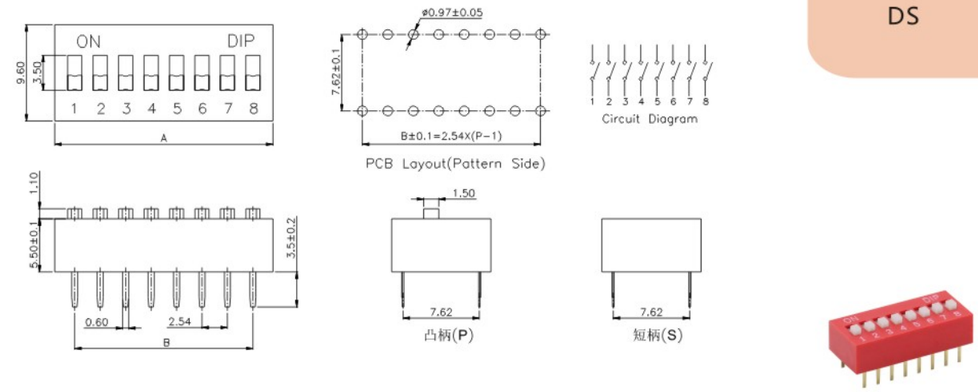

Position(位数)		1P	2P	3P	4P	5P	6P	7P	8P	9P	10P	12P
DIM.A(长度)		3.54	6.64	9.18	11.72	14.26	16.80	19.34	21.88	24.42	26.96	32.04
DIM.B(长度)		——	2.54	5.08	7.62	10.16	12.70	15.24	17.78	20.32	22.86	27.94
PART NO. 盖子/红色(R)	凸柄(P)	DS-01RP	DS-02RP	DS-03RP	DS-04RP	DS-05RP	DS-06RP	DS-07RP	DS-08RP	DS-09RP	DS-10RP	DS-12RP
	短柄(S)	DS-01RS	DS-02RS	DS-03RS	DS-04RS	DS-05RS	DS-06RS	DS-07RS	DS-08RS	DS-09RS	DS-10RS	DS-12RS
PART NO. 盖子/黑色(B)	凸柄(P)	DS-01BP	DS-02BP	DS-03BP	DS-04BP	DS-05BP	DS-06BP	DS-07BP	DS-08BP	DS-09BP	DS-10BP	DS-12BP
	短柄(S)	DS-01BS	DS-02BS	DS-03BS	DS-04BS	DS-05BS	DS-06BS	DS-07BS	DS-08BS	DS-09BS	DS-10BS	DS-12BS

EM

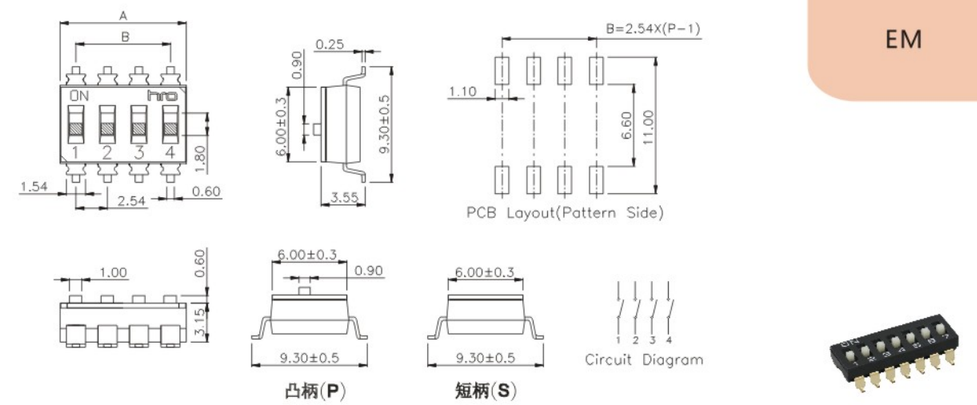

Position(位数)		1P	2P	3P	4P	5P	6P	8P
DIM.A(长度)		2.54	5.08	7.62	10.16	12.70	15.24	20.32
DIM.B(长度)		——	2.54	5.08	7.62	10.16	12.70	17.78
PART NO. 盖子/黑色(K)	凸柄(P)	EM-01KP	EM-02KP	EM-03KP	EM-04KP	EM-05KP	EM-06KP	EM-08KP
	短柄(S)	EM-01KS	EM-02KS	EM-03KS	EM-04KS	EM-05KS	EM-06KS	EM-08KS

EP

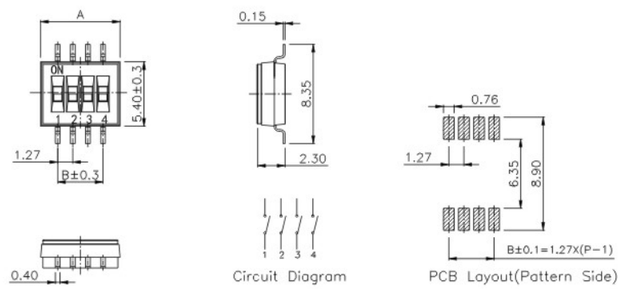

Position(位数)		2P	3P	4P	5P	6P	8P	10P
DIM.A(长度)		4.14	5.41	6.68	7.95	9.20	11.74	14.28
DIM.B(长度)		1.27	2.54	3.81	5.08	6.35	8.89	11.43
PART NO. 盖子/黑色(K)	短柄(S)	EP-02KS	EP-03KS	EP-04KS	EP-05KS	EP-06KS	EP-08KS	EP-10KS

ES

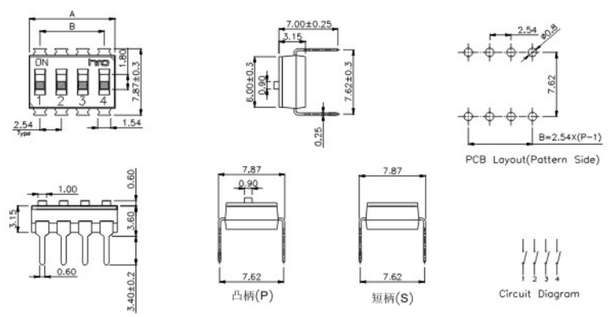

Position(位数)		1P	2P	3P	4P	5P	6P	8P
DIM.A(长度)		2.54	5.08	7.62	10.16	12.70	15.24	20.32
DIM.B(长度)		———	2.54	5.08	7.62	10.16	12.70	17.78
PART NO. 盖子/黑色(K)	凸柄(P)	ES-01KP	ES-02KP	ES-03KP	ES-04KP	ES-05KP	ES-06KP	ES-08KP
	短柄(S)	ES-01KS	ES-02KS	ES-03KS	ES-04KS	ES-05KS	ES-06KS	ES-08KS

EU

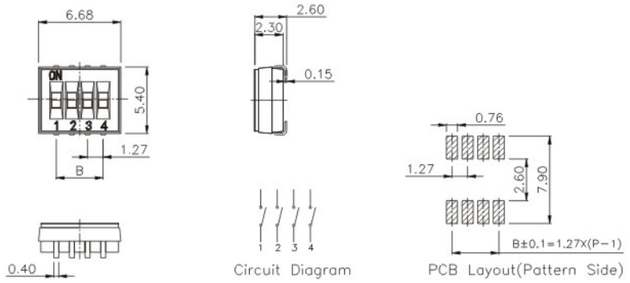

Position(位数)		2P	3P	4P	5P	6P	8P	10P
DIM.A(长度)		4.14	5.41	6.68	7.95	9.20	11.74	14.28
DIM.B(长度)		1.27	2.54	3.81	5.08	6.35	8.89	11.43
PART NO. 盖子/黑色(K)	短柄(S)	EU-02KS	EU-03KS	EU-04KS	EU-05KS	EU-06KS	EU-08KS	EU-10KS

微动开关 >>
Micro Switch

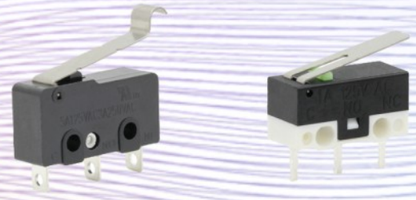

特征 Features

- 具备多种外形尺寸设计。
  Small size and light weight
- 开关声音清脆，手感、节奏感佳，灵敏度高。
  It has life and more operating forces can be applied such as lightly force
- 产品锁芯机构具备无锁和有锁不同结构设计。
  Good feeling and more leare applied
- 可依据客户要求设计不同端子脚位和不同按键高度产品。
  It can drive the contact rapidly and directly in certain travel with certain action force in order to switch over the circuit

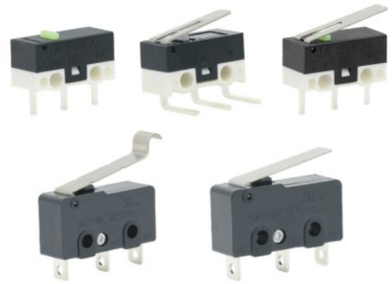

规格参数 Basic specfication parameter

电气特性 Electrical Characteristics	额定负荷 Rating	见具体产品规格 See detail spec
	接触阻抗 Contact Resistance	≤100mΩ
	绝缘阻抗 Insulation Resistance	≥100mΩ DC500V
	绝缘耐电压 Withstand voltage	AC1000V 1Minute
	电气寿命 Electrical Life	10,000Cycles above(Load)
机械/可靠性特性 Mechanical/reliability Characteristics	操作力 Operating force range	见具体产品规格 See detail spec
	机械寿命 Mechanical Life	1000000Cycles(NO Load)
	使用温度 Operating temperature range	−25°C+80°C
	使用湿度 Ambient humidity used	≤85%RH
	可焊性 Solder ability	245°C ± 5°C 3S ± 0.5S
	耐焊接热 Withstand Soldering temperature	260°C ± 5°C 3S ± 1S

焊接条件 Welding conditions

- 手工焊 Hand soldering
  使用30瓦烙铁，烙铁尖端温度不超过350°C，焊接时间3S(MAX)。
  Use a soldering iron of 30 watts, Controlled at 350°C approximately 3 seconds while solder applying
- 波峰焊 Wave soldering
  峰值温度不超过260℃，焊接时间不超过5S（焊接温度曲线参考如下）。
  The peak temperature of the wave oven should be set to 260°C max.Condition for soldering Temperature Profile

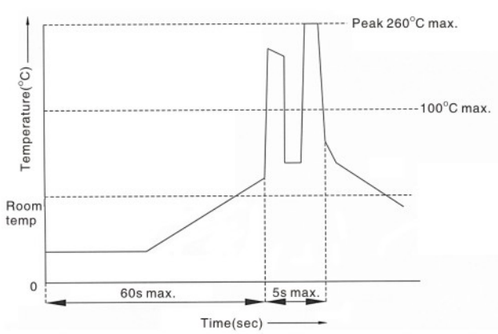

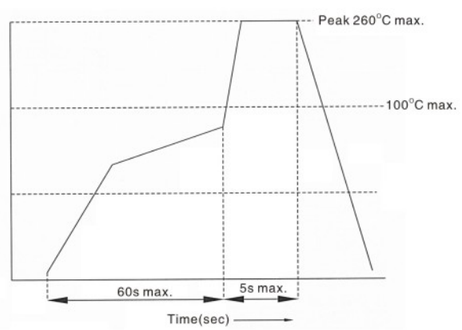

外型图 Dimensions

K9-1267B

Rating:	DC 30V 0.1A
OP:	8.8±0.8
Opercting force:	30±15gf
Lifetime:	3,000,000Cycles

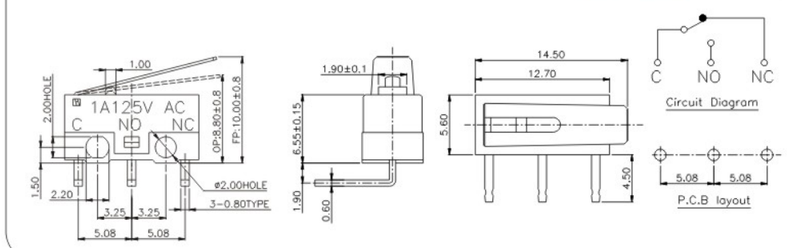

K9-1267C

Rating:	DC 30V 0.1A
OP:	7.1±0.2
Operating froce:	60±30gf
Lifetime:	1,000,000Cycles

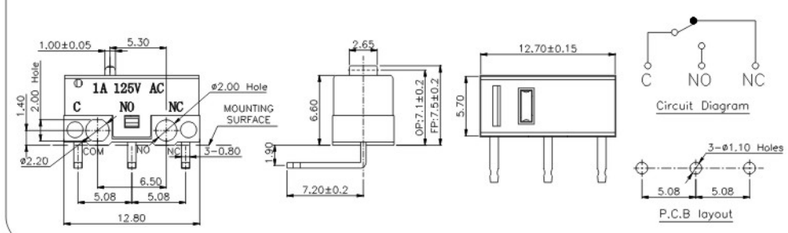

K9-1267F

Rating:	DC 30V 0.1A
OP:	10.2±0.8
Operating froce:	30±15gf
Lifetime:	3,000,000Cycles

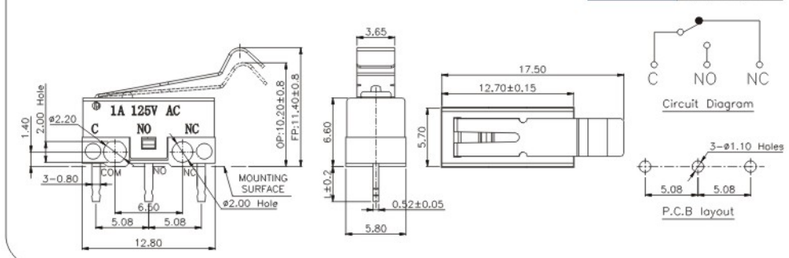

K9-1267G

Rating:	DC30V 0.1A
OP:	9.50±0.8
Operating froce:	30±15gf
Lifetime:	3,000,000Cycles

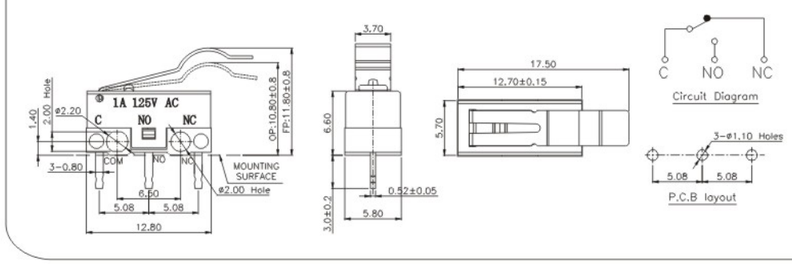

K9-1267H

Rating:	DC 30V0.1A
OP:	8.2±0.8
Operating froce:	30±15
Lifetime:	3,000,000Cycles

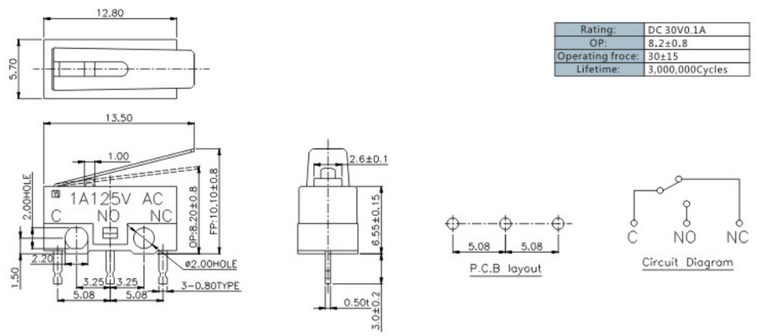

K9-1267L

Rating:	DC30V 0.1A
OP:	8.70±0.8
Operating froce:	30±15gf
Lifetime:	3,000,000Cycles

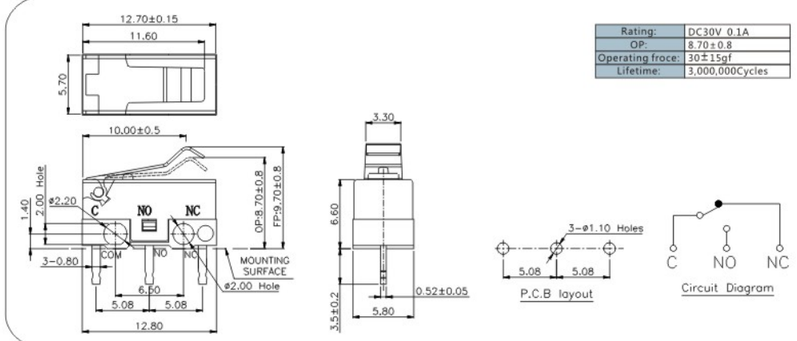

K9-1267P

Rating:	DC30V 0.1A
OP:	12.8±0.8
Operating froce:	30±15gf
Lifetime:	3,000,000Cycles

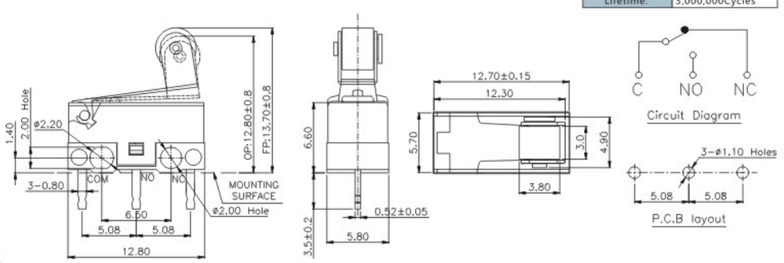

K9-1267Q

Rating:	DC30V 0.1A
OP:	8.20±0.8
Operating froce:	30±15gf
Lifetime:	3,000,000Cycles

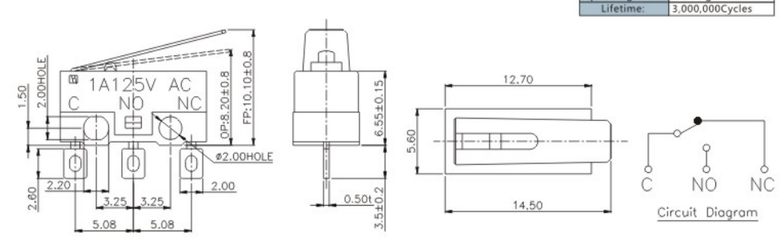

外型图 Dimensions

K9-1267T

Rating:	DC30V 0.1A
OP:	7.1±0.15
Operating froce:	80±15gf
Lifetime:	3,000,000Cycles

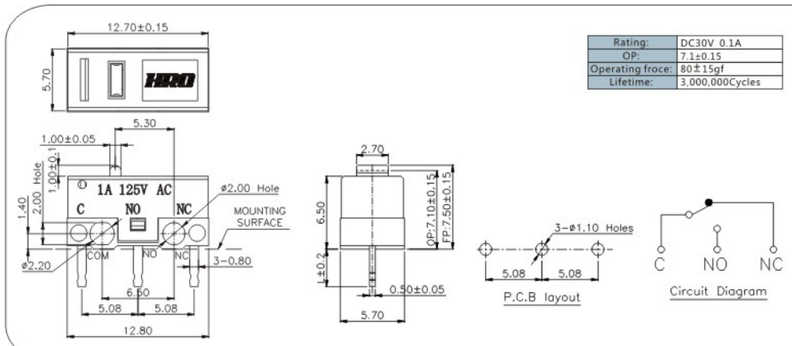

K9-1268

Rating:	DC 12V 0.1A
OP:	10±4°
Operctiing force:	200gf Max
Lifetime:	200,000Cycles

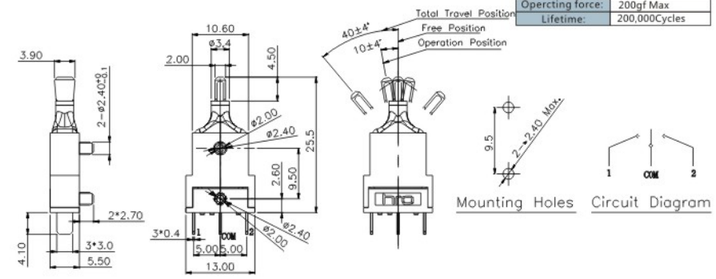

K9-1804

Rating:	DC 12V 0.1A
Operating froce:	150gf Max
Lifetime:	10,000Cycles

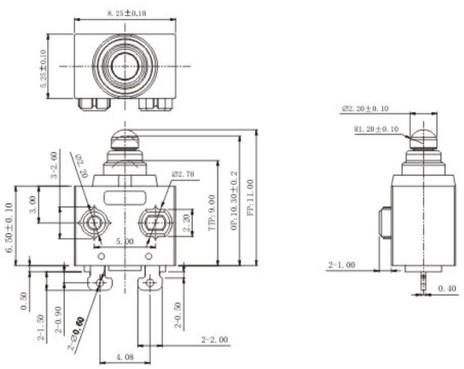

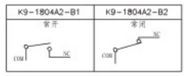

编码	图示	定位类型
N		无定位柱
R		右侧定位柱(右圆)
L		左侧定位柱(右圆)
A		右侧定位柱(左圆)
B		左侧定位柱(左圆)
C		右侧定位柱(双圆)
D		左侧定位柱(双圆)

编码	端子类型	编码	端子类型
A		E	
B		F	
P		W	
R		X	
L		Y	

K9-1910A

Rating:	AC125V 5A/250V 3A
OP:	14.5±0.8
Operating froce:	30±15gf
Lifetime:	1,000,000Cycles

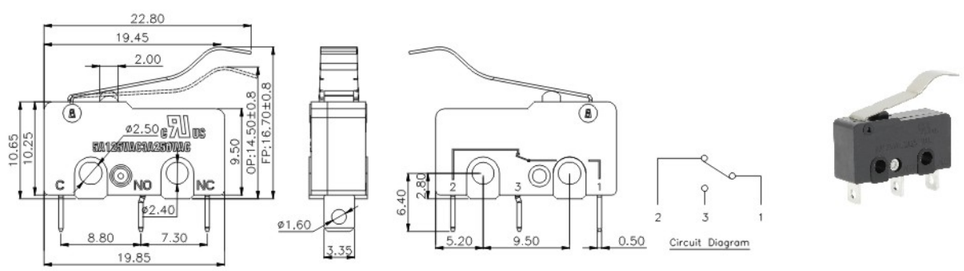

K9-1910B

Rating:	AC125V 5A/250V 3A
OP:	11.4±0.3
Operating froce:	100±30gf
Lifetime:	1,000,000Cycles
Electrical life:	6,000-10,000Cycles

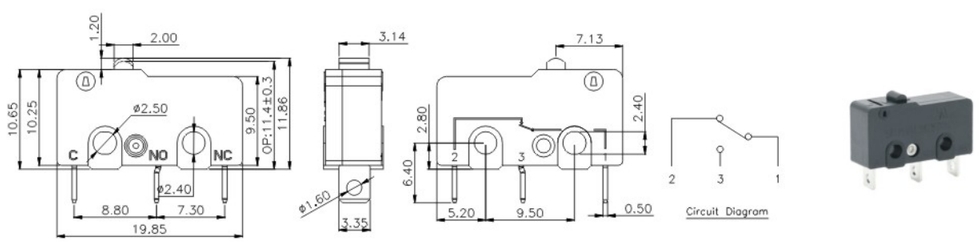

K9-1910C

Rating:	AC125V 5A/250V 3A
OP:	12.3±0.5
Operating froce:	30±10gf
Lifetime:	1,000,000Cycles
Electrical life:	6,000-10,000Cycles

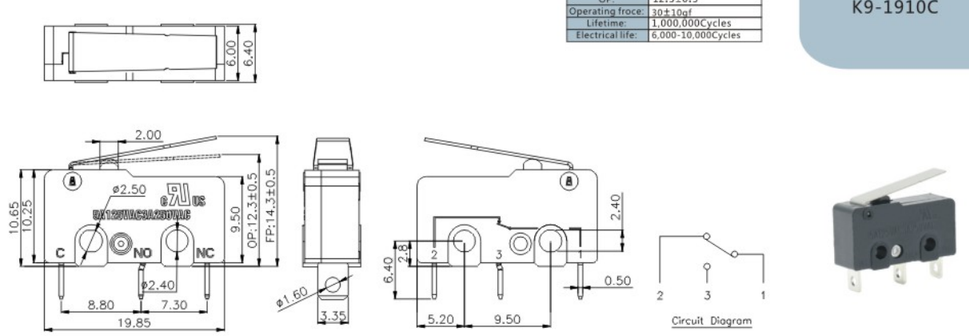

外型图 Dimensions

K9-1910D

Rating:	AC125V 5A/250V 3A
OP:	15.8±0.5
Operating froce:	25±10gf
Lifetime:	1,000,000Cycles
Electrical life:	6,000-10,000Cycles

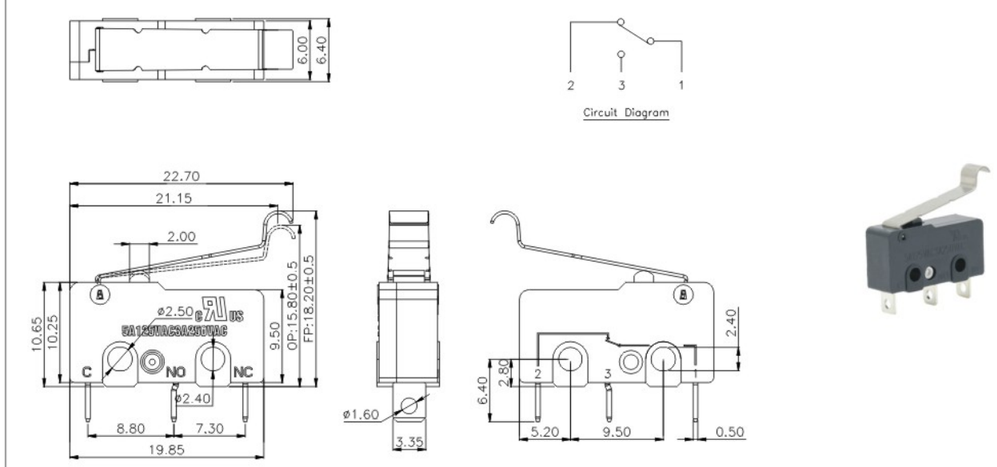

K9-1910F

Rating:	AC125V 5A/250V 3A
OP:	18.0±0.5
Operating froce:	30±10gf
Lifetime:	1,000,000Cycles
Electrical life:	6,000-10,000Cycles

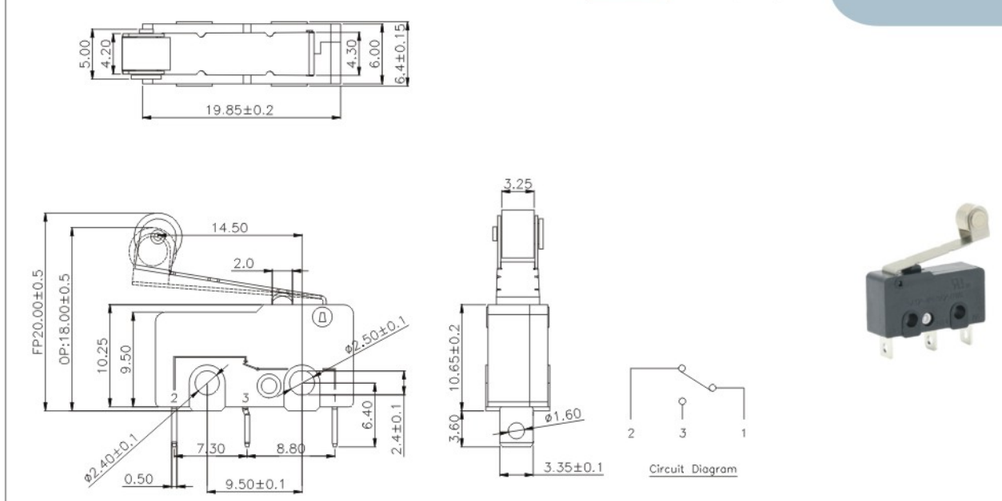

K9-2811

Rating1:	DC 12V 3A
Rating2:	48VDC/125VAC/250VAC/ 0.1A
Opercting force:	75±30gf&130±30gf
Mechanical Life:	500,000Cycles

IP67

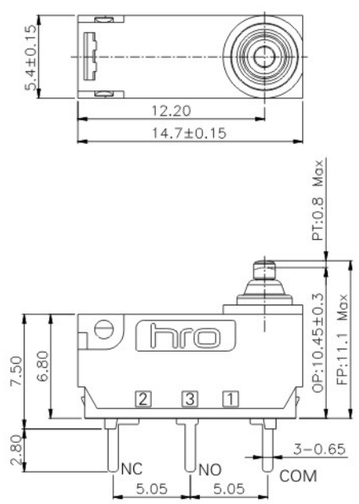

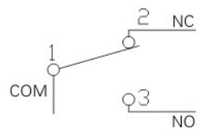

Circuit Diagram

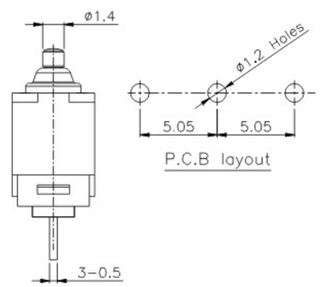

P.C.B layout

端子类型 / 定位柱类型	S型	H型	B型	P型	K型	M型	L型	R型	T型	其他/Other
										其他/Other
N										
R										
L										
D										
备注：定位柱长度"L"通常为1.5MM、2.0MM、2.5MM、3.0MM、3.5MM、5.0MM,也可根据客户需求定制长度										

端子类型 / 触点类型	W	X	Y
D 常开/常闭			
B 常开			
C 常闭			

手柄类型

手柄					
插入式	01	02	03	05	06
	07	08	09	22	23
外扣式	26	28	27	19	

外型图 Dimensions

K9-2821

Rating1:	DC 12V 3A
Rating2:	48VDC/125VAC/250VAC/ 0.1A
Opercting force:	75±30gf&130±30gf
Mechanical Life:	500,000Cycles

IP67

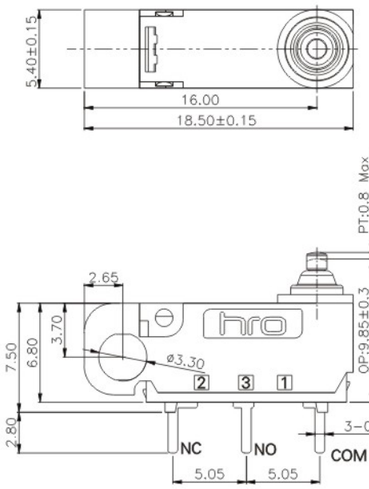

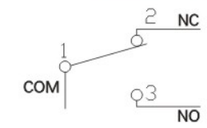

Circuit Diagram

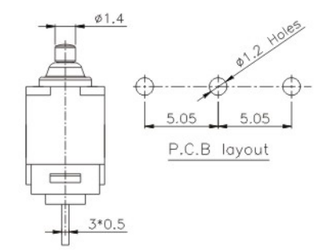

P.C.B layout

端子类型 / 定位柱类型	S型	H型	B型	P型	K型	M型	L型	R型	T型	其他/Other
										其他/Other
N										
R										
L										
D										
备注：定位柱长度"L"通常为1.5MM、2.0MM、2.5MM、3.0MM、3.5MM、5.0MM,也可根据客户需求定制长度										

端子类型 / 触点类型	W	X	Y
D 常开/常闭			
B 常开			
C 常闭			

手柄类型

手柄					
插入式	01	02	03	05	06
	07	08	09	22	23
外扣式	26	28	27	19	

K9-2831

Rating1:	DC 12V 3A
Rating2:	48VDC/125VAC/250VAC/ 0.1A
Opercting force:	75±30gf&130±30gf
Mechanical Life:	500,000Cycles

IP67

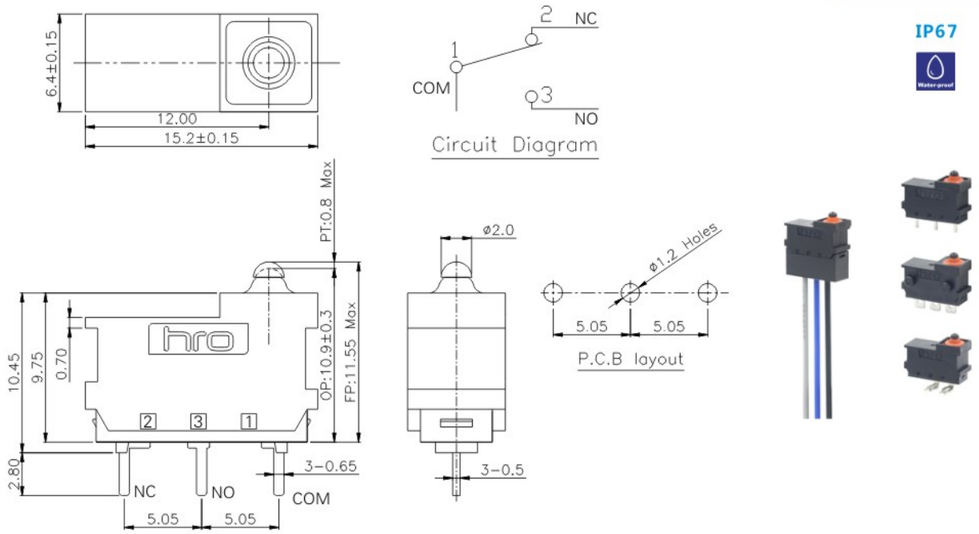

定位柱类型 \ 端子类型		S型	H型	B型	P型	K型	M型	L型	R型	T型	其他/Other
											其他/Other
N											
R											
L											
D											
	备注：定位柱长度"L"通常为1.5MM、2.0MM、2.5MM、3.0MM、3.5MM、5.0MM,也可根据客户需求定制长度										

触点类型 \ 端子类型	W	X	Y
D 常开/常闭			
B 常开			
C 常闭			

外型图 Dimensions

K9-2841

Rating1:	DC 12V 3A
Rating2:	48VDC/125VAC/250VAC/ 0.1A
Opercting force:	75±30gf&130±30gf
Mechanical Life:	500,000Cycles

IP67

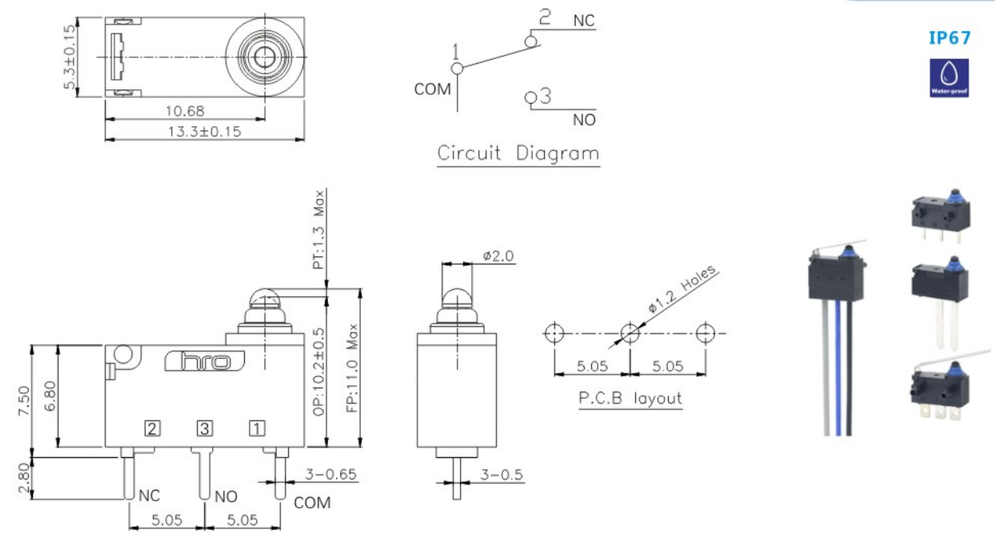

定位柱类型 \ 端子类型		S型	H型	B型	P型	K型	M型	L型	R型	T型	其他/Other
											其他/Other
N											
R											
L											
D											
	备注：定位柱长度"L"通常为1.5MM、2.0MM、2.5MM、3.0MM、3.5MM、5.0MM,也可根据客户需求定制长度										

触点类型 \ 端子类型	W	X	Y
D 常开/常闭			
B 常开			
C 常闭			

手柄类型

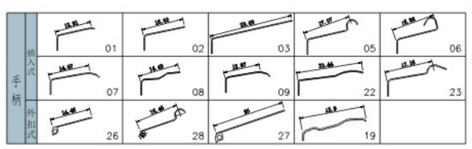

Rating1:	DC 12V 3A
Rating2:	48VDC/125VAC/250VAC/ 0.1A
Operctng force:	75±30gf&130±30gf
Mechanical Life:	500,000Cycles

K9-2851

IP67

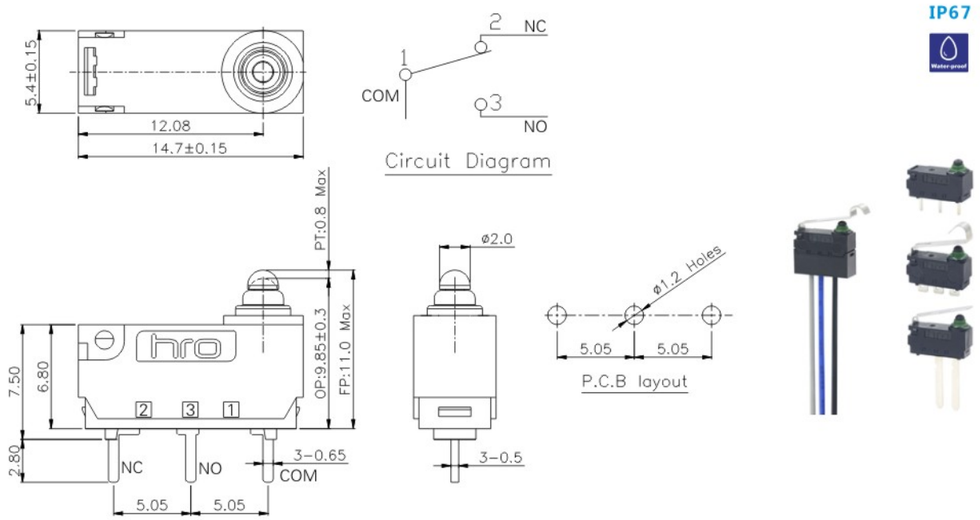

端子类型 / 定位柱类型	S型	H型	B型	P型	K型	M型	L型	R型	T型	其他/Other
N										
R										
L										
D										
	备注：定位柱长度"L"通常为1.5MM、2.0MM、2.5MM、3.0MM、3.5MM、5.0MM,也可根据客户需求定制长度									

端子类型 / 触点类型	W	X	Y
D 常开/常闭			
B 常开			
C 常闭			

手柄类型

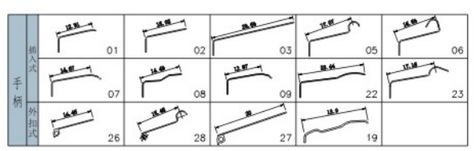

外型图 Dimensions

K9-8227D

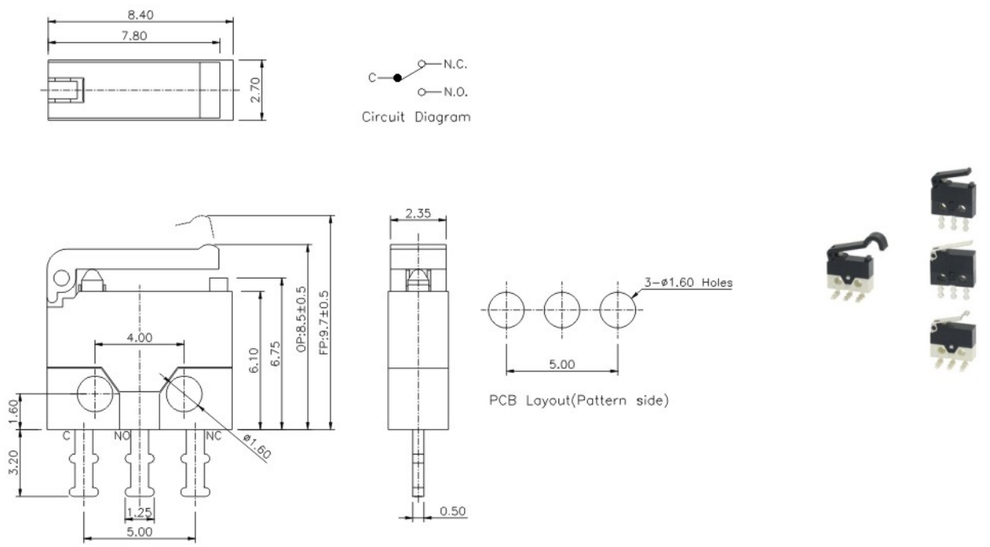

编码	端子类型
D	
L	
R	

编码	图示	定位类型
Y		有定位孔
N		无定位孔
L		左侧定位柱
R		右侧定位柱

编码	手柄类型	编码	手柄类型
N	00	D	04
A	01	E	05
B	02	F	06
C	03	G	07
H	08		

K9-8601A

Rating:	DC 6V 1mA
Operctiing force:	60gf,90gf,120gf
Lifetime	5,000,000Cycles

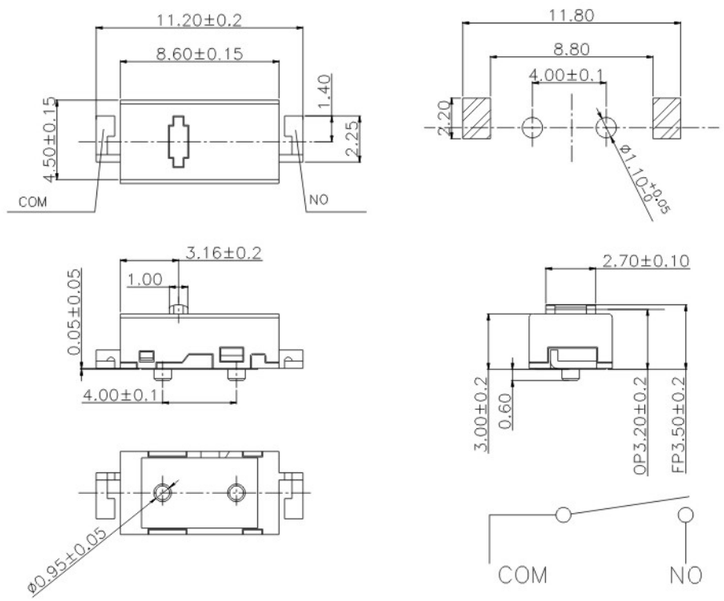

K9-8601B

Rating:	DC 6V 1mA
Operctiing force:	60gf,90gf,120gf
Lifetime	5,000,000Cycles

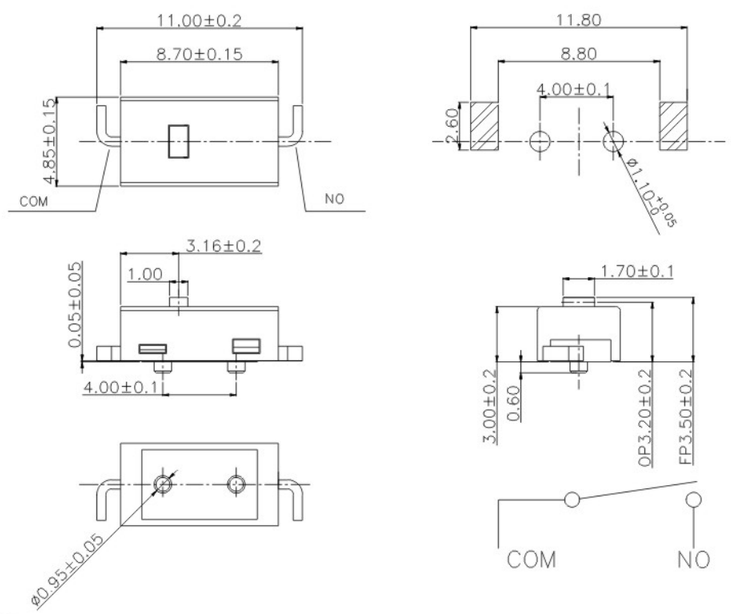

耳机插座 >>
Audio Jack

Audio Jack 耳机插座

特征 Features

- 具备AC97和HDA等不同规范结构设计。
  With AC97 andDHA etc.different design configuration
- 弹性端子采用优良的进口磷青铜材料，保证弹性部件的寿命。
  Terminal is made from eximious bronze material to assure long life
- 安装形式有DIP和SMT供选择。
  Assembly ways:DIP and SMT
- 接触端子采用弹性结构设计，保证良好的接触稳定性和长寿命要求。
  Flexibility design for terminal interface to ensure nice contact and prolong
- 可依据客户要求设计不同功能输出产品。
  Can design different connect products

规格参数 Basic specfication parameter

电气特性 Electrical Characteristics	额定负荷 Rating	DC 30V 0.5A
	接触阻抗 Contact Resistance	≤100mΩ
	绝缘阻抗 Insulation Resistance	≥100mΩ
	绝缘耐电压 Withstand voltage	AC500V(50-60HZ) 1Minute
	电气寿命 Electrical Life	5000Cycles
机械/可靠性特性 Mechanical/reliability Characteristics	操作力 Operating force range	3-20N
	机械寿命 Mechanical Life	5000Cycles
	使用温度 Operating temperature range	-25°C+80°C
	使用湿度 Ambient humidity used	≤85%RH
	可焊性 Solder ability	245°C ± 5°C 3S ± 1S
	耐焊接热 Withstand Soldering temperature	260°C ± 5°C 3S ± 1S

焊接条件 Welding conditions

- 手工焊 Hand soldering
  使用30瓦烙铁，烙铁尖端温度不超过350℃，焊接时间3S。
  Use a soldering iron of 30 watts, Controlled at 350°C approximately 3 seconds while solder applying
- 波峰焊/回流焊Wave soldering/Reflow Soldering
  峰值温度不超过260℃，焊接时间不超过5S（焊接温度曲线参考如下）。
  The peak temperature of the wave oven should be set to 260°C max.Condition for soldering Temperature Profile

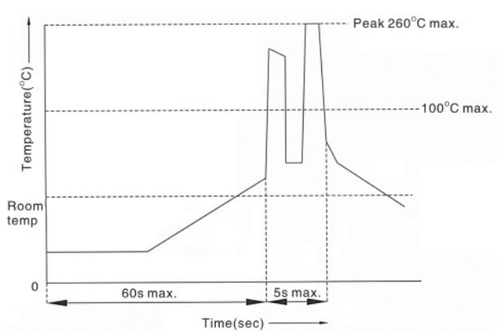

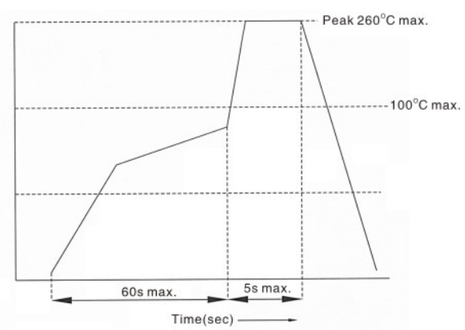

外型图 Dimensions

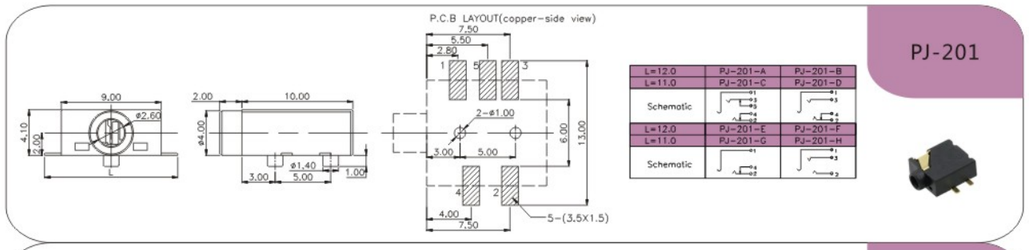

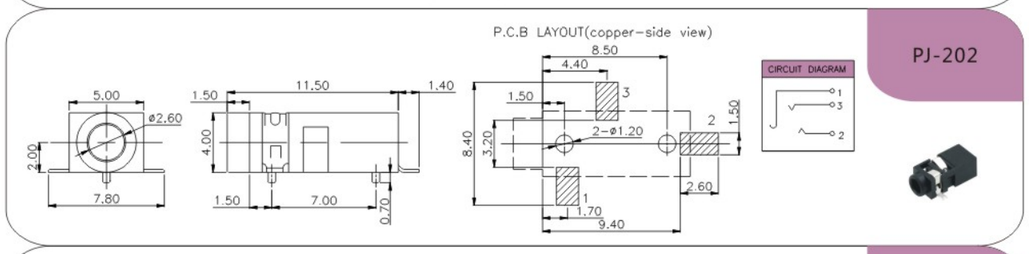

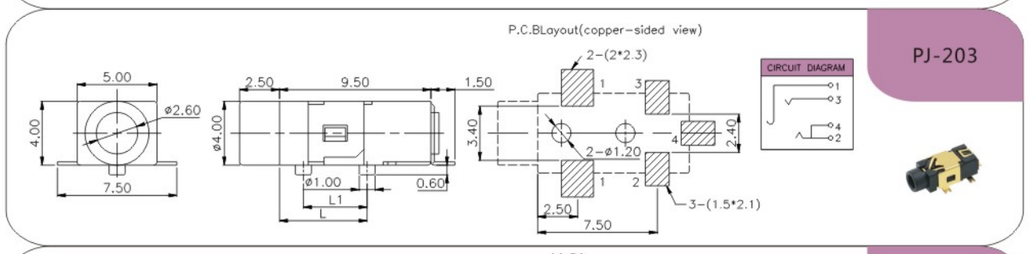

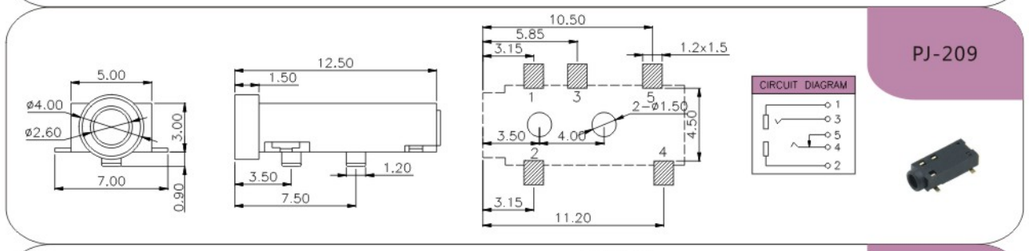

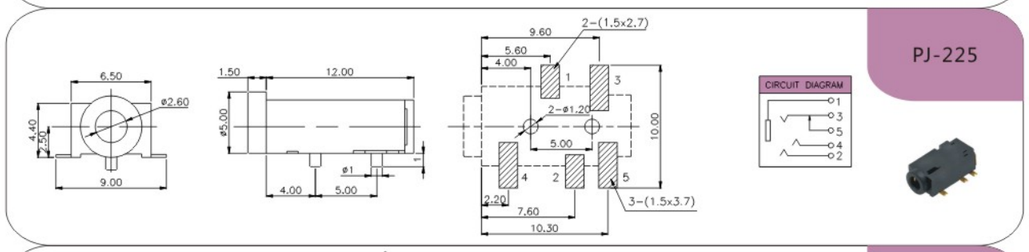

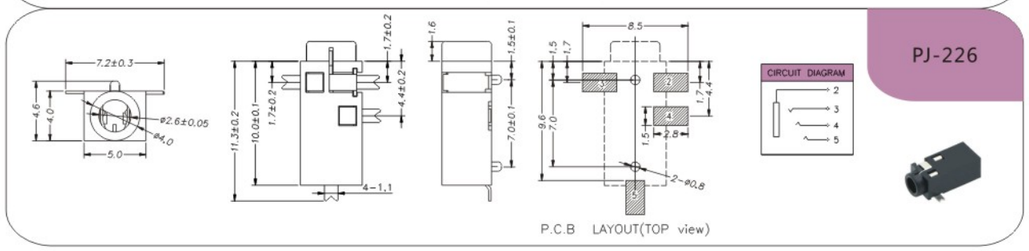

PJ-227

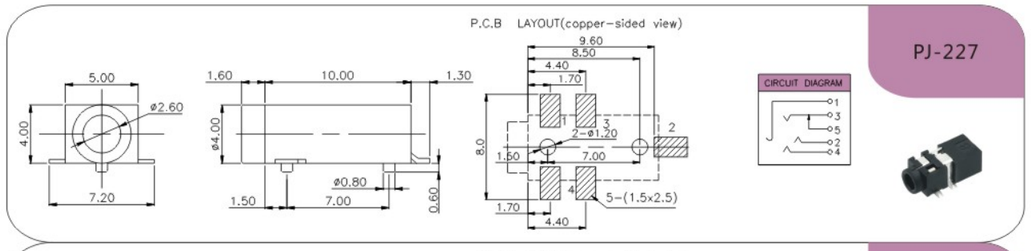

PJ-231B

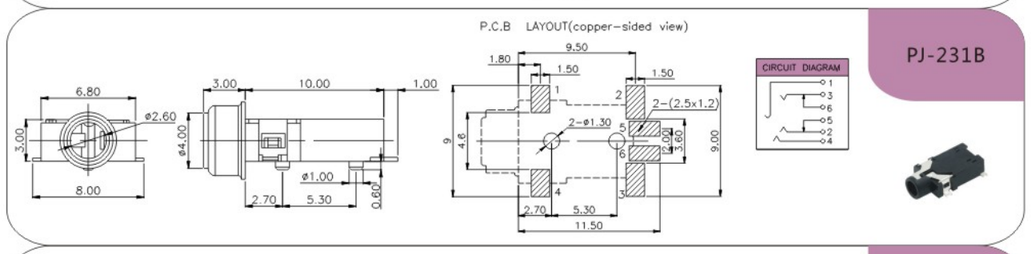

PJ-231F

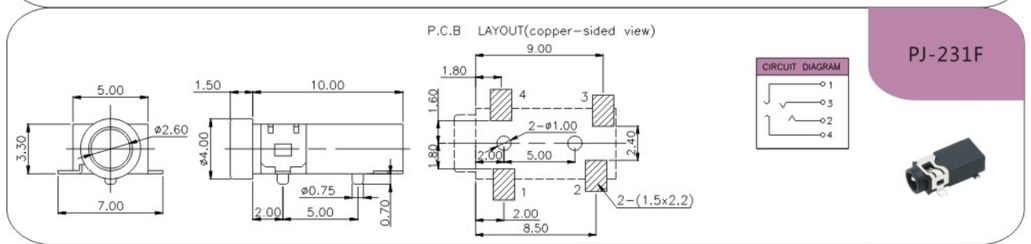

PJ-233

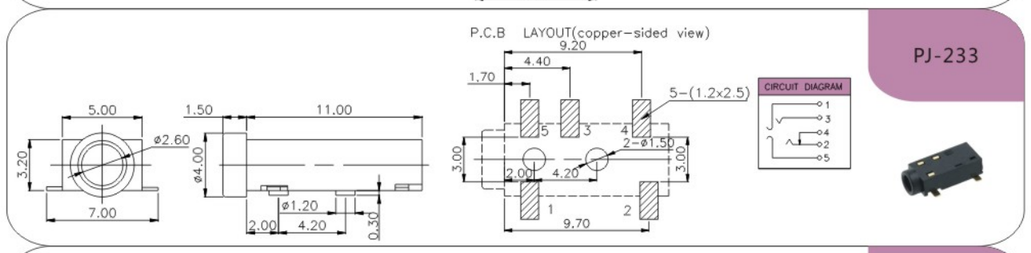

PJ-237

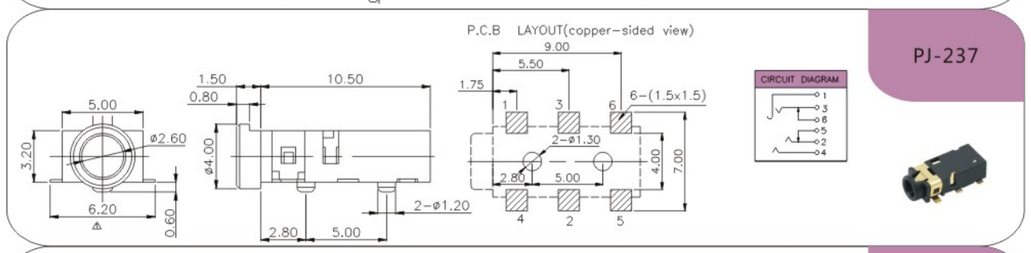

PJ-242

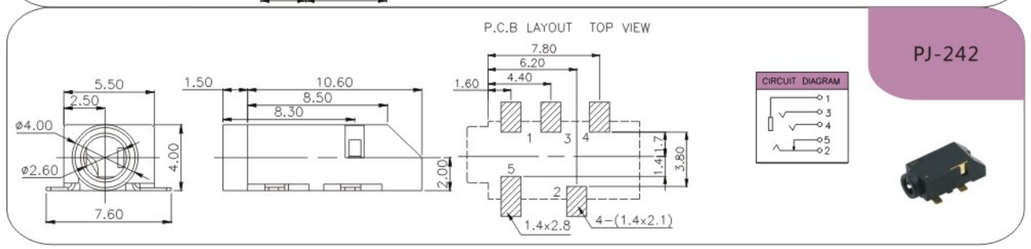

外型图 Dimensions

PJ-245

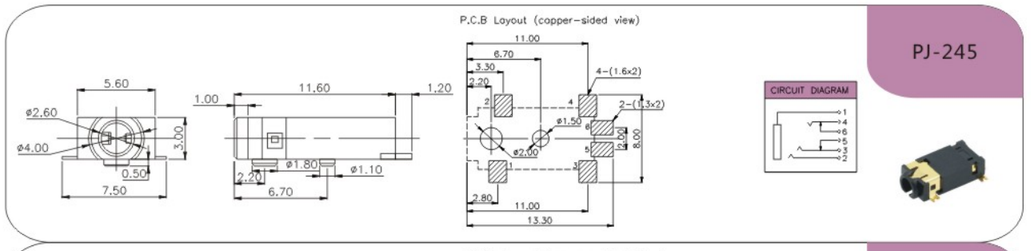

PJ-246

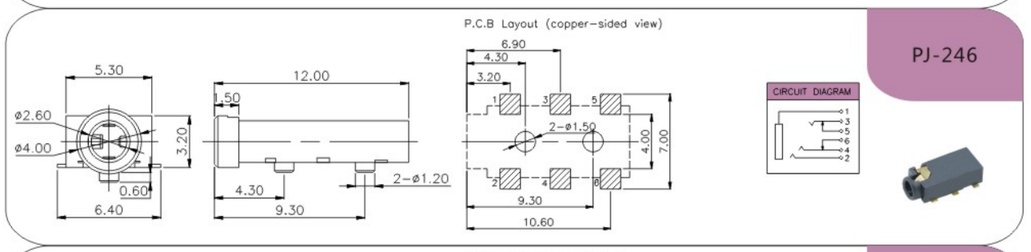

PJ-258

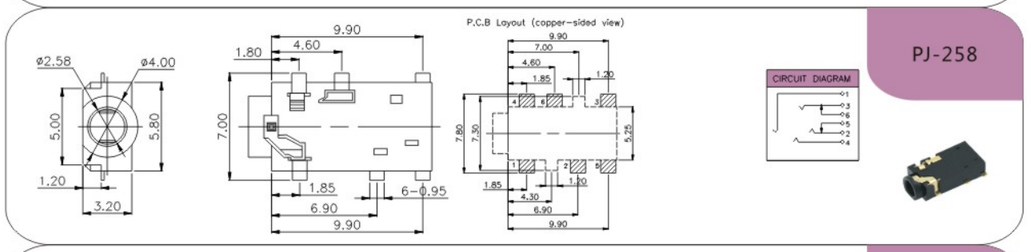

PJ-259

IP-X7

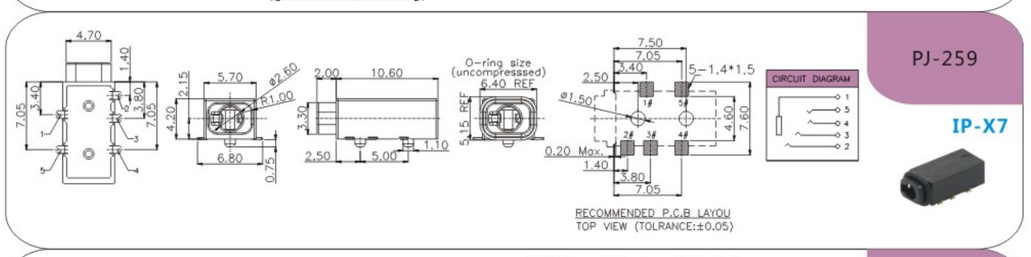

PJ-313D

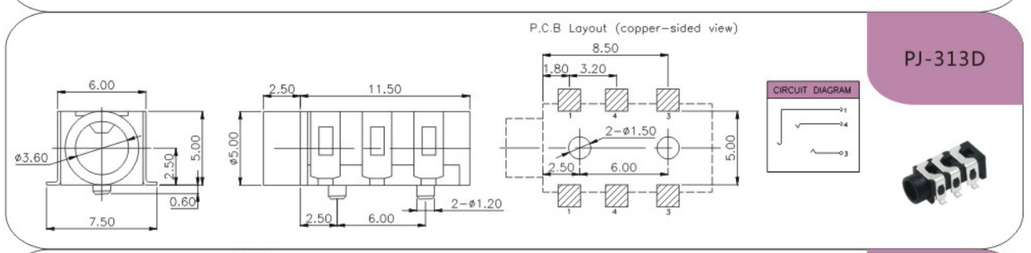

PJ-313E

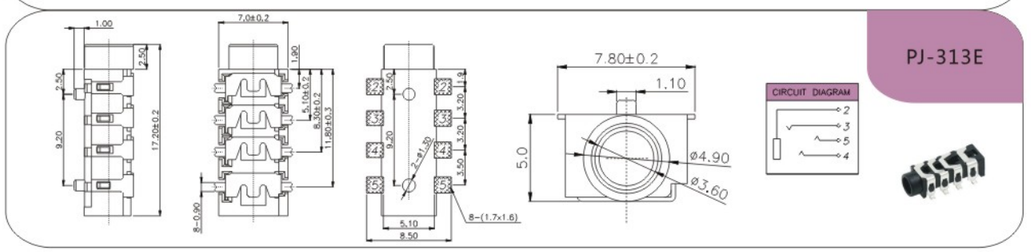

PJ-316A

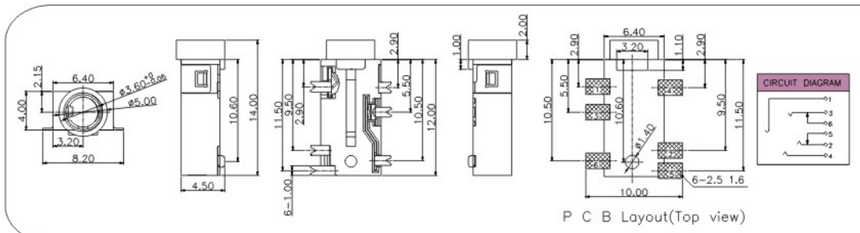

PJ-320B

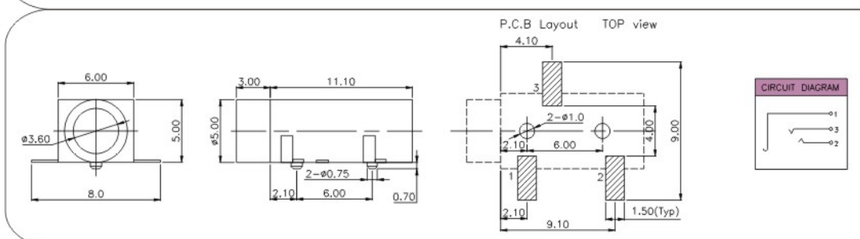

PJ-320D

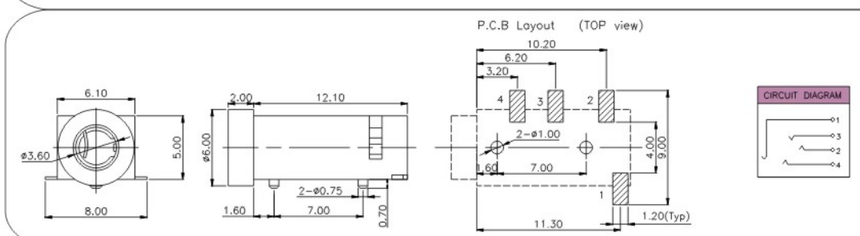

PJ-320DB

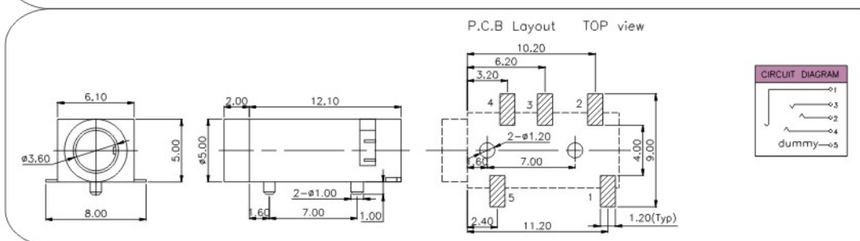

PJ-320EA

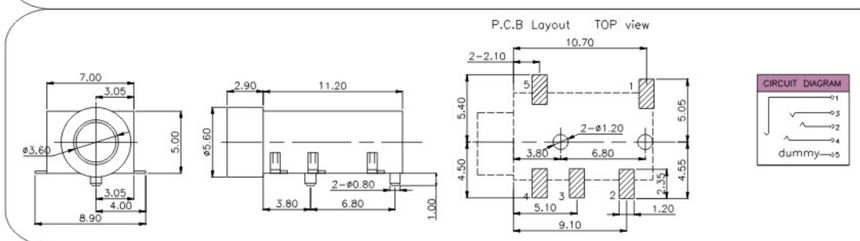

PJ-321A

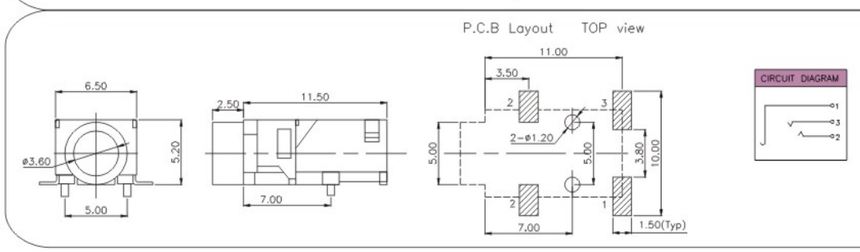

外型图 Dimensions

PJ-326

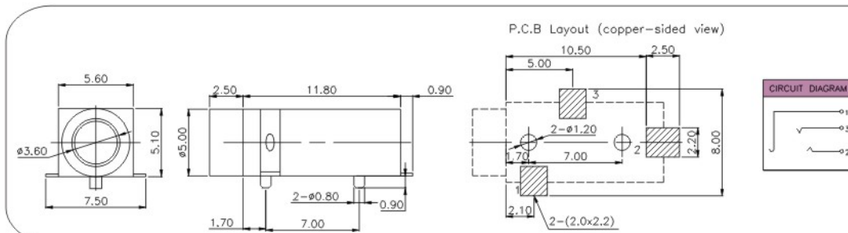

PJ-327A

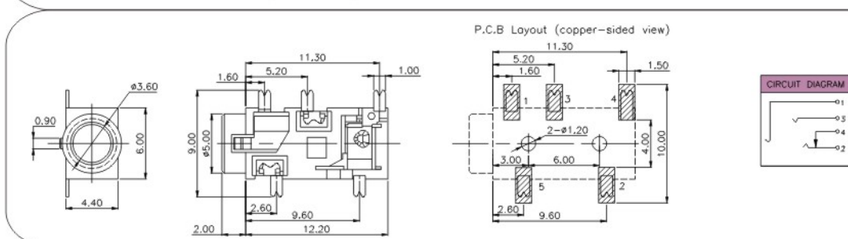

PJ-327B

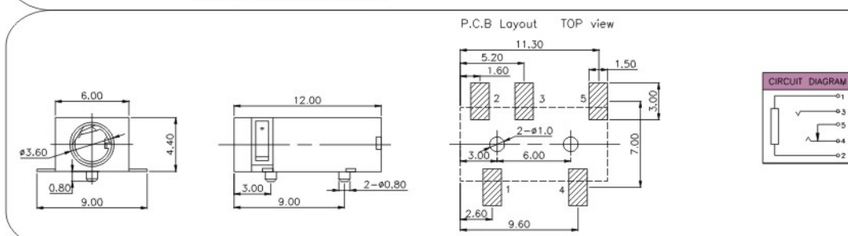

PJ-327C

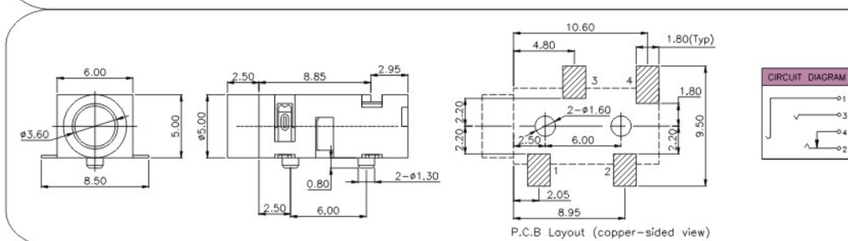

PJ-327D

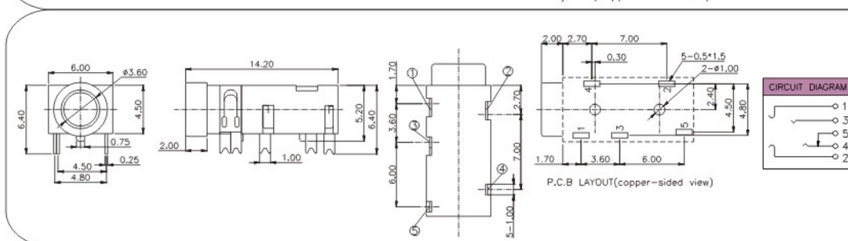

PJ-327E

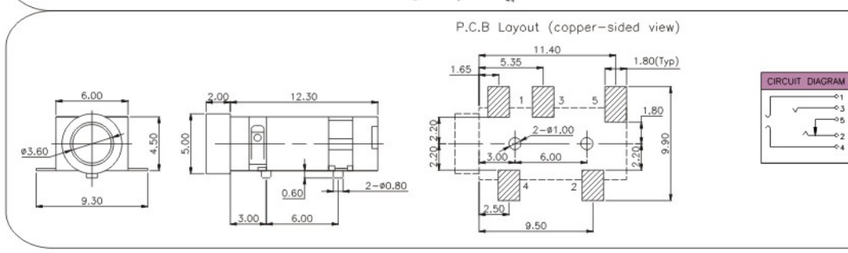

PJ-327EA

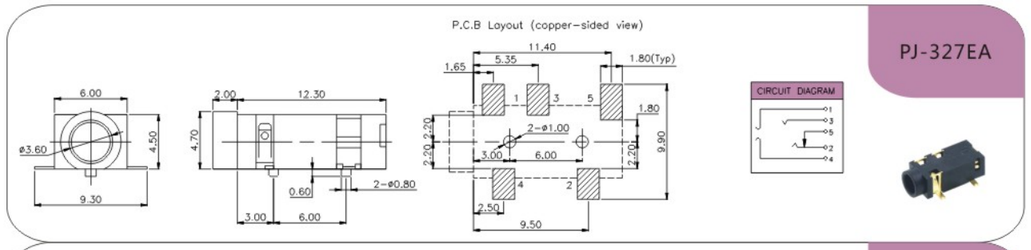

PJ-327F

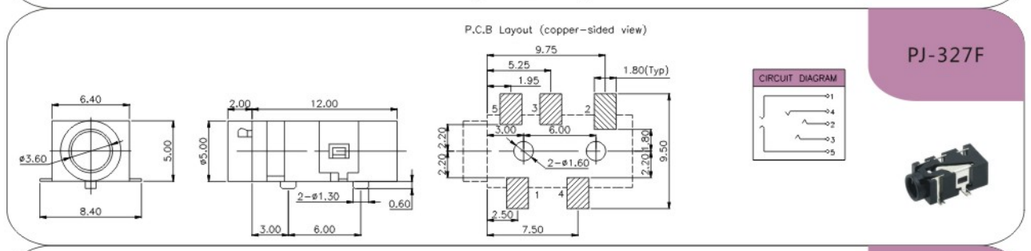

PJ-327G

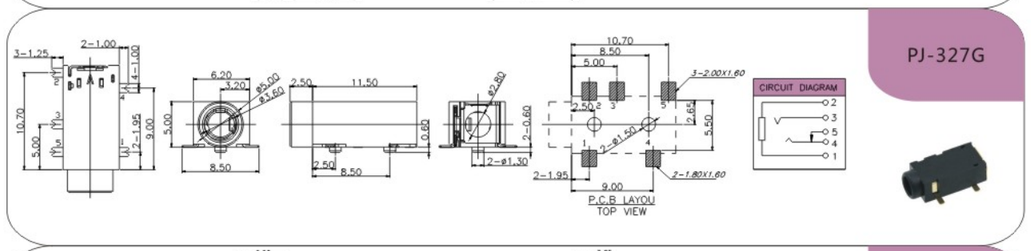

PJ-328

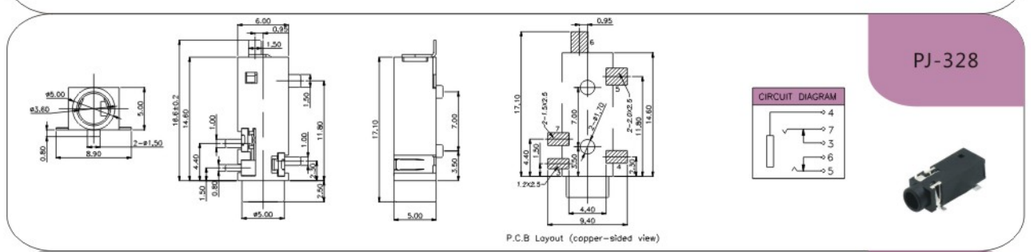

PJ-328B

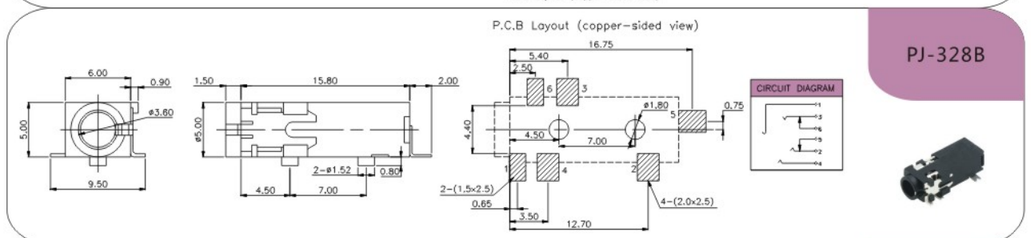

PJ-328D

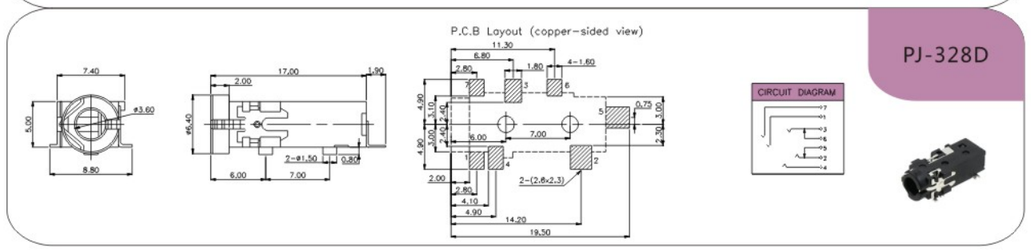

外型图 Dimensions

PJ-331

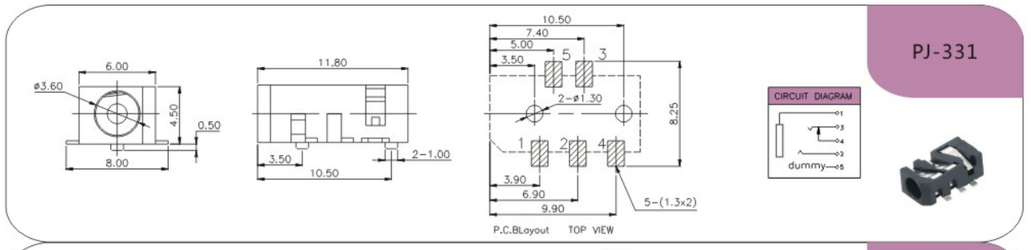

PJ-332D

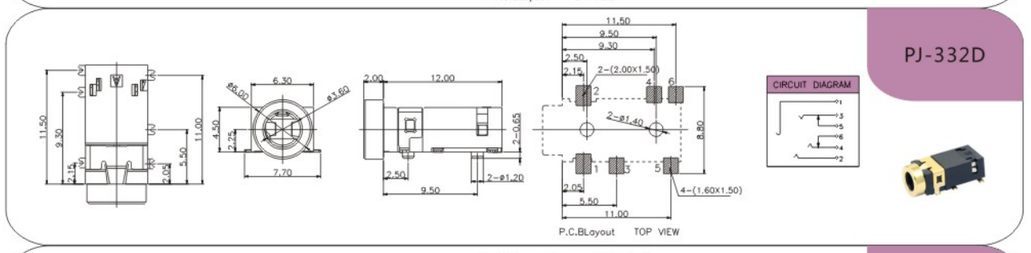

PJ-365

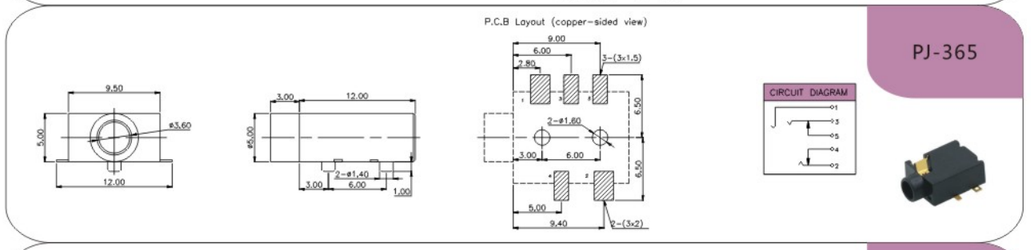

PJ-380B

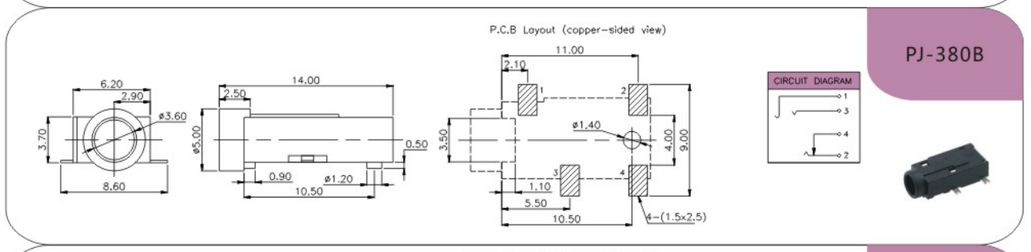

PJ-381

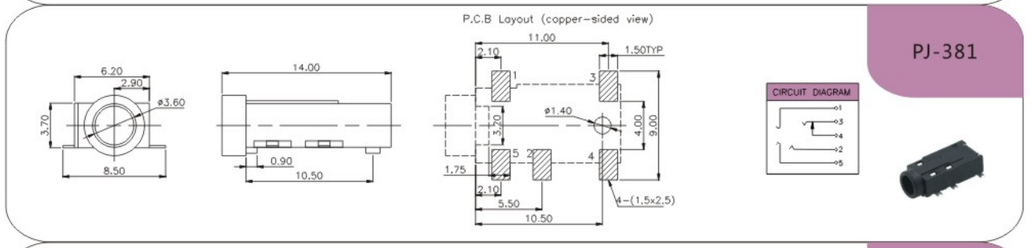

PJ-381A

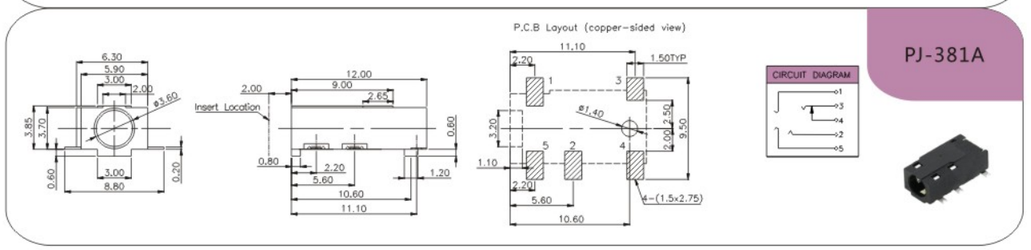

PJ-384

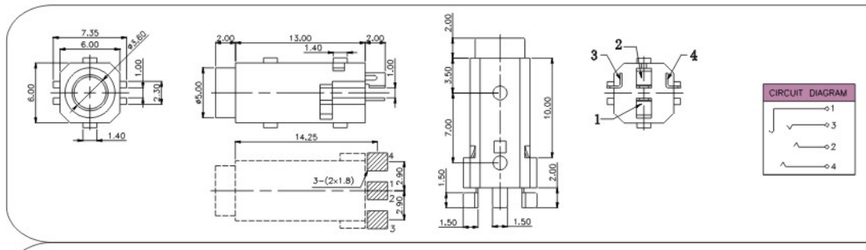

PJ-393

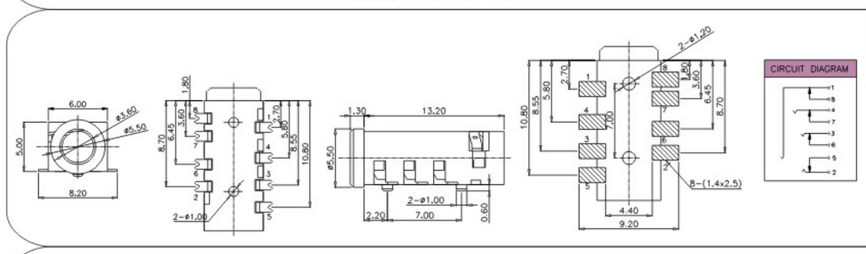

PJ-393B

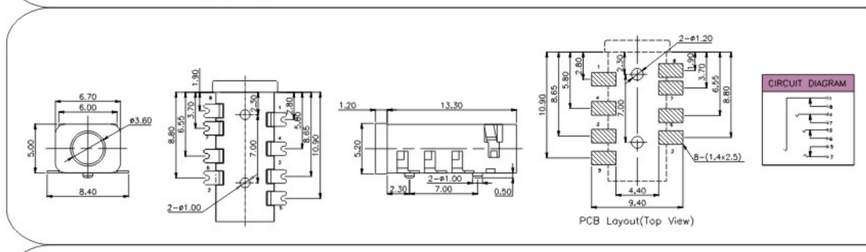

PJ-398A

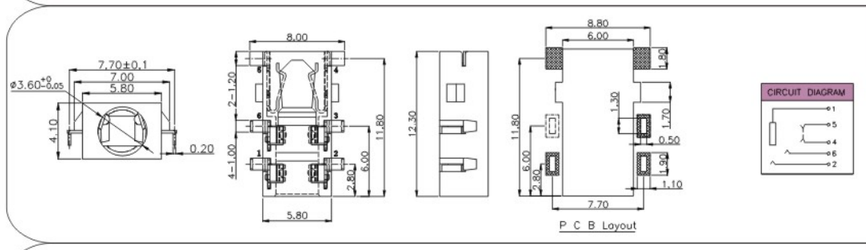

PJ-399

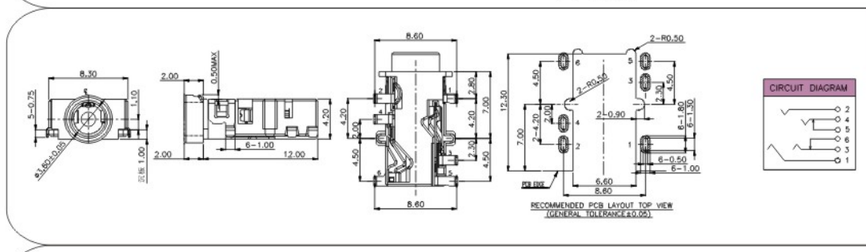

PJ-399B沉板式

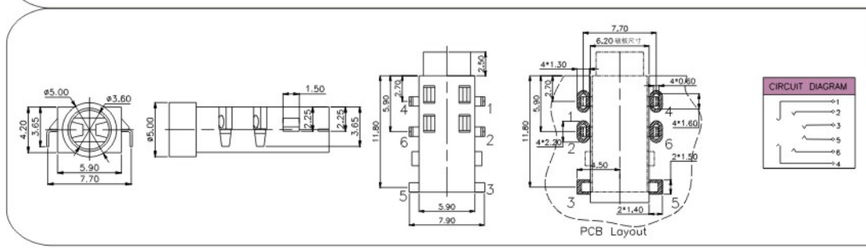

外型图 Dimensions

PJ-399E沉板式

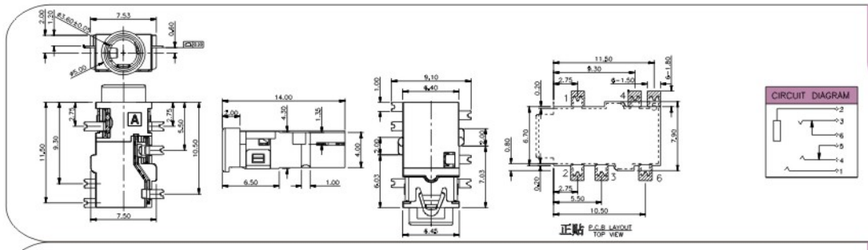

PJ-399F沉板式

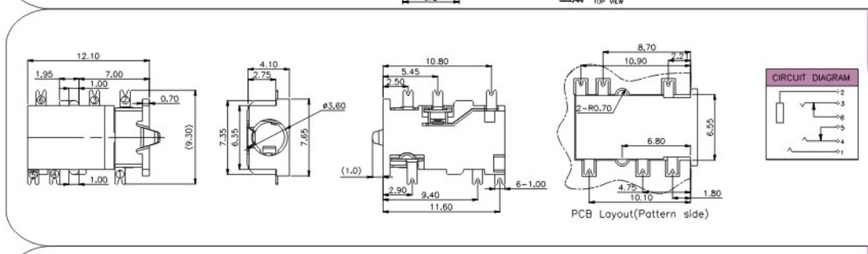

PJ-399J沉板式

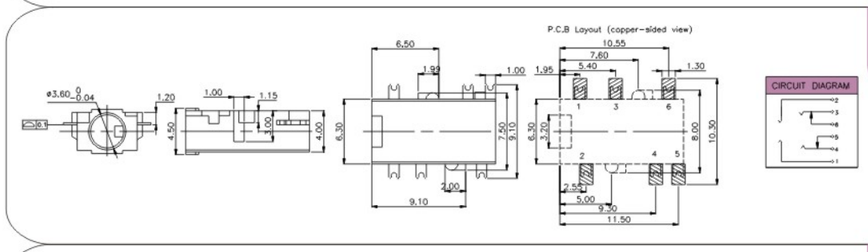

PJ-601

IP-X7

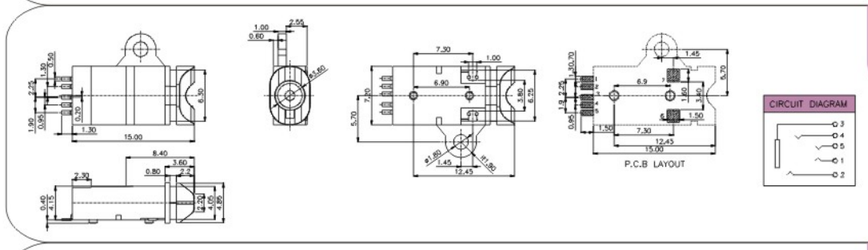

PJ-602

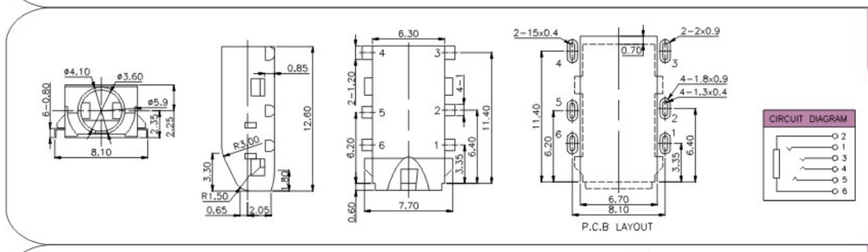

PJ-603

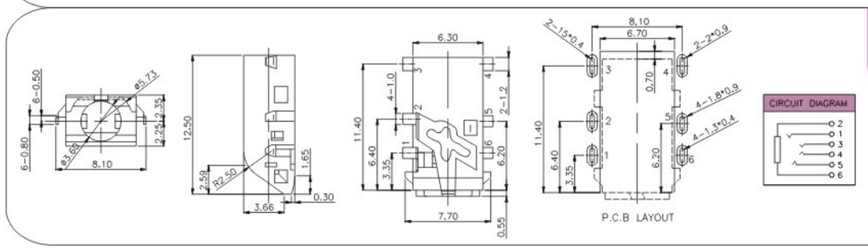

PJ-604

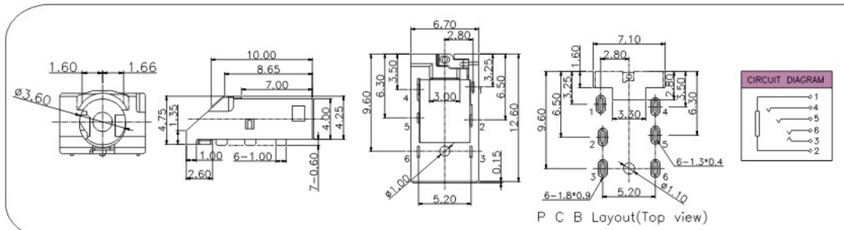

PJ-605

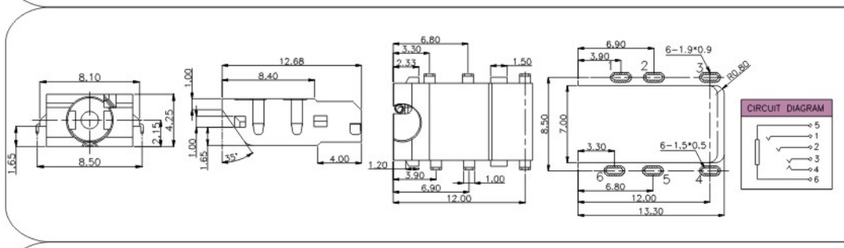

PJ-606

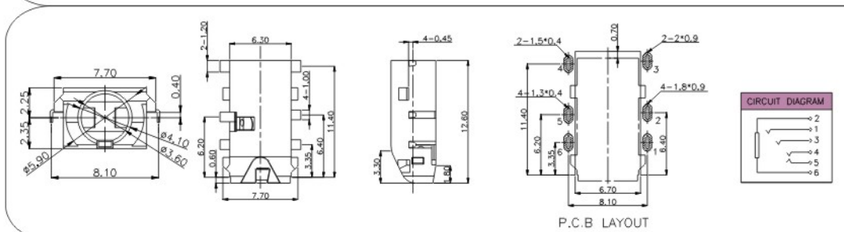

PJ-607

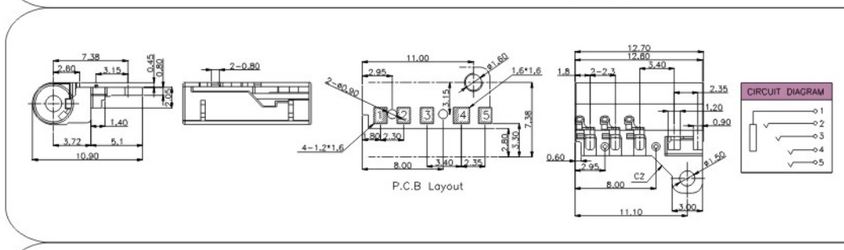

PJ-608

IP-X7

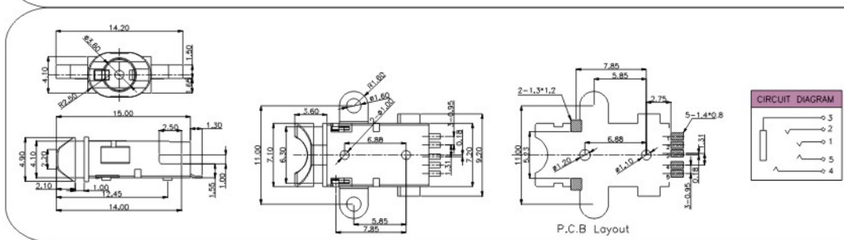

PJ-609

IP-X8

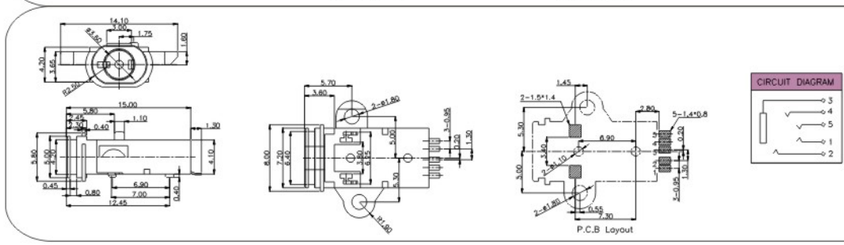

外型图 Dimensions

PJ-610

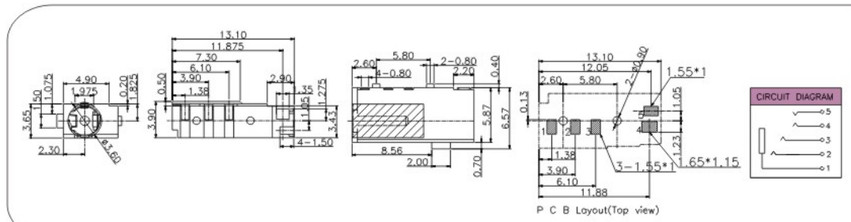

PJ-611

IP-X7

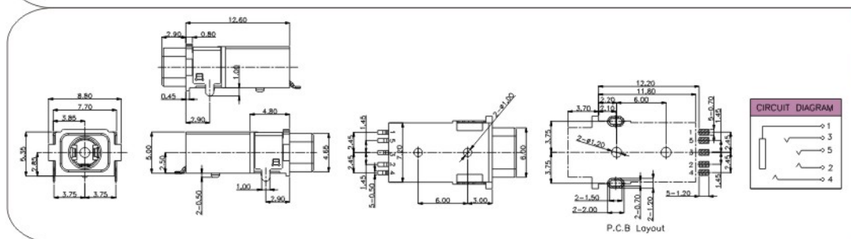

PJ-612

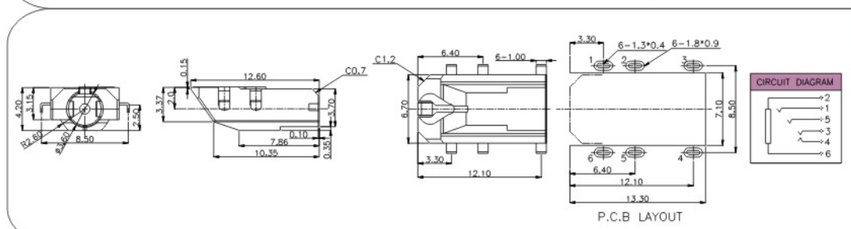

PJ-613

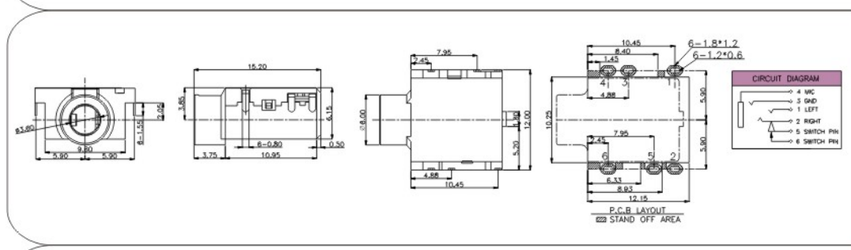

PJ-614

IP-X7

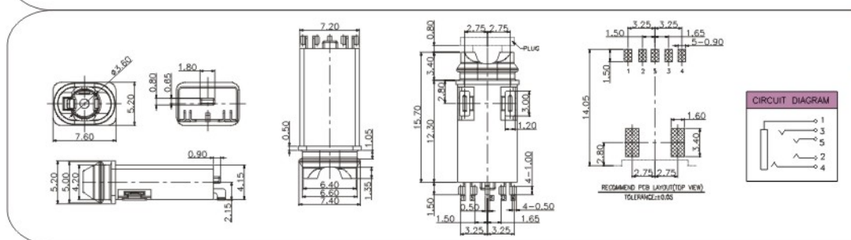

PJ-615

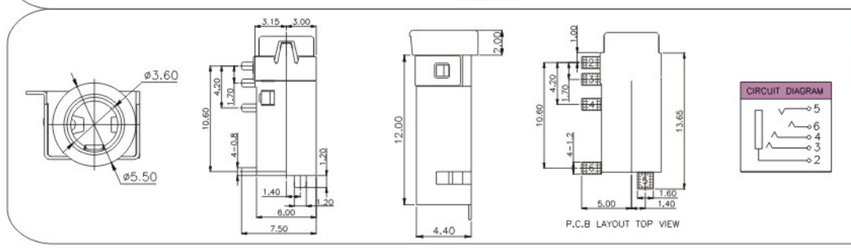

PJ-616

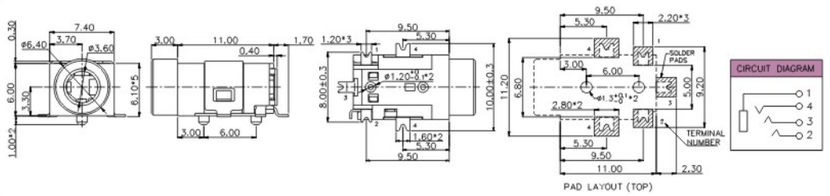

PJ-617

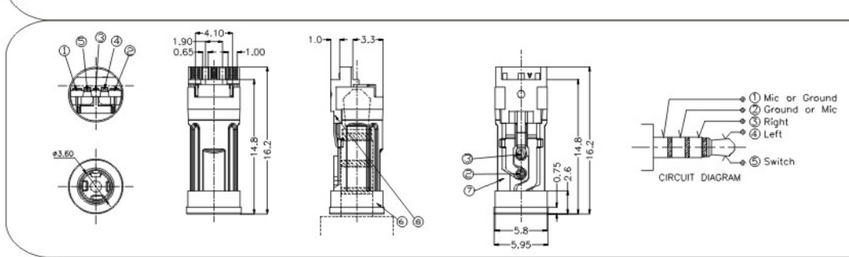

PJ-618

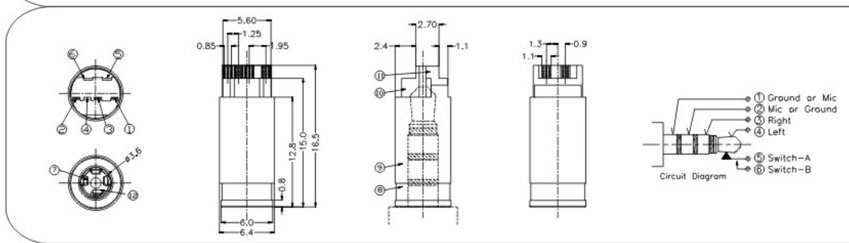

PJ-619

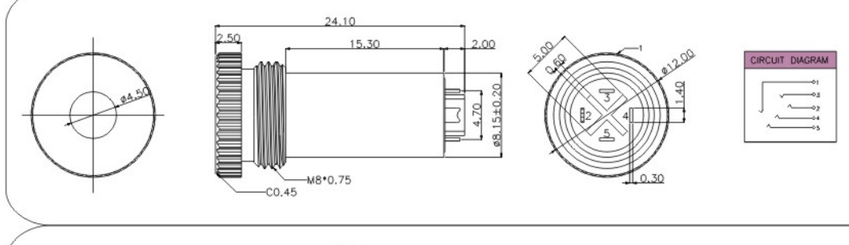

PJ-619G

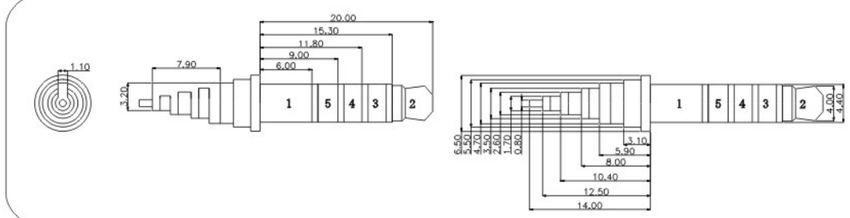

PJ-620

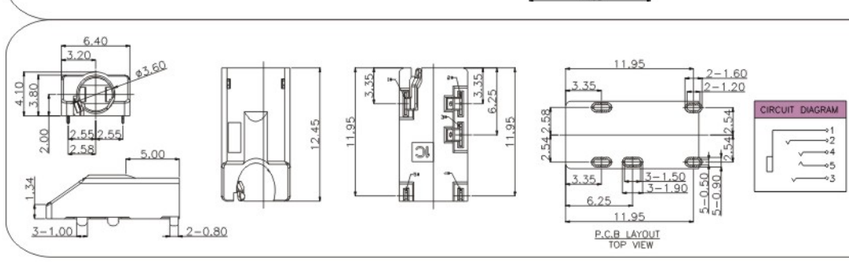

外型图 Dimensions

PJ-621A

IP-X7

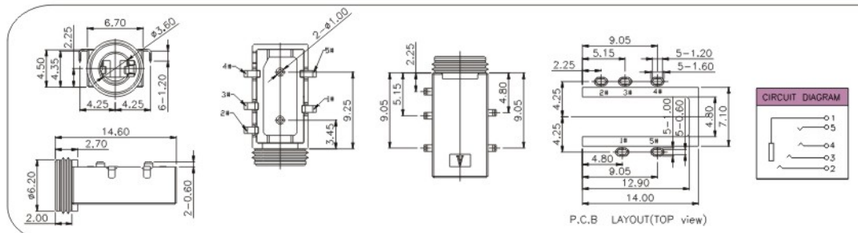

PJ-621B

IP-X7

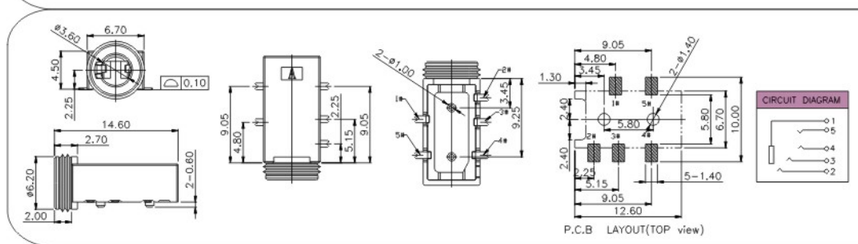

PJ-621C

IP-X7

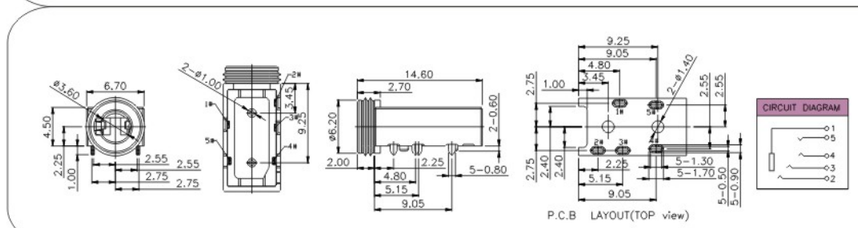

PJ-2040

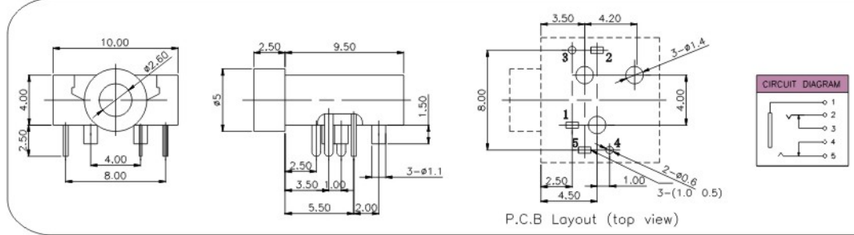

PJ-2050B

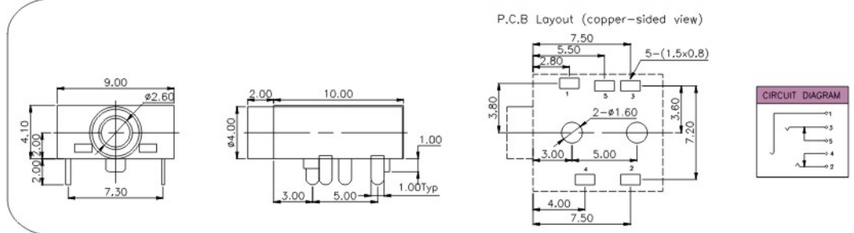

PJ-2060

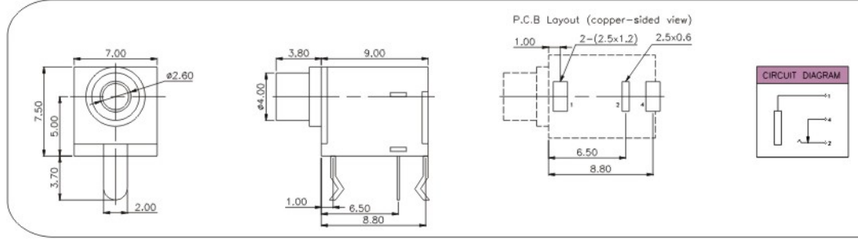

PJ-2080C

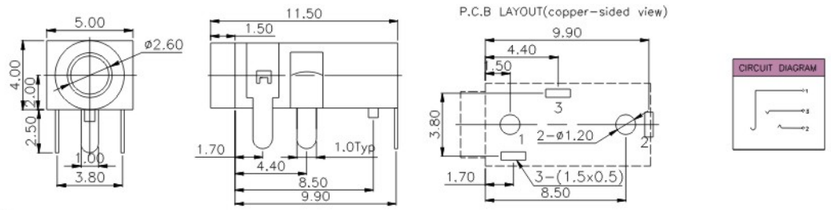

PJ-2100

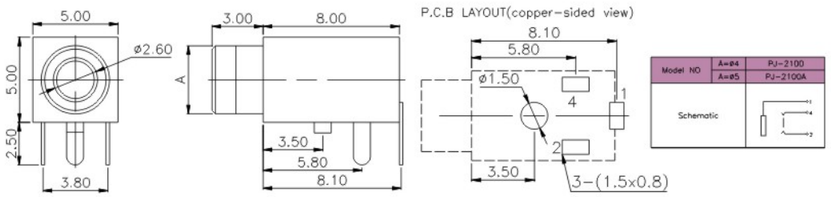

PJ-2102

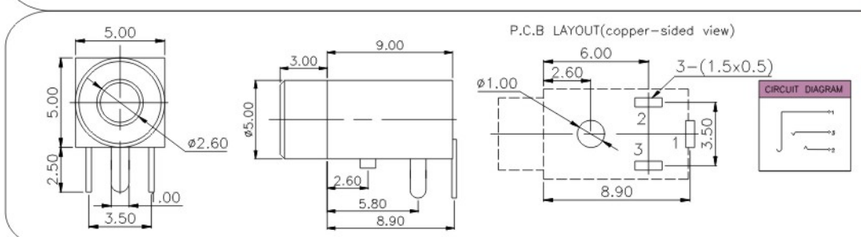

PJ-2104

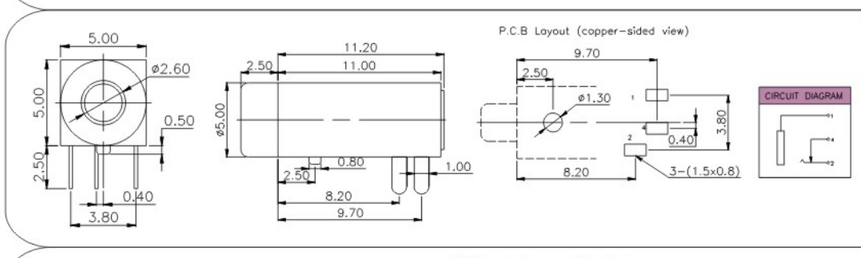

PJ-2105

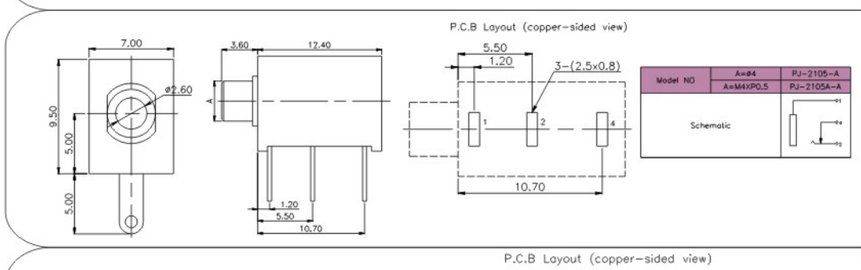

PJ-2110

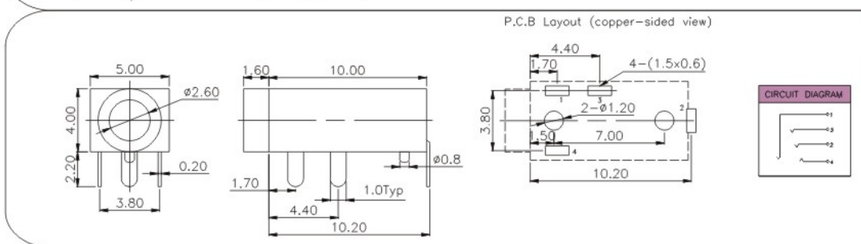

外型图 Dimensions

PJ-3110

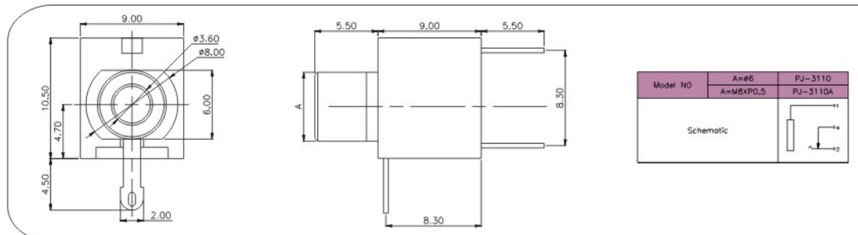

PJ-3111

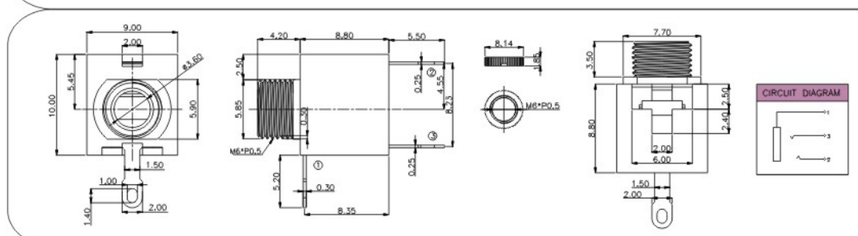

PJ-3119C

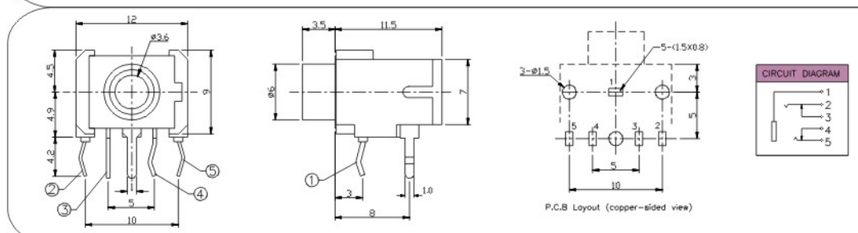

PJ-3123

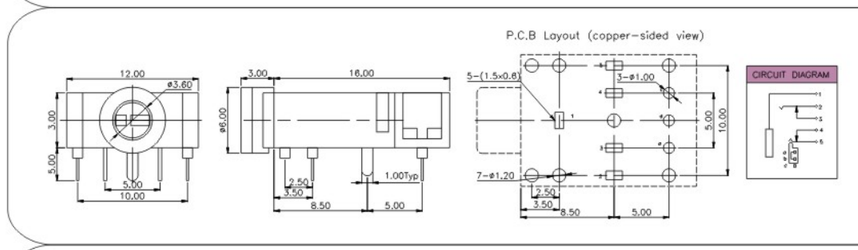

PJ-3126

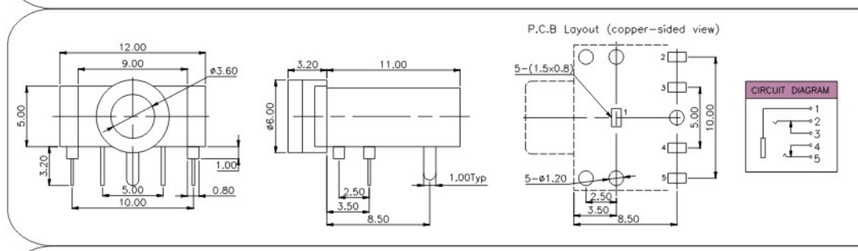

PJ-3132

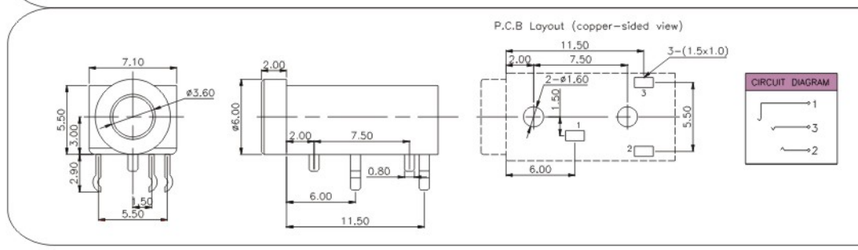

PJ-3133

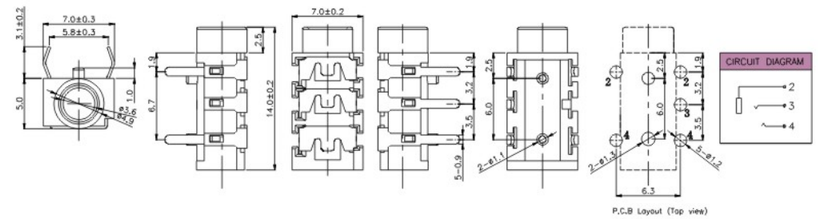

PJ-3133A

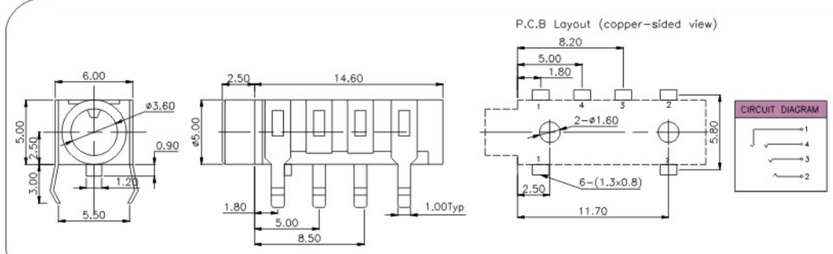

PJ-3133B

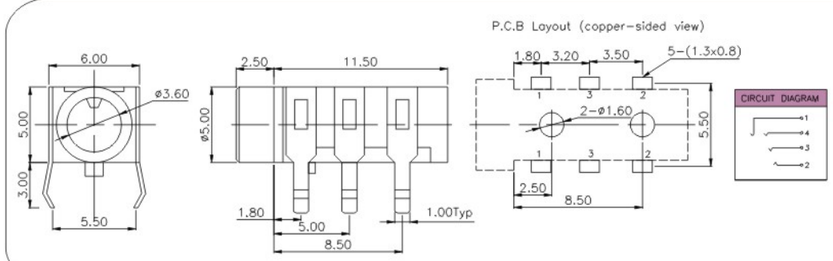

PJ-3134A

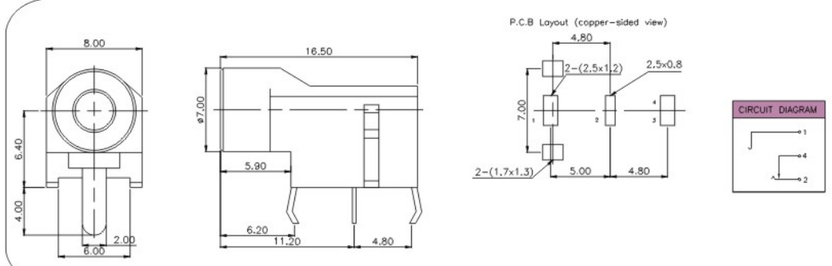

PJ-3136

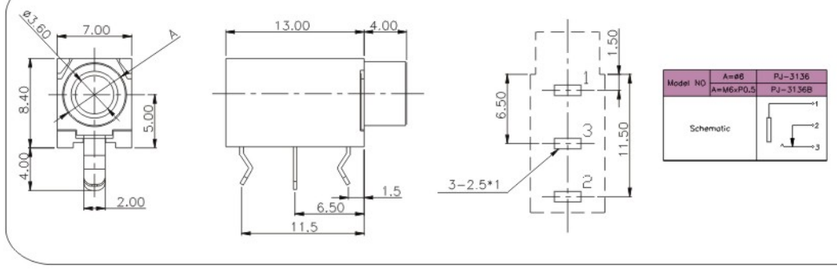

外型图 Dimensions

PJ-3137A

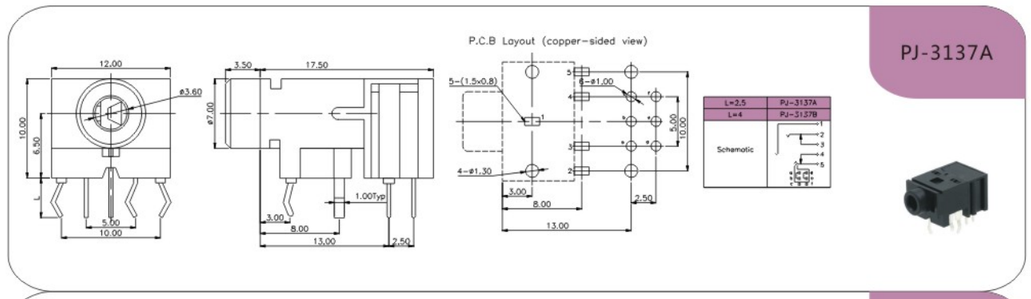

PJ-3200

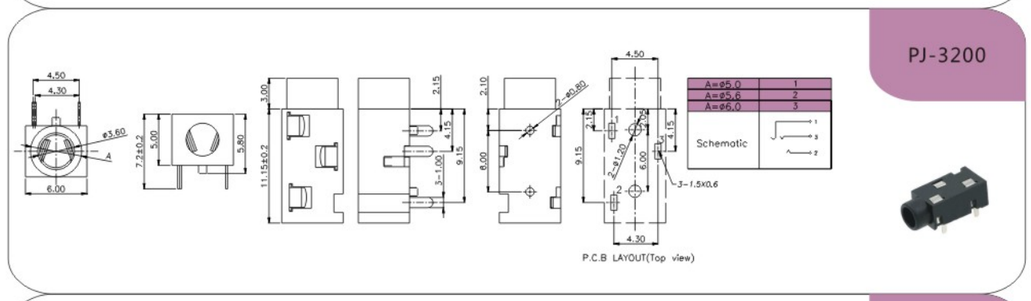

PJ-3200B

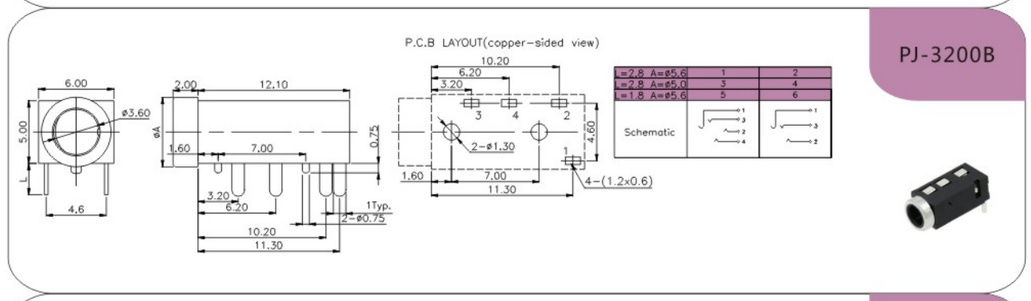

PJ-3210

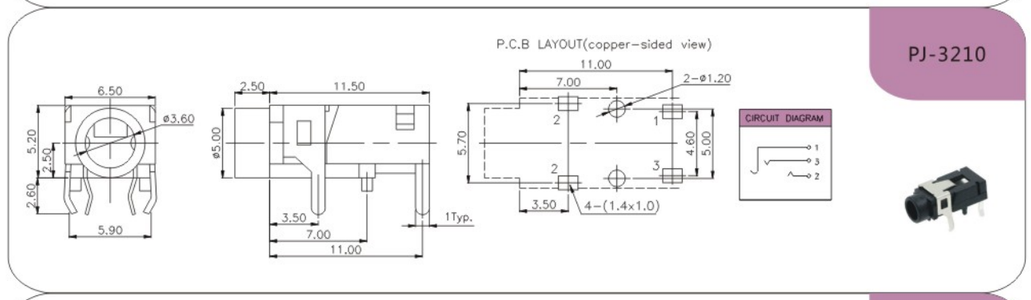

PJ-3210B

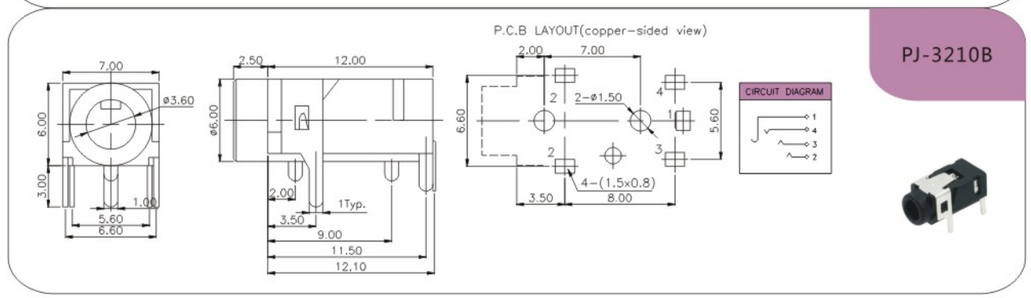

PJ-3220

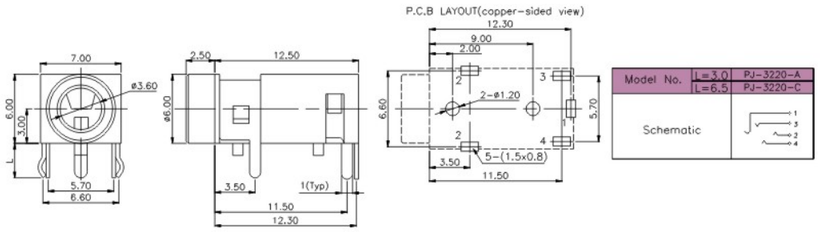

PJ-3230

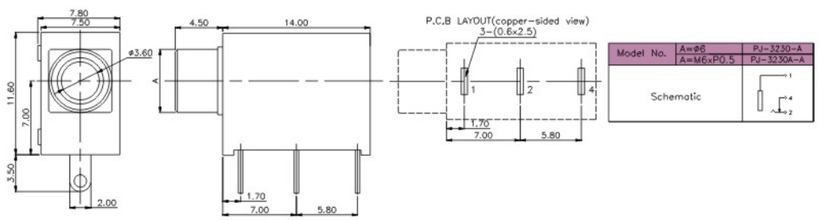

PJ-3240

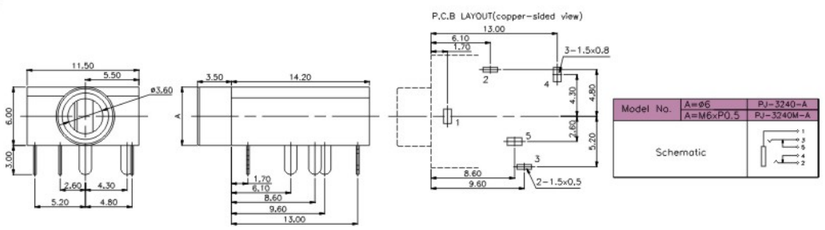

PJ-3250

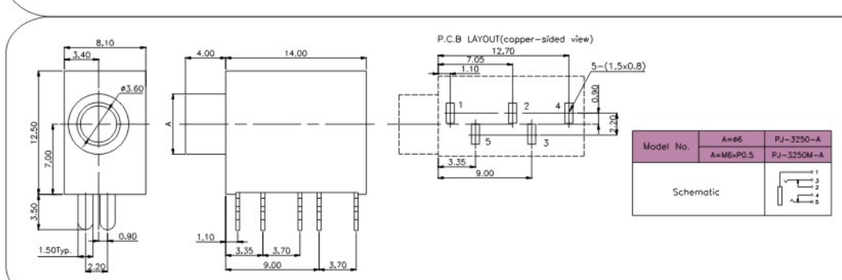

PJ-3270

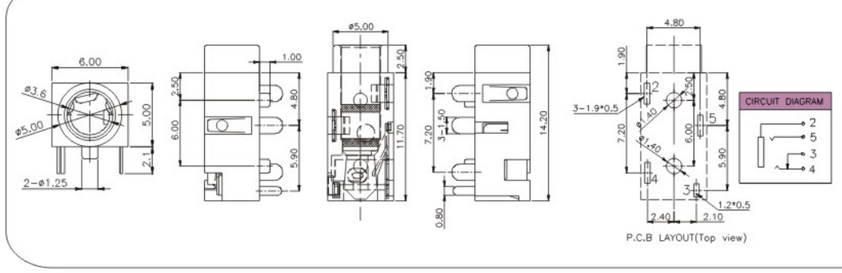

外型图 Dimensions

PJ-3280A

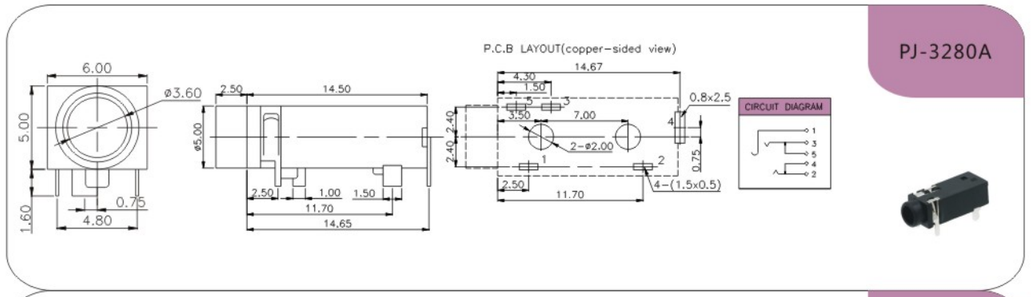

PJ-3280C

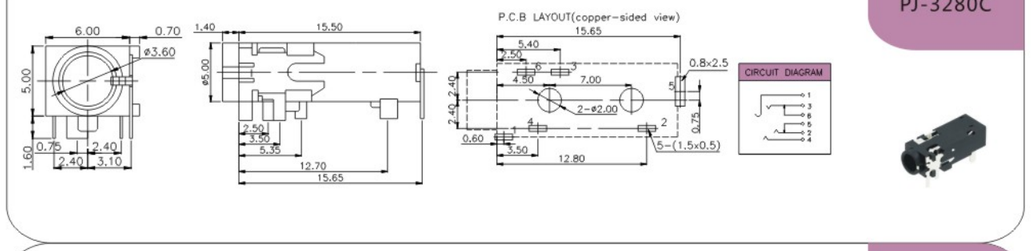

PJ-3310

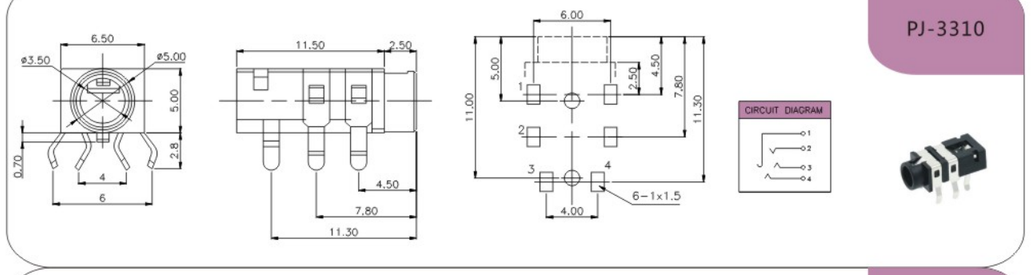

PJ-3330E

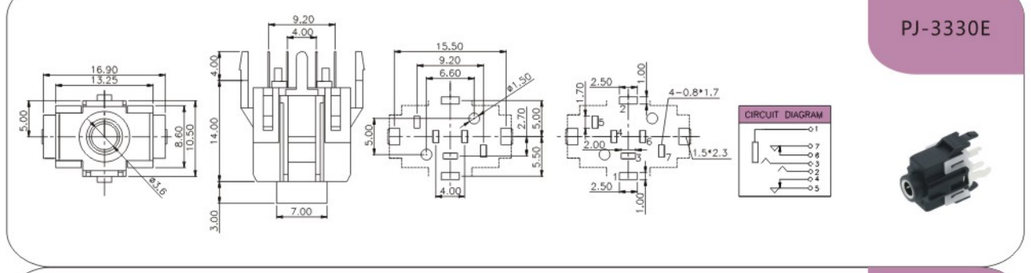

PJ-3390

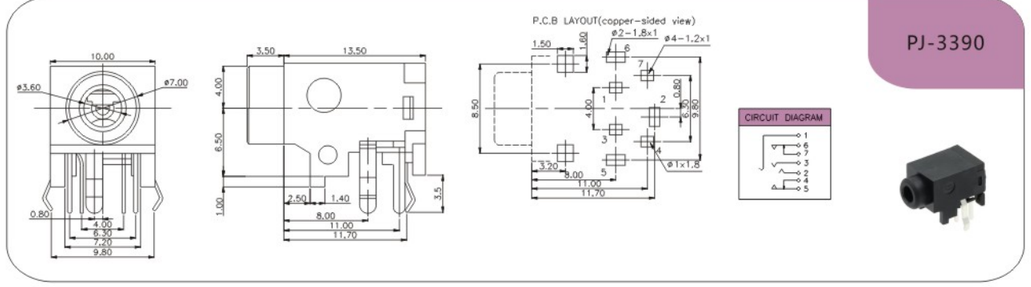

PJ-3420

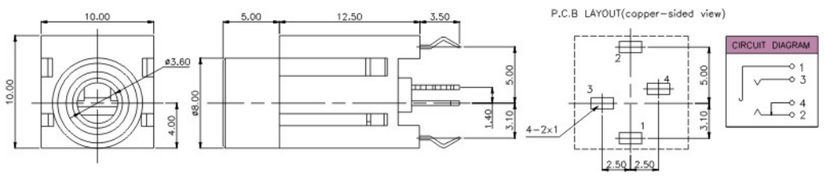

PJ-3540A

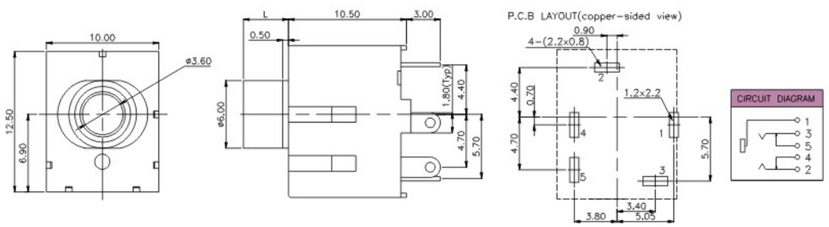

PJ-3580

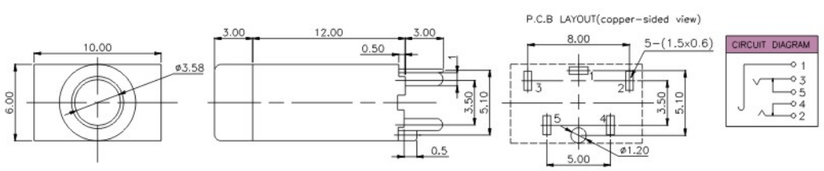

PJ-3580B

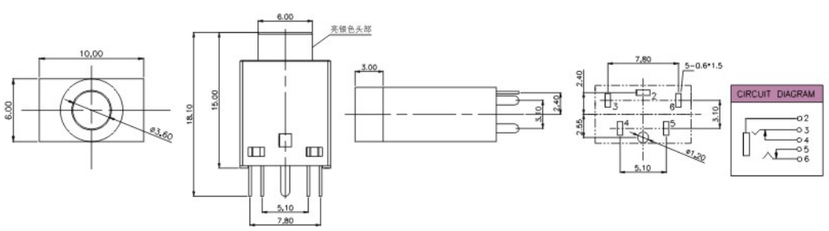

PJ-3620

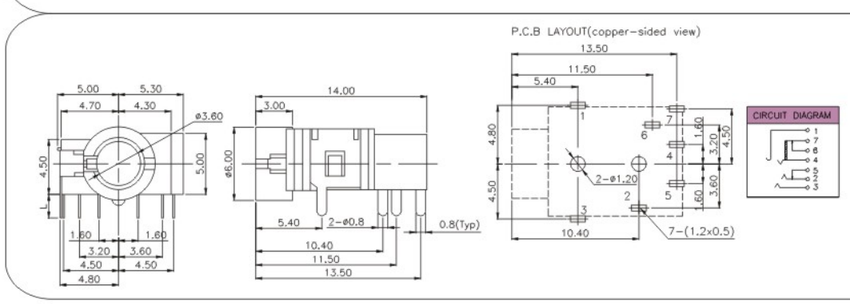

外型图 Dimensions

PJ-3760M

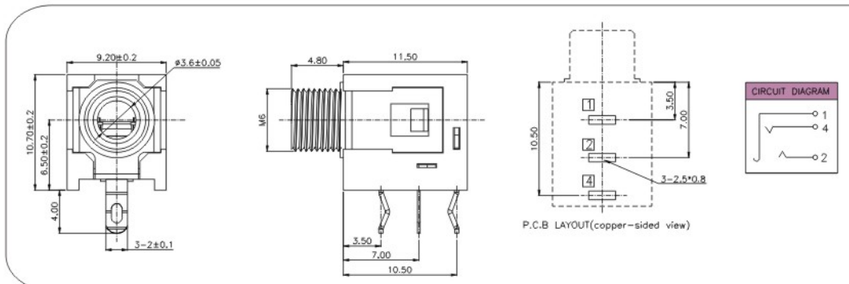

PJ-3783

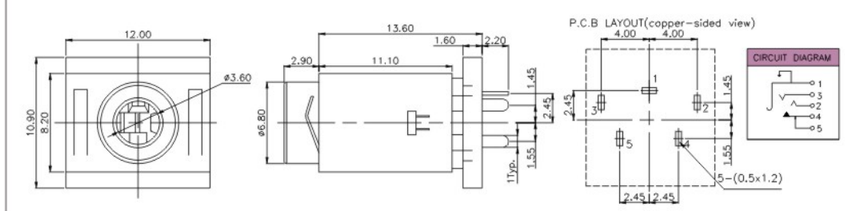

PJ-3810

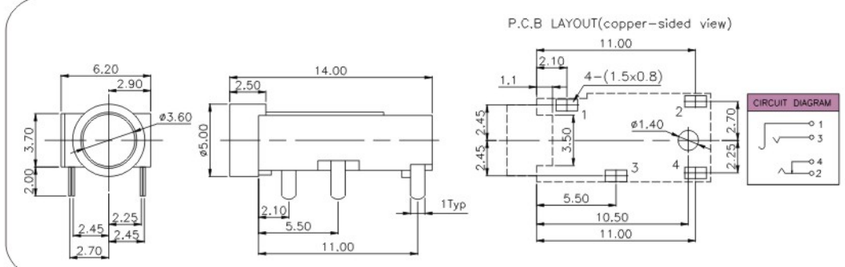

PJ-3850

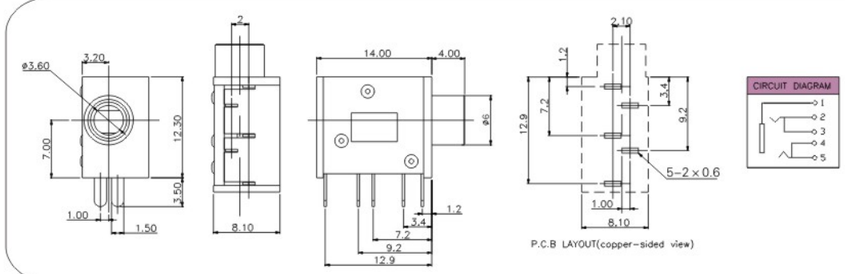

PJ-3900

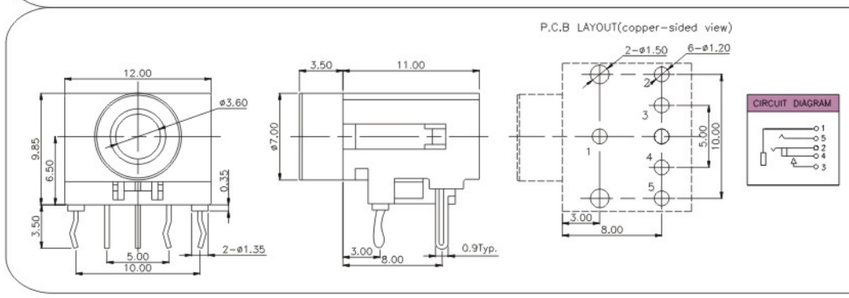

PJ-3910

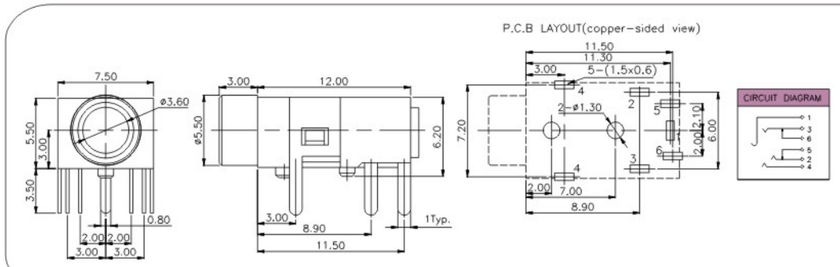

PJ-3920

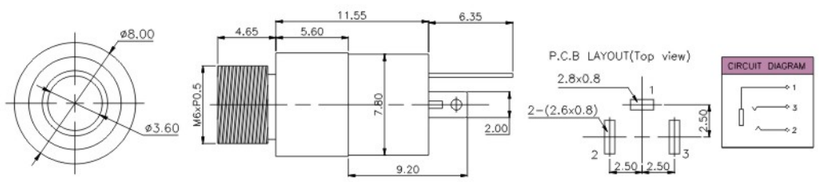

PJ-3930

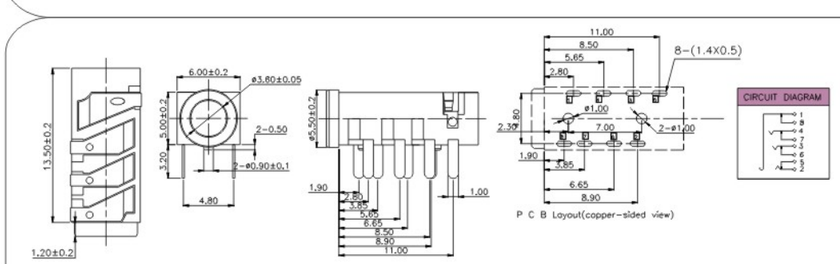

PJ-3970

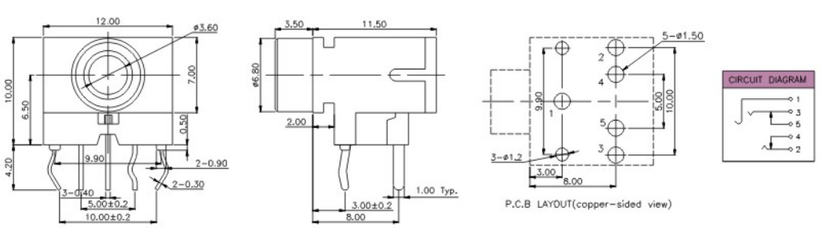

PJ-3973

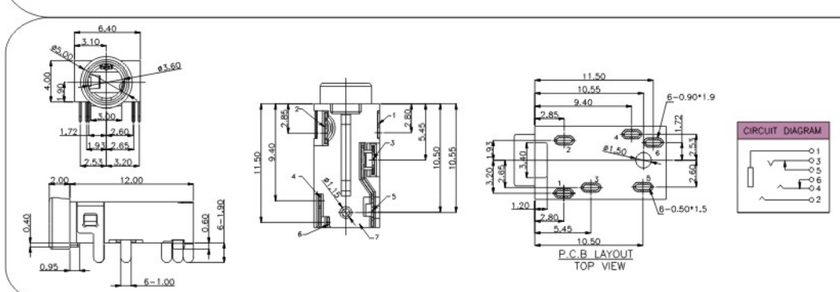

DC插座 >>
DC JACK

DC Jack DC插座

特征 Features

- 具备AC97和HDA等不同规范结构设计。
  With AC97 andDHA etc.different design configuration
- 弹性端子采用优良的进口磷青铜材料，保证弹性部件的寿命。
  Terminal is made from eximious bronze material to assure long life
- 安装形式有DIP和SMT供选择。
  Assembly ways:DIP and SMT
- 接触端子采用弹性结构设计，保证良好的接触稳定性和长寿命要求。
  Flexibility design for terminal interface to ensure nice contact and prolong
- 可依据客户要求设计不同功能输出产品。

规格参数 Basic specfication parameter

电气特性 Electrical Characteristics	额定负荷 Rating	DC 30V 0.5A
	接触阻抗 Contact Resistance	≤100mΩ
	绝缘阻抗 Insulation Resistance	≥100mΩ
	绝缘耐电压 Withstand voltage	AC500V(50-60HZ) 1Minute
	电气寿命 Electrical Life	5,000Cycles
机械/可靠性特性 Mechanical/reliability Characteristics	操作力 Operating force range	3-20N
	机械寿命 Mechanical Life	5,000Cycles
	使用温度 Operating temperature range	-25°C+80°C
	使用湿度 Ambient humidity used	≤85%RH
	可焊性 Solder ability	245°C ± 5°C 3S ± 1S
	耐焊接热 Withstand Soldering temperature	260°C ± 5°C 3S ± 1S

焊接条件 Welding conditions

- 手工焊 Hand soldering
  使用30瓦烙铁，烙铁尖端温度不超过350℃，焊接时间3S。
  Use a soldering iron of 30 watts, Controlled at 350°C approximately 3 seconds while solder applying
- 波峰焊/回流焊Wave soldering/Reflow Soldering
  峰值温度不超过260℃，焊接时间不超过5S（焊接温度曲线参考如下）。
  The peak temperature of the wave oven should be set to 260°C max.Condition for soldering Temperature Profile

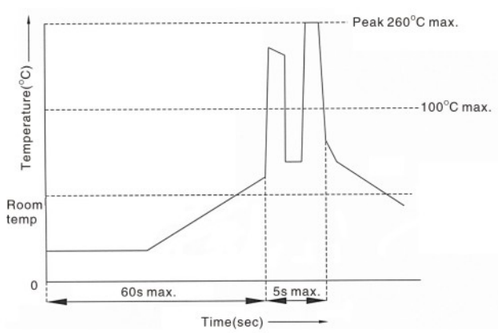

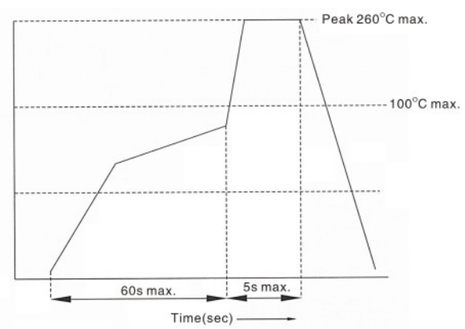

外型图 Dimensions

DC-002A

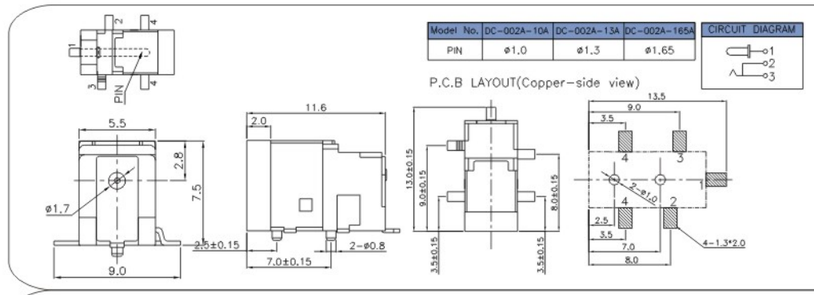

DC-002

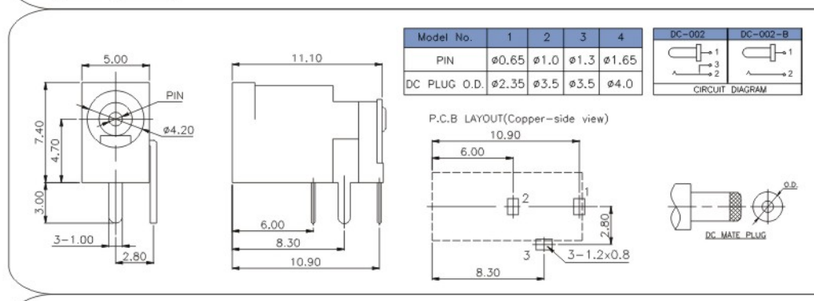

DC-003

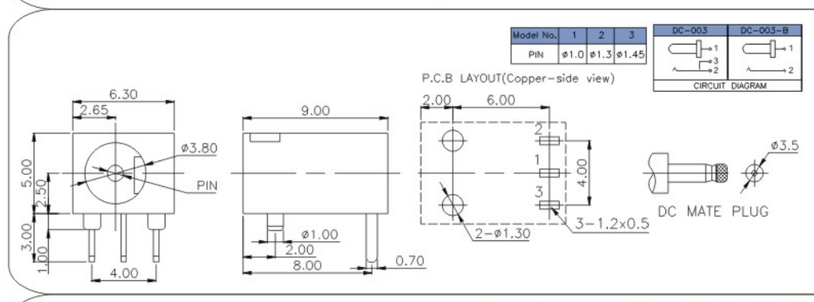

DC-003A

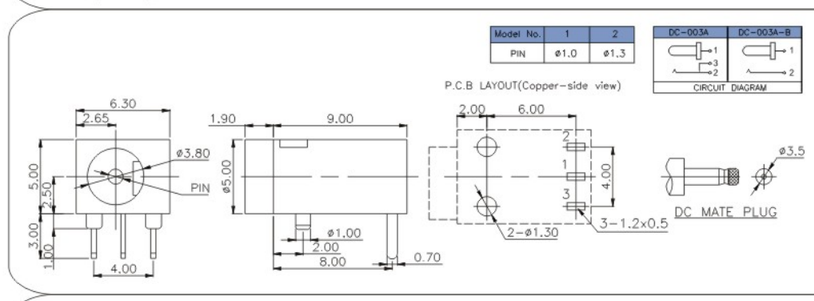

DC-004A

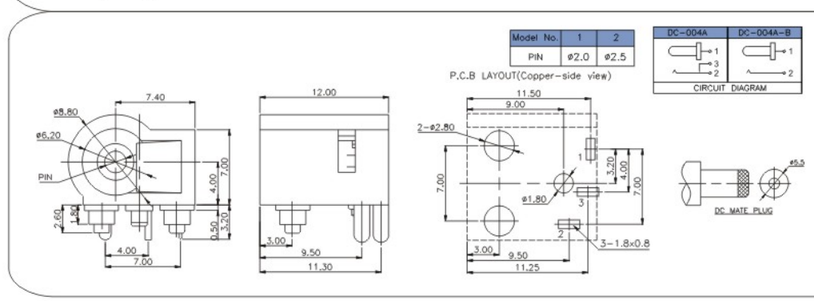

DC-005

Model No.	DC-005-20A	DC-005-25A
PIN	ø2.0	ø2.5

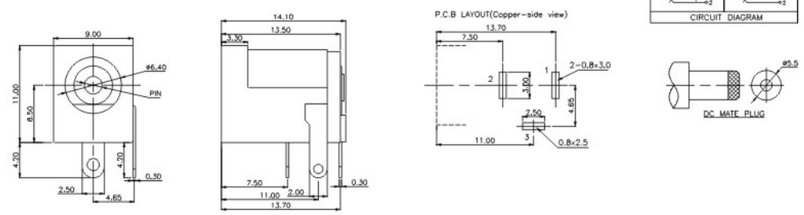

DC-005A

Model No.	1	2	3
PIN	ø2.0	ø2.35	ø2.5

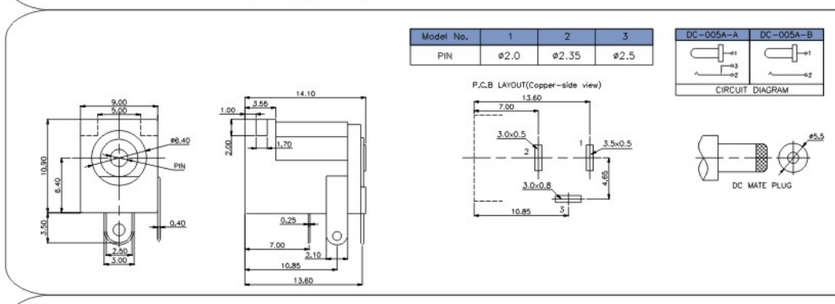

DC-005B

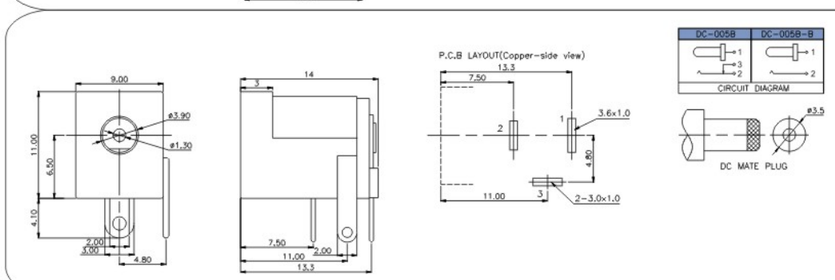

DC-005C

Model No.	1	2
PIN	ø2.0	ø2.5

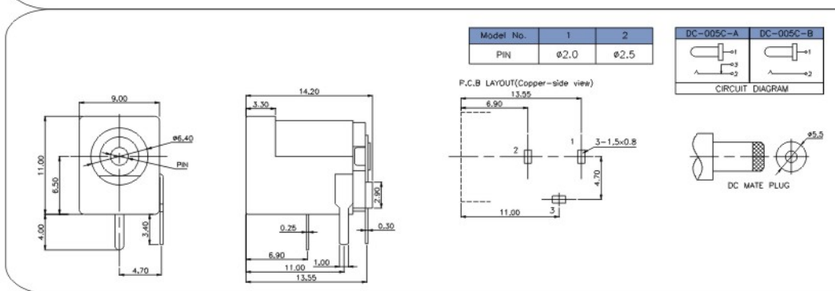

DC-006

Model No.	1	2
PIN	ø1.0	ø1.3

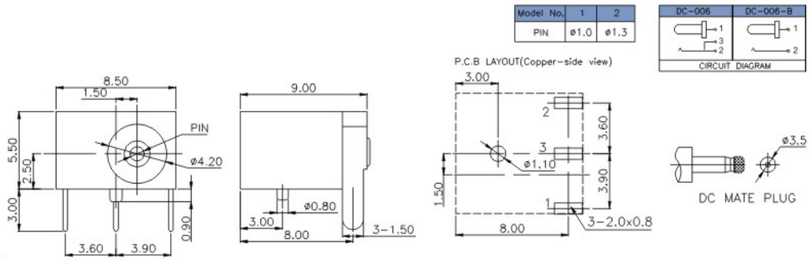

外型图 Dimensions

DC-006B

Model No.	1	2
PIN	ø1.0	ø1.3

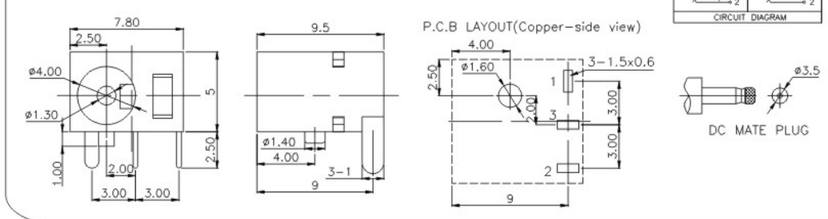

DC-006D

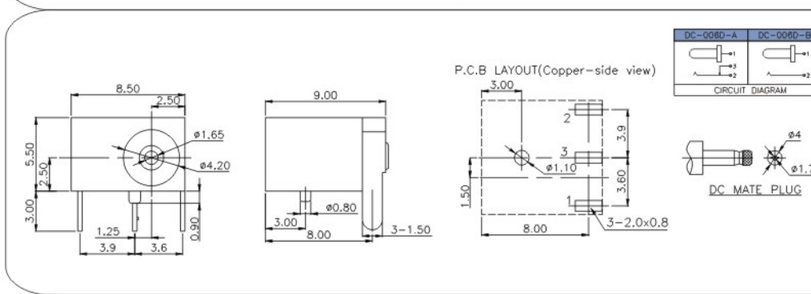

DC-009

Model No.	1	2	3
PIN	ø2.0	ø2.35	ø2.5

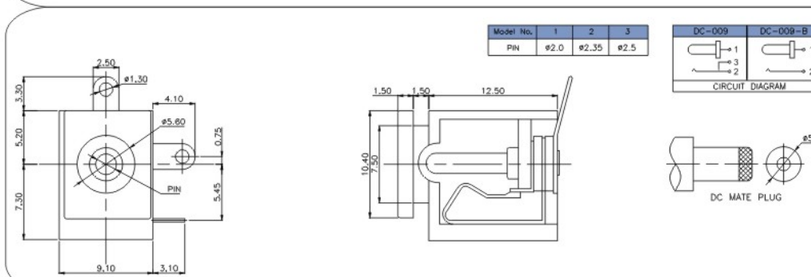

DC-011

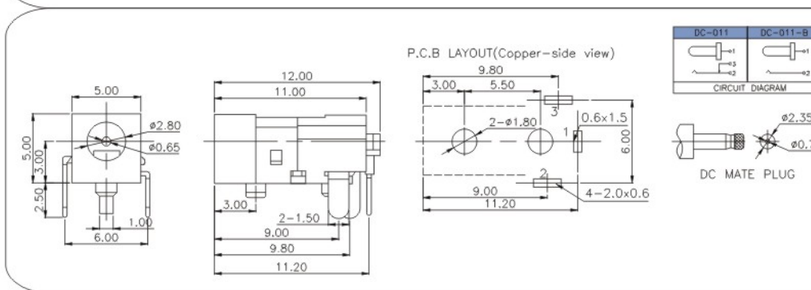

DC-011A

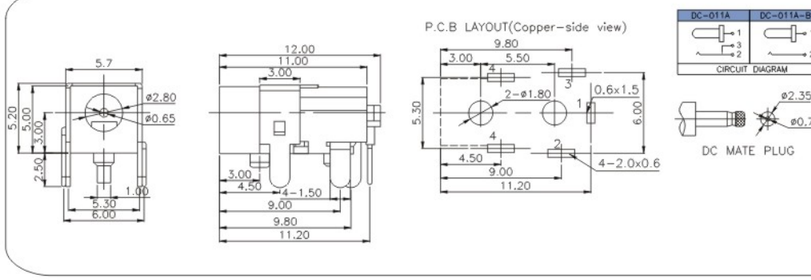

DC-011B

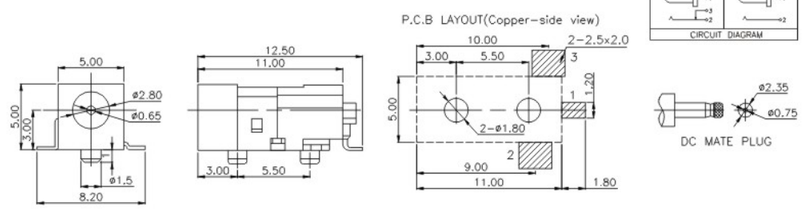

DC-011C

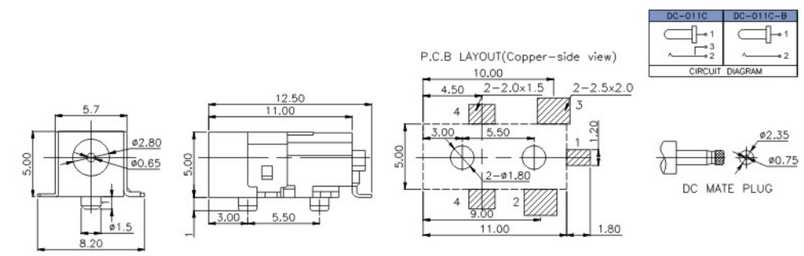

DC-012

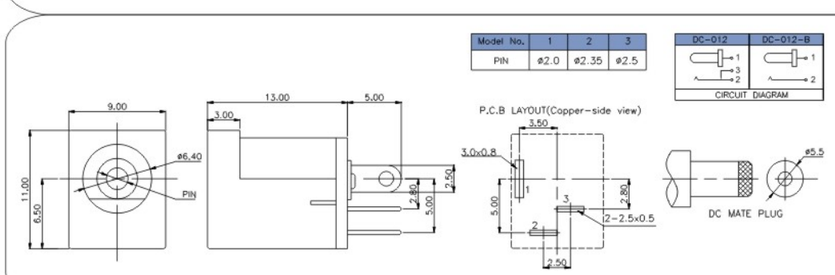

DC-012A

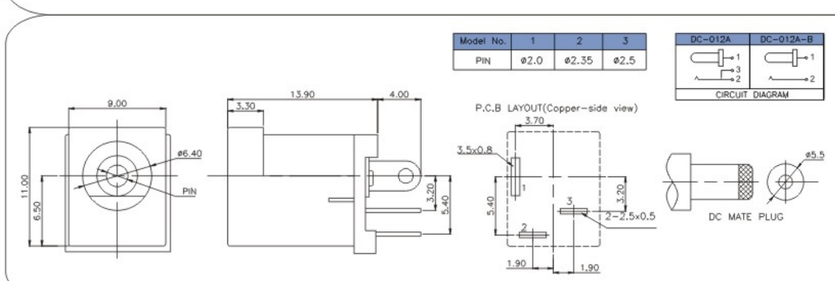

DC-013

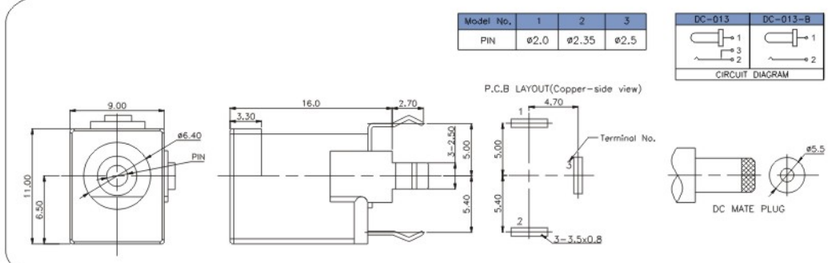

外型图 Dimensions

DC-013B

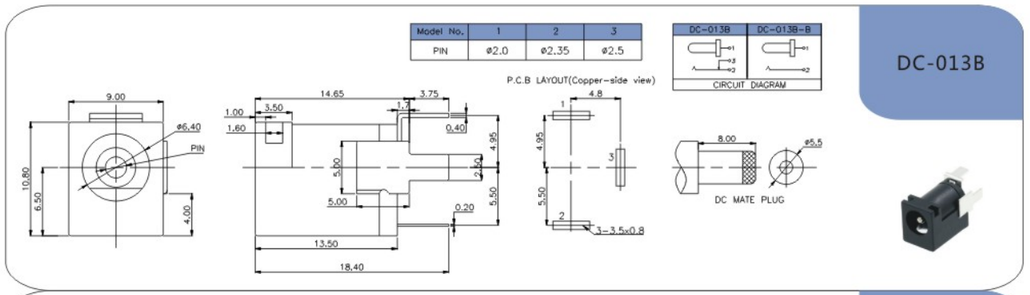

DC-014

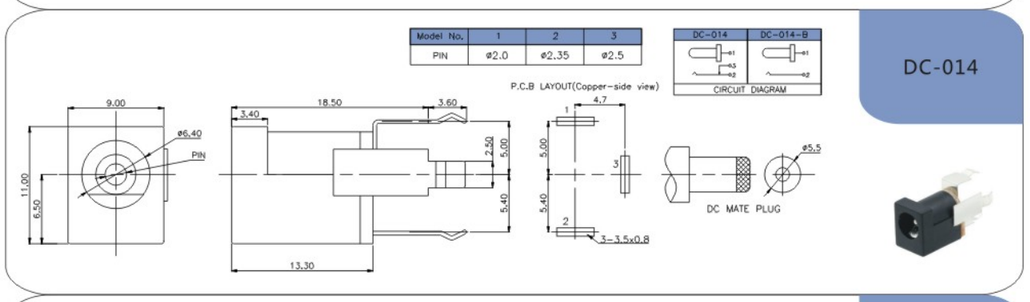

DC-015B

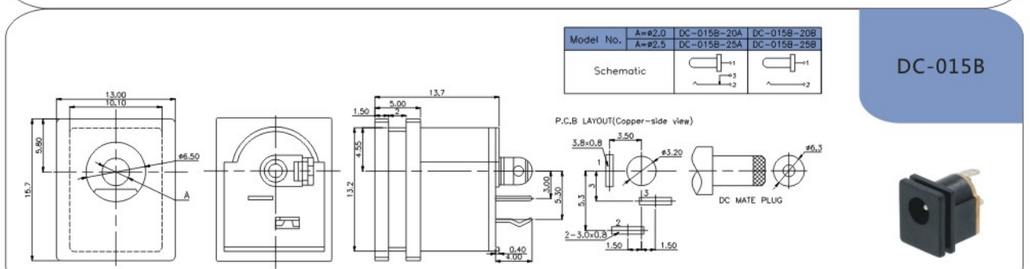

DC-016

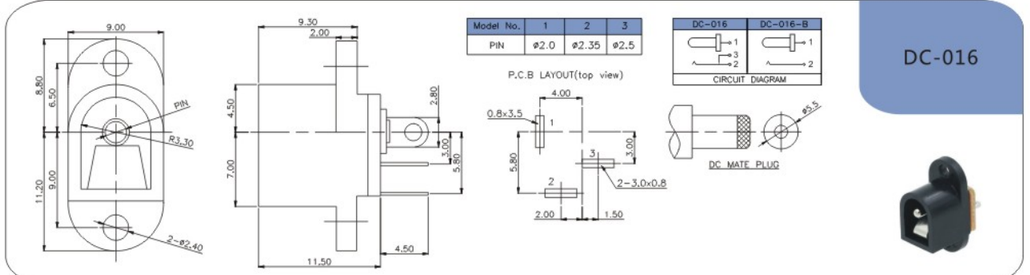

DC-016A

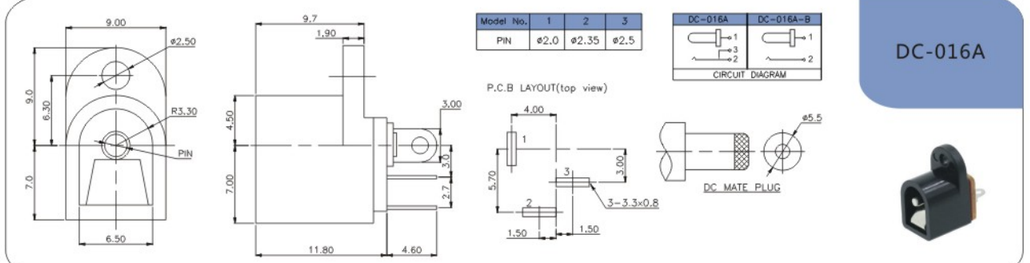

DC-017

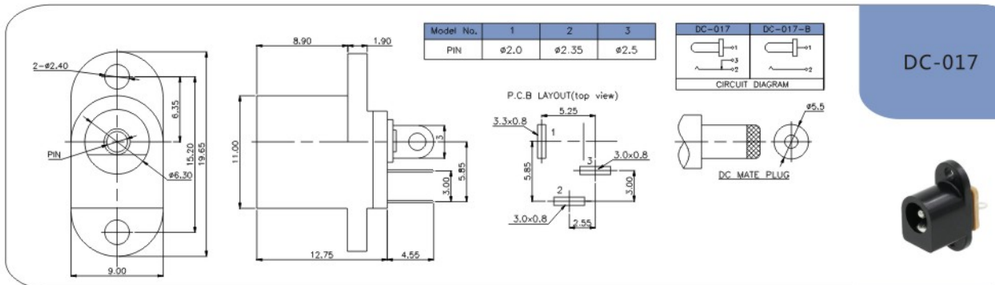

Model No.	1	2	3
PIN	ø2.0	ø2.35	ø2.5

DC-018

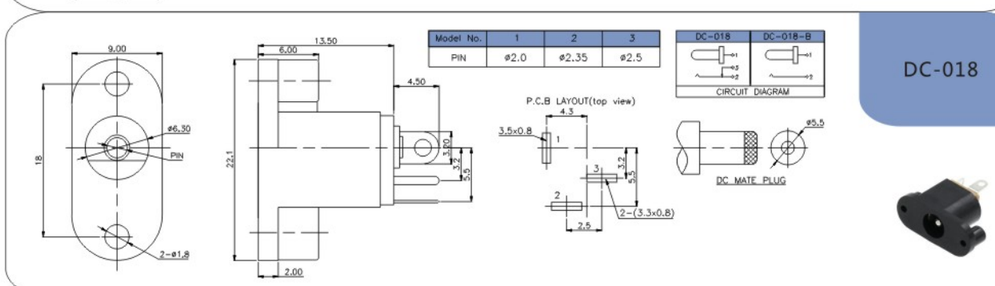

Model No.	1	2	3
PIN	ø2.0	ø2.35	ø2.5

DC-021

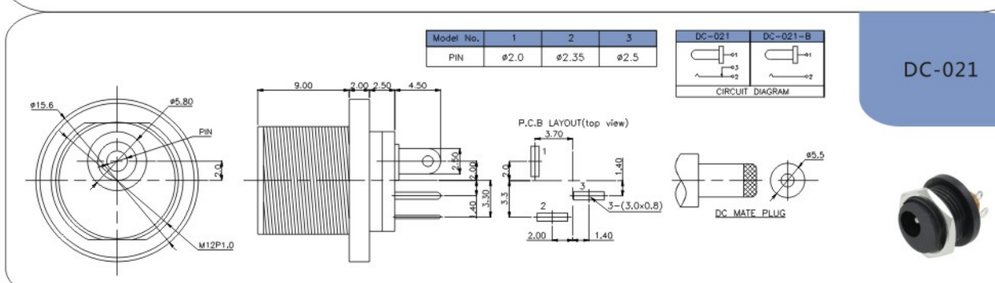

Model No.	1	2	3
PIN	ø2.0	ø2.35	ø2.5

DC-022

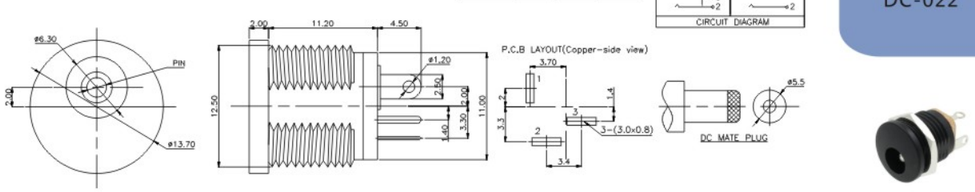

Model No.	1	2	3
PIN	ø2.0	ø2.35	ø2.5

DC-023

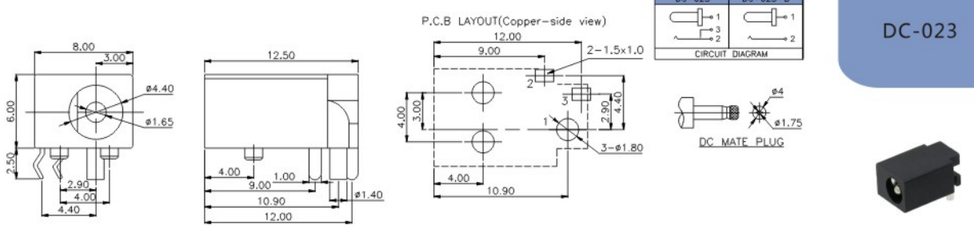

外型图 Dimensions

DC-024

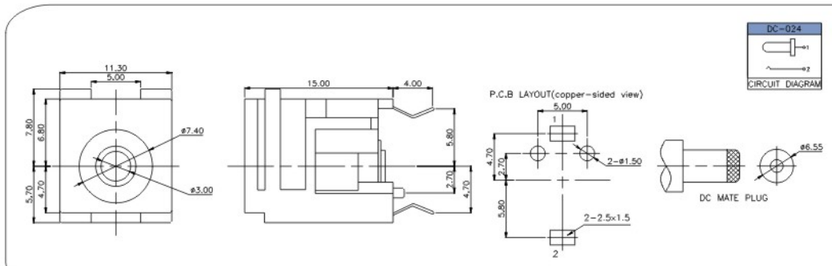

DC-025M

Model No.	1	2	3
PIN	ø2.0	ø2.35	ø2.5

Model No.	DC-025	DC-025M
A	ø8.0	M8xP0.75

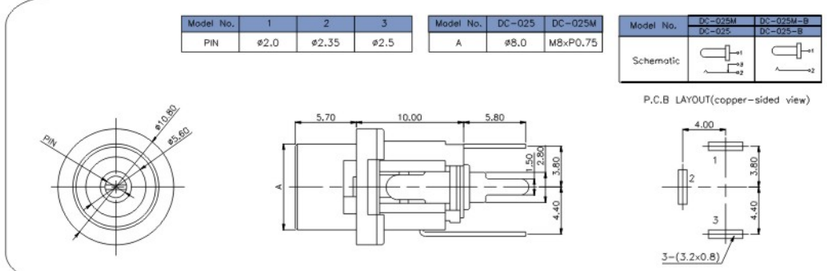

DC-025BM

Model No.	1	2	3
PIN	ø2.0	ø2.35	ø2.5

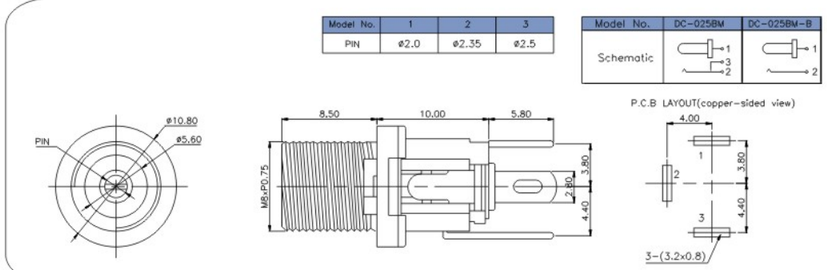

DC-026M

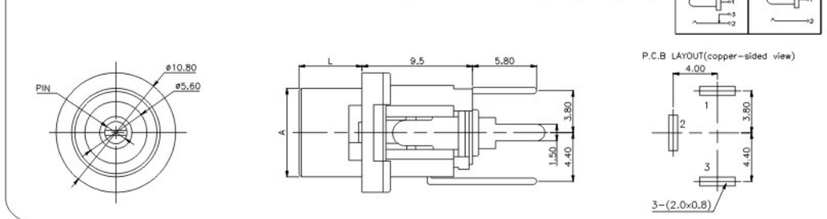

DC-027S

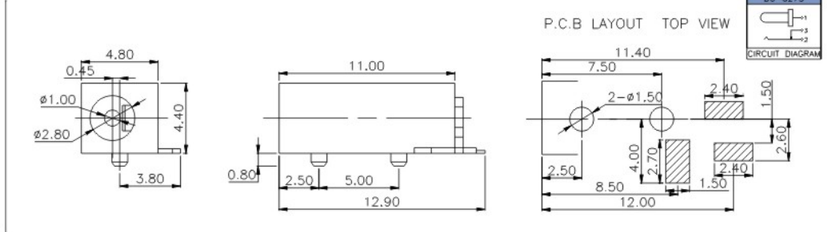

DC-028

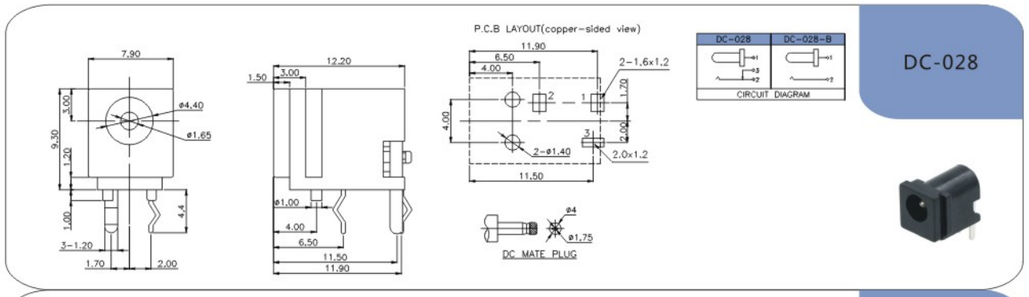

DC-028S

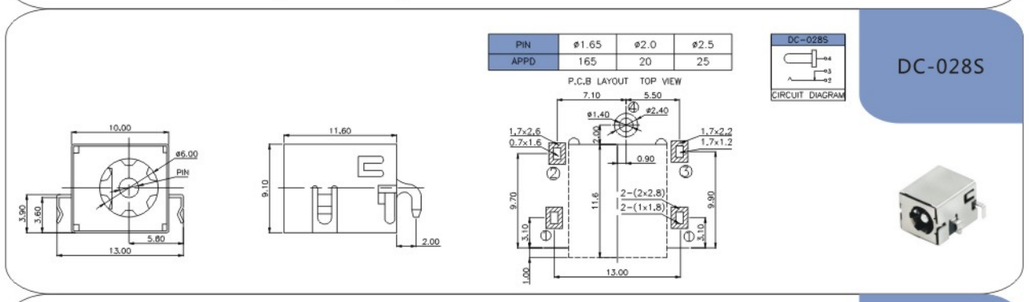

DC-029

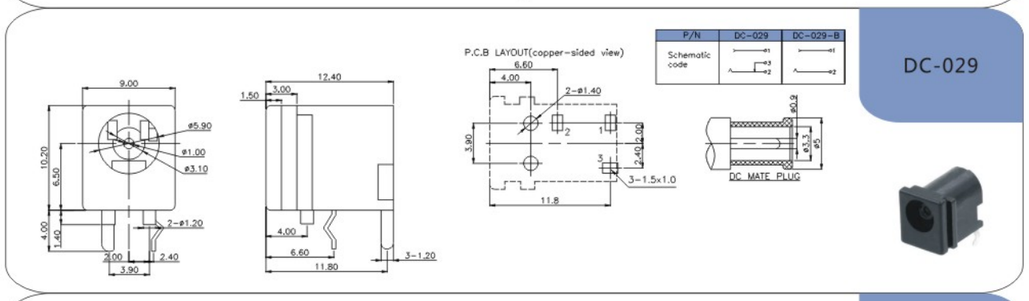

DC-030

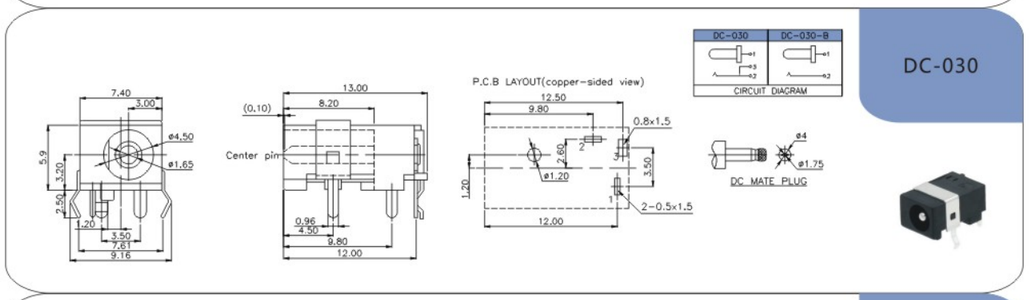

DC-031

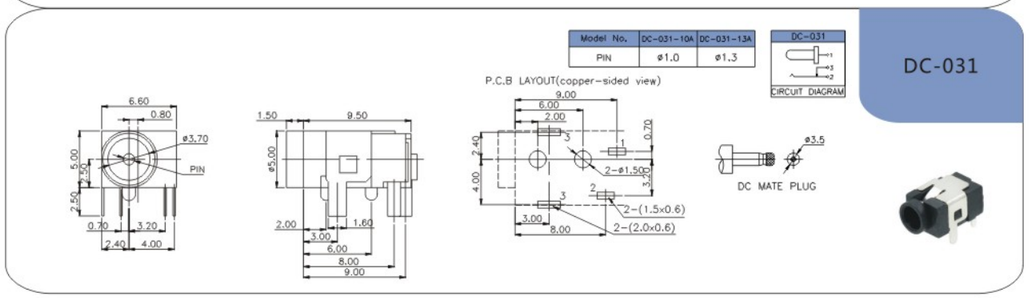

外型图 Dimensions

DC-031A

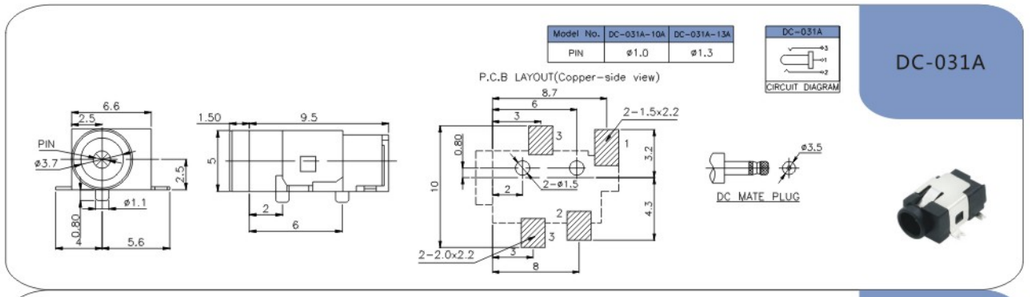

DC-033

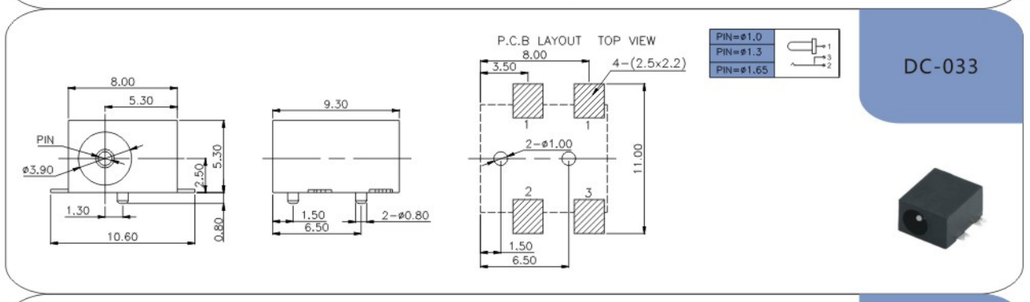

DC-035

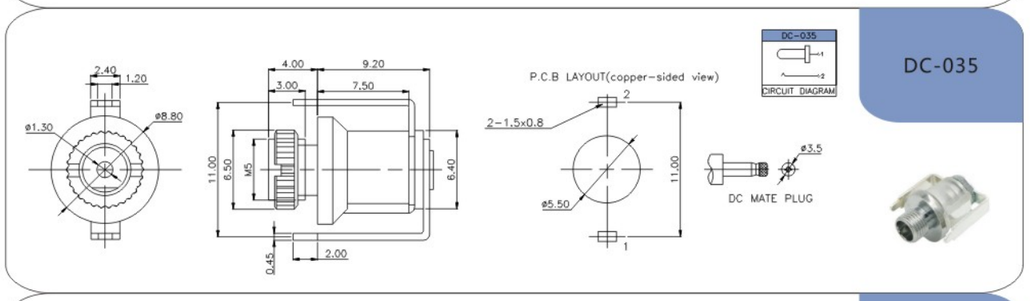

DC-037

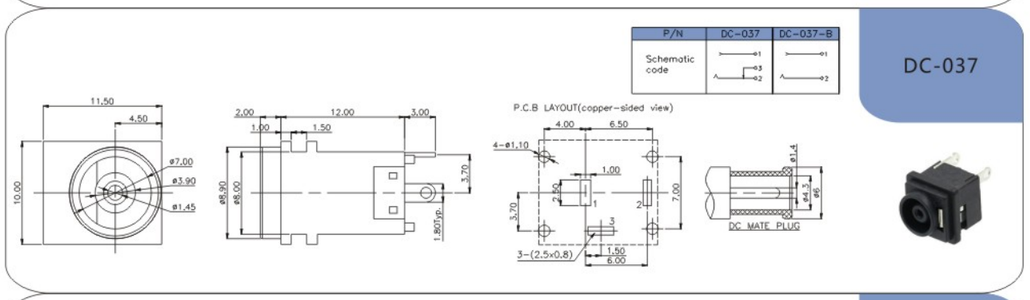

DC-037B

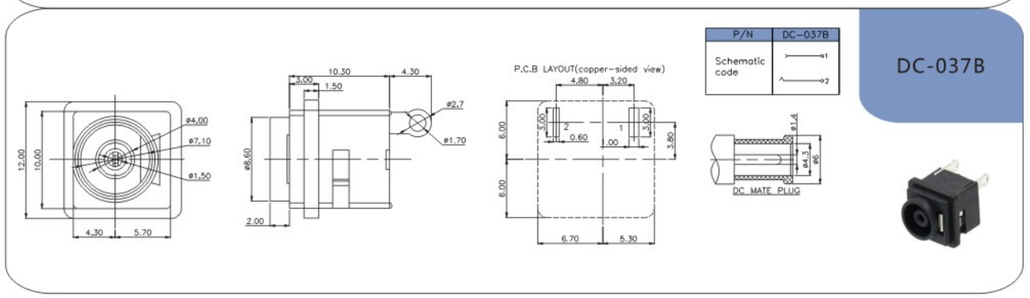

DC-038

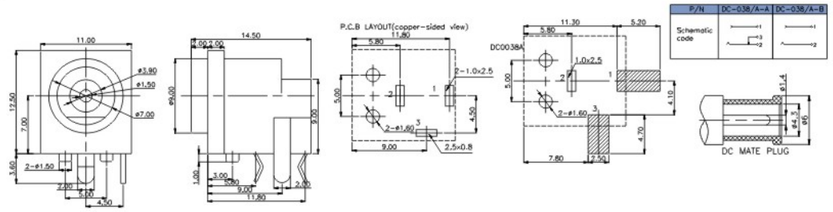

DC-041

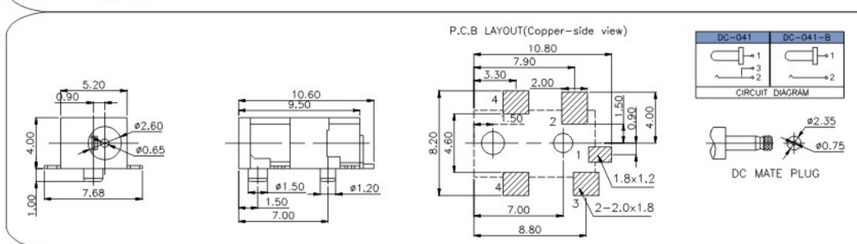

DC-043

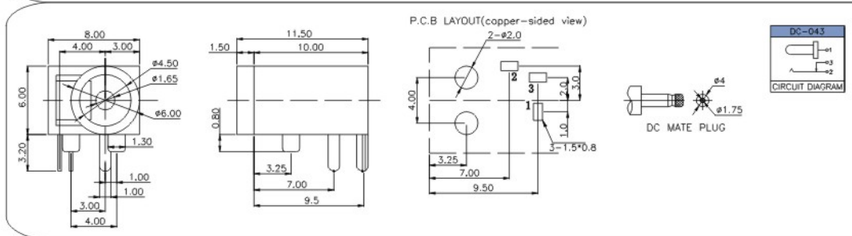

DC-044

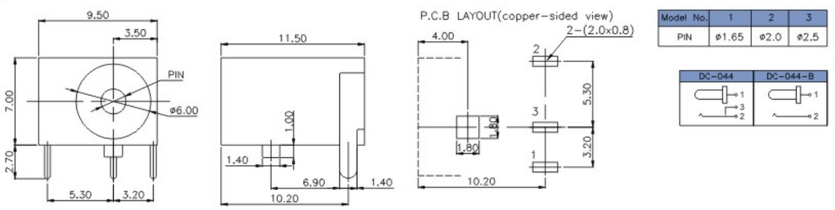

Model No.	1	2	3
PIN	ø1.65	ø2.0	ø2.5

DC-044A

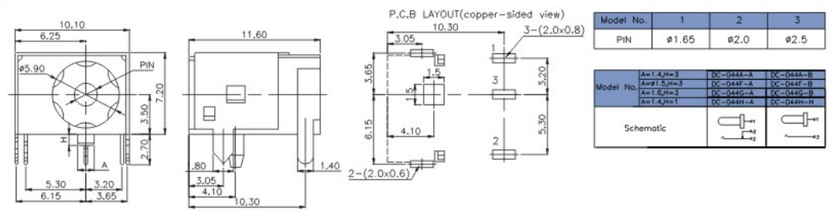

Model No.	1	2	3
PIN	ø1.65	ø2.0	ø2.5

Model No.			
	A=1.4,H=3	DC-044A-A	DC-044A-B
	A=ø1.5,H=3	DC-044F-A	DC-044F-B
	A=1.6,H=3	DC-044G-A	DC-044G-B
	A=1.4,H=1	DC-044H-A	DC-044H-H
Schematic			

DC-044C

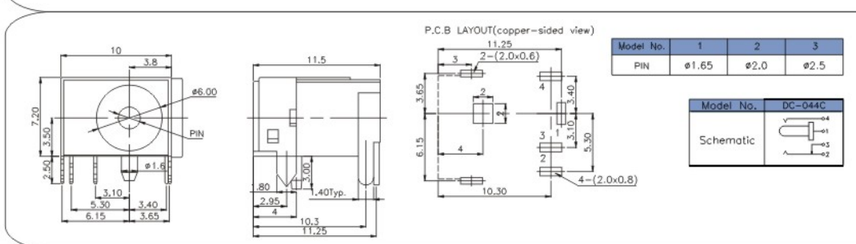

Model No.	1	2	3
PIN	ø1.65	ø2.0	ø2.5

Model No.	DC-044C
Schematic	

外型图 Dimensions

DC-044S

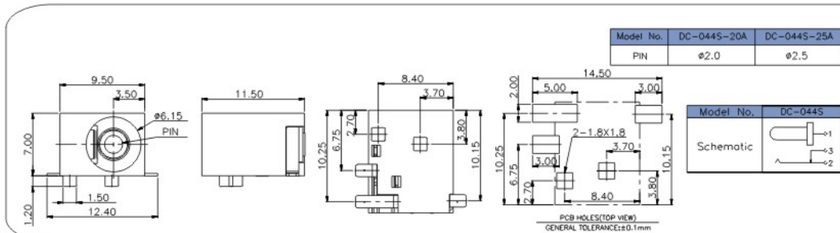

Model No.	DC-044S-20A	DC-044S-25A
PIN	ø2.0	ø2.5

Model No.	DC-044S
Schematic	

DC-045A

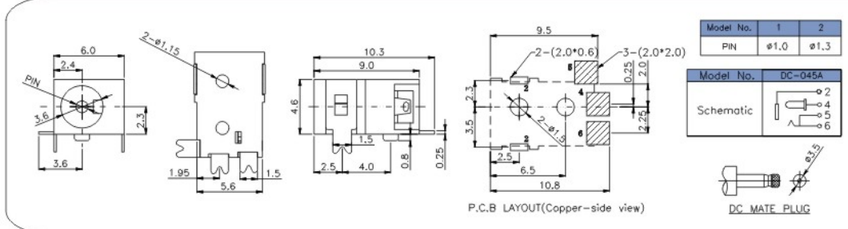

Model No.	1	2
PIN	ø1.0	ø1.3

Model No.	DC-045A
Schematic	

DC-045B

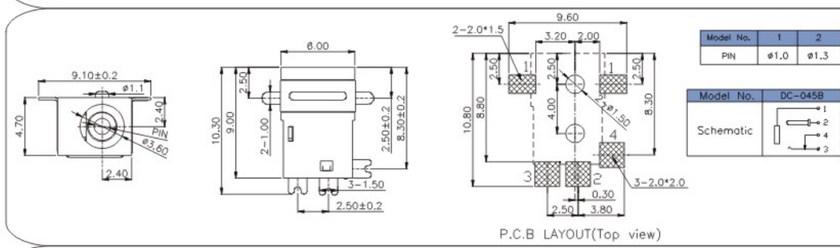

Model No.	1	2
PIN	ø1.0	ø1.3

Model No.	DC-045B
Schematic	

DC-047

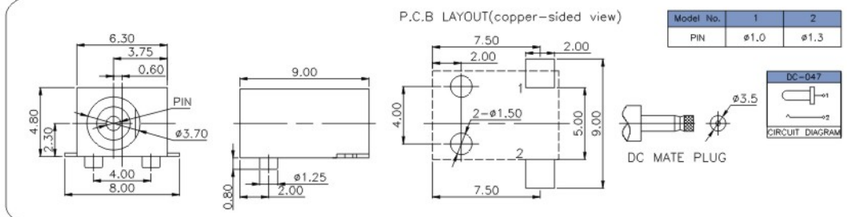

Model No.	1	2
PIN	ø1.0	ø1.3

DC-047B

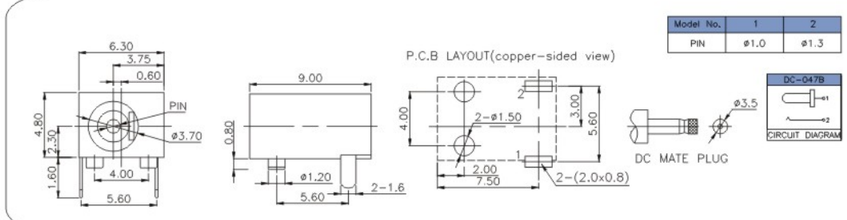

Model No.	1	2
PIN	ø1.0	ø1.3

DC-048

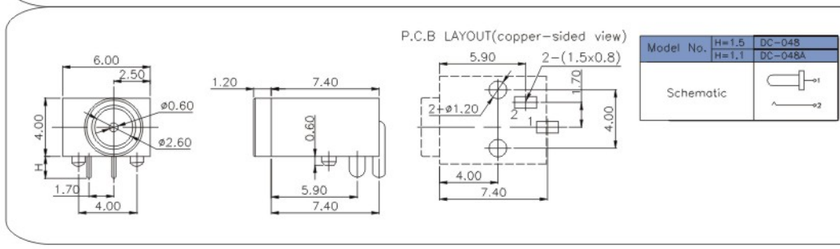

Model No.	H=1.5	DC-048
	H=1.1	DC-048A
Schematic		

DC-049A

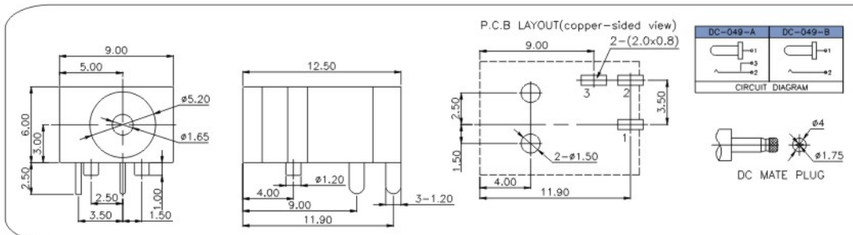

DC-050

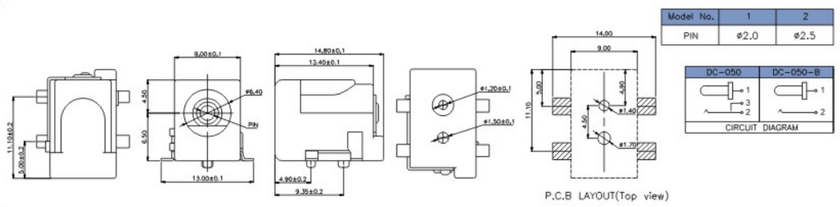

DC-052

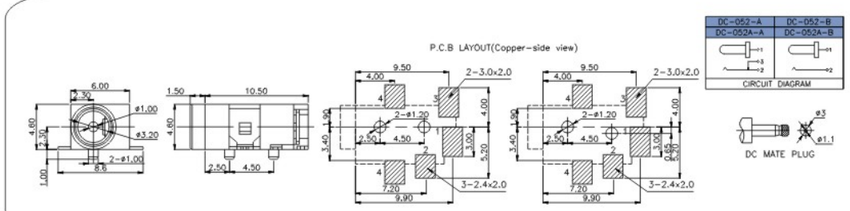

DC-053D

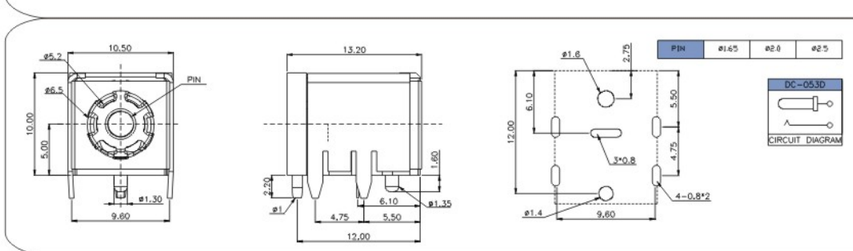

DC-054A

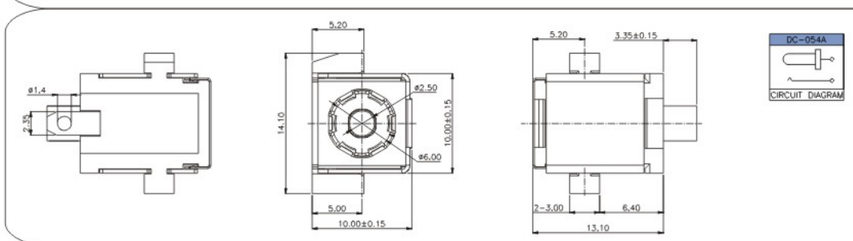

DC-055

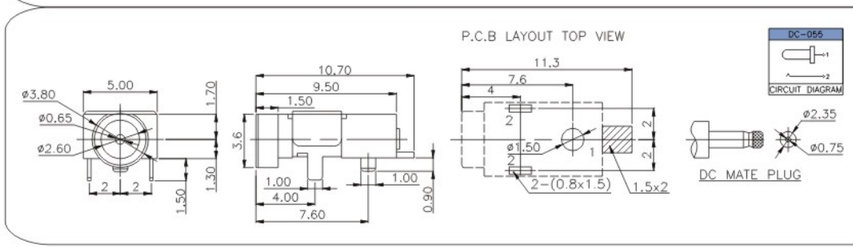

外型图 Dimensions

DC-055D

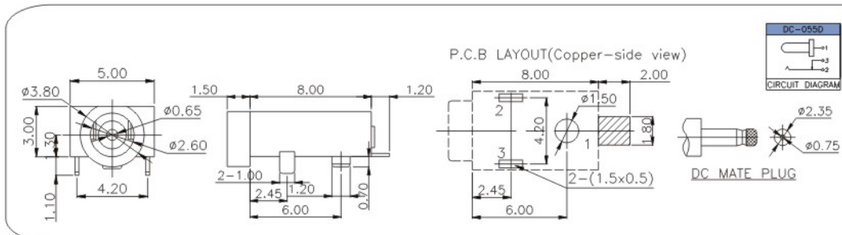

DC-055S

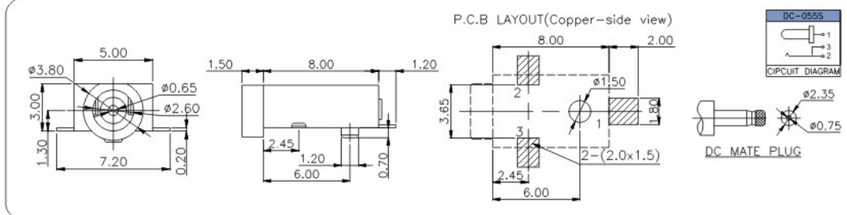

DC-056

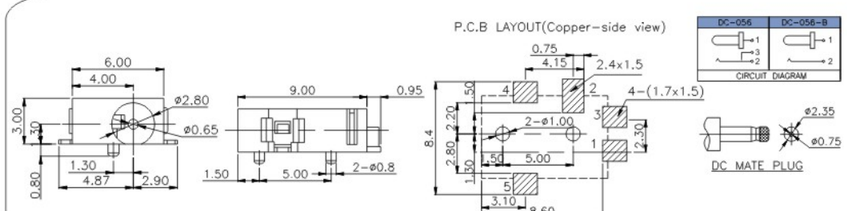

DC-060

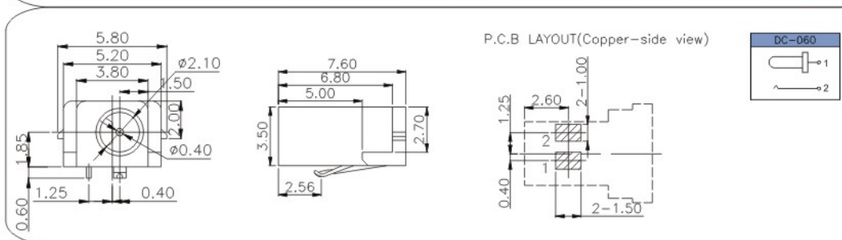

DC-060A

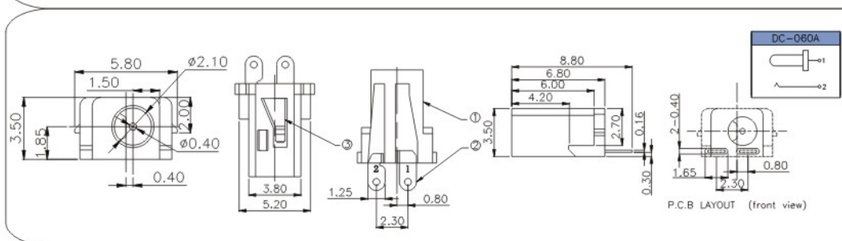

DC-060S

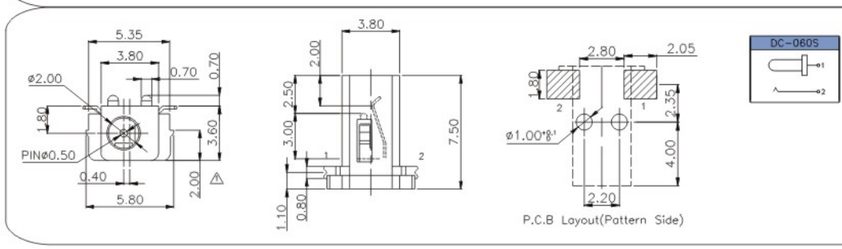

DC-061

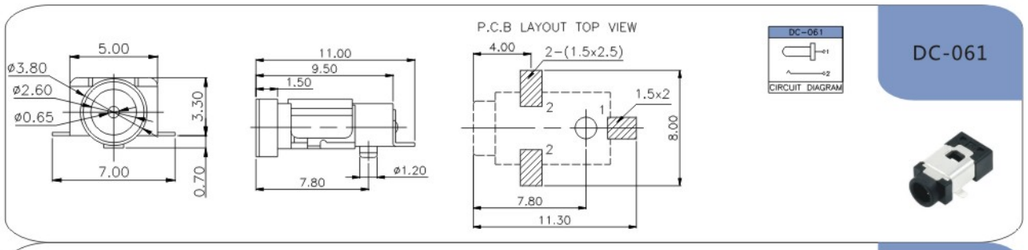

DC-061S

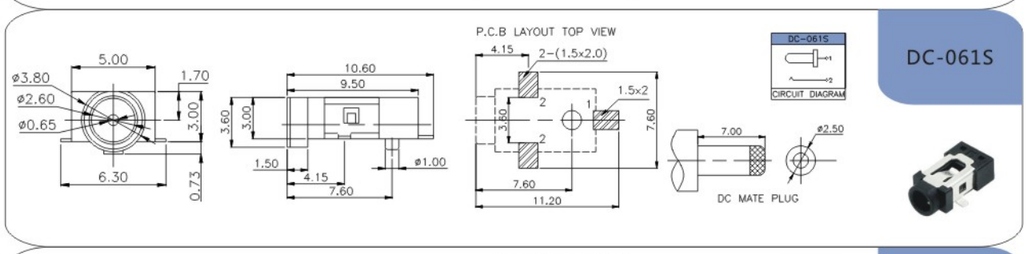

DC-062

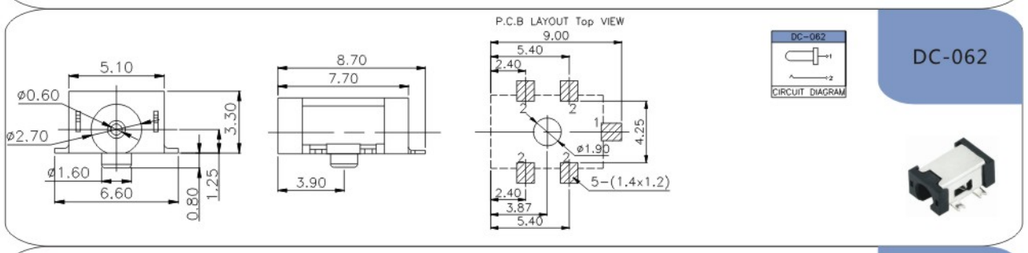

DC-062D

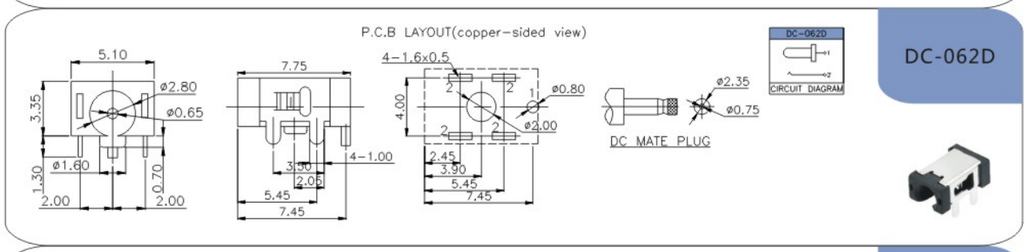

DC-063

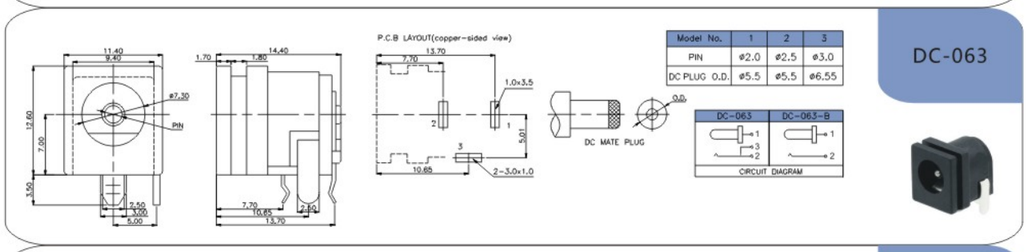

Model No.	1	2	3
PIN	ø2.0	ø2.5	ø3.0
DC PLUG O.D.	ø5.5	ø5.5	ø6.55

DC-066

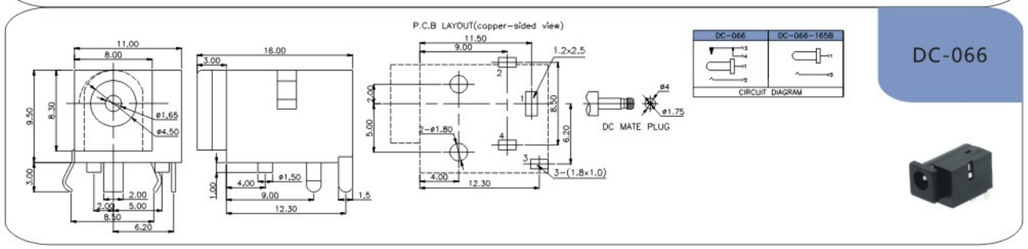

外型图 Dimensions

DC-068

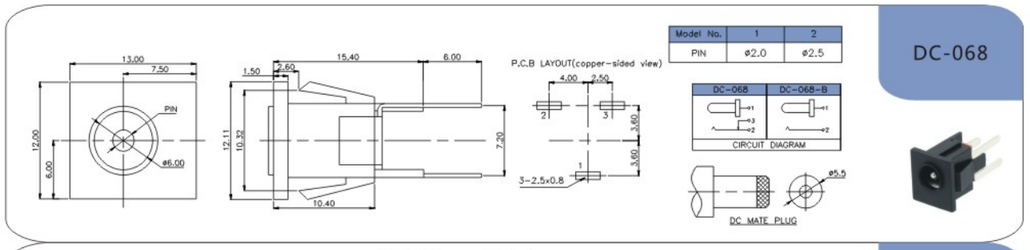

Model No.	1	2
PIN	ø2.0	ø2.5

DC-070

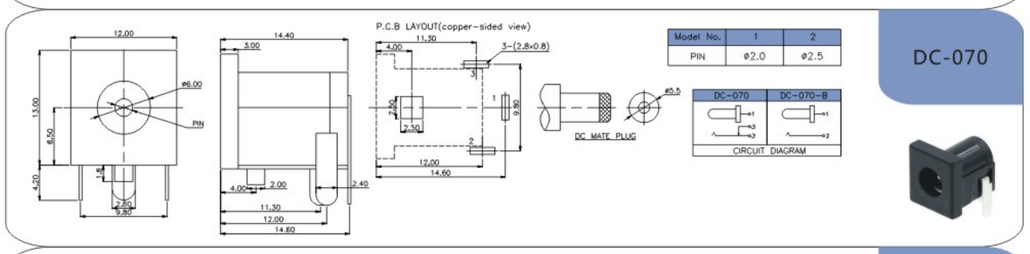

Model No.	1	2
PIN	ø2.0	ø2.5

DC-071

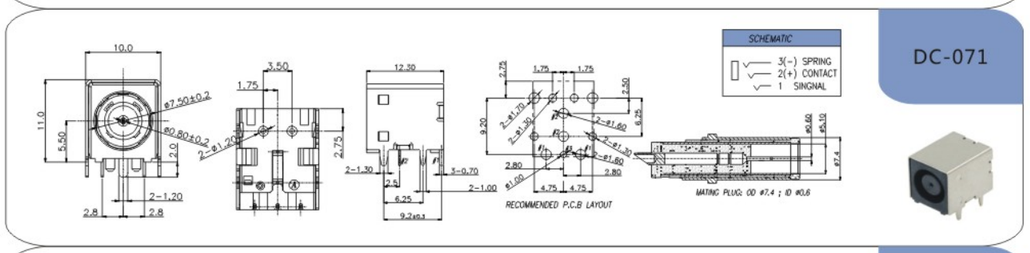

DC-072

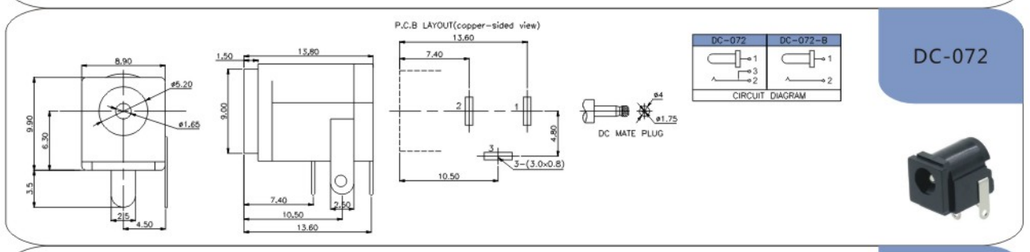

DC-080

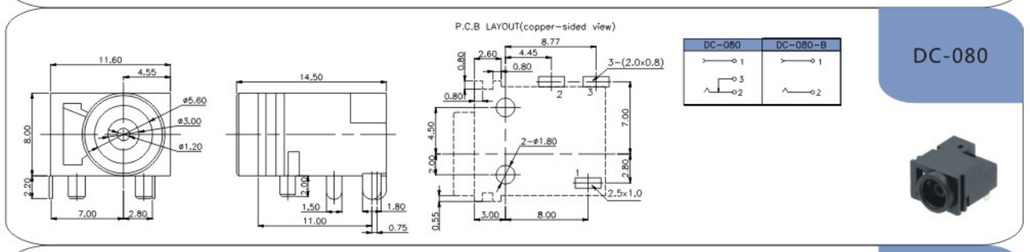

DC-083

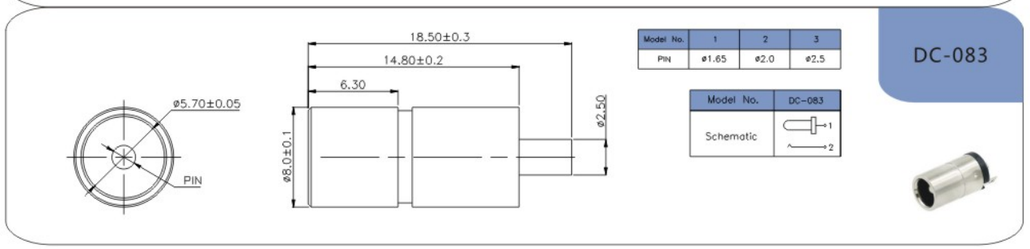

Model No.	1	2	3
PIN	ø1.65	ø2.0	ø2.5

Model No.	DC-083
Schematic	

DC-084

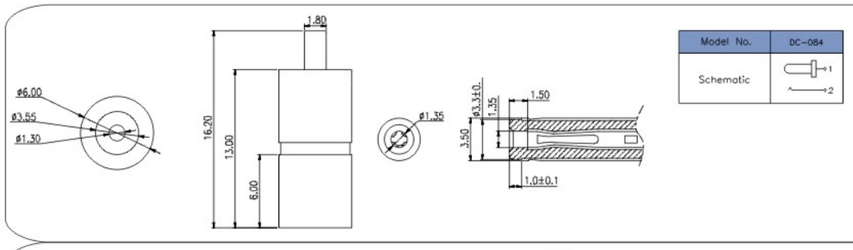

DC-085

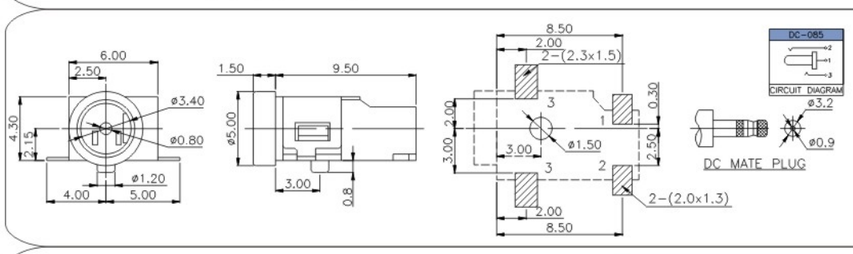

DC-087

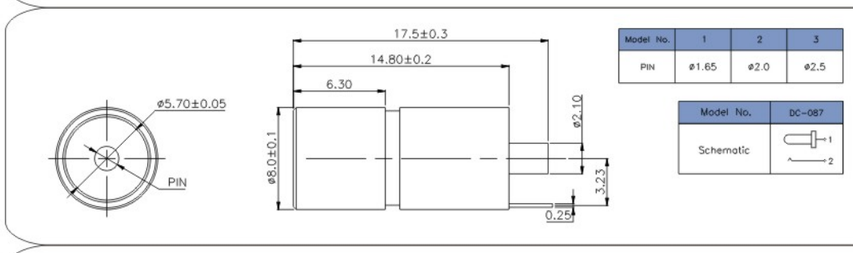

DC-088

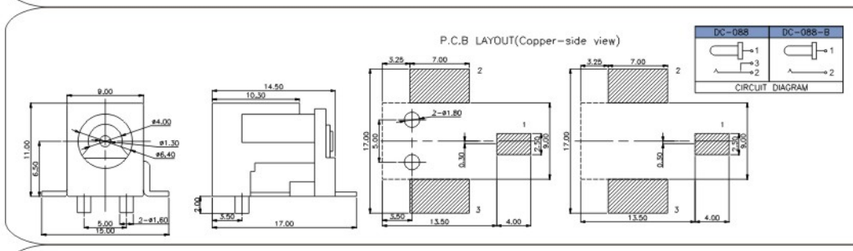

DC-088B

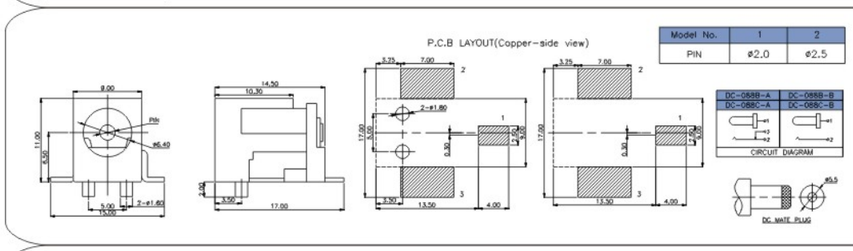

DC-092

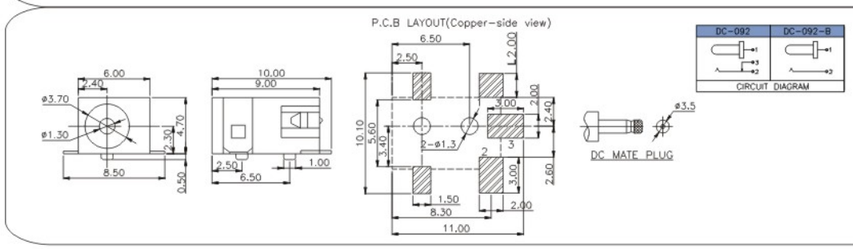

外型图 Dimensions

DC-098

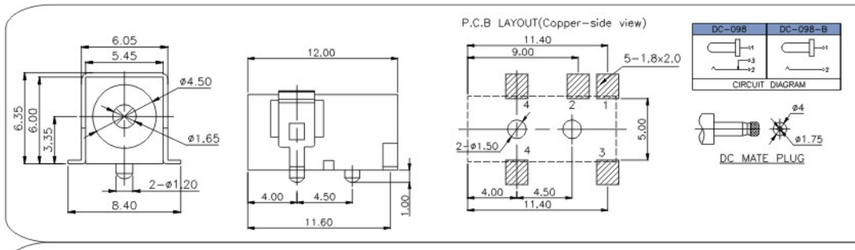

DC-099

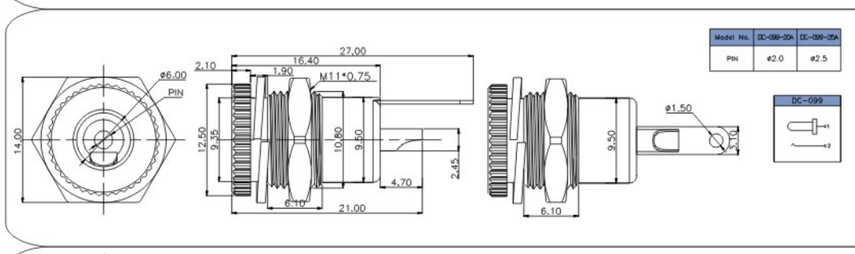

DC-118

IP-X6

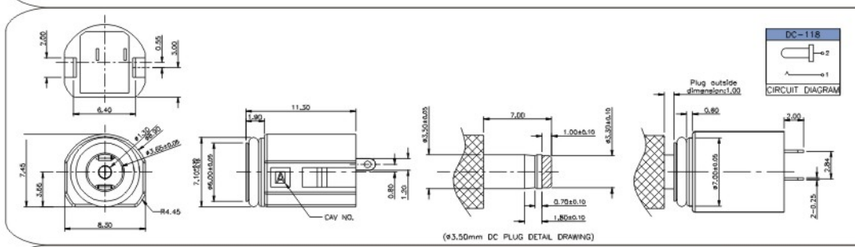

DC-125

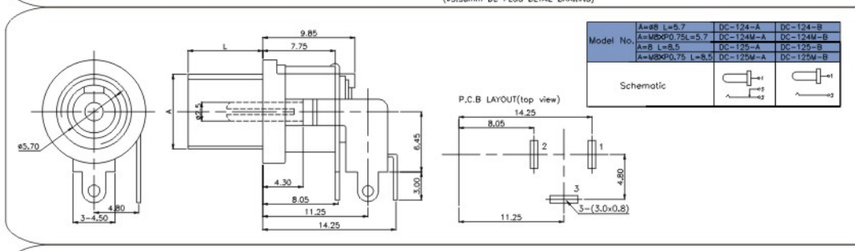

DC-182

DC 20V 7A

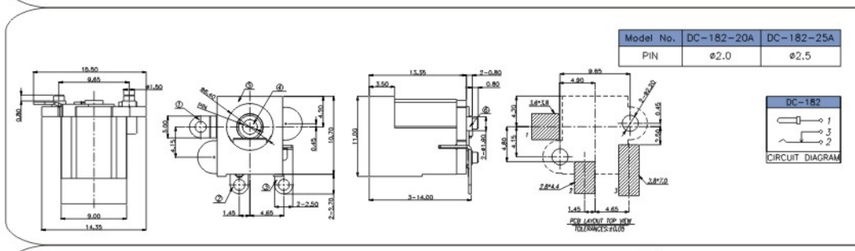

DC-183

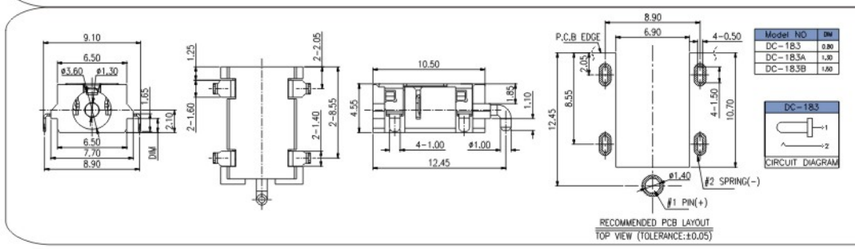

DC Jack DC插座

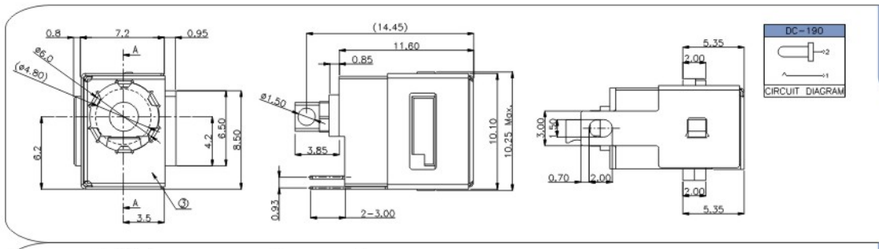

DC-190

DC 20V 7A

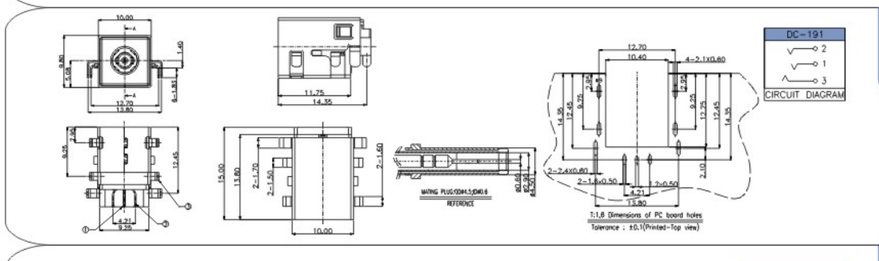

DC-191

DC 20V 7A

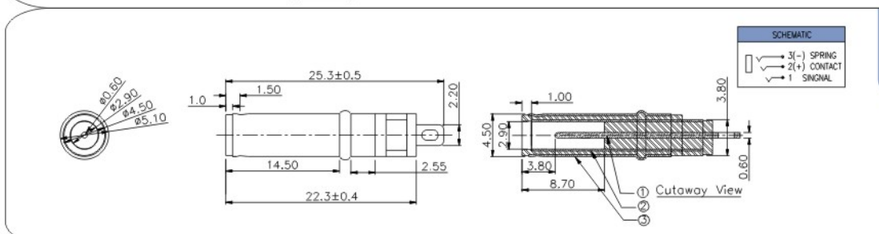

DC-191G

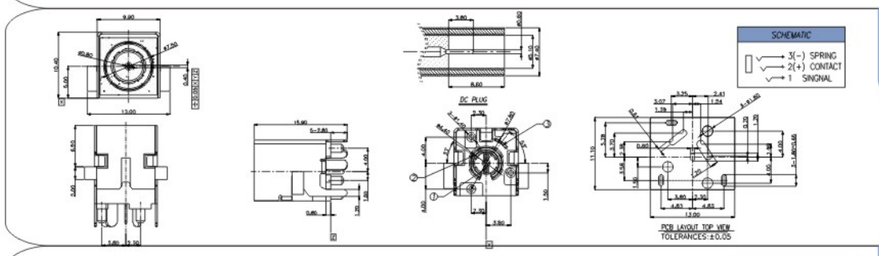

DC-192

DC 20V 7A

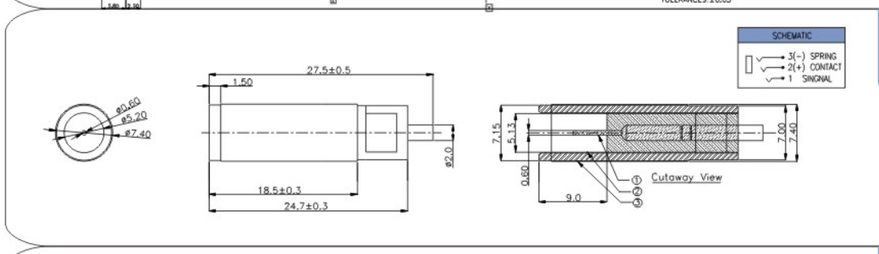

DC-192G

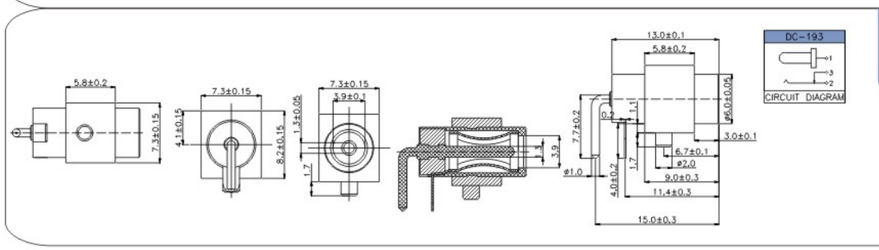

DC-193

接口母座 >>
Interface Base

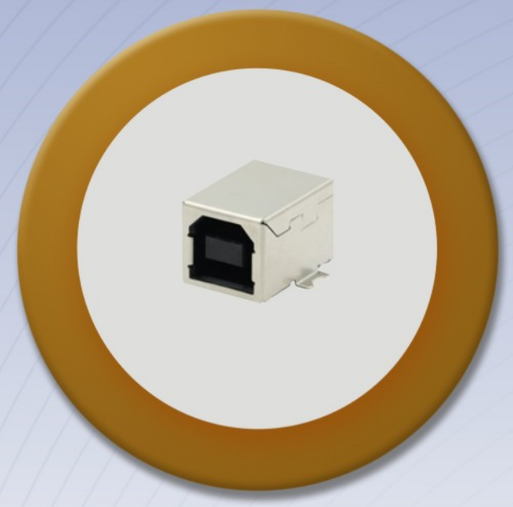

Interface Base 接口母座

特征 Features

- 具备 Type C/ Micro USB/ Mini USB公母座等多种类型接口设计。
  Equipped with Type C/ Micro USB/ Mini USB male and female seat and other types of interface design
- 安装形式有SMT/DIP/沉板式/夹式焊线式供选择供选择。
  The installation is available in SMT/DIP/ sunk plate/clamped wire type
- 接触端子采用弹性结构设计，保证良好的接触稳定性和长寿命要求。
  The contact terminal is designed with elastic structure to ensure good contact stability and long life
- 符合多种焊接设备参数的耐温要求。
  Meet the temperature resistance requirements of various welding equipment parameters

规格参数 Basic specfication parameter

电气特性 Electrical Characteristics	额定负荷 Rating	详见具体产品规格
	接触阻抗 Contact Resistance	30mΩ Max
	绝缘阻抗 Insulation Resistance	100mΩ Min
	绝缘耐电压 Withstand voltage	AC500V(50-60HZ) 1Minute
	电气寿命 Electrical Life	5,000Cycles
机械/可靠性特性 Mechanical/reliability Characteristics	操作力 Operating force range	详见具体产品规格
	机械寿命 Mechanical Life	5,000Cycles
	使用温度 Operating temperature range	-25°C+80°C
	使用湿度 Ambient humidity used	≤85%RH
	可焊性 Solder ability	245°C ± 5°C 3S ± 1S
	耐焊接热 Withstand Soldering temperature	260°C ± 5°C 3S ± 1S

焊接条件 Welding conditions

- 手工焊 Hand soldering
  使用30瓦烙铁，烙铁尖端温度不超过350℃，焊接时间3S。
  Use a soldering iron of 30 watts, Controlled at 350°C approximately 3 seconds while solder applying
- 波峰焊/回流焊Wave soldering/Reflow Soldering
  峰值温度不超过260℃，焊接时间不超过5S（焊接温度曲线参考如下）。
  The peak temperature of the wave oven should be set to 260°C max.Condition for soldering Temperature Profile

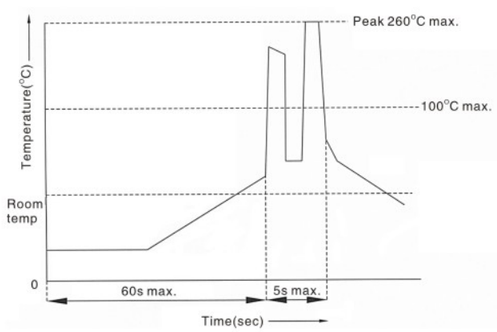

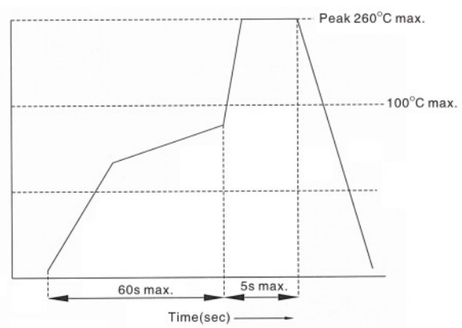

外型图 Dimensions

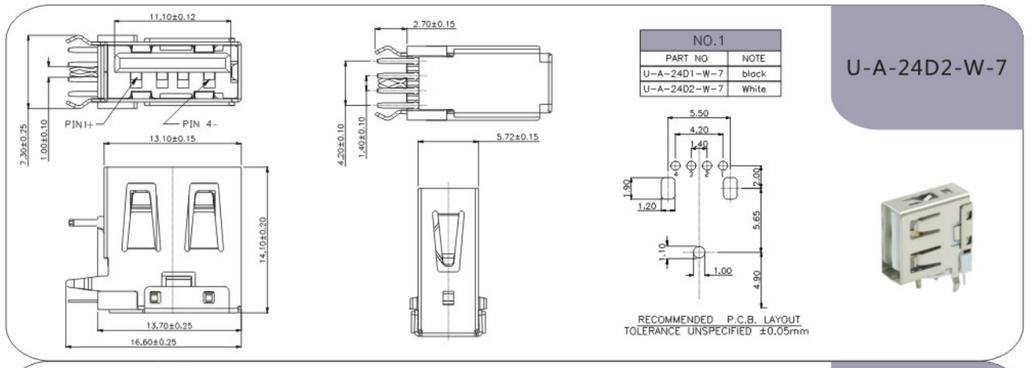

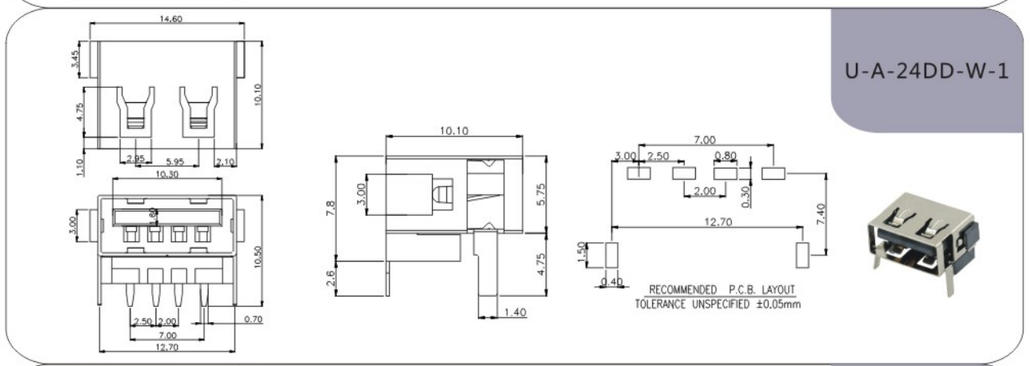

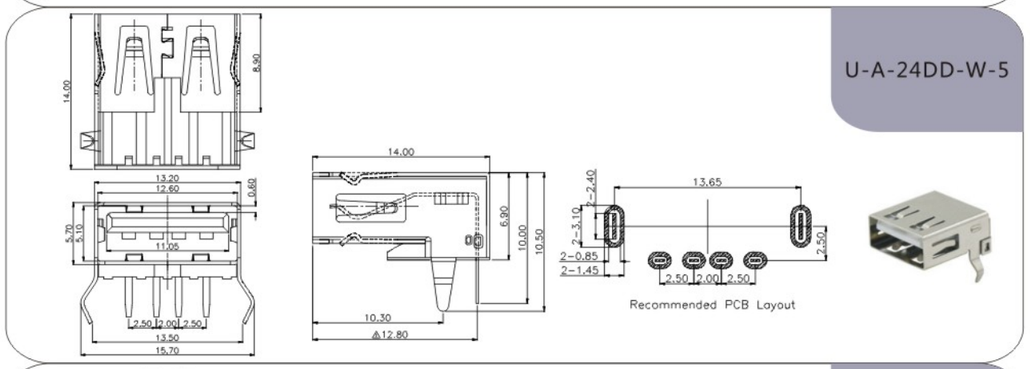

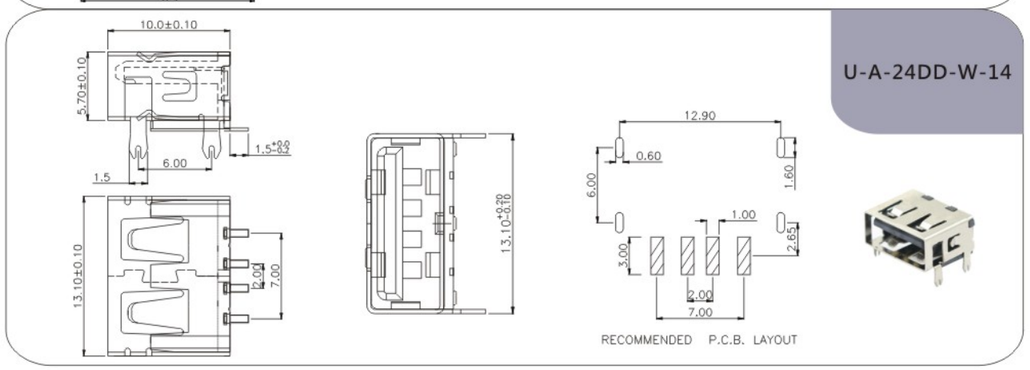

U-A-24DD-W-18

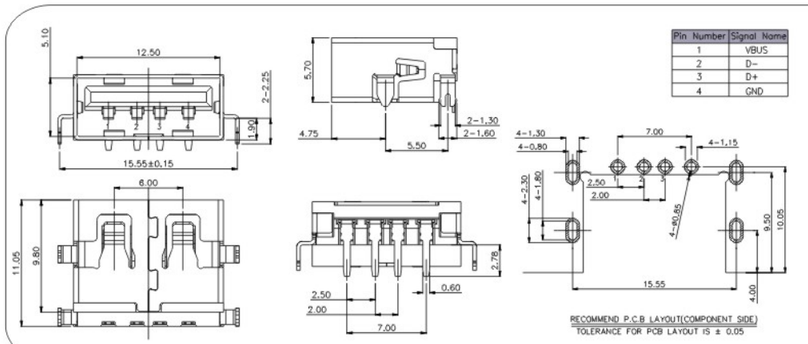

Pin Number	Signal Name
1	VBUS
2	D-
3	D+
4	GND

U-A-24DS-W-1

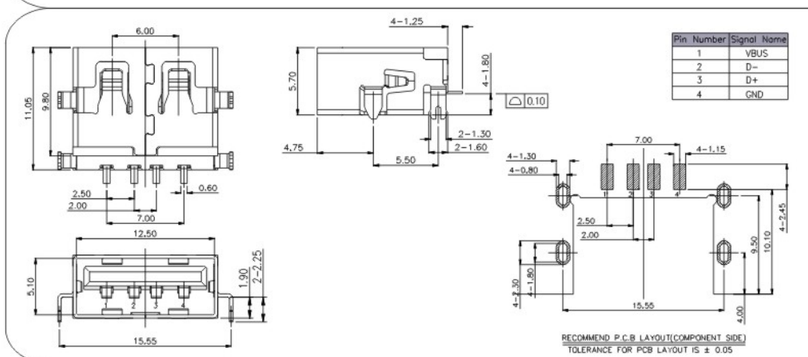

Pin Number	Signal Name
1	VBUS
2	D-
3	D+
4	GND

U-A-24SD-W-1

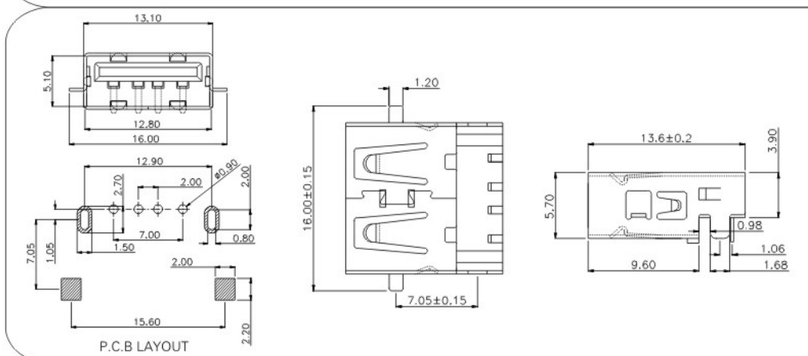

U-A-24SD-W-2

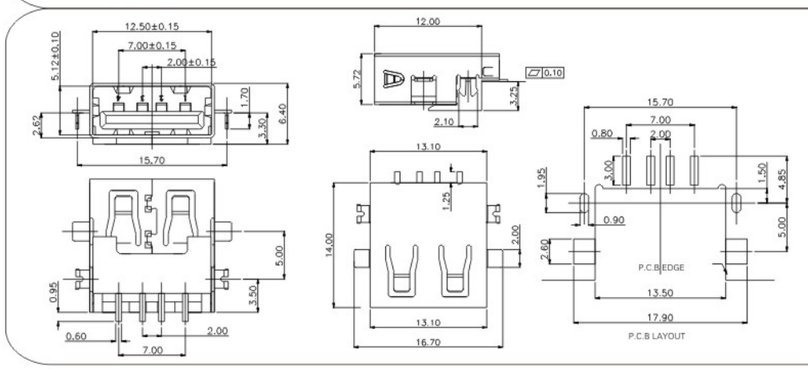

外型图 Dimensions

U-A-24DD-Y-1

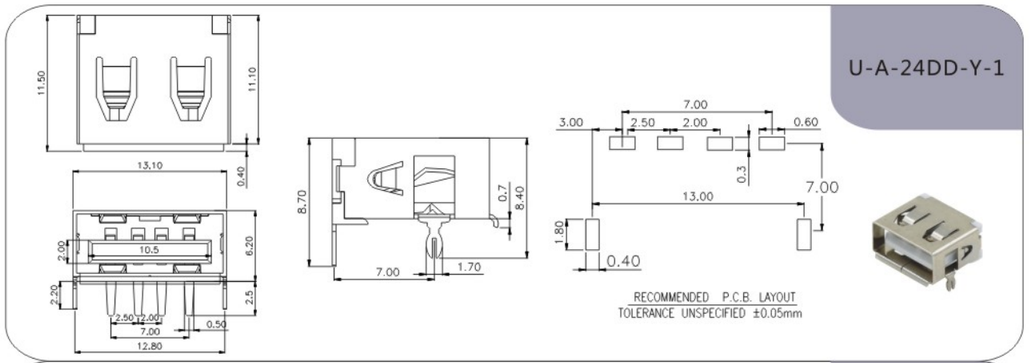

U-A-24DD-Y-2

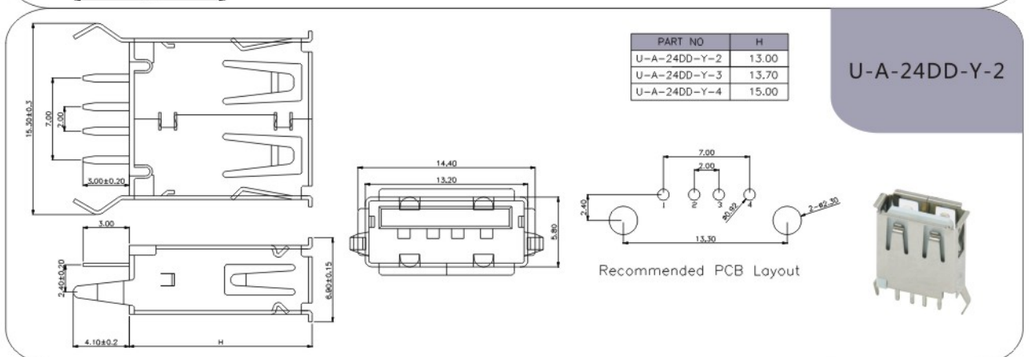

PART NO	H
U-A-24DD-Y-2	13.00
U-A-24DD-Y-3	13.70
U-A-24DD-Y-4	15.00

U-A-24DD-Y-6

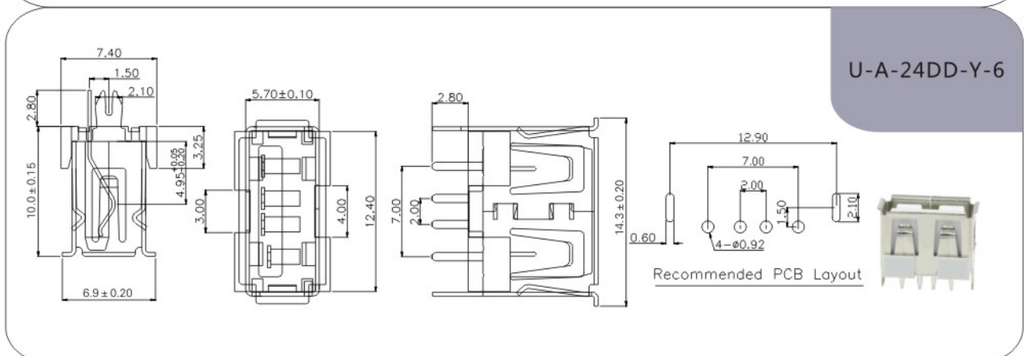

U-A-24DD-Y-11

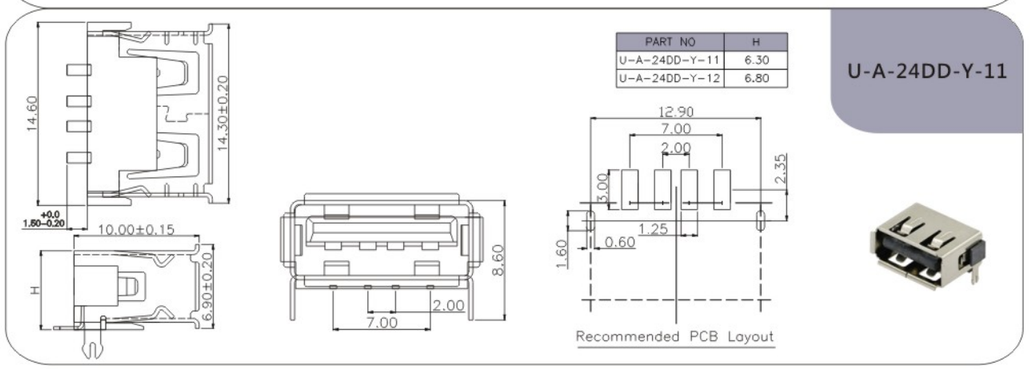

PART NO	H
U-A-24DD-Y-11	6.30
U-A-24DD-Y-12	6.80

U-A-24DD-Y-15

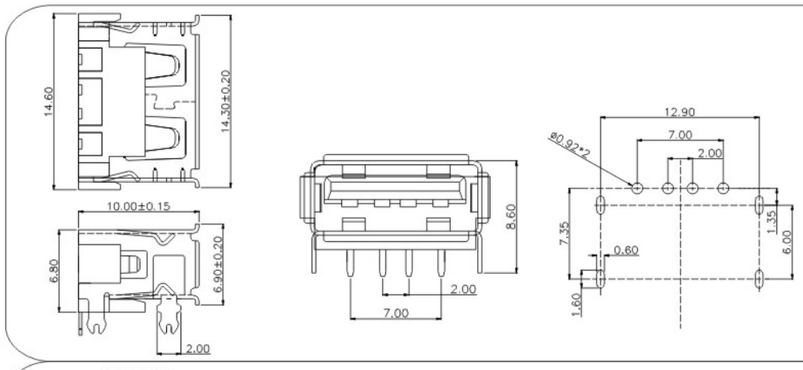

U-A-24DS-Y-1

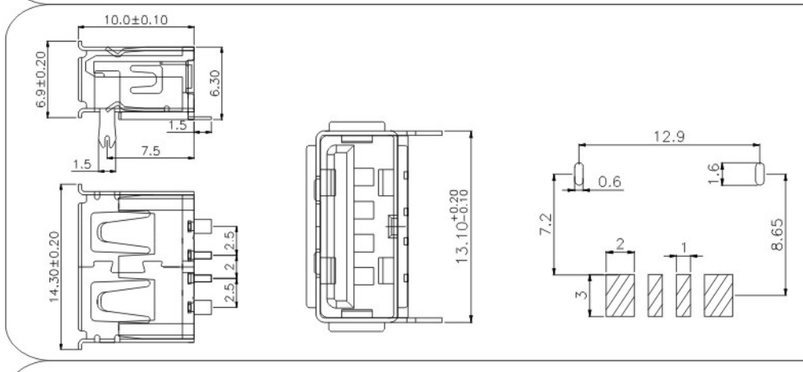

U-A-25DD-W-1

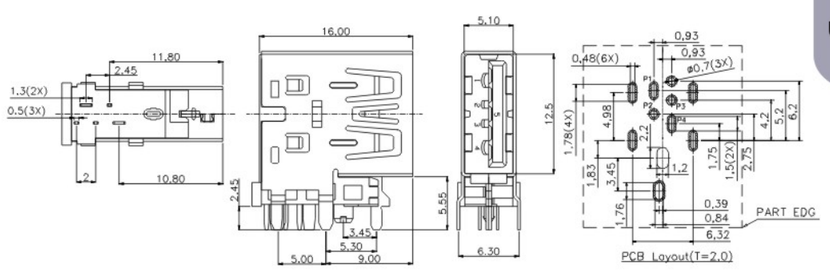

U-A-28D1-W-2

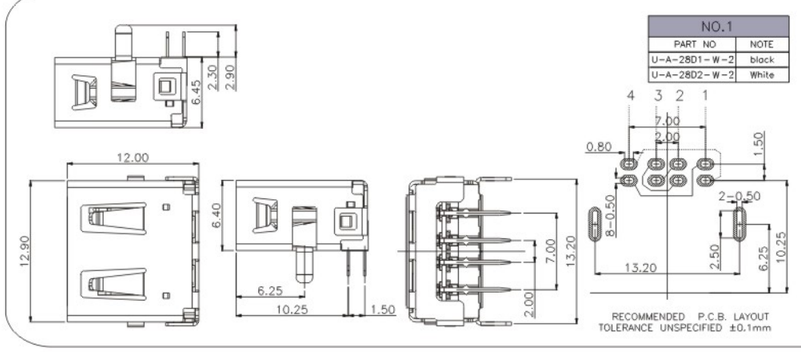

外型图 Dimensions

U-A-28D2-W-1

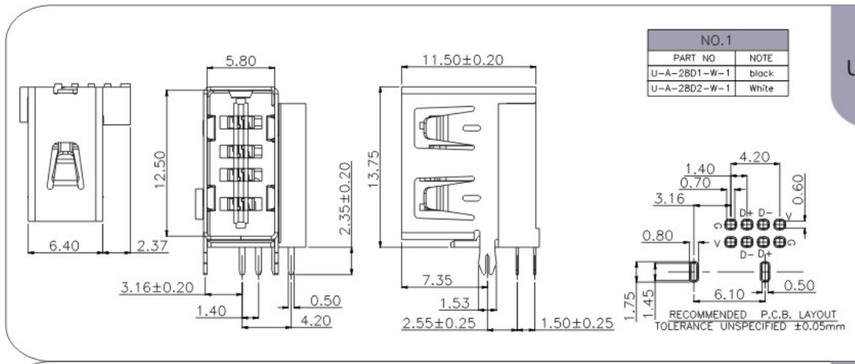

U-A-28D2-W-3

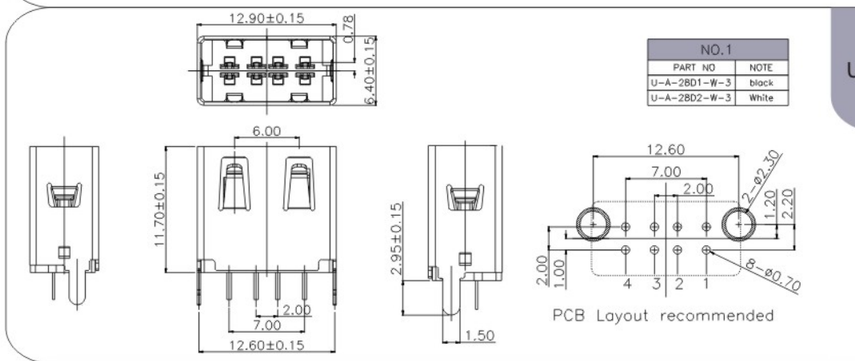

U-A-28DD-Y-1

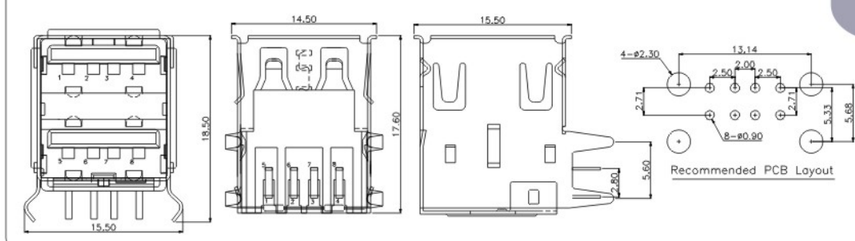

U-A-39DD-W-1

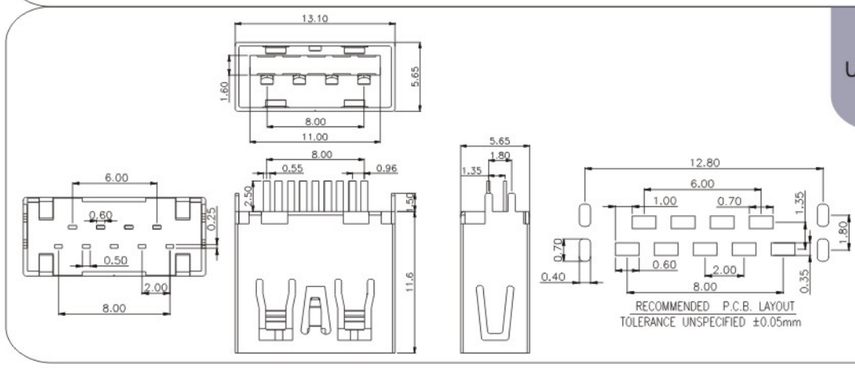

U-A-39DD-W-2

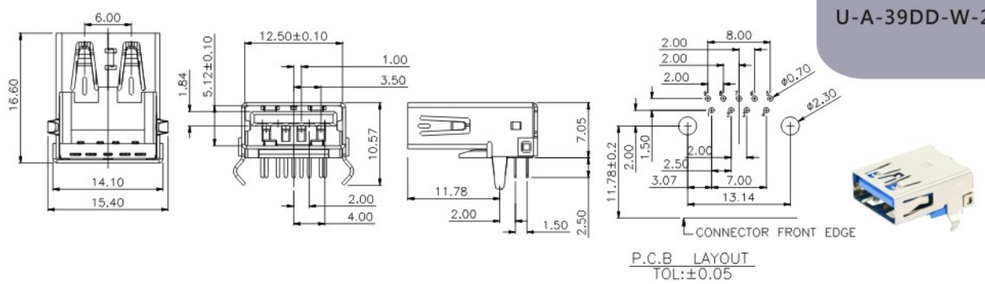

U-A-39DD-W-3

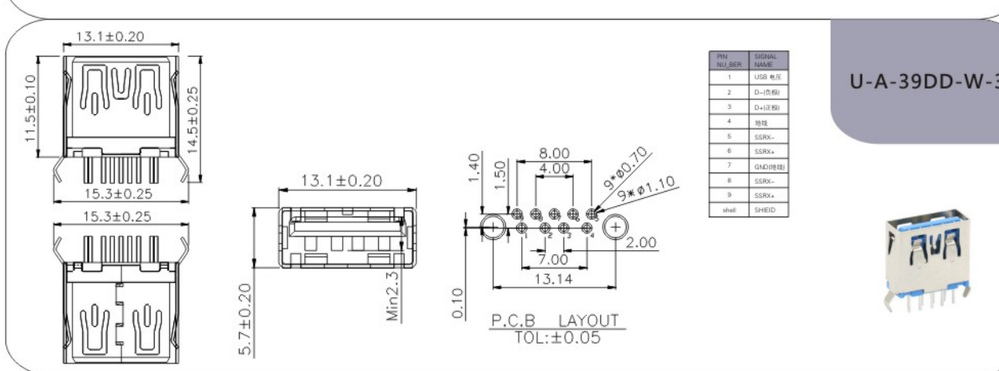

PIN NUMBER	SIGNAL NAME
1	USB 电压
2	D-(负极)
3	D+(正极)
4	地线
5	SSRX-
6	SSRX+
7	GND(接地)
8	SSRX-
9	SSRX+
shell	SHIEID

U-A-39DD-Y-1

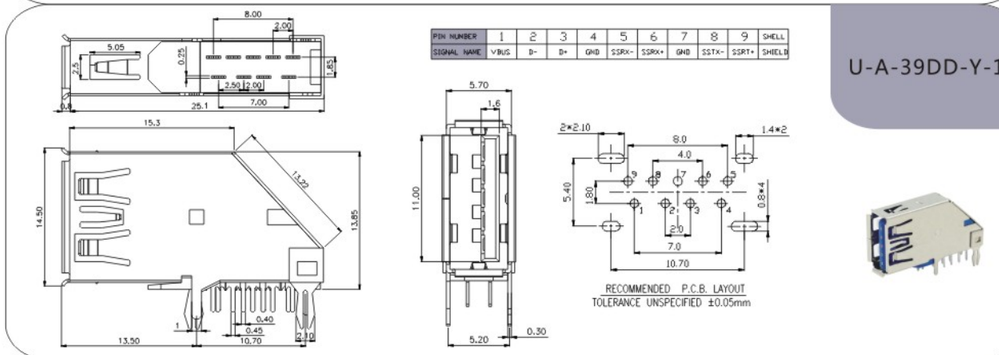

PIN NUMBER	1	2	3	4	5	6	7	8	9	SHELL
SIGNAL NAME	VBUS	D-	D+	GND	SSRX-	SSRX+	GND	SSTX-	SSRT+	SHIELD

U-A-39DD-Y-2

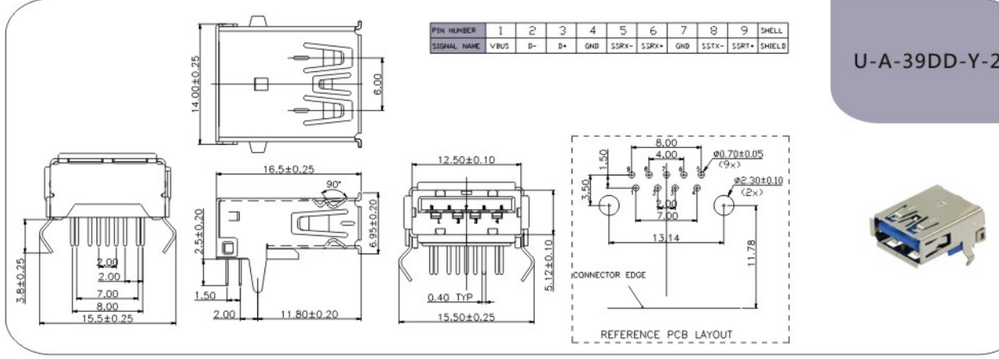

PIN NUMBER	1	2	3	4	5	6	7	8	9	SHELL
SIGNAL NAME	VBUS	D-	D+	GND	SSRX-	SSRX+	GND	SSTX-	SSRT+	SHIELD

外型图 Dimensions

U-A-39DS-Y-1

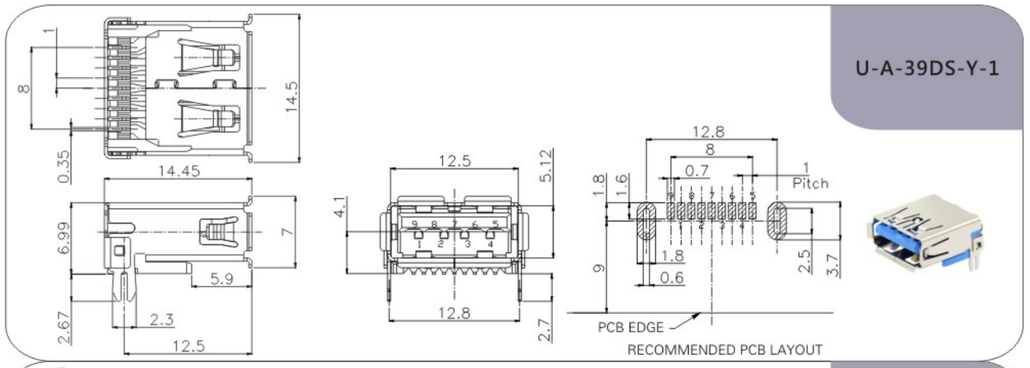

U-A-39SS-Y-1

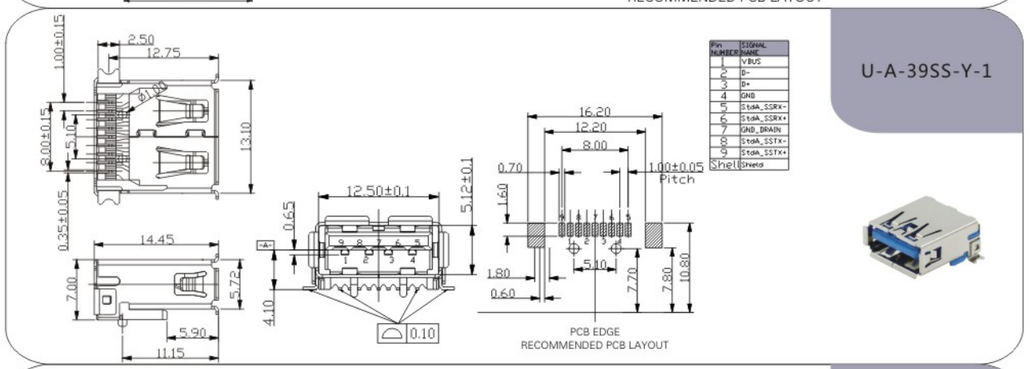

Pin NUMBER	SIGNAL NAME
1	VBUS
2	D-
3	D+
4	GND
5	StdA_SSRX-
6	StdA_SSRX+
7	GND_DRAIN
8	StdA_SSTX-
9	StdA_SSTX+
Shell	Shield

U-B-M4DD-W-1

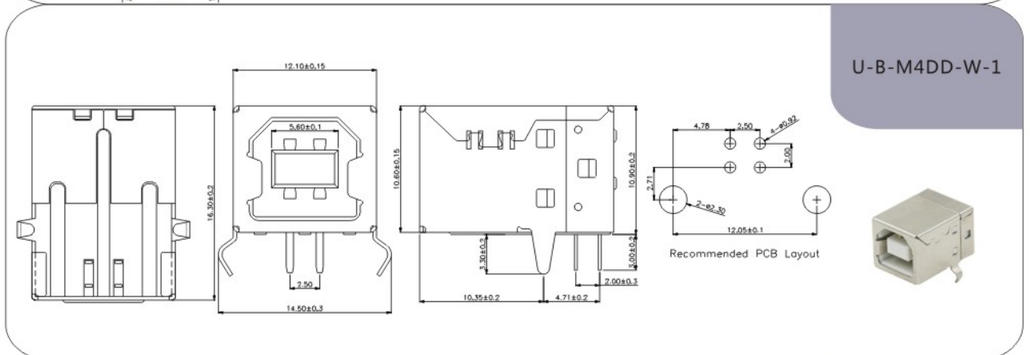

U-B-M4DD-W-2

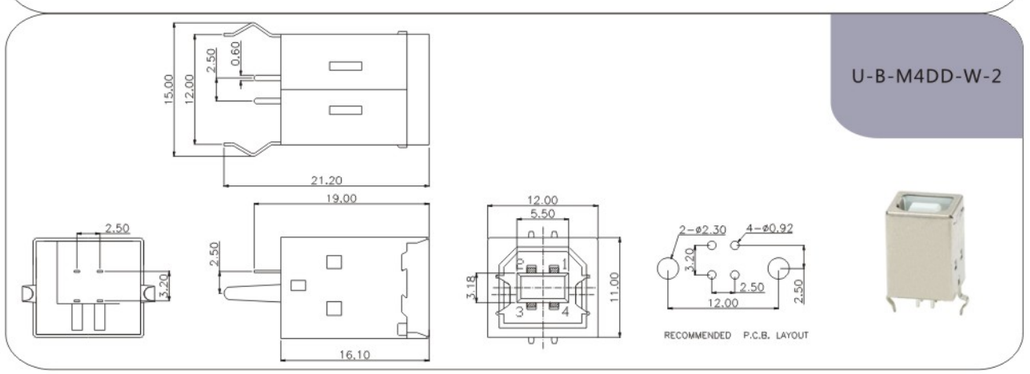

U-B-M4SS-W-1

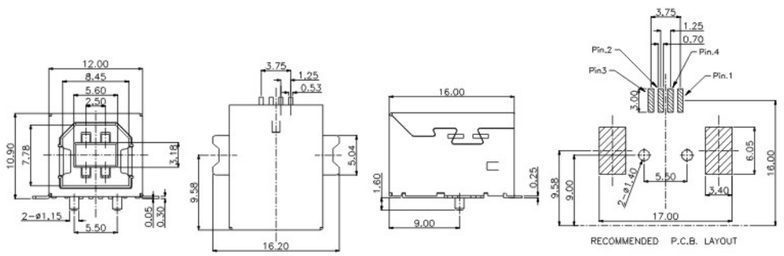

U-B-M4SS-W-2

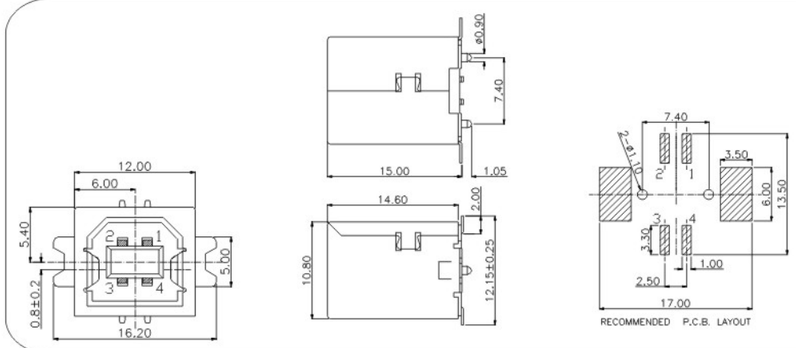

U-B-M9DD-W-1

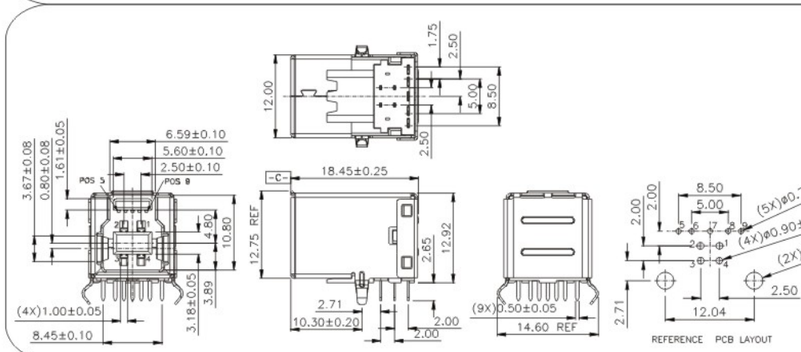

U-C-M5DD-W-3

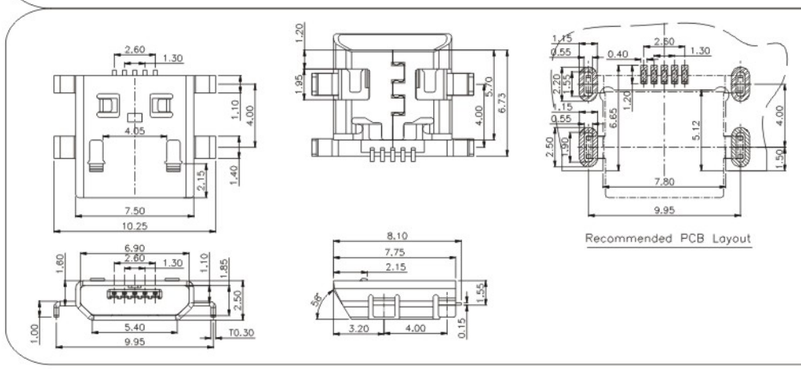

外型图 Dimensions

U-C-M5DD-Y-1

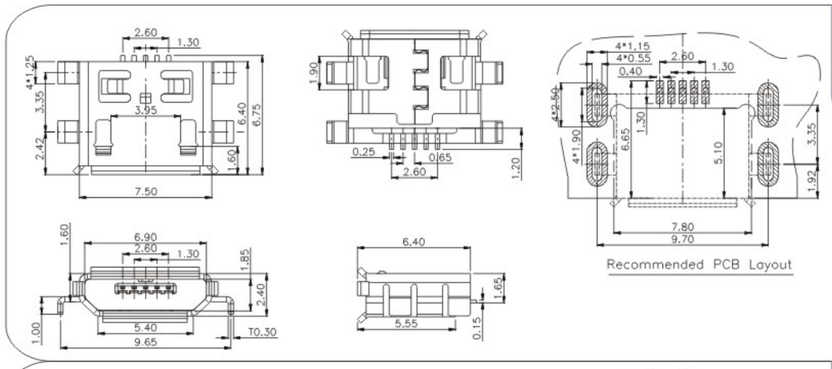

U-C-M5SS-Y-1

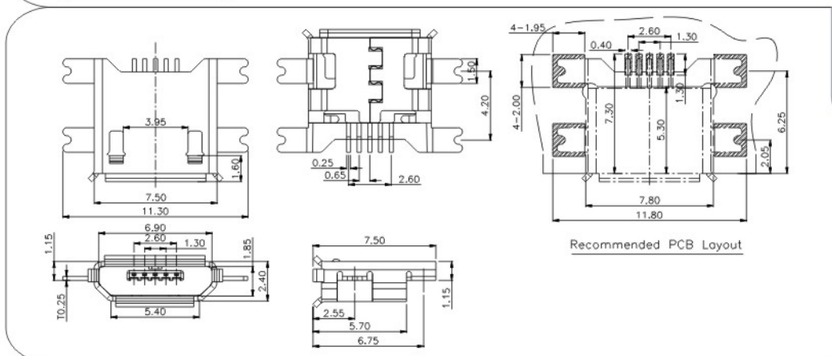

U-C-M5SW-Y-1

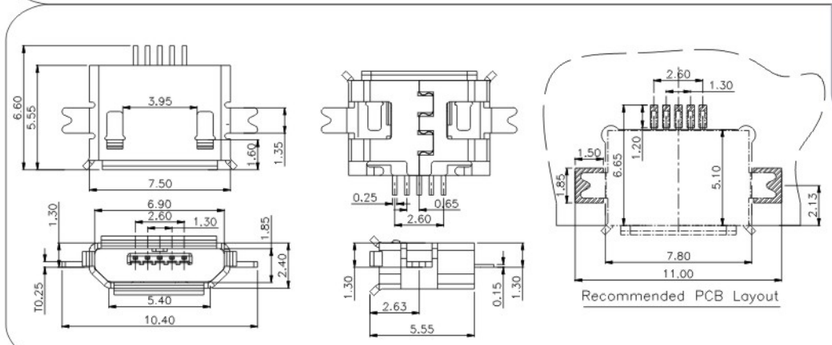

U-C-19DD-W-1

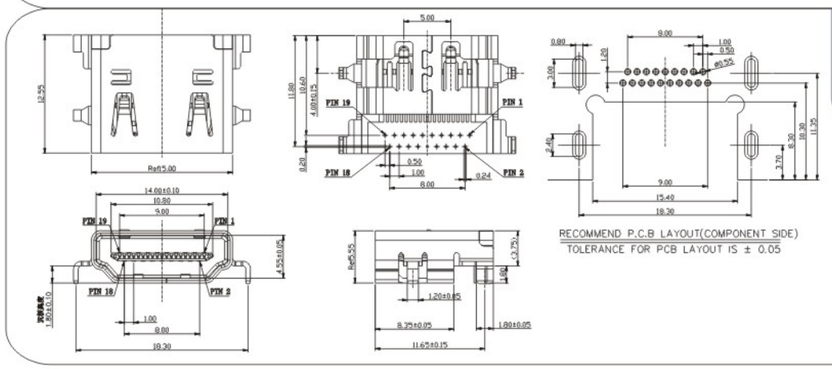

U-C-19SS-W-1

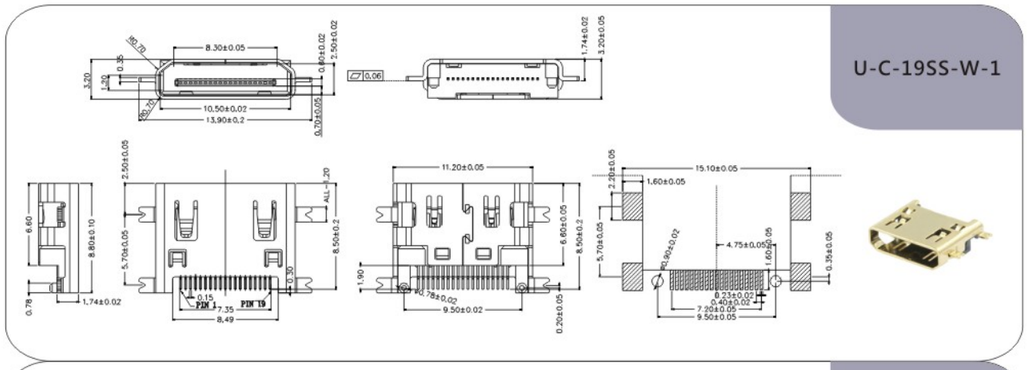

U-D-M5DD-W-1

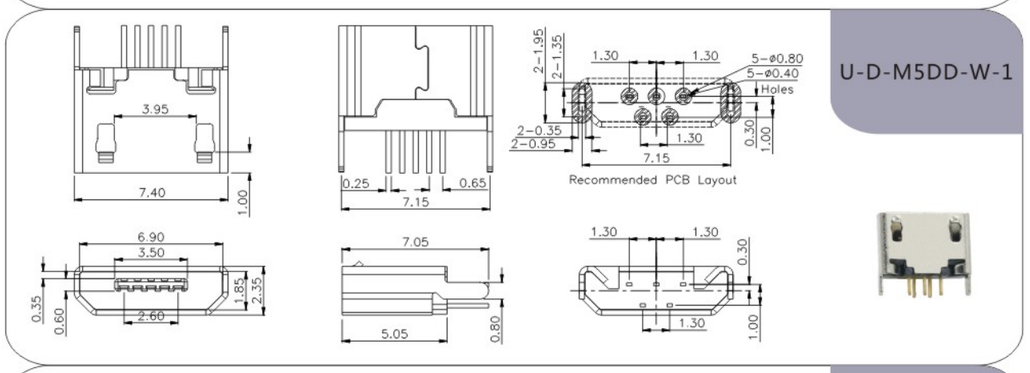

U-D-M5DS-W-4

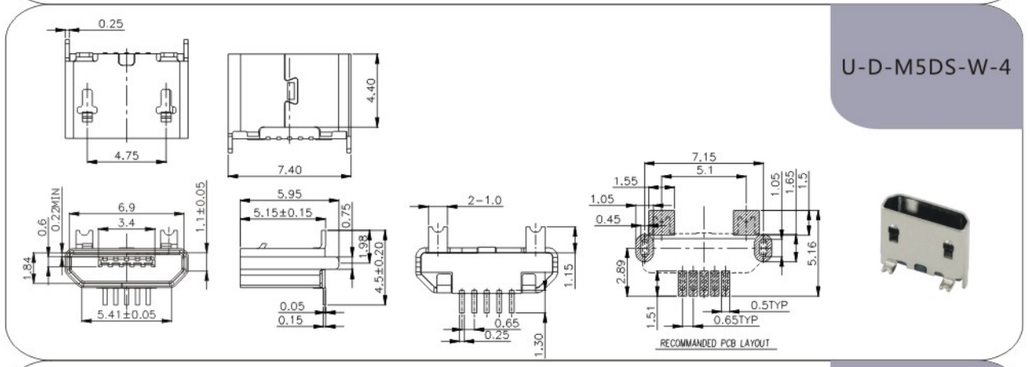

U-D-M5DD-Y-3

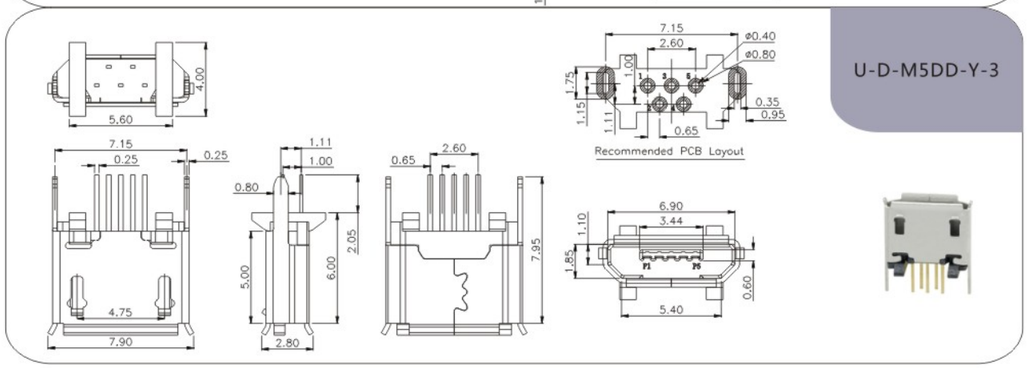

外型图 Dimensions

U-D-M5DS-Y-2

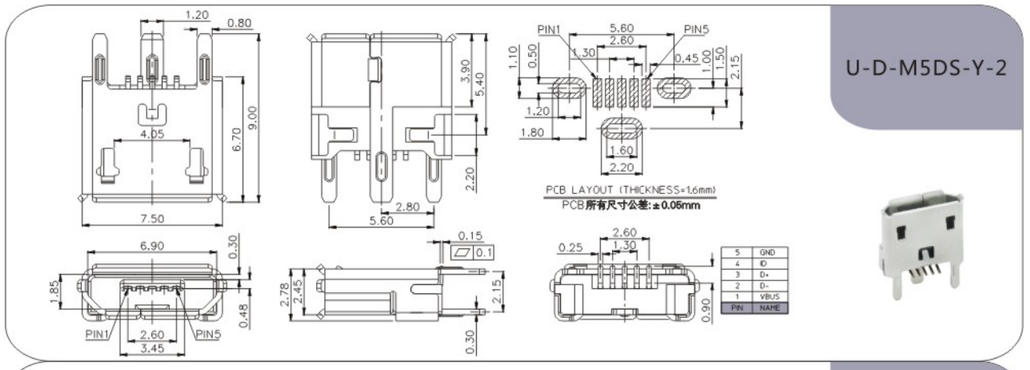

U-D-M5DS-Y-3

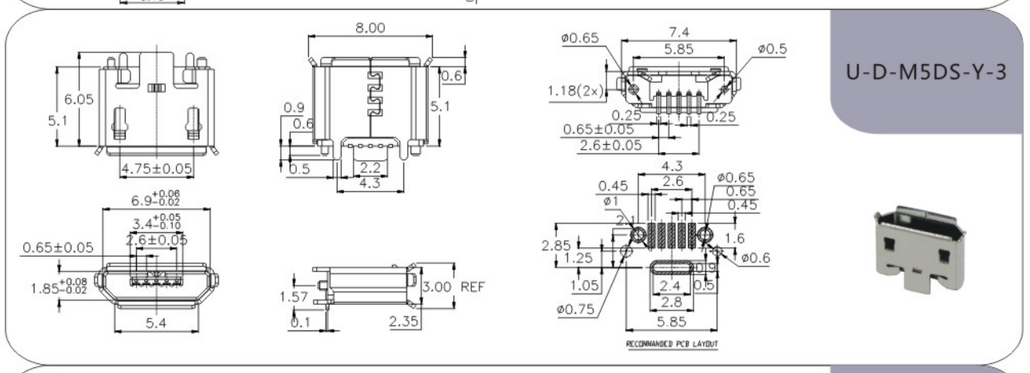

U-E-M5DD-W-1

IPX4

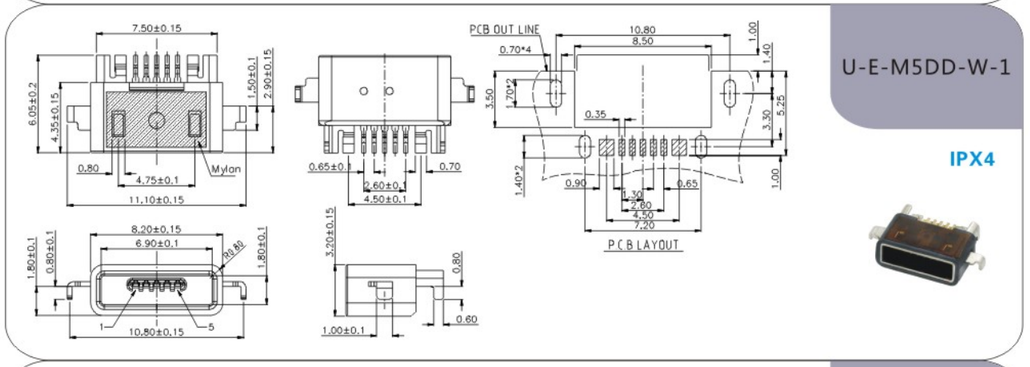

U-E-M5DD-W-2

IPX6

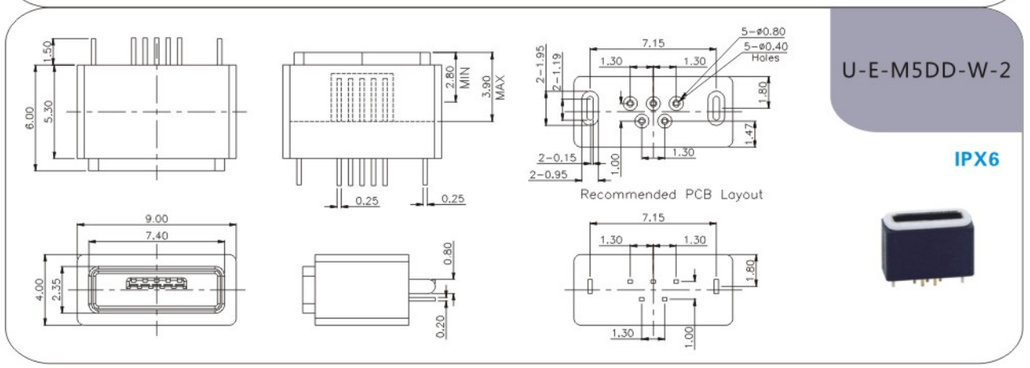

U-E-M5DD-W-3

IP-X7

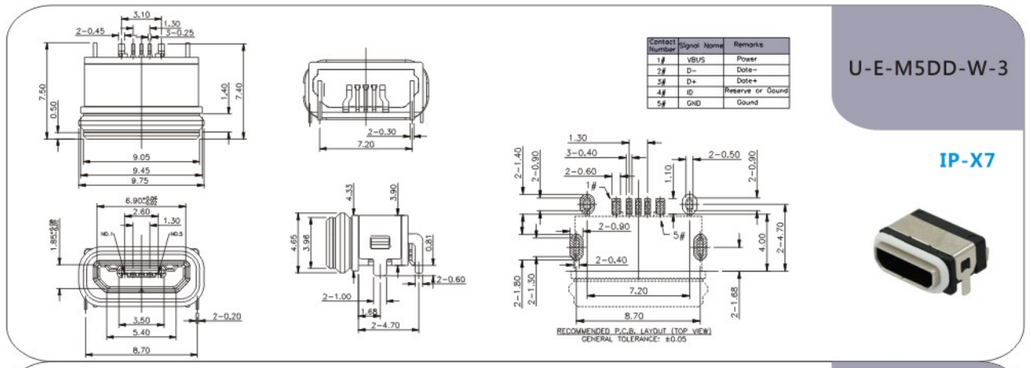

Contact Number	Signal Name	Remarks
1#	VBUS	Power
2#	D-	Date-
3#	D+	Date+
4#	ID	Reserve or Gound
5#	GND	Gound

U-E-M5DD-W-4

IP-X7

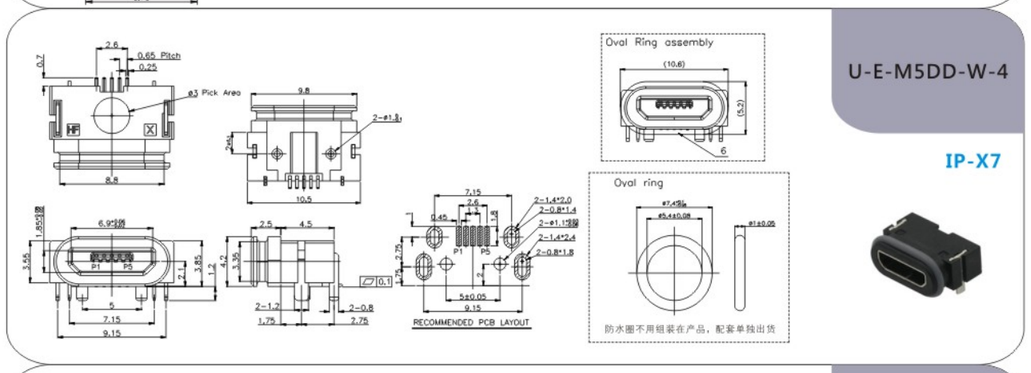

U-E-M5DW-W-1

IP-X6

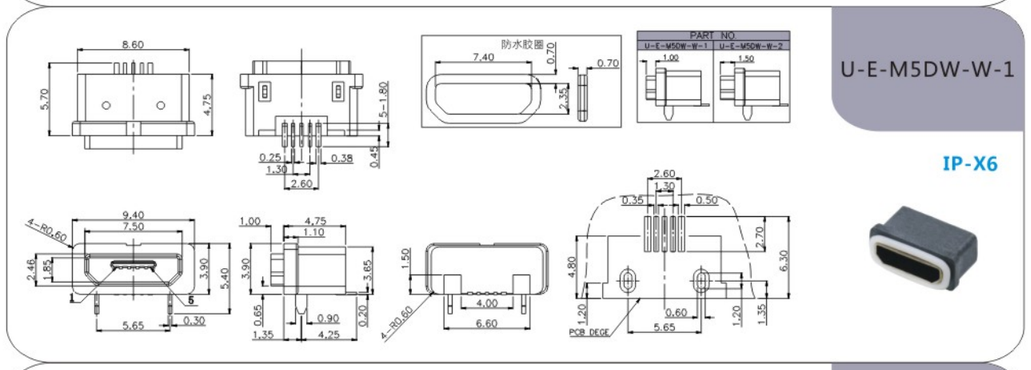

U-E-M5DS-W-3

IP-X7

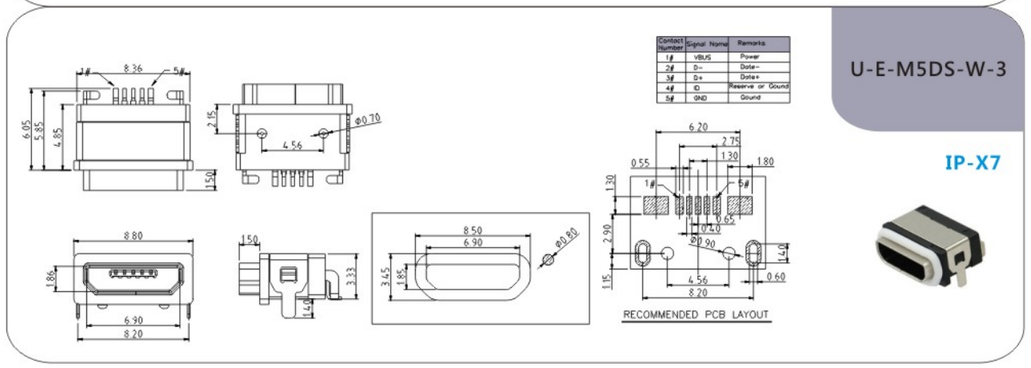

Contact Number	Signal Name	Remarks
1#	VBUS	Power
2#	D-	Date-
3#	D+	Date+
4#	ID	Reserve or Gound
5#	GND	Gound

外型图 Dimensions

U-E-M5SS-W-1

IP-X7

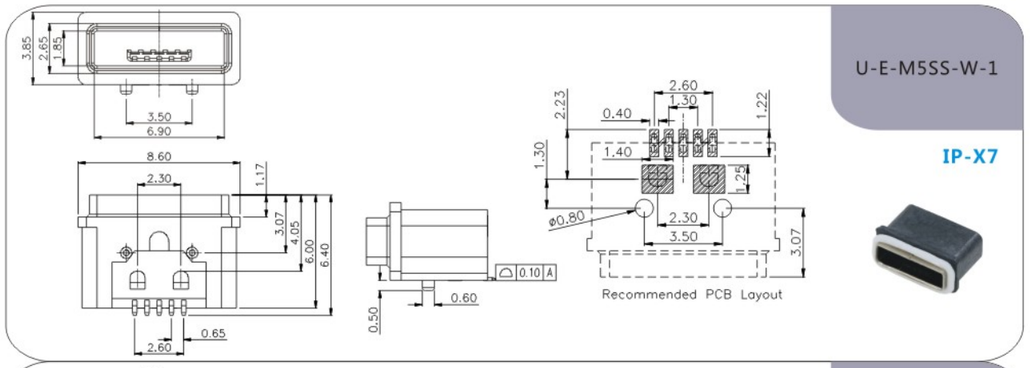

U-E-M5SS-W-2

IP-X7

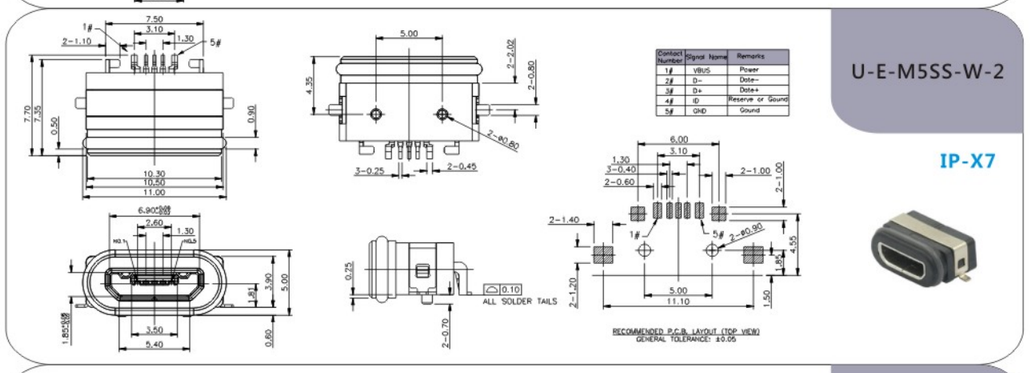

Contact Number	Signal Name	Remarks
1#	VBUS	Power
2#	D-	Date-
3#	D+	Date+
4#	ID	Reserve or Gound
5#	GND	Gound

U-E-M5SS-Y-1

IP-X7

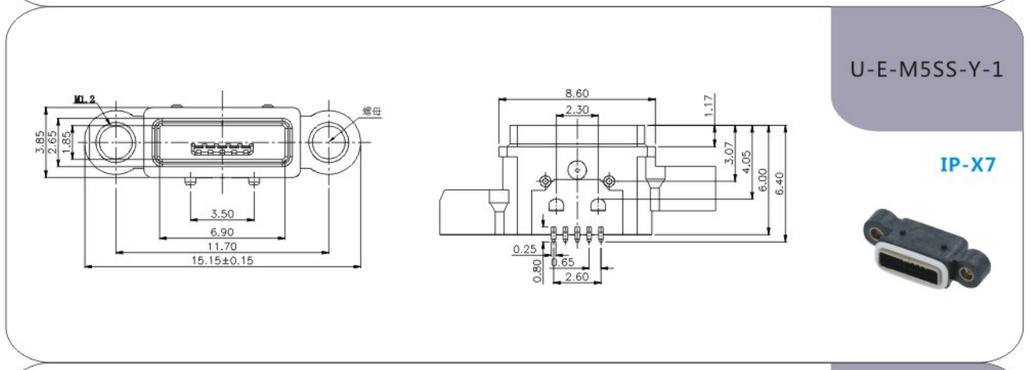

U-E-M5SS-Y-2

IP-X7

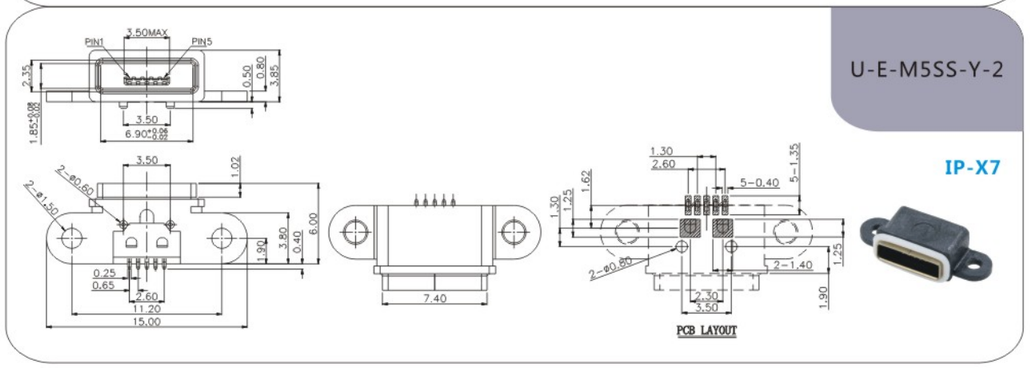

U-F-M5WW-W-1

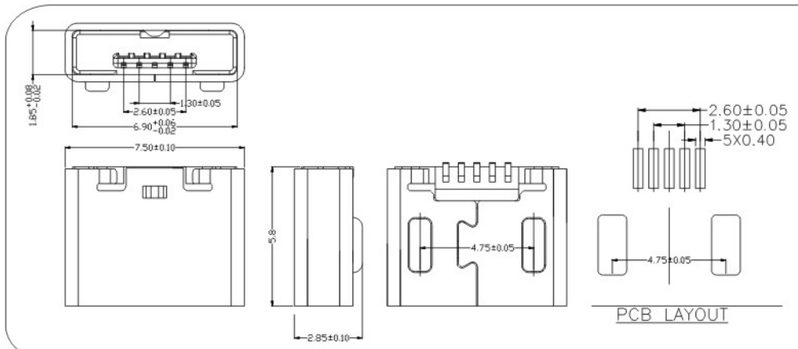

U-F-M5SW-W-1

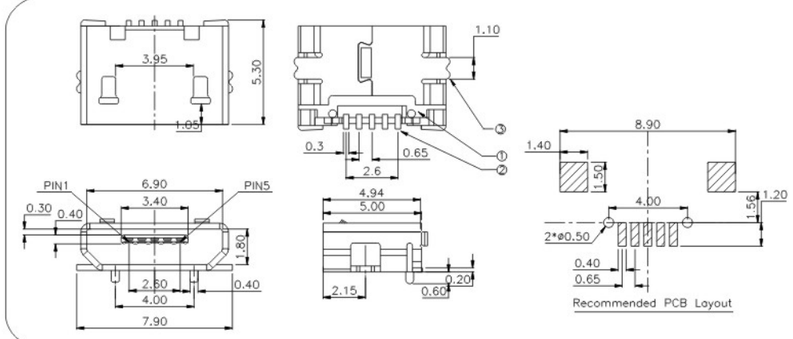

U-F-M5DS-W-8

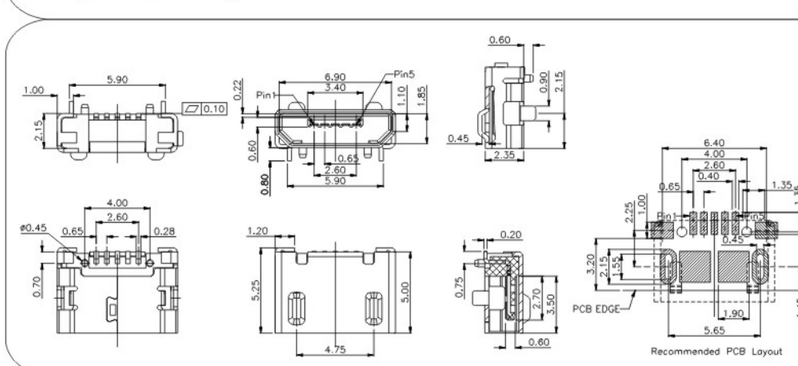

U-F-F5DD-Y-L2

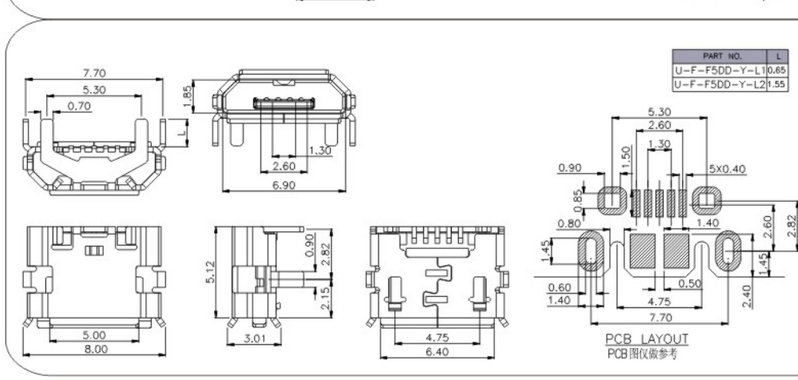

外型图 Dimensions

U-F-M5DD-Y-1

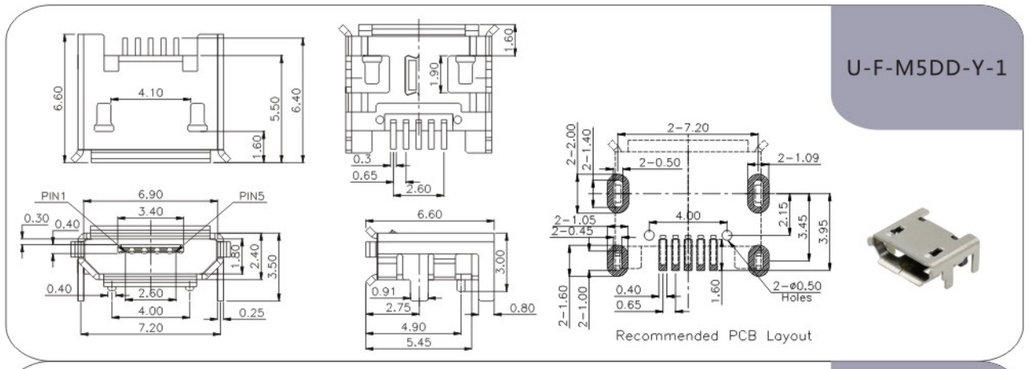

U-F-M5DD-Y-3

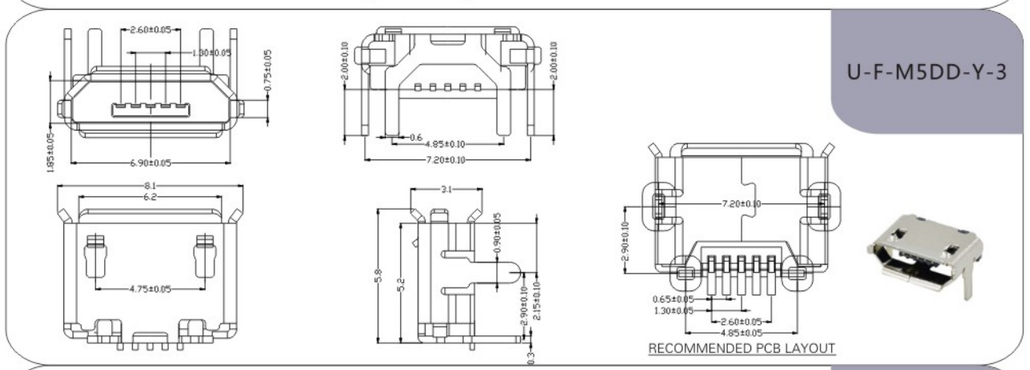

U-F-M5DD-Y-L

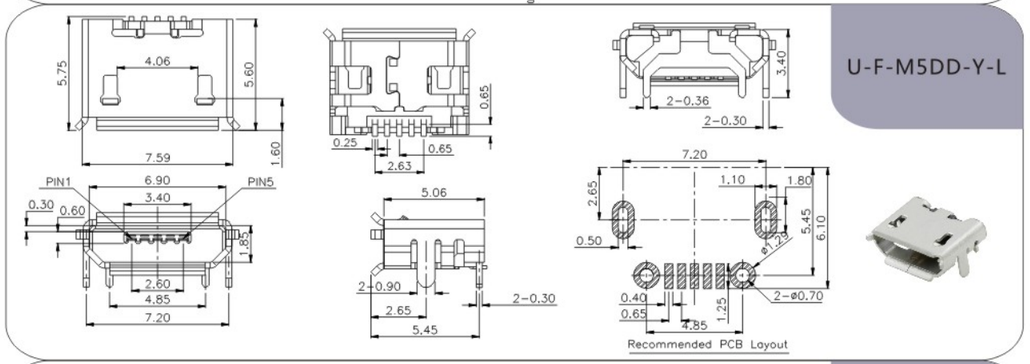

U-F-M5SW-Y-3

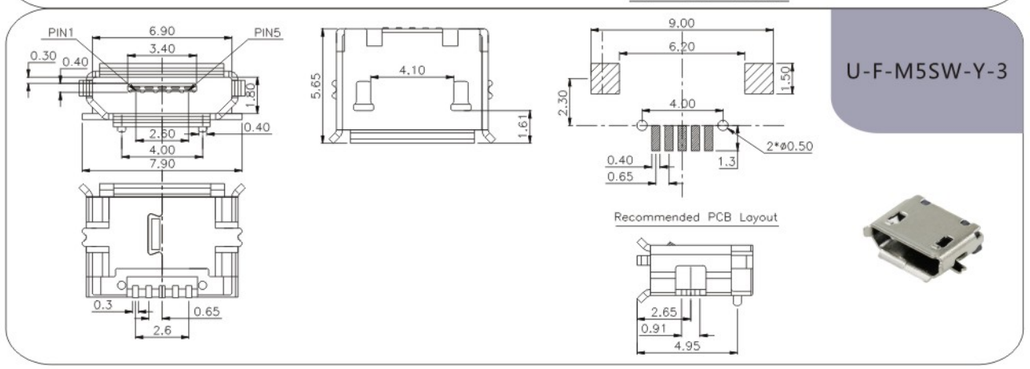

U-F-M5DS-Y-1

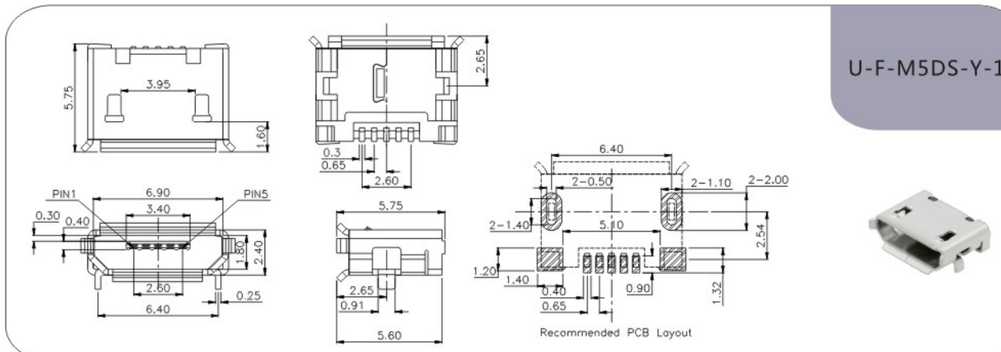

U-F-M5DW-Y-3

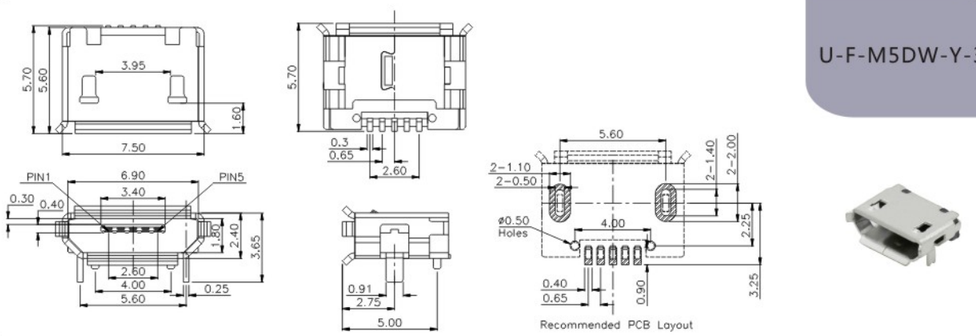

U-F-M5DS-Y-10

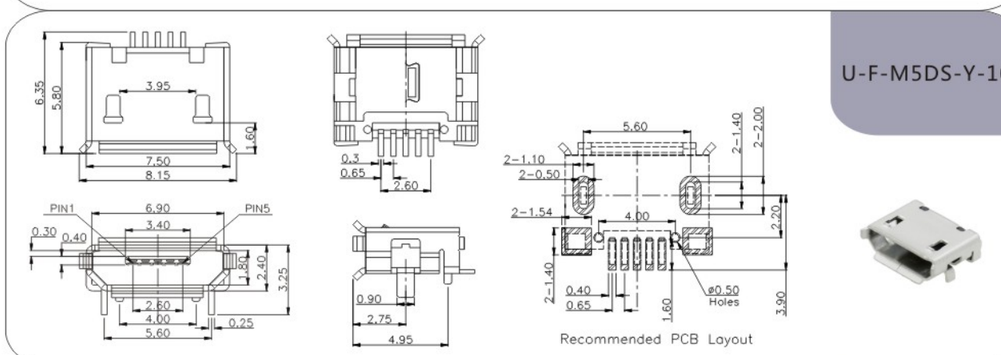

U-G-04WS-W-01

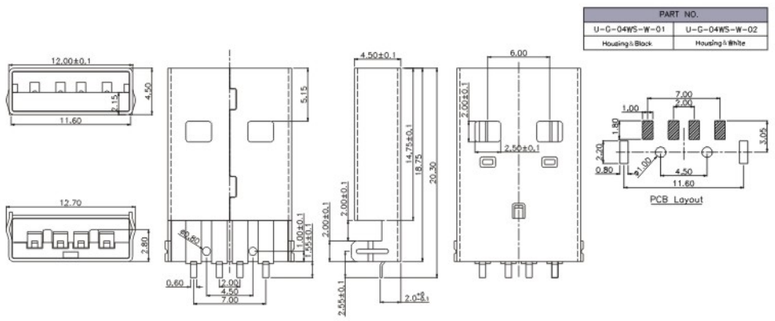

外型图 Dimensions

U-G-04WS-W-03

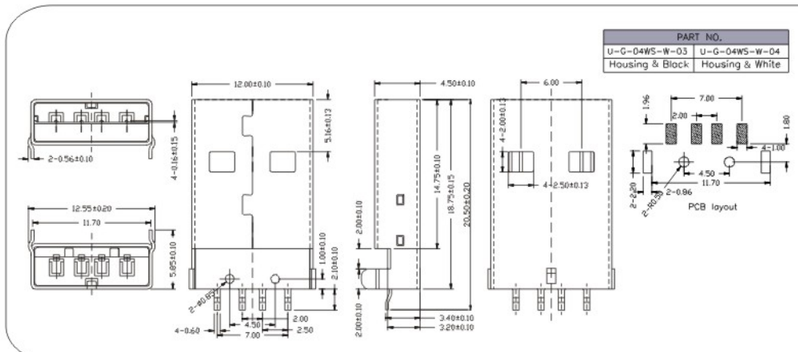

U-G-04WS-W-05

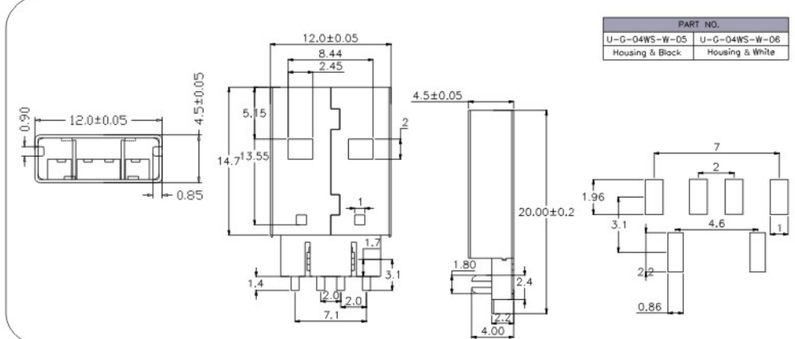

U-G-04WD-W-01

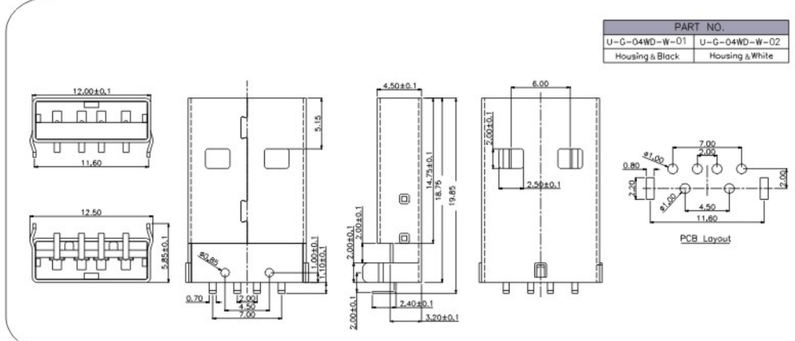

U-G-M5WS-W-01

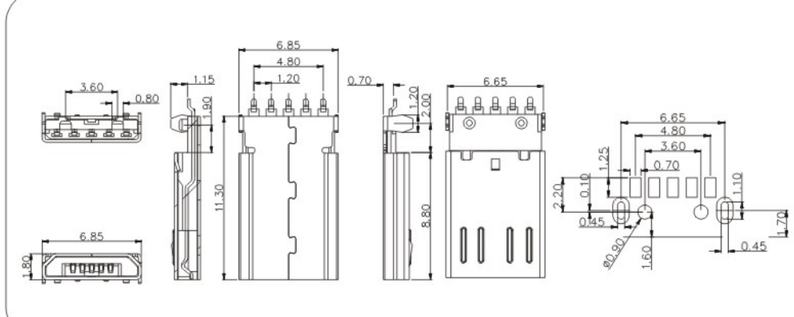

U-G-08WS-W-01

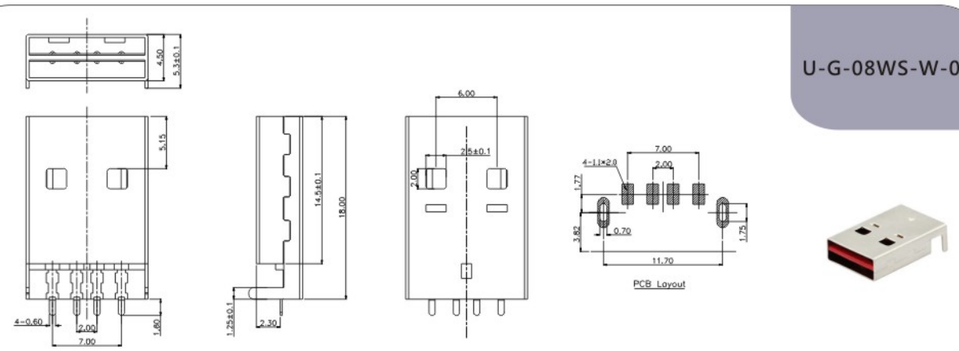

U-G-09WS-W-1

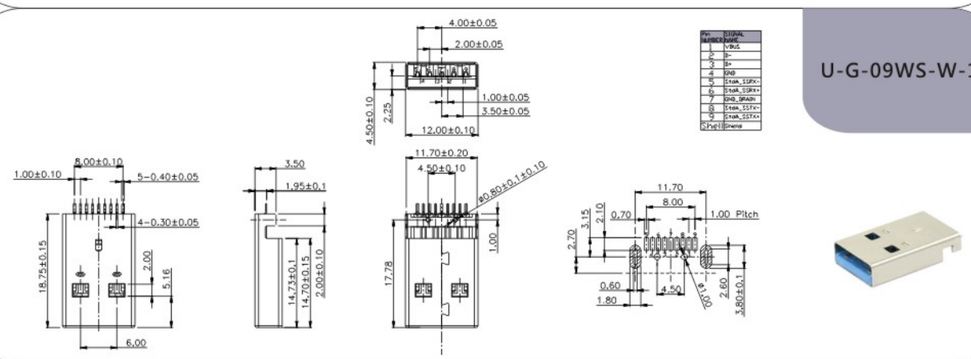

U-M-M5DD-W-2

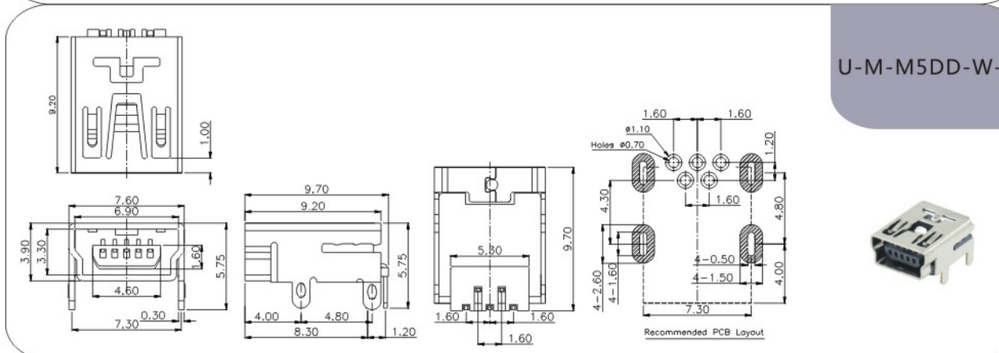

U-M-M5SS-W-2

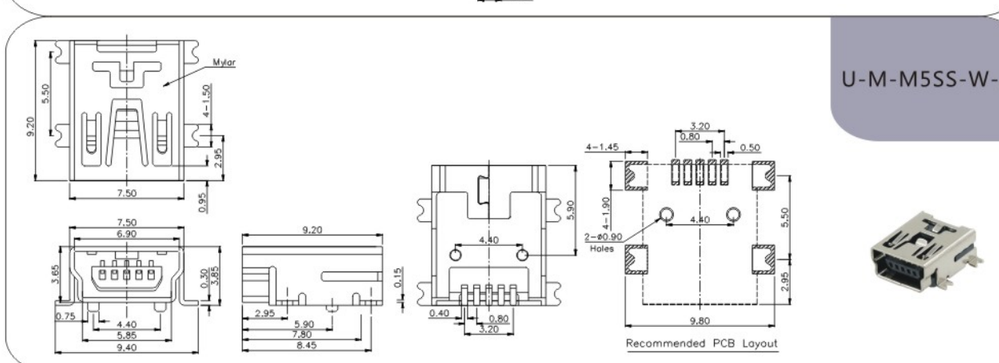

外型图 Dimensions

U-M-M8DD-W-1

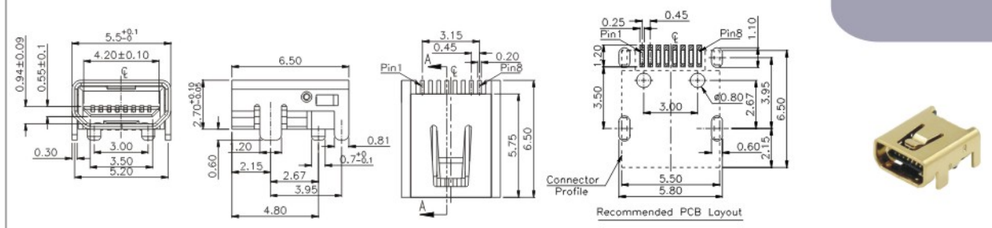

U-M-10DS-W-1

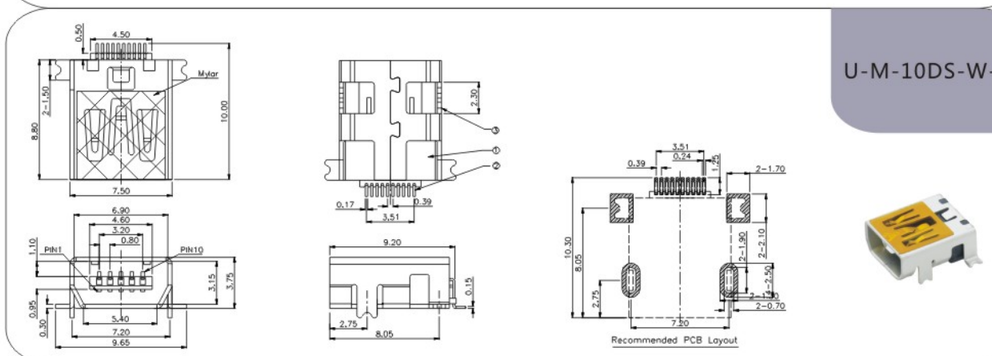

U-M-12DS-W-1

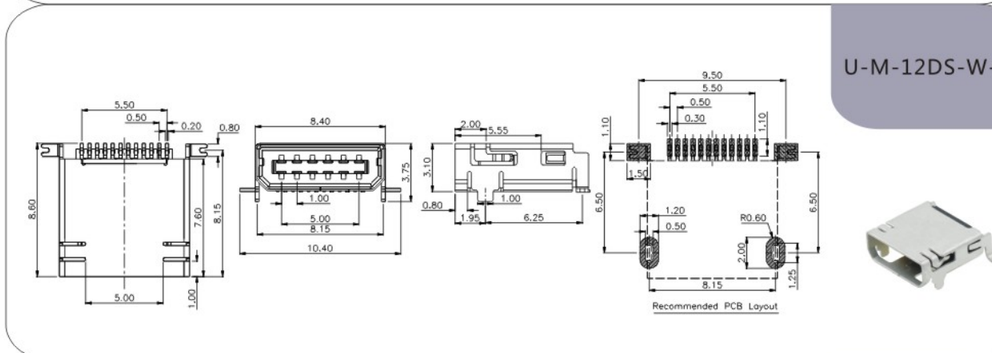

U-H-20DD-Y-1

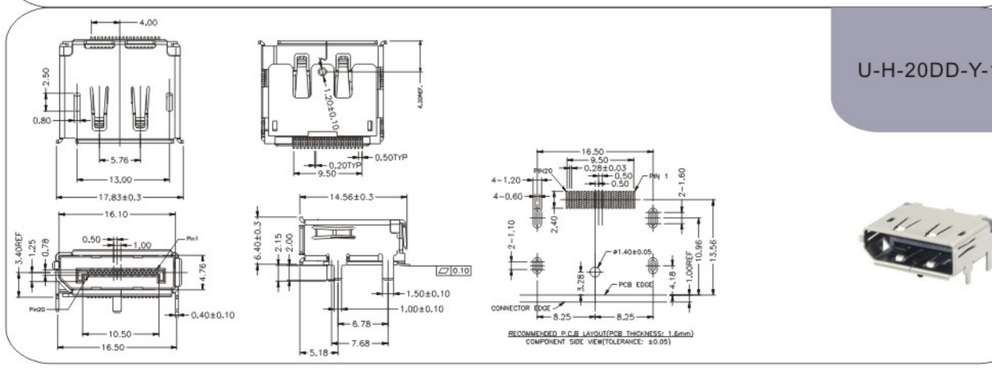

U-P-10SD-W-1

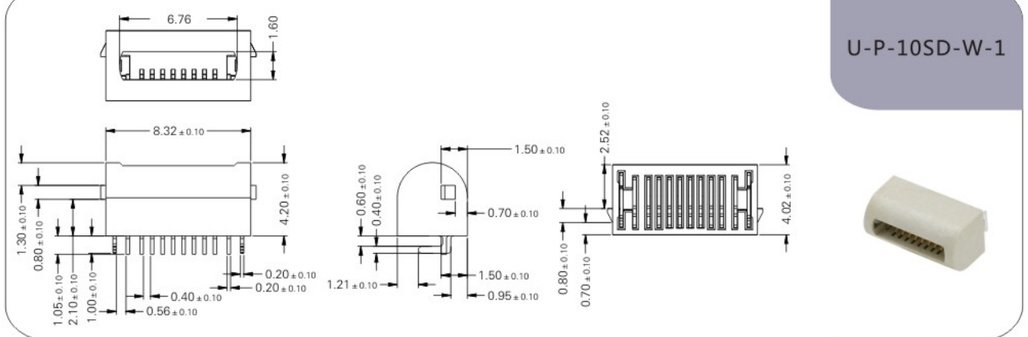

TYPE-C-31-D-01

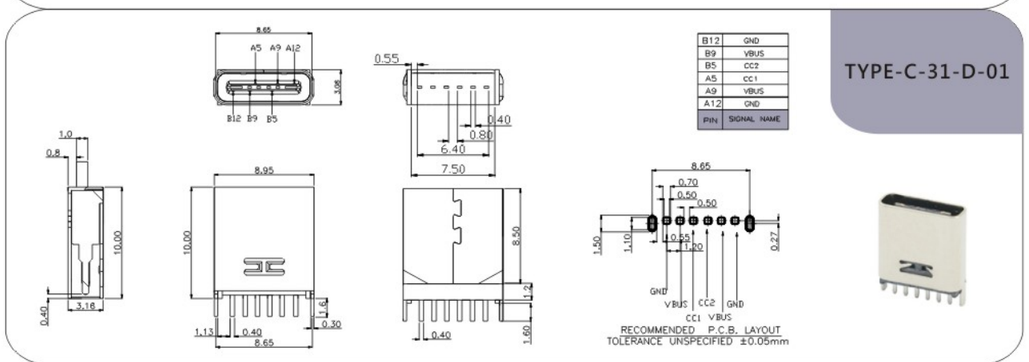

PIN	SIGNAL NAME
B12	GND
B9	VBUS
B5	CC2
A5	CC1
A9	VBUS
A12	GND

RECOMMENDED P.C.B. LAYOUT
TOLERANCE UNSPECIFIED ±0.05mm

TYPE-C-31-D-02

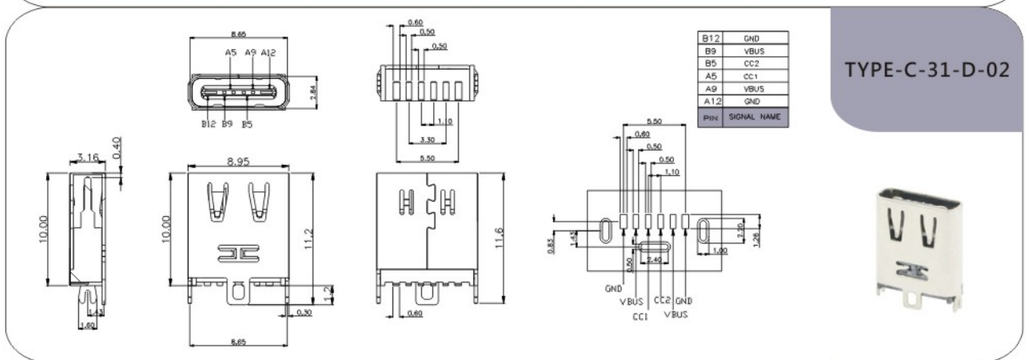

PIN	SIGNAL NAME
B12	GND
B9	VBUS
B5	CC2
A5	CC1
A9	VBUS
A12	GND

TYPE-C-31-D-03

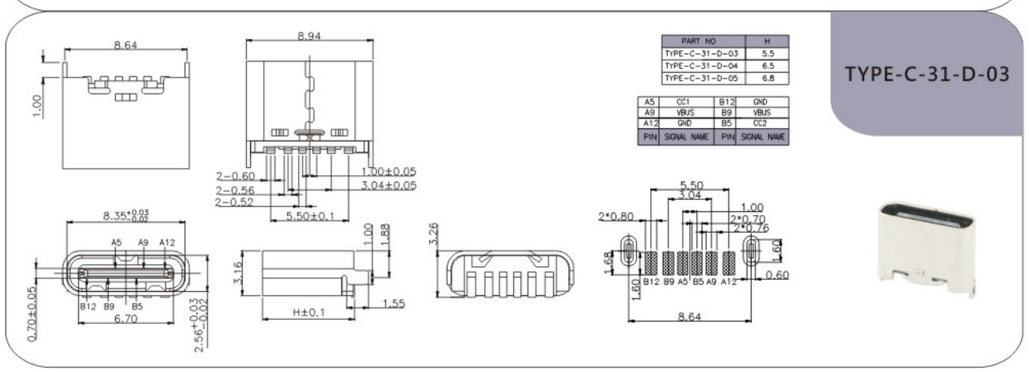

PART NO.	H
TYPE-C-31-D-03	5.5
TYPE-C-31-D-04	6.5
TYPE-C-31-D-05	6.8

PIN	SIGNAL NAME	PIN	SIGNAL NAME
A5	CC1	B12	GND
A9	VBUS	B9	VBUS
A12	GND	B5	CC2

外型图 Dimensions

TYPE-C-31-D-06

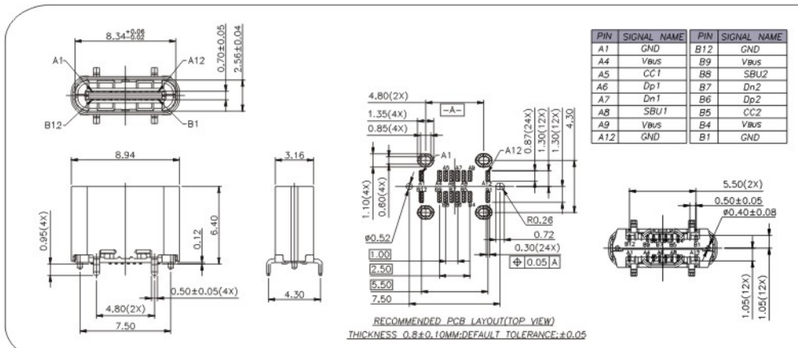

PIN	SIGNAL NAME	PIN	SIGNAL NAME
A1	GND	B12	GND
A4	VBUS	B9	VBUS
A5	CC1	B8	SBU2
A6	Dp1	B7	Dn2
A7	Dn1	B6	Dp2
A8	SBU1	B5	CC2
A9	VBUS	B4	VBUS
A12	GND	B1	GND

RECOMMENDED PCB LAYOUT(TOP VIEW)
THICKNESS 0.8±0.10MM;DEFAULT TOLERANCE:±0.05

TYPE-C-31-D-07

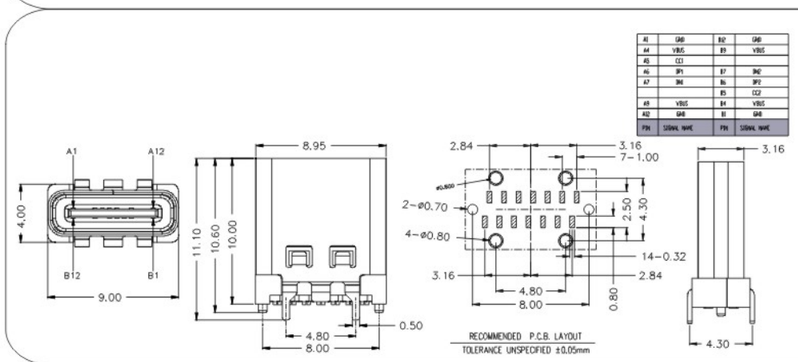

PIN	SIGNAL NAME	PIN	SIGNAL NAME
A1	GND	B12	GND
A4	VBUS	B9	VBUS
A5	CC1		
A6	DP1	B7	DN2
A7	DN1	B6	DP2
		B5	CC2
A9	VBUS	B4	VBUS
A12	GND	B1	GND

RECOMMENDED P.C.B. LAYOUT
TOLERANCE UNSPECIFIED ±0.05mm

TYPE-C-31-D-08

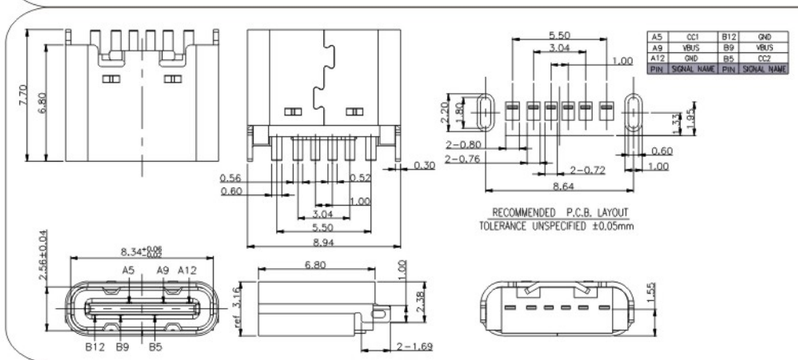

PIN	SIGNAL NAME	PIN	SIGNAL NAME
A5	CC1	B12	GND
A9	VBUS	B9	VBUS
A12	GND	B5	CC2

RECOMMENDED P.C.B. LAYOUT
TOLERANCE UNSPECIFIED ±0.05mm

TYPE-C-31-D-09

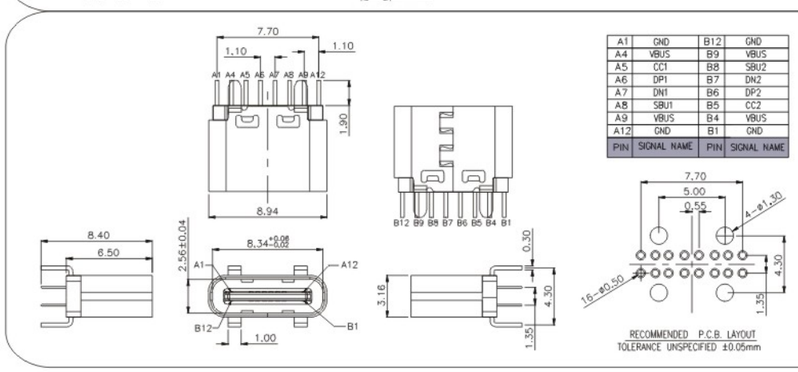

PIN	SIGNAL NAME	PIN	SIGNAL NAME
A1	GND	B12	GND
A4	VBUS	B9	VBUS
A5	CC1	B8	SBU2
A6	DP1	B7	DN2
A7	DN1	B6	DP2
A8	SBU1	B5	CC2
A9	VBUS	B4	VBUS
A12	GND	B1	GND

RECOMMENDED P.C.B. LAYOUT
TOLERANCE UNSPECIFIED ±0.05mm

TYPE-C-31-E-01

IP-X7

PIN ASSIGNMENT:

PIN NO.	A1&B12	A4&B9	A5	A5	A9&B4	A12&B1
SIGNAL NAME	GND	VBUS	CC1	CC2	VBUS	GND
PCB PAD NO.	C1	C2	C3	C4	C5	C6

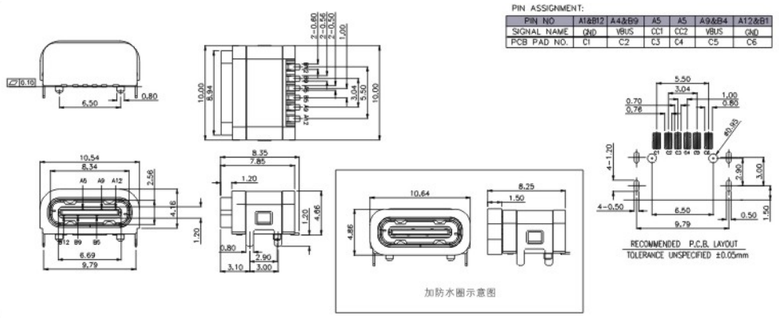

TYPE-C-31-E-02

IP-X7

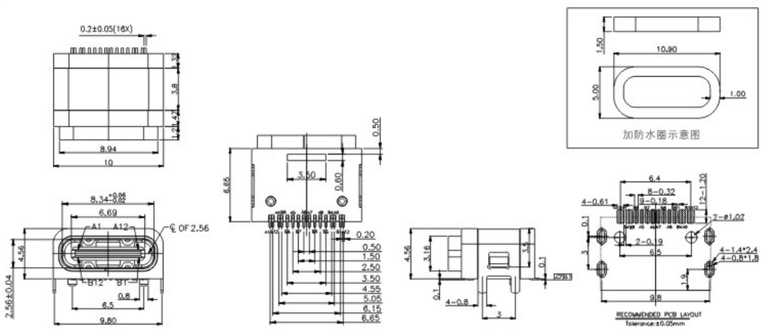

TYPE-C-31-E-03

IP-X7

A1	GND	B12	GND
A4	VBUS	B9	VBUS
A5	CC1	B8	SBU2
A6	DP1	B7	DN2
A7	DN1	B6	DP2
A8	SBU1	B5	CC2
A9	VBUS	B4	VBUS
A12	GND	B1	GND
PIN	SIGNAL NAME	PIN	SIGNAL NAME

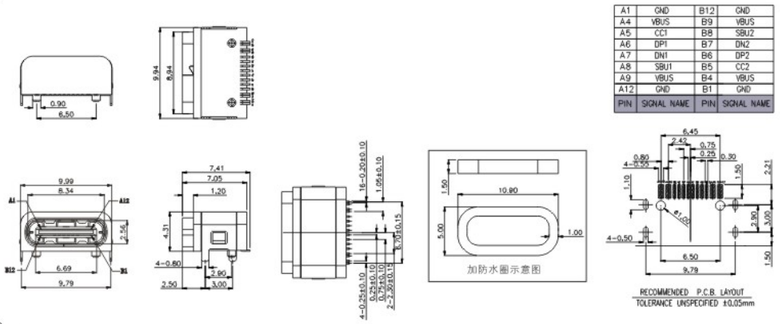

TYPE-C-31-E-04

IP-X7

Pin No	Signal Name	Mating Sequence	Pin No	Signal Name	Mating Sequence
A1	GND	First	B12	GND	First
A2	TX1+	Second	B11	RX1+	Second
A3	TX1−	Second	B10	RX1−	Second
A4	Vaus	First	B9	Vaus	First
A5	CC1	Second	B8	SBU2	Second
A6	D+	Second	B7	D−	Second
A7	D−	Second	B6	D+	Second
A8	SBU1	Second	B5	CC2	Second
A9	Vaus	First	B4	Vaus	First
A10	RX2−	Second	B3	TX2−	Second
A11	RX2+	Second	B2	TX2+	Second
A12	GND	First	B1	GND	First
SHELL		GND	SHELL		GND

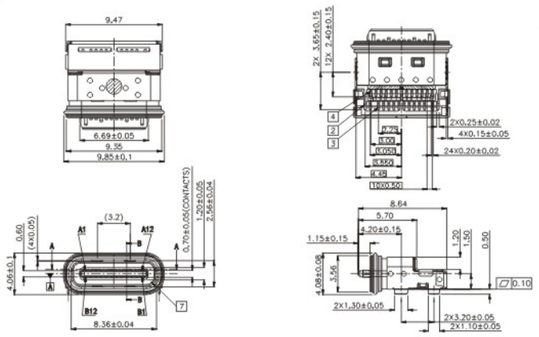

外型图 Dimensions

TYPE-C-31-E-05

IP-X7

PIN ASSIGNMENT:

PIN NO.	A1&B12	A4&B9	A5	A5	A9&B4	A12&B1
SIGNAL NAME	GND	VBUS	CC1	CC2	VBUS	GND
PCB PAD NO.	C1	C2	C3	C4	C5	C6

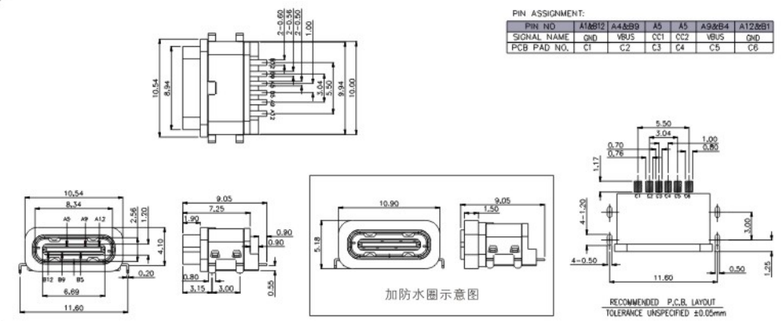

TYPE-C-31-E-06

IP-X7

A5	CC1	B12	GND
A9	VBUS	B9	VBUS
A12	GND	B5	CC2
PIN	SIGNAL NAME	PIN	SIGNAL NAME

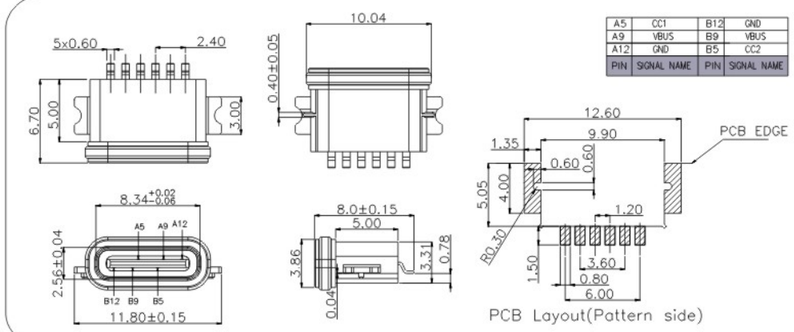

TYPE-C-31-E-07

IP-X7

A5	CC1	B12	GND
A9	VBUS	B9	VBUS
A12	GND	B5	CC2
PIN	SIGNAL NAME	PIN	SIGNAL NAME

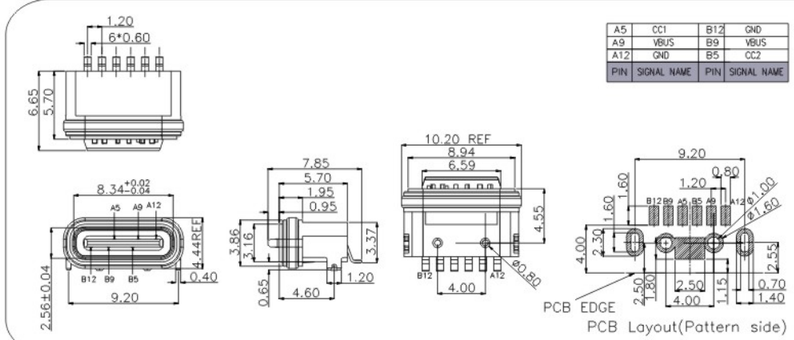

TYPE-C-31-E-08

IP-X7

A5	CC1	B12	GND
A9	VBUS	B9	VBUS
A12	GND	B5	GND
PIN	SIGNAL NAME	PIN	SIGNAL NAME

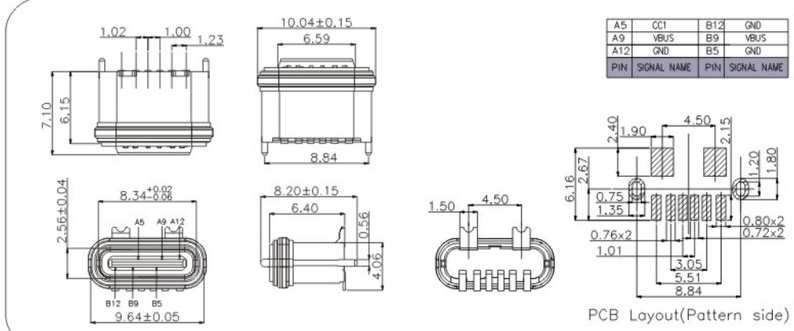

TYPE-C-31-E-09

IP-X7

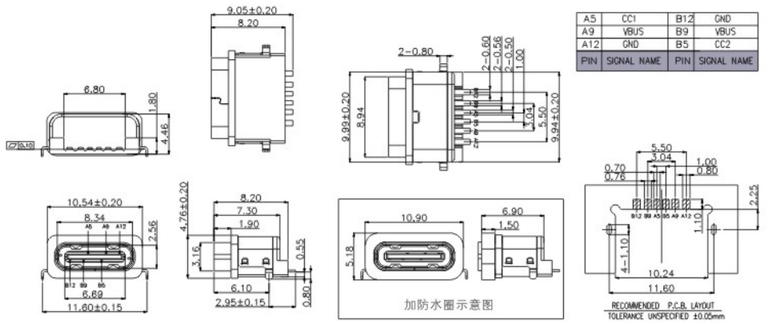

A5	CC1	B12	GND
A9	VBUS	B9	VBUS
A12	GND	B5	CC2
PIN	SIGNAL NAME	PIN	SIGNAL NAME

TYPE-C-31-E-10

IP-X7

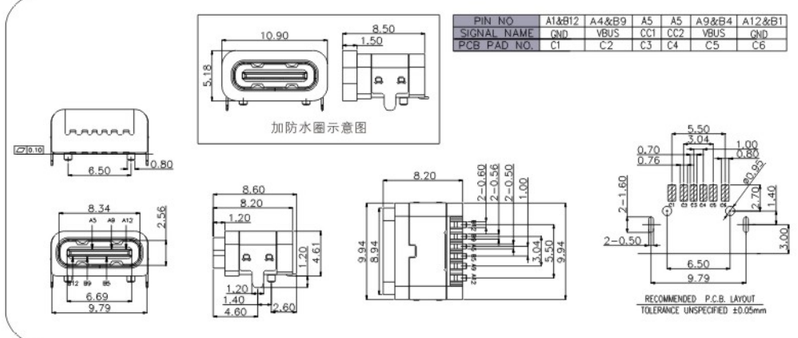

PIN NO.	A1&B12	A4&B9	A5	A5	A9&B4	A12&B1
SIGNAL NAME	GND	VBUS	CC1	CC2	VBUS	GND
PCB PAD NO.	C1	C2	C3	C4	C5	C6

TYPE-C-31-E-11

IP-X7

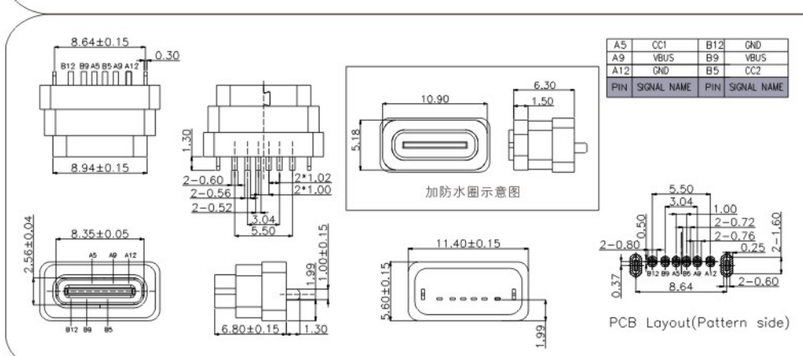

A5	CC1	B12	GND
A9	VBUS	B9	VBUS
A12	GND	B5	CC2
PIN	SIGNAL NAME	PIN	SIGNAL NAME

TYPE-C-31-E-12

IP-X7

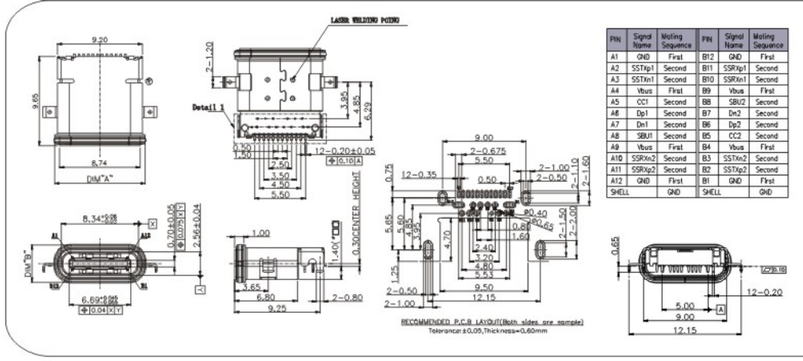

PIN	Signal Name	Mating Sequence	PIN	Signal Name	Mating Sequence
A1	GND	First	B12	GND	First
A2	SSTXp1	Second	B11	SSRXp1	Second
A3	SSTXn1	Second	B10	SSRXn1	Second
A4	Vbus	First	B9	Vbus	First
A5	CC1	Second	B8	SBU2	Second
A6	Dp1	Second	B7	Dn2	Second
A7	Dn1	Second	B6	Dp2	Second
A8	SBU1	Second	B5	CC2	Second
A9	Vbus	First	B4	Vbus	First
A10	SSRXn2	Second	B3	SSTXn2	Second
A11	SSRXp2	Second	B2	SSTXp2	Second
A12	GND	First	B1	GND	First
SHELL	GND		SHELL	GND	

外型图 Dimensions

TYPE-C-31-G-01

A12	A11	A10	A9	A8	A7	A6	A5	A4	A3	A2	A1
GND	RX2+	RX2−	VBUS	SBU1	D−	D+	CC	VBUS	TX1−	TX1+	GND
B1	B2	B3	B4	B5	B6	B7	B8	B9	B10	B11	B12
GND	TX2+	TX2−	VBUS	VCONN	D+	D−	SBU2	VBUS	RX1−	RX1+	GND

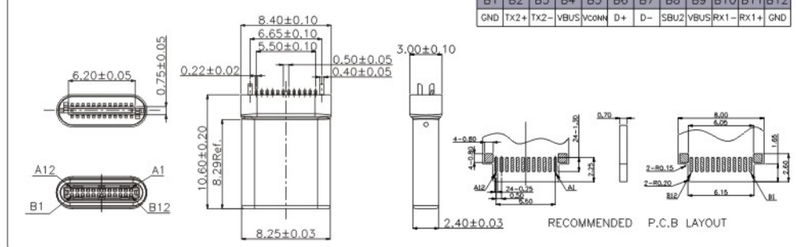

TYPE-C-31-G-02

A12	A11	A10	A9	A8	A7	A6	A5	A4	A3	A2	A1
GND	RX2+	RX2−	VBUS	SBU1	D−	D+	CC	VBUS	TX1−	TX1+	GND
GND	TX2+	TX2−	VBUS	Vconn			SBU2	VBUS	RX1−	RX1+	GND
B1	B2	B3	B4	B5	B6	B7	B8	B9	B10	B11	B12

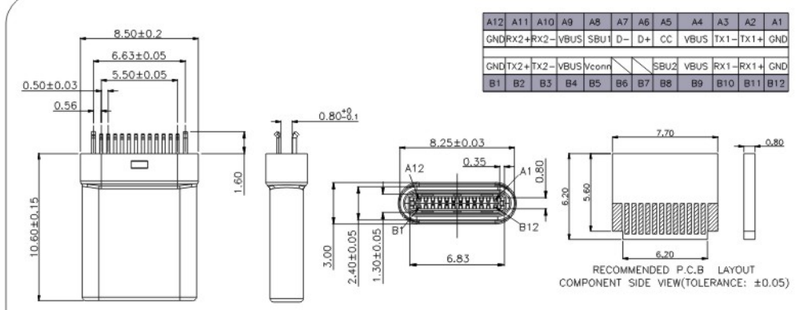

TYPE-C-31-G-03

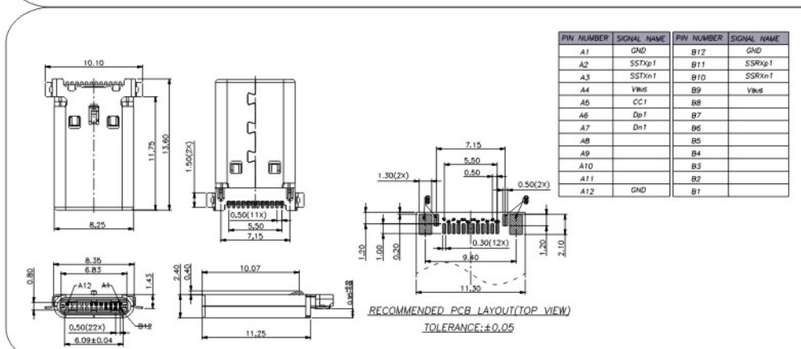

PIN NUMBER	SIGNAL NAME	PIN NUMBER	SIGNAL NAME
A1	GND	B12	GND
A2	SSTXp1	B11	SSRXp1
A3	SSTXn1	B10	SSRXn1
A4	VBus	B9	VBus
A5	CC1	B8	
A6	Dp1	B7	
A7	Dn1	B6	
A8		B5	
A9		B4	
A10		B3	
A11		B2	
A12	GND	B1	

TYPE-C-31-G-06

GND		Vbus		D−	D+		Vbus			GND
A1	A2	A3	A4	A5	A6	A7	A8	A9	A10	A11	A12
B12	B11	B10	B9	B8	B7	B6	B5	B4	B3	B2	B1

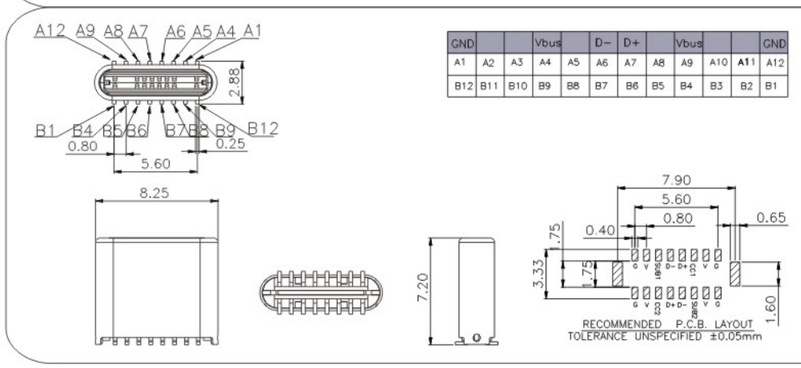

TYPE-C-31-G-07

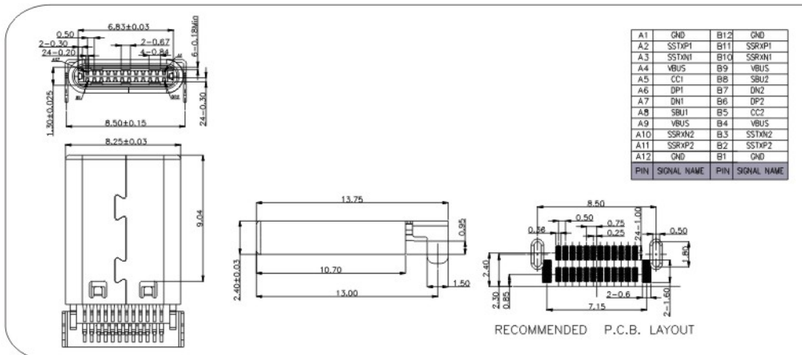

A1	GND	B12	GND
A2	SSTXP1	B11	SSRXP1
A3	SSTXN1	B10	SSRXN1
A4	VBUS	B9	VBUS
A5	CC1	B8	SBU2
A6	DP1	B7	DN2
A7	DN1	B6	DP2
A8	SBU1	B5	CC2
A9	VBUS	B4	VBUS
A10	SSRXN2	B3	SSTXN2
A11	SSRXP2	B2	SSTXP2
A12	GND	B1	GND
PIN	SIGNAL NAME	PIN	SIGNAL NAME

TYPE-C-31-G-08

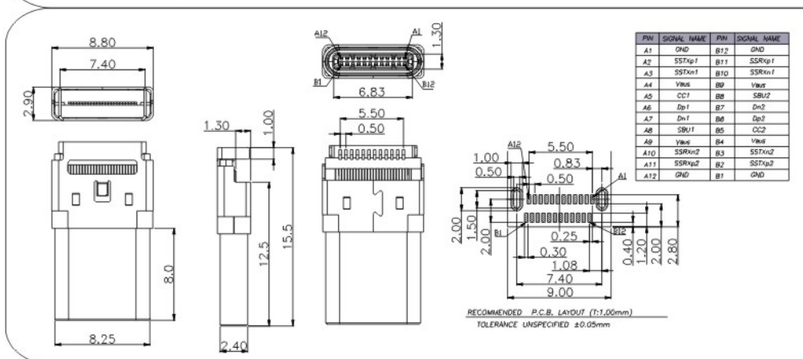

PIN	SIGNAL NAME	PIN	SIGNAL NAME
A1	GND	B12	GND
A2	SSTXp1	B11	SSRXp1
A3	SSTXn1	B10	SSRXn1
A4	Vbus	B9	Vbus
A5	CC1	B8	SBU2
A6	Dp1	B7	Dn2
A7	Dn1	B6	Dp2
A8	SBU1	B5	CC2
A9	Vbus	B4	Vbus
A10	SSRXn2	B3	SSTXn2
A11	SSRXp2	B2	SSTXp2
A12	GND	B1	GND

TYPE-C-31-M-01

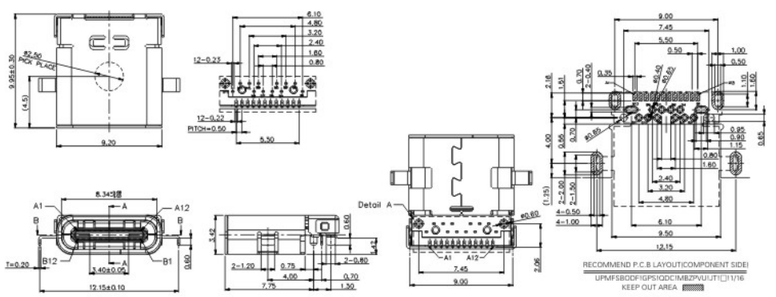

TYPE-C-31-M-02

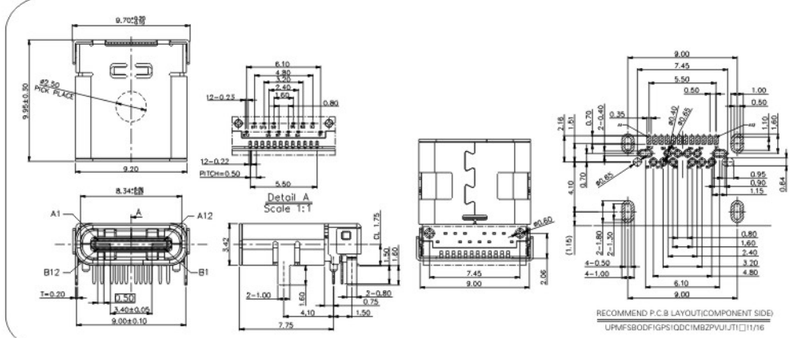

外型图 Dimensions

TYPE-C-31-M-04

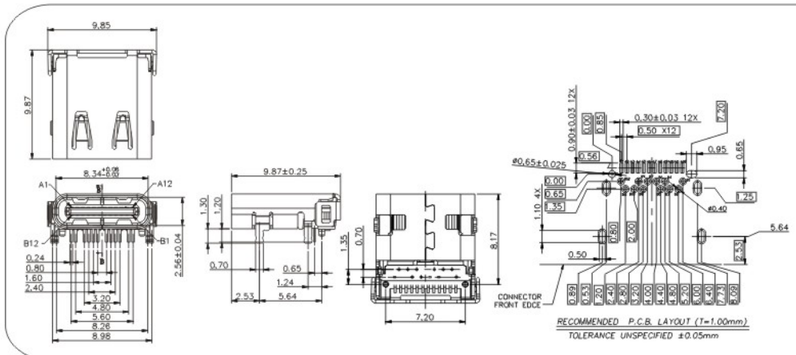

TYPE-C-31-M-05

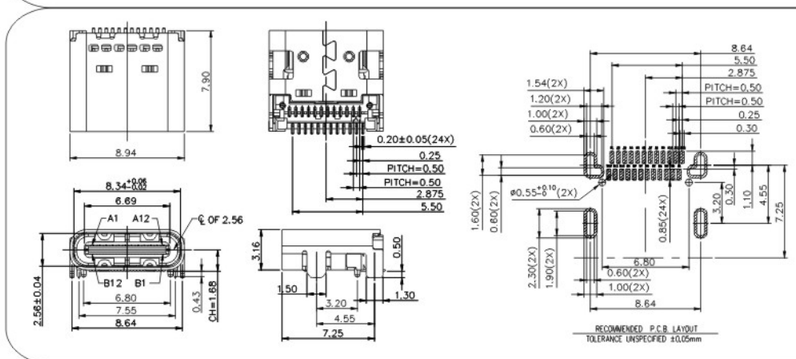

TYPE-C-31-M-06

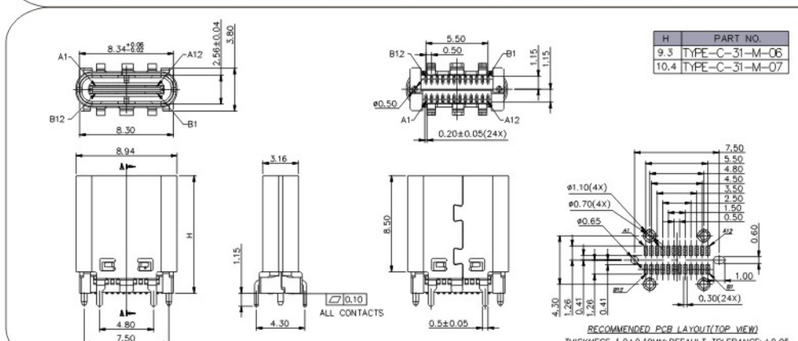

H	PART NO.
9.3	TYPE-C-31-M-06
10.4	TYPE-C-31-M-07

TYPE-C-31-M-08A

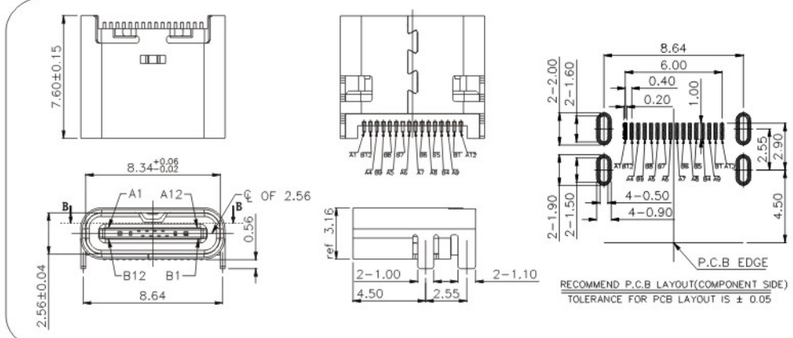

TYPE-C-31-M-10

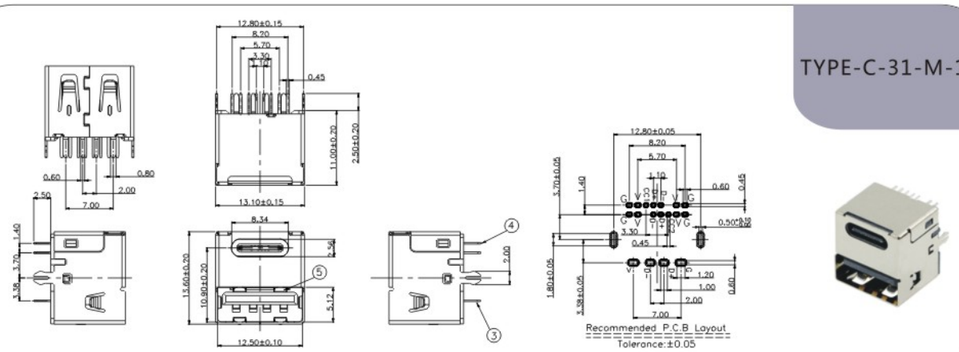

TYPE-C-31-M-11

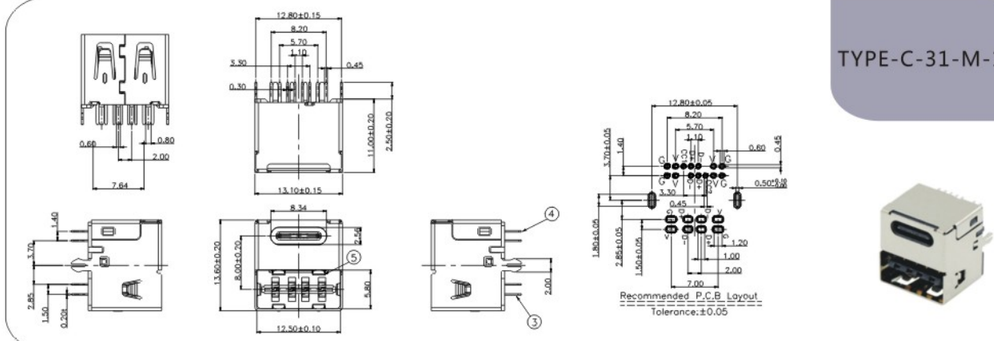

TYPE-C-31-M-12

A1	GND	B12	GND
A4	VBUS	B9	VBUS
A5	CC1	B8	SBU2
A6	DP1	B7	DN2
A7	DN1	B6	DP2
A8	SBU1	B5	CC2
A9	VBUS	B4	VBUS
A12	GND	B1	GND
PIN	SIGNAL NAME	PIN	SIGNAL NAME

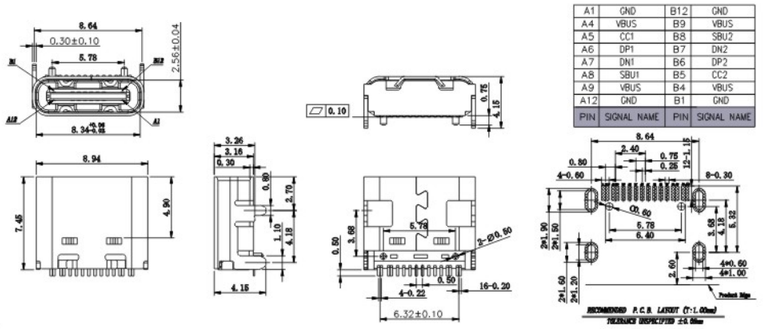

TYPE-C-31-M-13

A1	GND	B12	GND
A4	VBUS	B9	VBUS
A5	CC1	B8	SBU2
A6	DP1	B7	DN2
A7	DN1	B6	DP2
A8	SBU1	B5	CC2
A9	VBUS	B4	VBUS
A12	GND	B1	GND
PIN	SIGNAL NAME	PIN	SIGNAL NAME

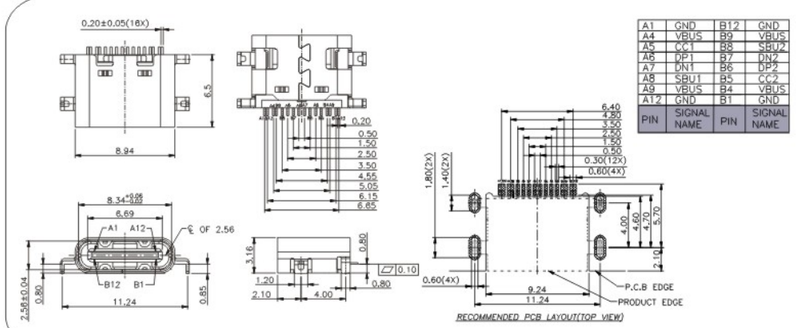

外型图 Dimensions

TYPE-C-31-M-14

A1	GND	B12	GND
A4	VBUS	B9	VBUS
A5	CC1	B8	SBU2
A6	DP1	B7	DN2
A7	DN1	B6	DP2
A8	SBU1	B5	CC2
A9	VBUS	B4	VBUS
A12	GND	B1	GND
PIN	SIGNAL NAME	PIN	SIGNAL NAME

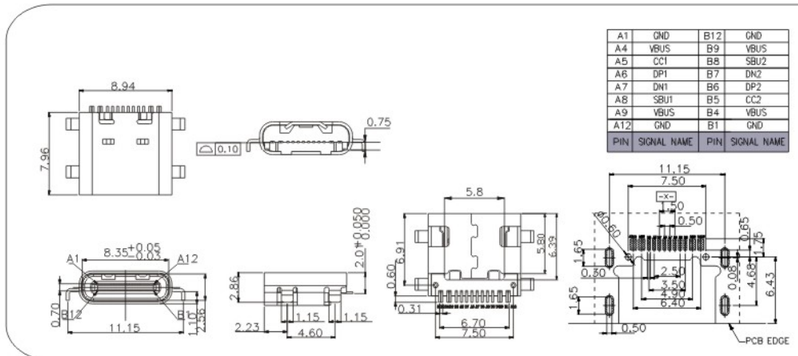

TYPE-C-31-M-15

A1	GND	B12	GND
A4	VBUS	B9	VBUS
A5	CC1	B8	
A6	DP1	B7	DN2
A7	DN1	B6	DP2
A8		B5	CC2
A9	VBUS	B4	VBUS
A12	GND	B1	GND
PIN	SIGNAL NAME	PIN	SIGNAL NAME

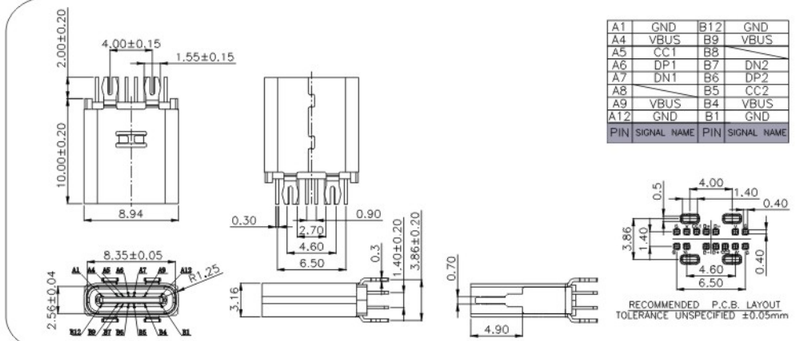

TYPE-C-31-M-16

B12	GND
B9	VBUS
B5	CC2
A5	CC1
A9	VBUS
A12	GND
PIN	SIGNAL NAME

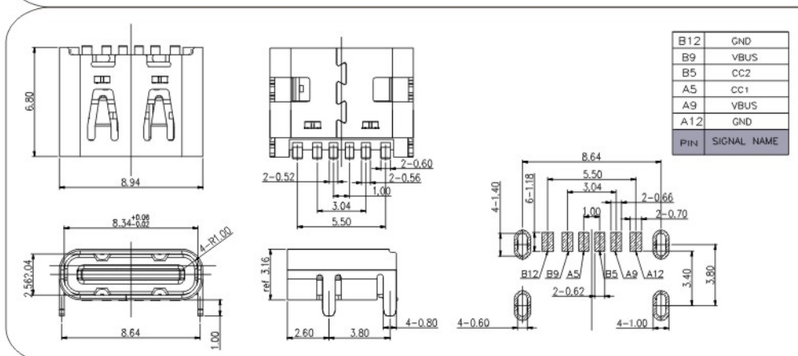

TYPE-C-31-M-17

PIN NUMBER	SIGNAL NAME
A5	CC1
A9	VBUS
A12	GND
B12	GND
B9	VBUS
B5	CC2

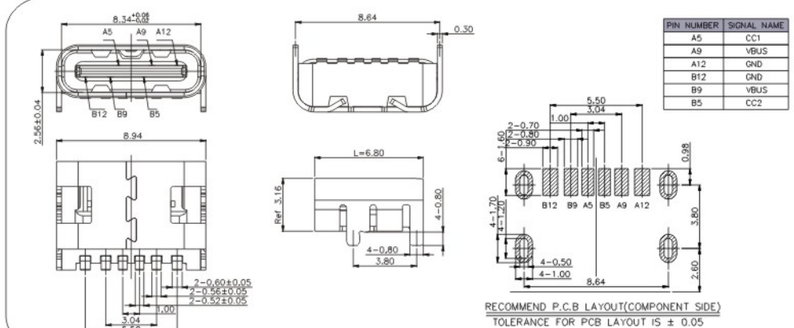

TYPE-C-31-M-18

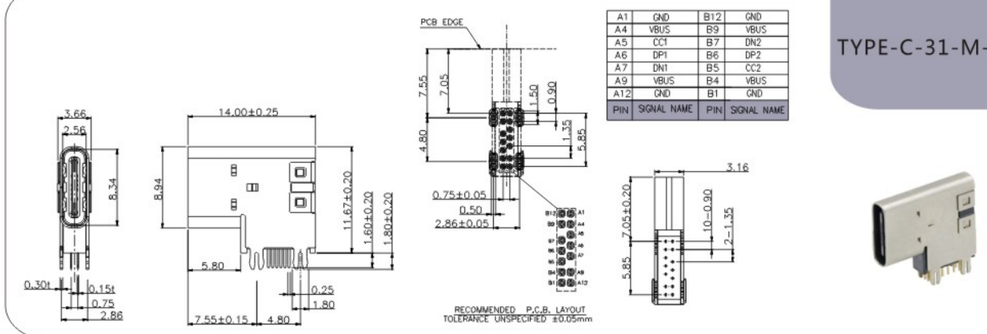

A1	GND	B12	GND
A4	VBUS	B9	VBUS
A5	CC1	B7	DN2
A6	DP1	B6	DP2
A7	DN1	B5	CC2
A9	VBUS	B4	VBUS
A12	GND	B1	GND
PIN	SIGNAL NAME	PIN	SIGNAL NAME

TYPE-C-31-M-20

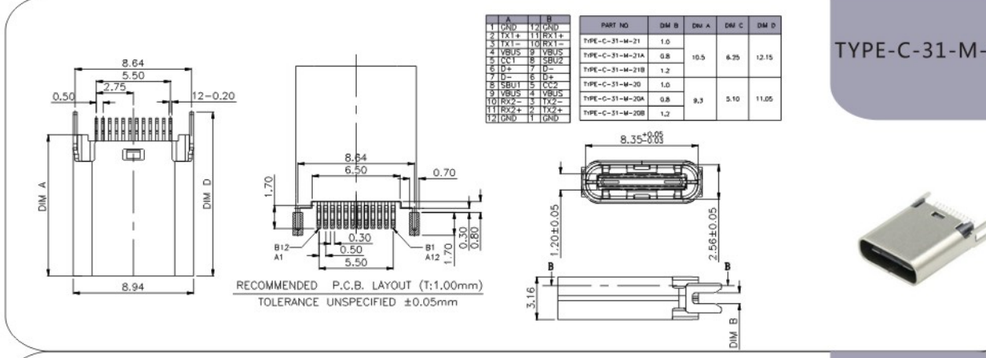

A		B	
1	GND	12	GND
2	TX1+	11	RX1+
3	TX1−	10	RX1−
4	VBUS	9	VBUS
5	CC1	8	SBU2
6	D+	7	D−
7	D−	6	D+
8	SBU1	5	CC2
9	VBUS	4	VBUS
10	RX2−	3	TX2−
11	RX2+	2	TX2+
12	GND	1	GND

PART NO	DIM B	DIM A	DIM C	DIM D
TYPE-C-31-M-21	1.0	10.5	6.35	12.15
TYPE-C-31-M-21A	0.8			
TYPE-C-31-M-21B	1.2			
TYPE-C-31-M-20	1.0	9.3	5.10	11.05
TYPE-C-31-M-20A	0.8			
TYPE-C-31-M-20B	1.2			

TYPE-C-31-M-22

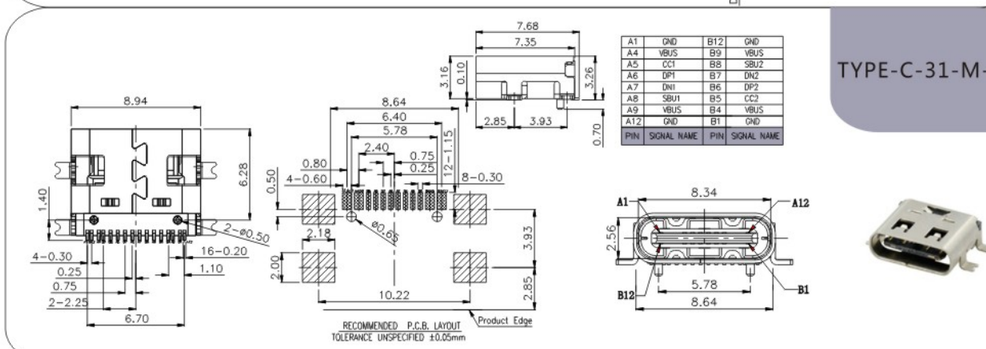

A1	GND	B12	GND
A4	VBUS	B9	VBUS
A5	CC1	B8	SBU2
A6	DP1	B7	DN2
A7	DN1	B6	DP2
A8	SBU1	B5	CC2
A9	VBUS	B4	VBUS
A12	GND	B1	GND
PIN	SIGNAL NAME	PIN	SIGNAL NAME

TYPE-C-31-M-23

PIN ASSIGNMENT:

Pin No.	A1&B12	A5	A4&B9	A6	B6	B7	B6	B5	A7	A9&B4	A8	A12&B1
Signal Name	GND	CC1	VBUS	D+	SBU2	D−	D+	CC2	D−	VBUS	SBU1	GND
PCB PAD No.	C1	C2	C3	C4	C5	C6	C7	C8	C9	C10	C11	C12

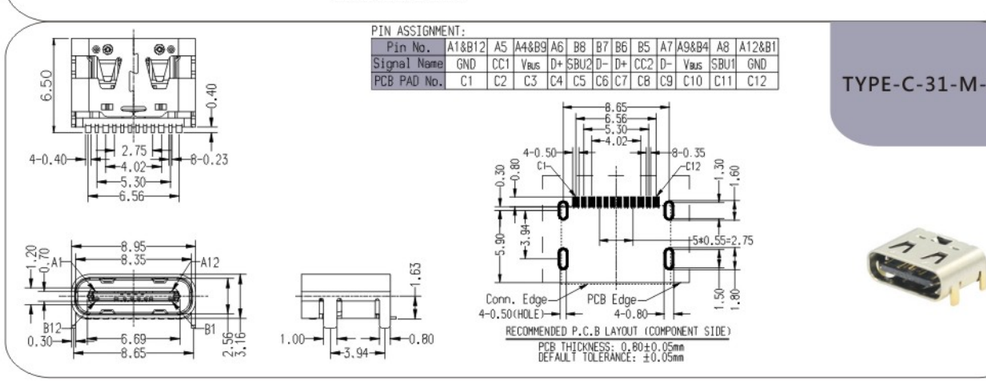

外型图 Dimensions

TYPE-C-31-M-26

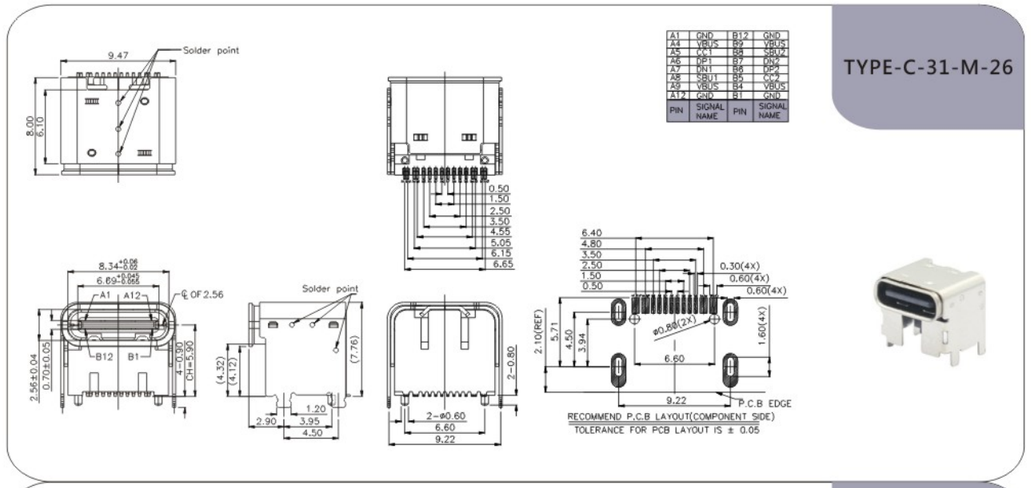

A1	GND	B12	GND
A4	VBUS	B9	VBUS
A5	CC1	B8	SBU2
A6	DP1	B7	DN2
A7	DN1	B6	DP2
A8	SBU1	B5	CC2
A9	VBUS	B4	VBUS
A12	GND	B1	GND
PIN	SIGNAL NAME	PIN	SIGNAL NAME

TYPE-C-31-M-27

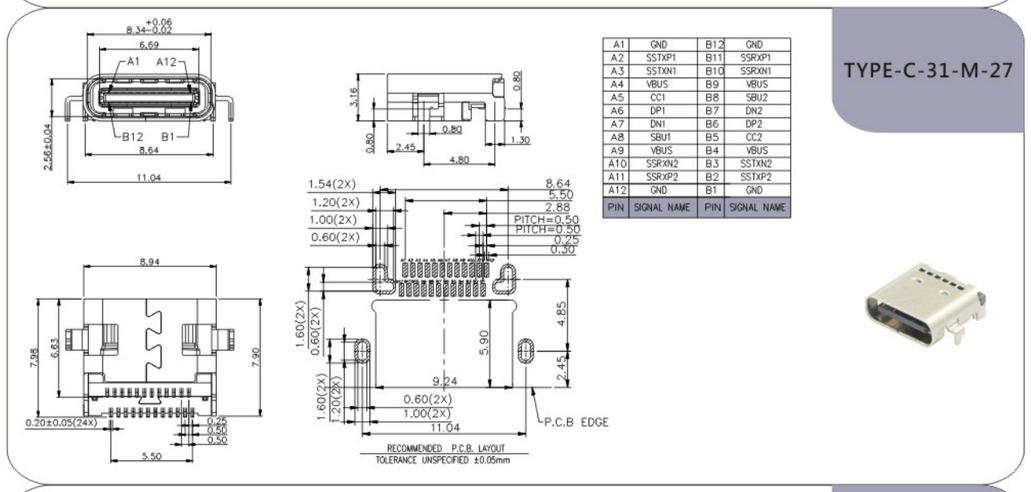

A1	GND	B12	GND
A2	SSTXP1	B11	SSRXP1
A3	SSTXN1	B10	SSRXN1
A4	VBUS	B9	VBUS
A5	CC1	B8	SBU2
A6	DP1	B7	DN2
A7	DN1	B6	DP2
A8	SBU1	B5	CC2
A9	VBUS	B4	VBUS
A10	SSRXN2	B3	SSTXN2
A11	SSRXP2	B2	SSTXP2
A12	GND	B1	GND
PIN	SIGNAL NAME	PIN	SIGNAL NAME

TYPE-C-31-M-28

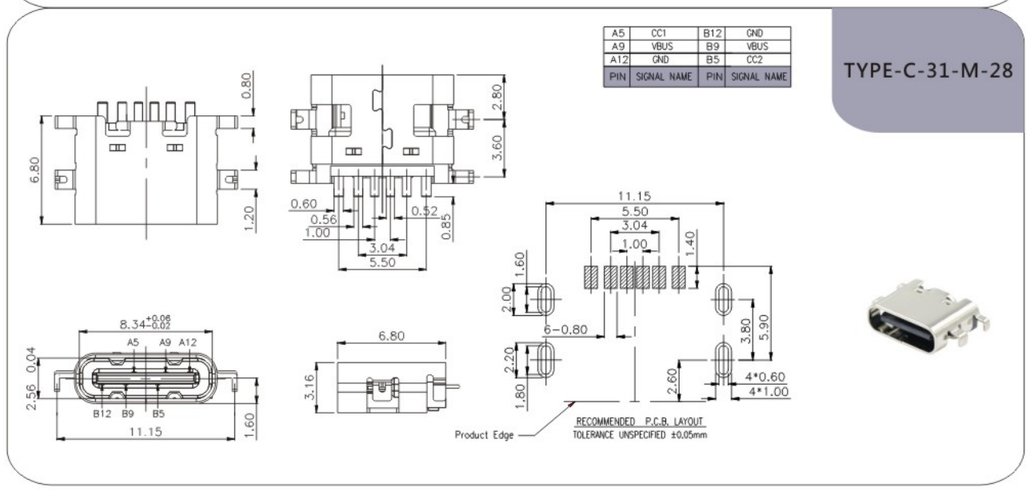

A5	CC1	B12	GND
A9	VBUS	B9	VBUS
A12	GND	B5	CC2
PIN	SIGNAL NAME	PIN	SIGNAL NAME

TYPE-C-31-M-29

A5	CC1	B12	GND
A9	VBUS	B9	VBUS
A12	GND	B5	CC2
PIN	SIGNAL NAME	PIN	SIGNAL NAME

PART NO	H
TYPE-C-31-M-29	6.80
TYPE-C-31-M-29A	6.50

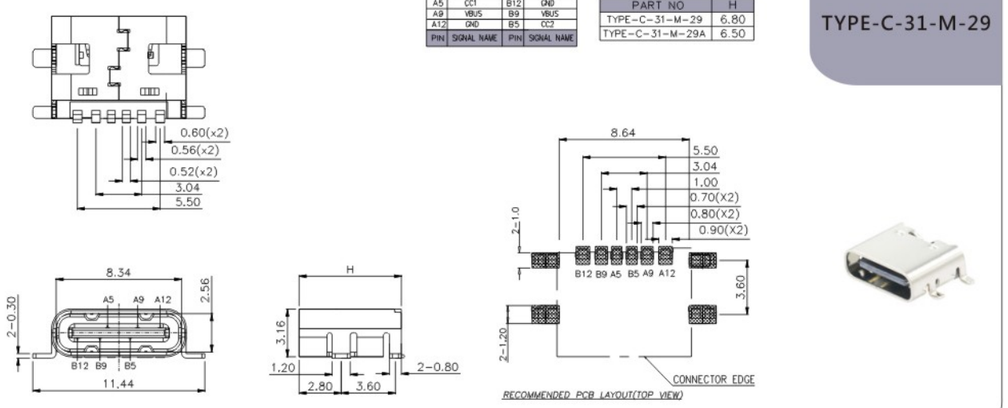

TYPE-C-31-M-30

PIN ASSIGNMENT											
A1	A2	A3	A4	A5	A6	A7	A8	A9	A10	A11	A12
GND	TX1+	TX1-	VBUS	CC1	D+	D-	SBU1	VBUS	RX2-	RX2+	GND
GND	RX1+	RX1-	VBUS	SBU2	D-	D+	CC2	VBUS	TX2-	TX2+	GND
B12	B11	B10	B9	B8	B7	B6	B5	B4	B3	B2	B1

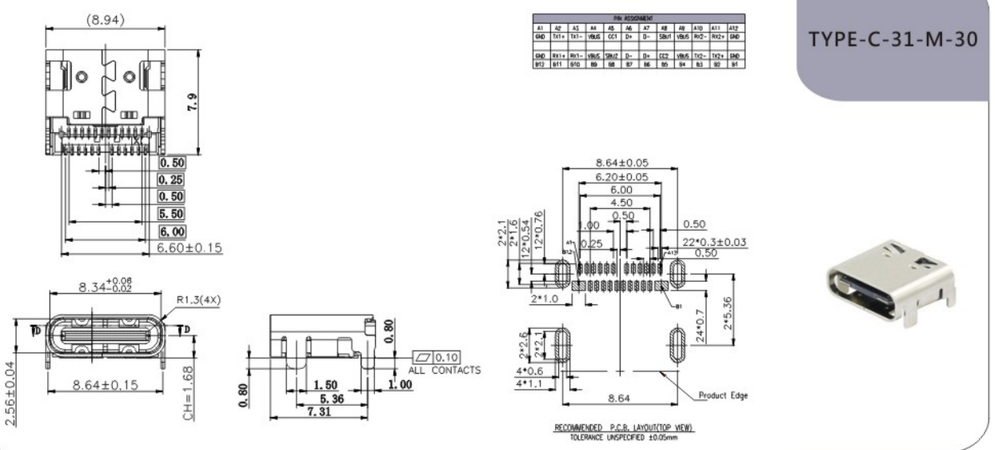

TYPE-C-31-M-31

A1	GND	B12	GND
A4	VBUS	B9	VBUS
A5	CC1	B8	SBU2
A6	DP1	B7	DN2
A7	DN1	B6	DP2
A8	SBU1	B5	CC2
A9	VBUS	B4	VBUS
A12	GND	B1	GND
PIN	SIGNAL NAME	PIN	SIGNAL NAME

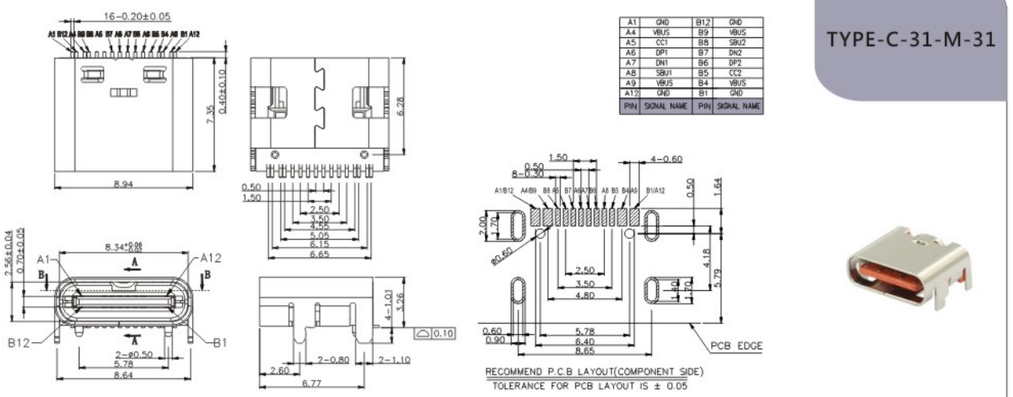

外型图 Dimensions

TYPE-C-31-M-32

A5	CC1	B12	GND
A9	VBUS	B9	VBUS
A12	GND	B5	CC2
PIN	SIGNAL NAME	PIN	SIGNAL NAME

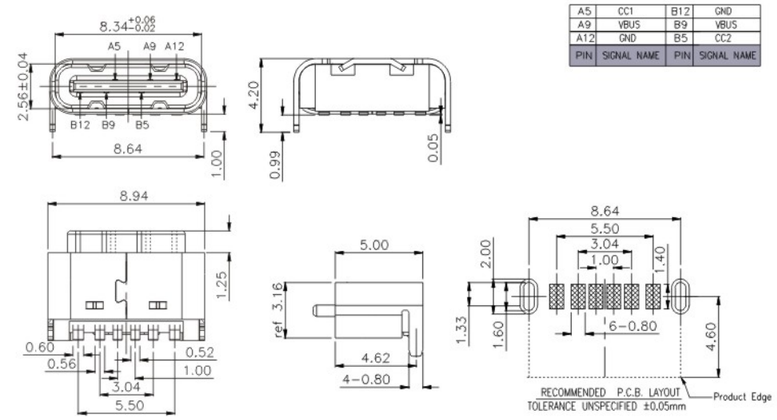

TYPE-C-31-M-33

A9	VBUS
B12	GND
PIN	SIGNAL NAME

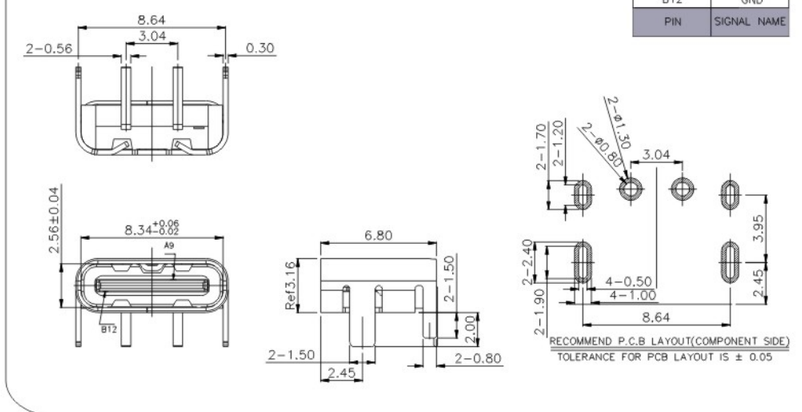

TYPE-C-31-M-34

PIN	SIGNAL NAME	PIN	SIGNAL NAME
A1	GND	B12	GND
A2	SSTXp1	B11	SSRXp1
A3	SSTXn1	B10	SSRXn1
A4	VBUS	B9	VBUS
A5	CC1	B8	SBU2
A6	Dp1	B7	Dn2
A7	Dn1	B6	Dp2
A8	SBU1	B5	CC2
A9	VBUS	B4	VBUS
A10	SSRXn2	B3	SSTXn2
A11	SSRXp2	B2	SSTXp2
A12	GND	B1	GND

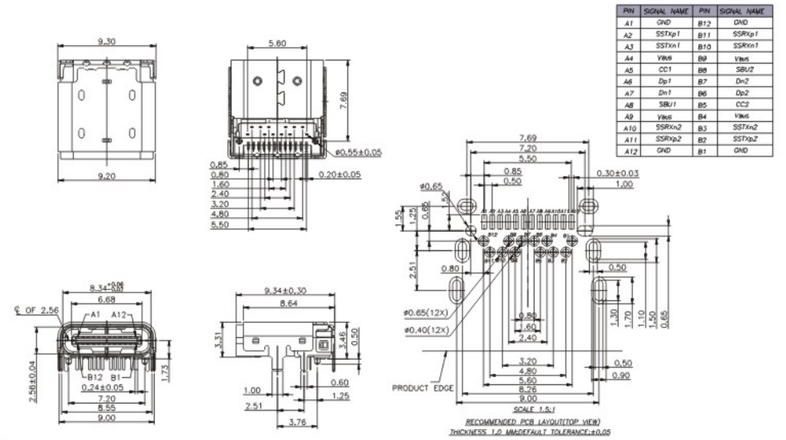

特征 Features

- 具备A Type/B Type/Mini USB 公母座多种类型接口设计。
  With A Type/B Type/Mini USB variety of types of public Socket Interface Design
- 安装形式有DIP/SMT/夹线式/焊点线式供选择。
  Installed in the form of DIP/SMT/clip wire/wire type available
- 接触端子采用弹性结构设计，保证良好的接触稳定性和长寿命要求。
  Flexibility design for terminal interface to ensure nice contact and prolong
- 符合多种焊接设备参数的耐温要求。
  Meet a variety of welding equipment parameters temperature requirements

规格参数 Basic specfication parameter

电气特性 Electrical Characteristics	额定负荷 Rating	详见具体产品规格
	接触阻抗 Contact Resistance	30mΩ Max
	绝缘阻抗 Insulation Resistance	100mΩ Min
	绝缘耐电压 Withstand voltage	AC500V(50-60HZ) 1Minute
	电气寿命 Electrical Life	5,000Cycles
机械/可靠性特性 Mechanical/reliability Characteristics	操作力 Operating force range	详见具体产品规格
	机械寿命 Mechanical Life	5,000Cycles
	使用温度 Operating temperature range	-25°C+80°C
	使用湿度 Ambient humidity used	≤85%RH
	可焊性 Solder ability	245°C ± 5°C 3S ± 1S
	耐焊接热 Withstand Soldering temperature	260°C ± 5°C 3S ± 1S

焊接条件 Welding conditions

- 手工焊 Hand soldering
  使用30瓦烙铁，烙铁尖端温度不超过350℃，焊接时间3S。
  Use a soldering iron of 30 watts, Controlled at 350°C approximately 3 seconds while solder applying
- 波峰焊/回流焊Wave soldering/Reflow Soldering
  峰值温度不超过260℃，焊接时间不超过5S（焊接温度曲线参考如下）。
  The peak temperature of the wave oven should be set to 260°C max.Condition for soldering Temperature Profile

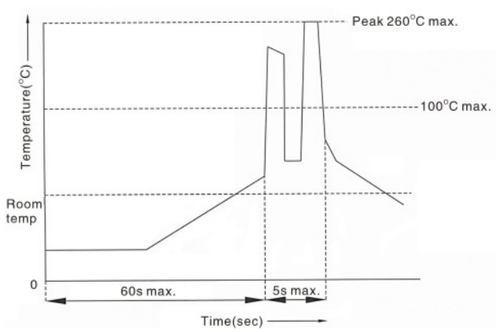

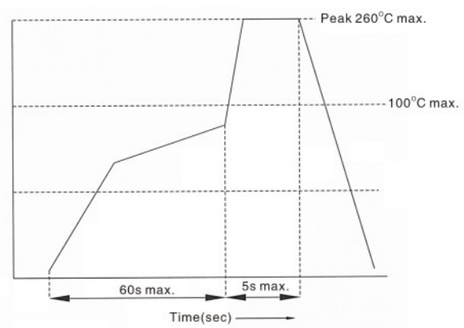

外型图 Dimensions

1.25T-nP-DP

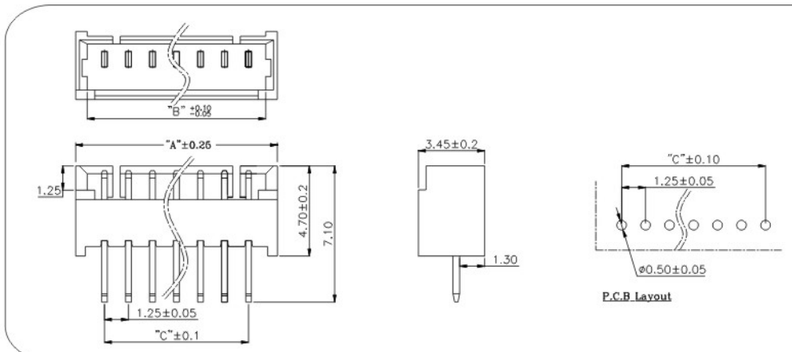

1.25T-nP-WP

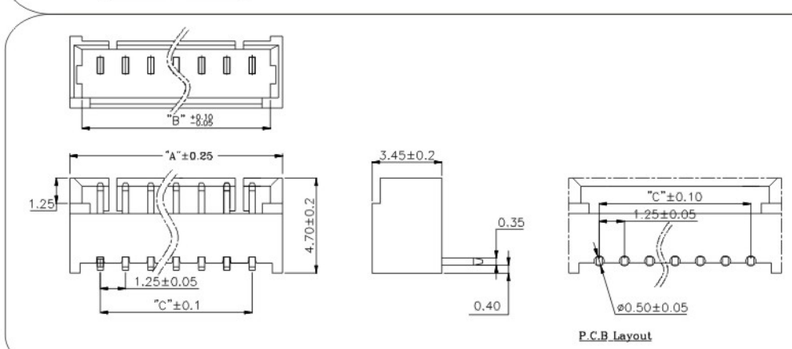

1.25T-nP-WT

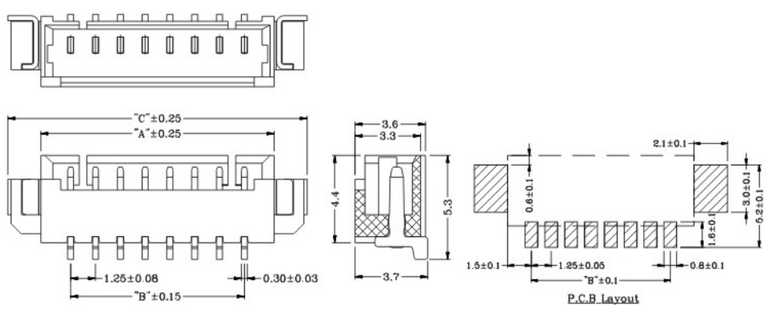

1.25T-nP-WV

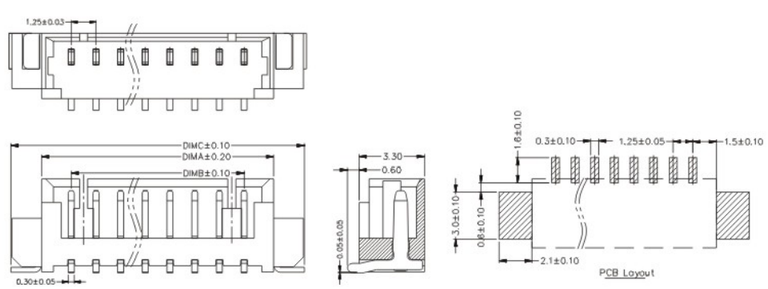

BC-1-3P

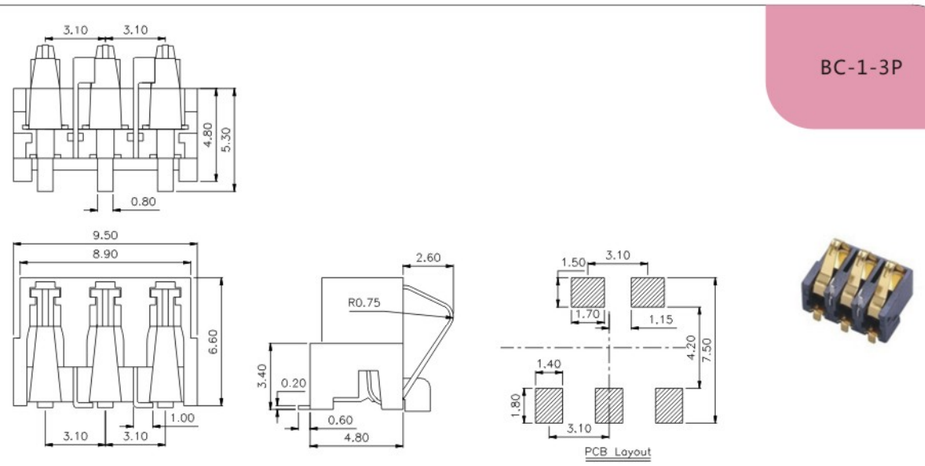

BC-3-3P

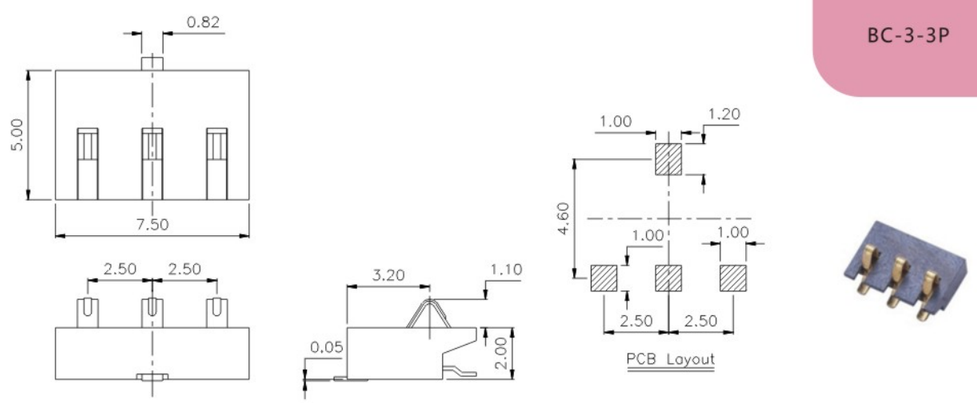

BC-3-3PD

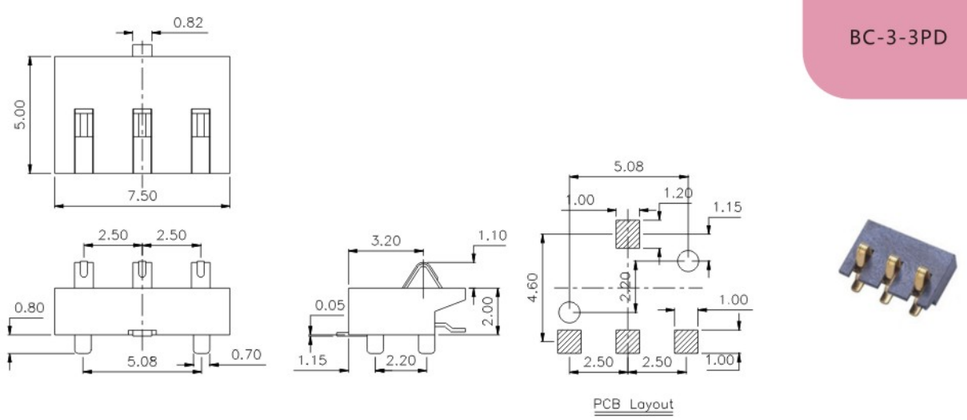

外型图 Dimensions

BC-4-3P

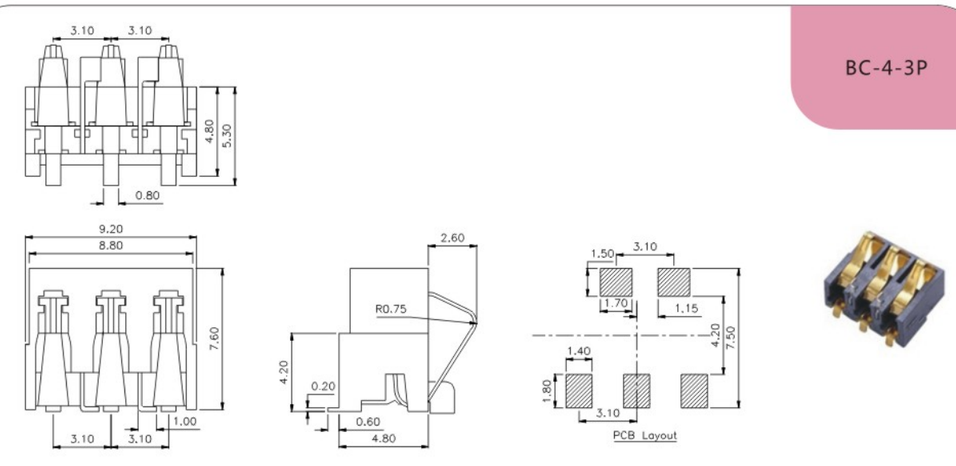

BC-4-3PD

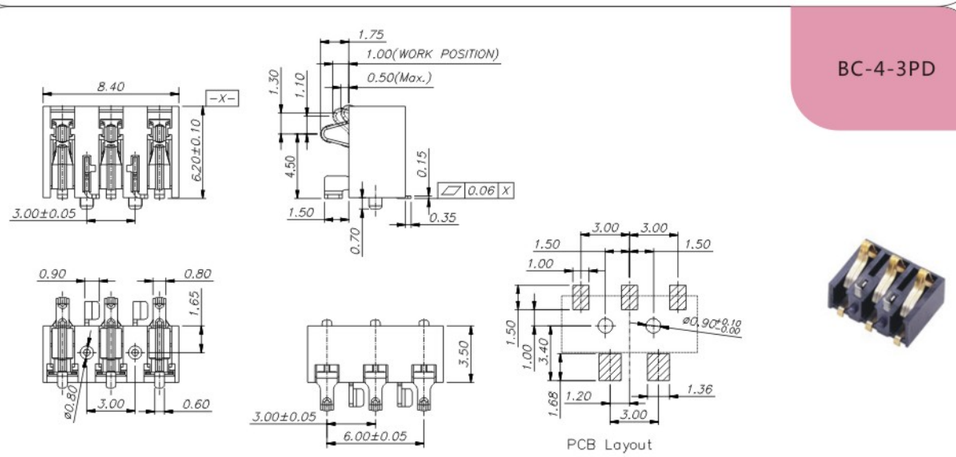

BC-8-3PD

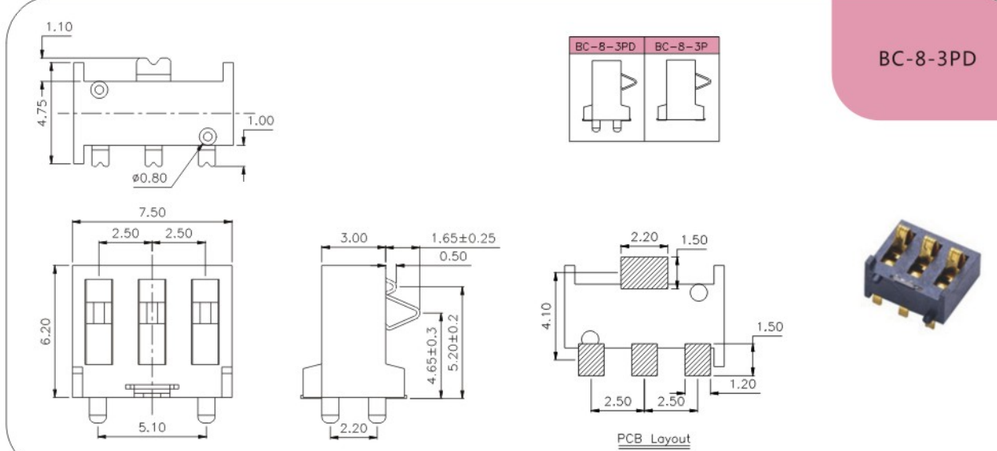

BC-10-3PD

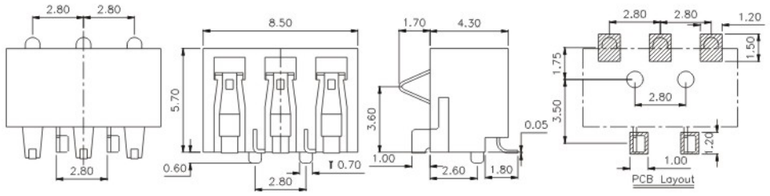

BC-12-4P

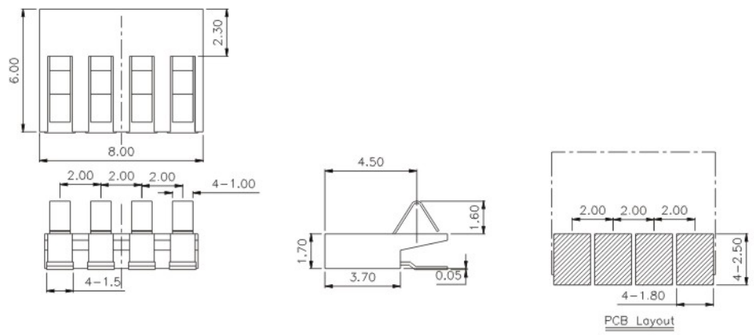

SIM-01A

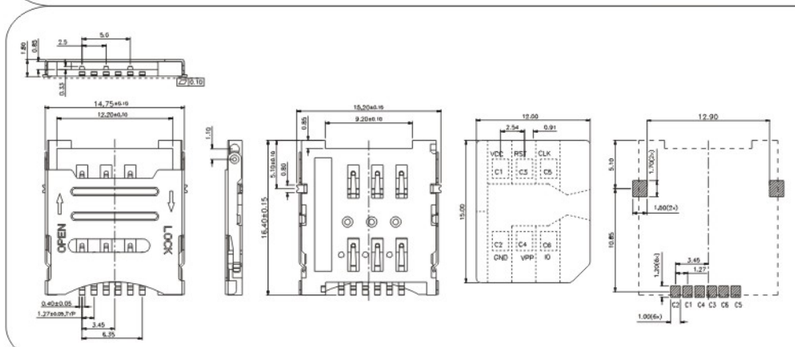

SIM-06A

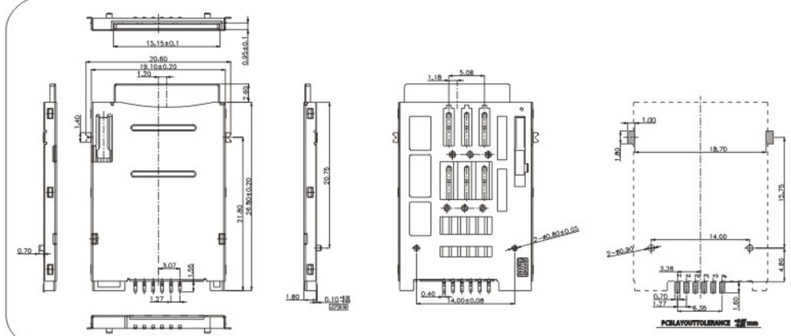

外型图 Dimensions

SIM-08A

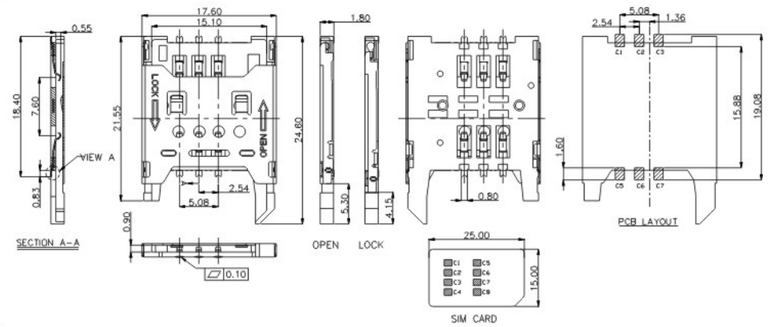

SIM-09A

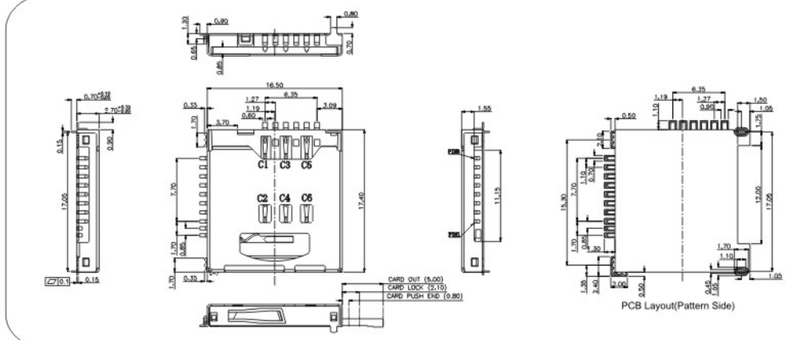

SIM-10A

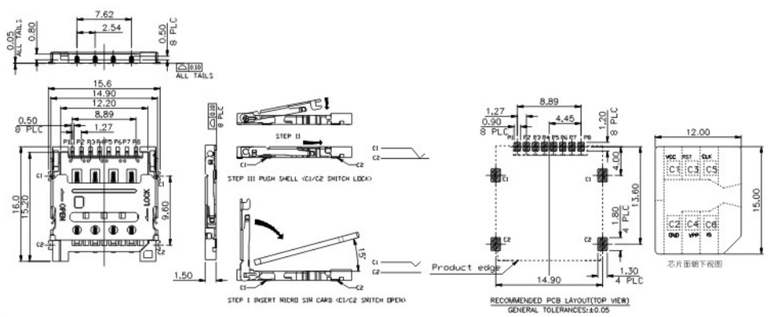

SIM-11A

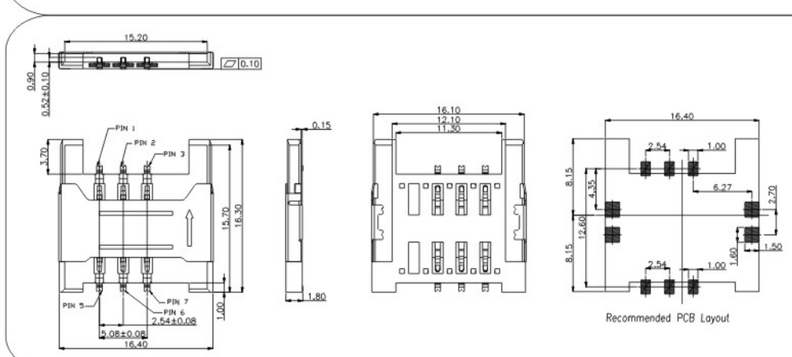

TF-01A

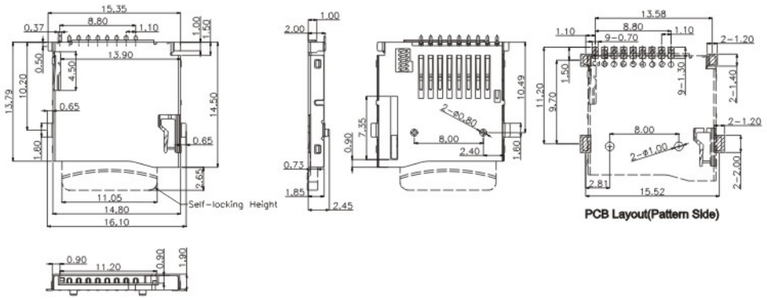

TF-02A

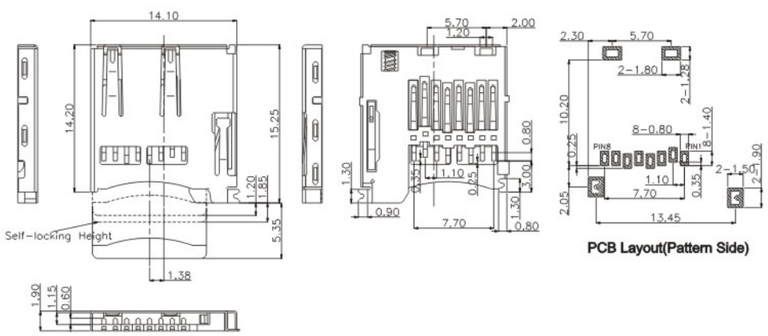

TF-03A

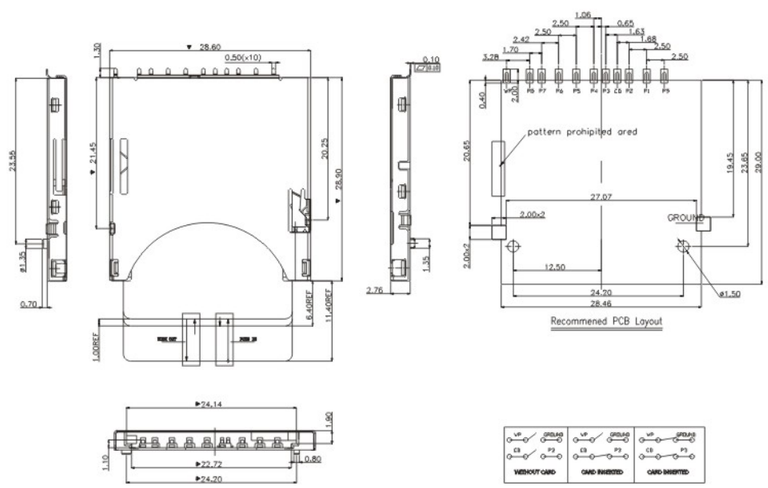

外型图 Dimensions

TF-04A

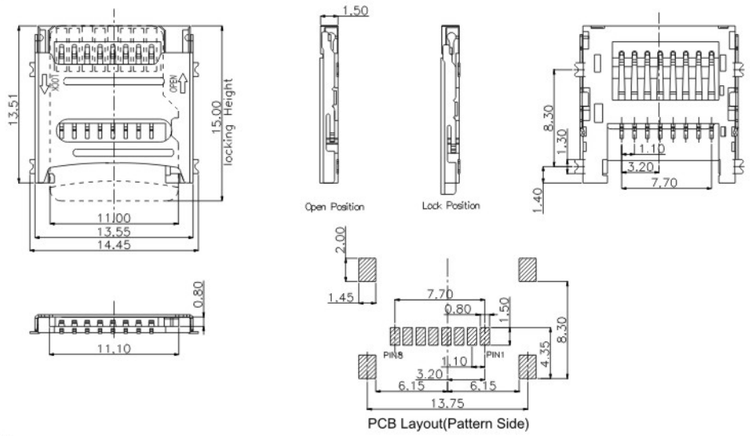

TF-05A

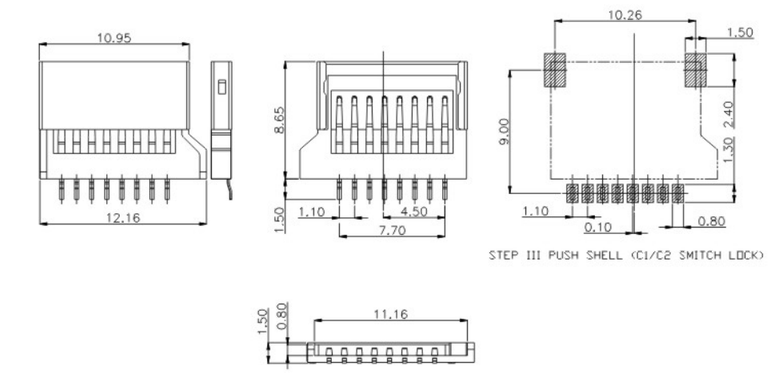

TF-06A

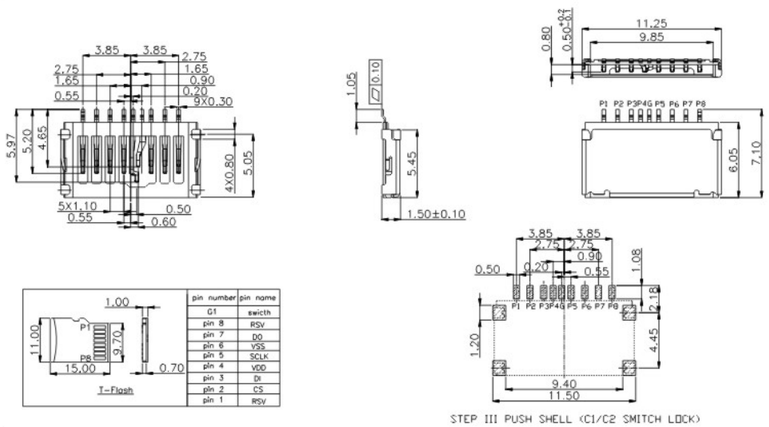

pin number	pin name
G1	swicth
pin 8	RSV
pin 7	D0
pin 6	VSS
pin 5	SCLK
pin 4	VDD
pin 3	DI
pin 2	CS
pin 1	RSV