TRANSI STOR (PNP)	SOT-23 Plastic-Encapsulate Transistors

SOT-23

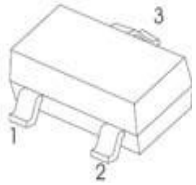

1.BASE
2.EMITTER
3.COLLECTOR

Equivalent Circuit:

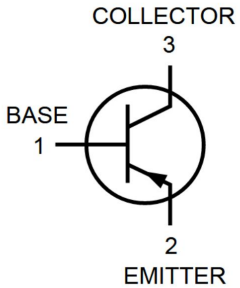

Features

※ Ideaiiy suited for automatic insertion
※ For switching and AF amplifier applications

MAXIMUM RATINGS (Ta=25℃ unless otherwise noted)

Parameter	Symbol	Value	Unit
Collector-Base Voltage **BC856** **BC857** **BC858**	VCBO	-80 -50 -30	V
Collector-Emitter Voltage **BC856** **BC857** **BC858**	VCEO	-65 -45 -30	V
Emitter-Base Voltage	VEBO	-5	V
Collector Current	IC	-0.1	A
Collector Power Dissipation	PC	225	mW
Thermal Resistance From Junction To Ambient	RΘJA	625	℃/W
Junction Temperature	Tj	150	℃
Storage Temperature	Tstg	-65～+150	℃

DEVICE MARKING:	**BC857A=3E; BC857B=3F; BC857C=3G**
BC856A=3A; BC856B=3B	**BC858A=3J; BC858B=3K; BC858C=3L**

ELECTRICAL CHARACTERISTICS (Ta=25℃ unless otherwise specified)

Parameter	Symbol	Test Condition	Min	Typ	Max	Unit
Collector-base breakdown voltage BC856 BC857 BC858	V(BR)CBO	IC= -10μA, IE=0	**-80** **-50** **-30**			V
Collector-emitter breakdown voltage BC856 BC857 BC858	V(BR)CEO	IC= -10mA, IB=0	**-65** **-45** **-30**			V
Emitter-base breakdown voltage	V(BR)EBO	IE=-1μA, IC=0	-5			V
Collector cut-off current BC856 BC857 BC858	ICBO	VCB=-70 V , IE=0 VCB=-50 V , IE=0 VCB=-30 V , IE=0			-0.1	μA
Emitter cut-off current	IEBO	VEB=-5V , IC=0			-0.1	μA
DC current gain BC856A; 845A; 858A BC856B; 857B; 858B BC857C; BC858C	hFE	VCE=-5V, IC= -2mA	125 220 420		250 475 800	
Collector-emitter saturation voltage	VCE(sat)	IC=-100 mA, IB= -5mA			-0.5	V
Base-emitter saturation voltage	VBE(sat)	IC=-100 mA, IB= -5mA			-1.1	V
Transition frequency	fT	VCE=-5V, IC= -10mA f=100MHz	100			MHz
Collector Current Capacitance	Cob	VCE=-10V, f=1MHz			4.5	pF

TYPICAL ELEC TRICAL AND THERMAL CHARACTERISTICS

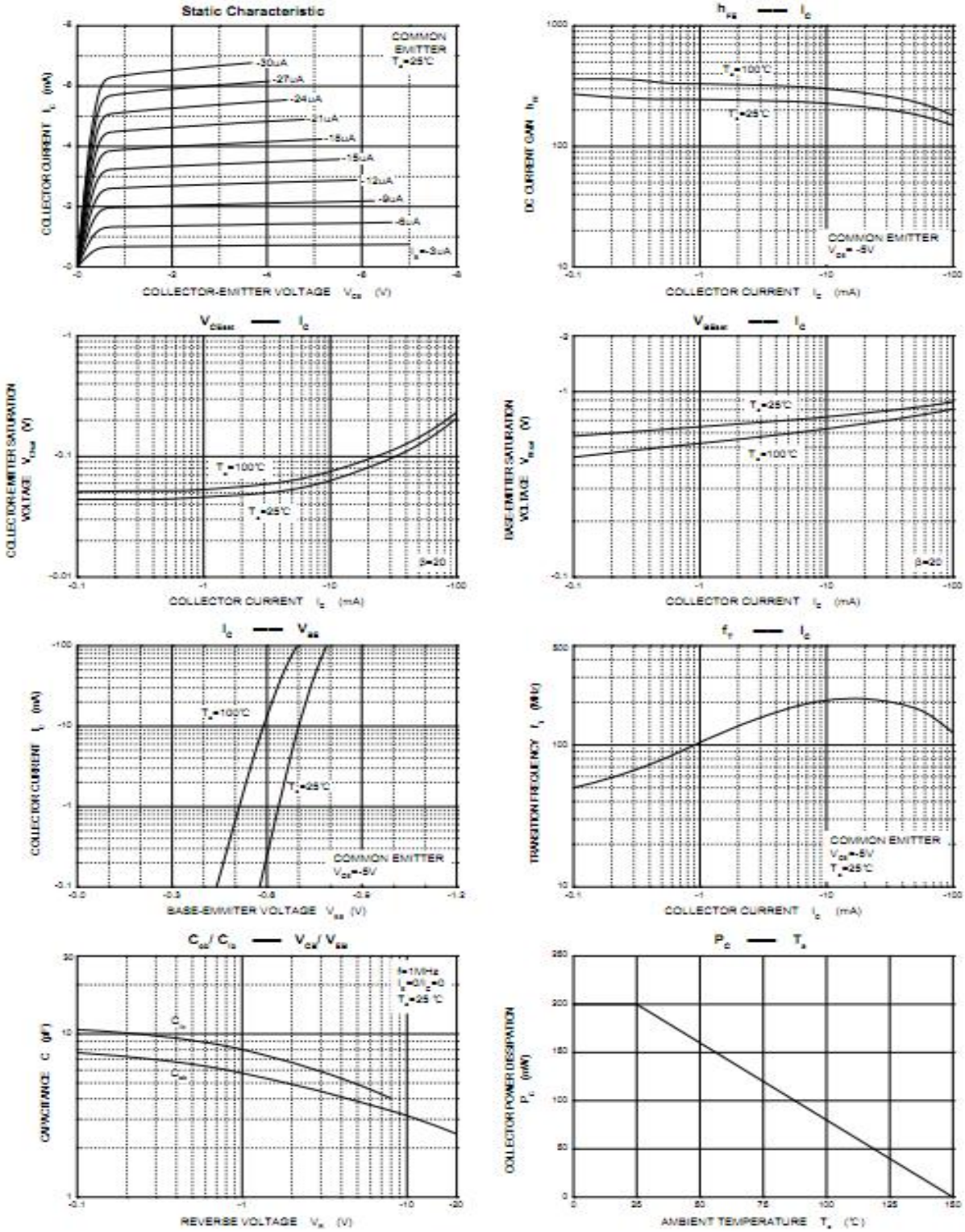

SOT-23 PACKAGE OUTLINE DIMENSIONS

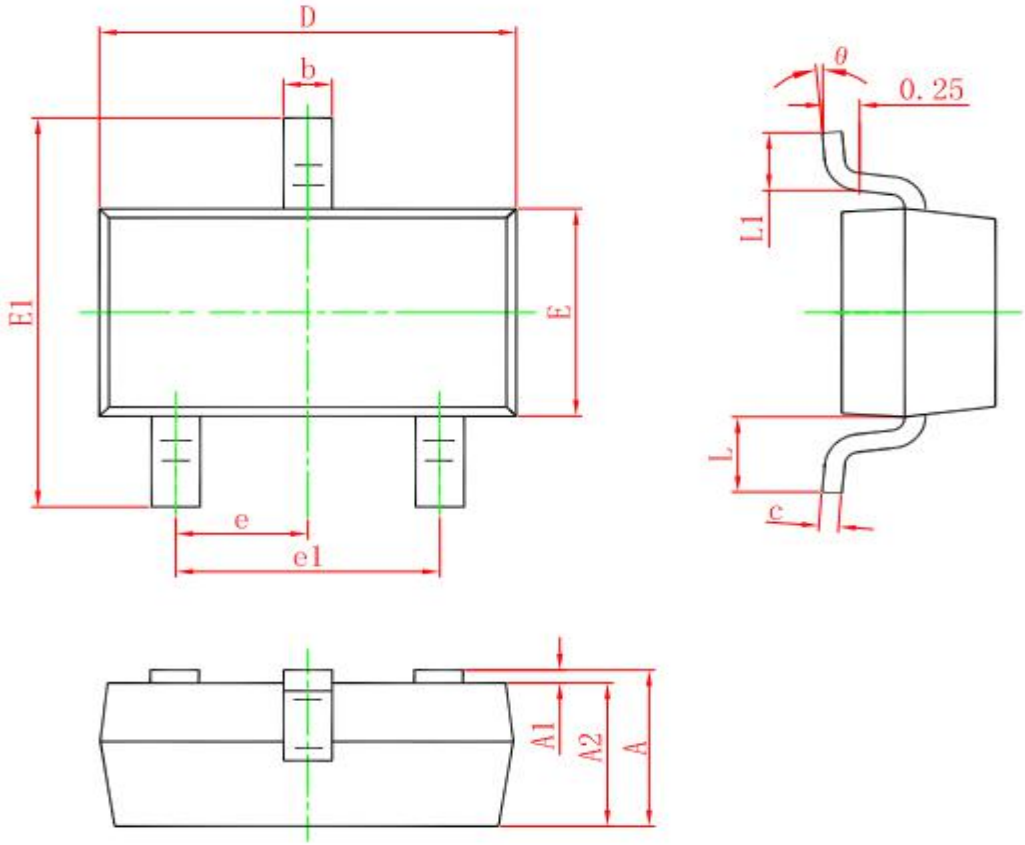

Symbol	Dimensions In Millimeters		Dimensions In Inches	
	Min.	Max.	Min.	Max.
A	0.900	1.150	0.035	0.045
A1	0.000	0.100	0.000	0.004
A2	0.900	1.050	0.035	0.041
b	0.300	0.500	0.012	0.020
c	0.080	0.150	0.003	0.006
D	2.800	3.000	0.110	0.118
E	1.200	1.400	0.047	0.055
E1	2.250	2.550	0.089	0.100
e	0.950 TYP.		0.037 TYP.	
e1	1.800	2.000	0.071	0.079
L	0.550 REF.		0.022 REF.	
L1	0.300	0.500	0.012	0.020
θ	0°	8°	0°	8°