REV	DESCRIPTION	DRW	DATE
A/01		OUXH	2014.09.22

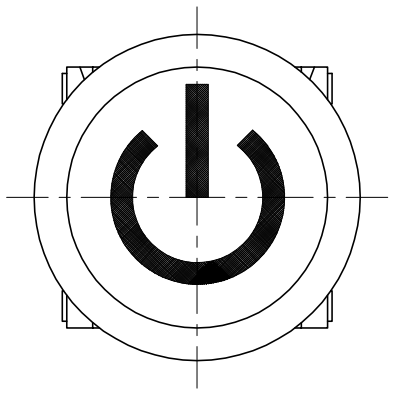

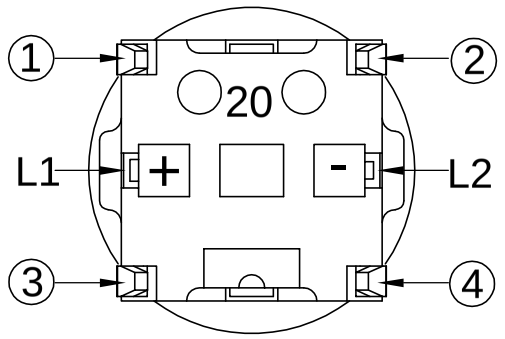

P.C.B LAYOUT

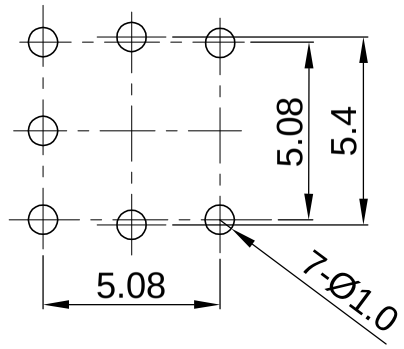

CIRCUIT

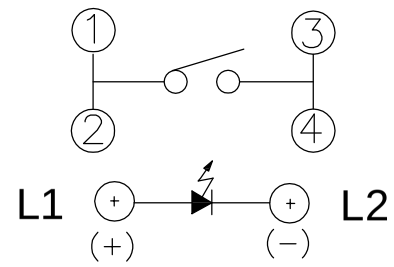

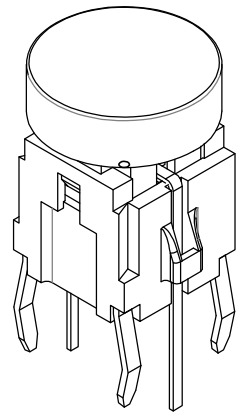

NOTES:
1.RATING: 12VDC 50mA
2.CONTACT RESISTANCE: 100mΩ Max
3.INSULATION RESISTANCE: 100MΩ 250VDC FOR 1MIN
4.DIELECTRIC STRENGTH: 250VAC(50/60Hz) FOR 1MIN
5.LIFE TEST:100,000 CYCLES
6.OPERATION FORCE: 160±50g & 250±80g
7.TRAVEL: 0.25±0.1mm

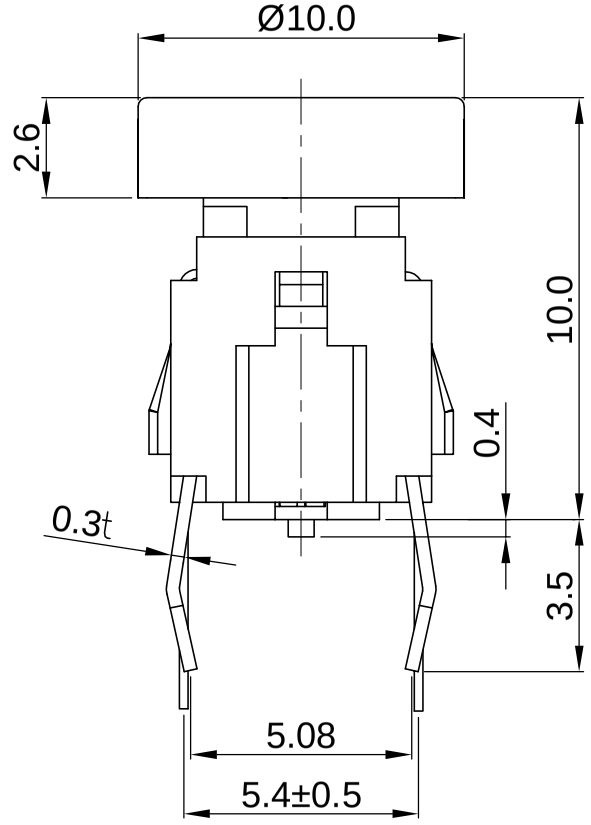

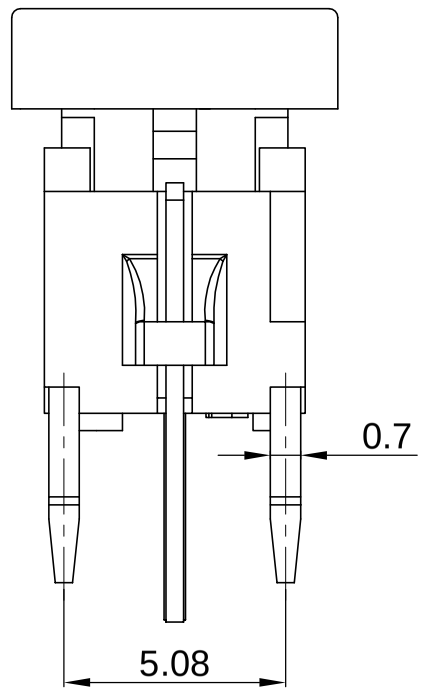

LED COLOR									
1	2	3	4	5	6	12	13	14	23
Red	Yellow	Green	Blue	White	Pure Green	Red Yellow	Red Green	Red Blue	Yellow Green

ITEM	PART NAME	MATERIAL
6	COVER	ABS
5	TERMINAL	H65(C2680)
4	CONTACT	PBS/SUS
3	LED	GaAsP/GaP
2	BUTTON	PA66/POM
1	HOUSING	PA66

KKG 東莞市洋瀚實業有限公司 TEL:0769-82076766 FAX:0769-82076788

TOLERANCE			
UNLESS OTHERWISE STATED			
X.X	±0.25	∠	±0.5°
X.XX	±0.15	UNIT	mm
REV	A/01	SCALE	4:1
SIZE	A4	SHEET	1 OF 1

DRAWN	DATE
OUXH	2014.09.22
CHK'D	DATE
APPV'D	DATE

TITLE	TACT SWITCH
MODEL	PB01-1010L-X-101
MATL	
FINISH	