REV	DESCRIPTION	DRW	DATE
A/03		OUXH	2015.09.07

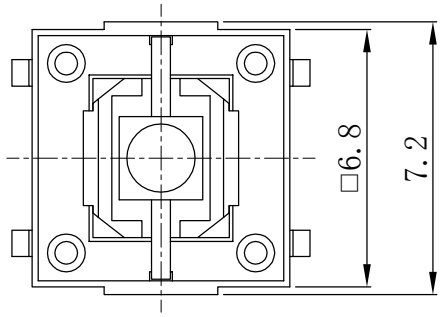

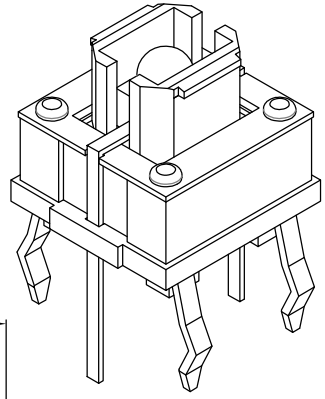

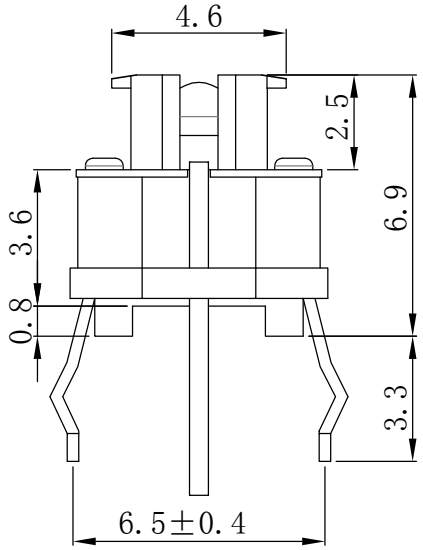

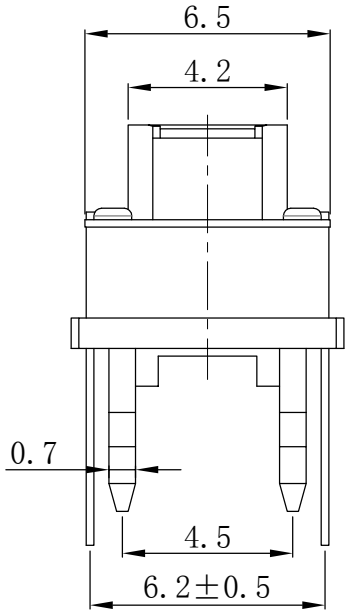

CIRCUIT

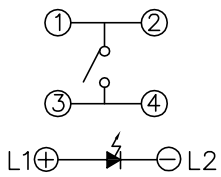

P.C.B LAYOUT

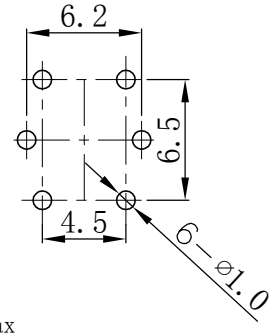

NOTES:
1. RATING: 12VDC 50mA
2. CONTACT RESISTANCE: 100mΩ Max
3. INSULATION RESISTANCE: 100MΩ 250VDC FOR 1MIN
4. DIELECTRIC STRENGTH: 250VAC(50/60Hz) FOR 1MIN
5. LIFE TEST:100,000 CYCLES
6. OPERATION FORCE:250±80g
7. TRAVEL:0.25±0.1mm

LED COLOR								
1	2	3	4	5	6	23	13	12
Red	Yellow	Green	Blue	White	Pure Green	Yellow Green	Red Green	Red Yellow

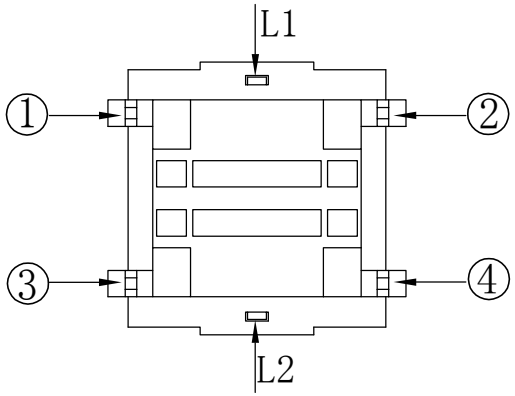

注：开关LED标示颜色的一端为负极端

ITEM	PART NAME	MATERIAL
6	LED	GaASP/GaP
5	COVER	PC
4	TERMINAL	H65(C2680)
3	CONTACT	SUS301
2	BUTTON	PA66
1	HOUSING	PA66

KKG 東莞市洋瀚實業有限公司
TEL:0769-82076766
FAX:0769-82076788

TOLERANCE UNLESS OTHERWISE STATED				DRAWN OUXH	DATE 2015.09.07	TITLE	TACT SWITCH
X.X	±0.25	∠	±2°	CHK'D	DATE	MODEL	TC02-2L-X
X.XX	±0.15	UNIT	mm			MATL	
REV	A/03	SCALE	4:1	APPV'D	DATE	FINISH	
SIZE	A4	SHEET	1 OF 1				