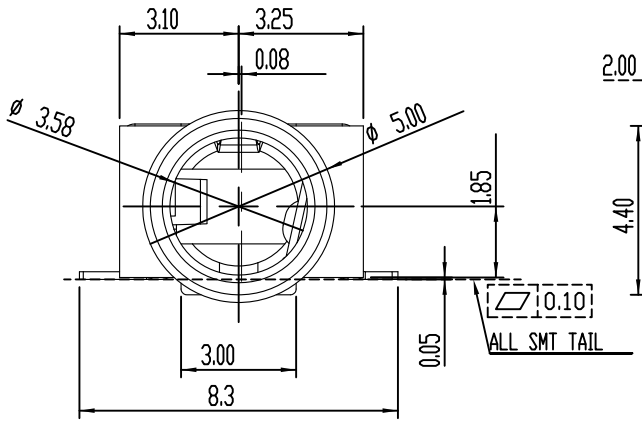

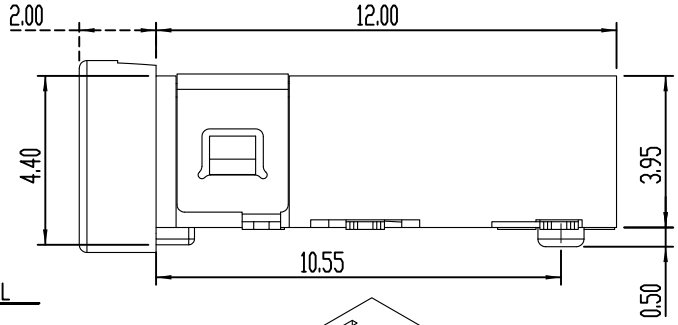

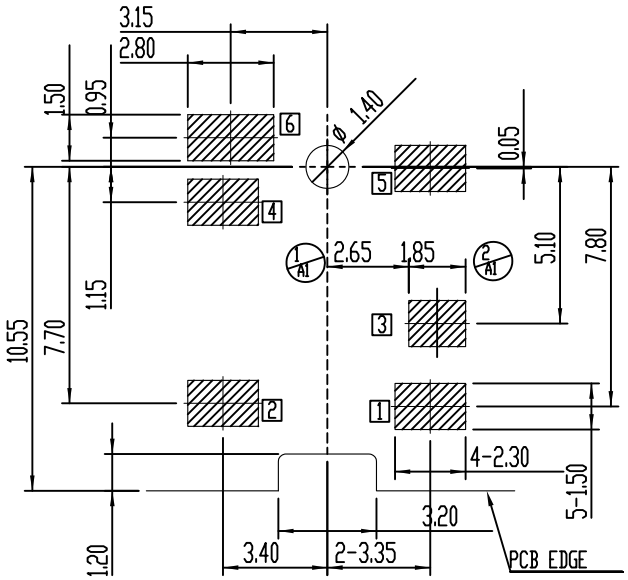

RECOMMENDED PCB LAYOUT(TOP VIEW)
(GENERAL TOLERANCE ± 0.05)

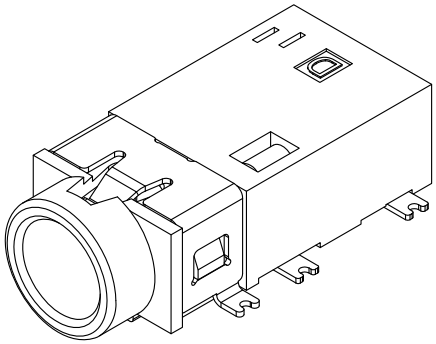

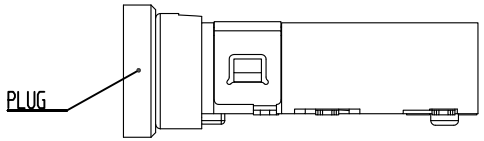

PLUG MATING DRAWING
DETAIL DRAWING(3:1)

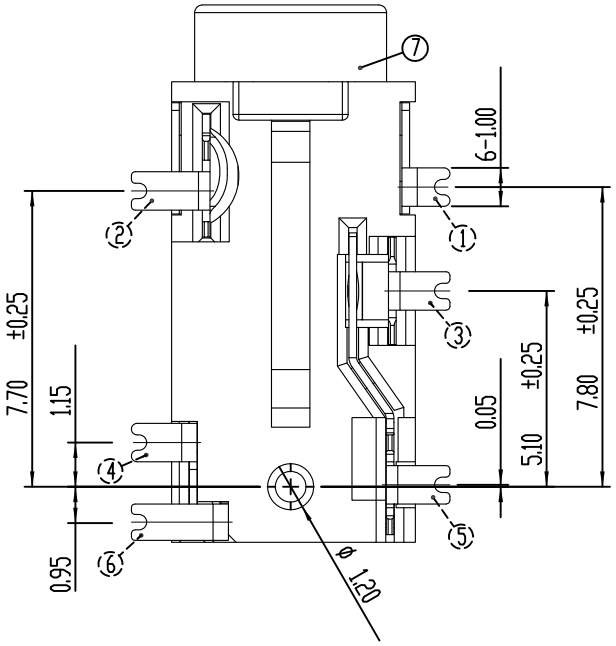

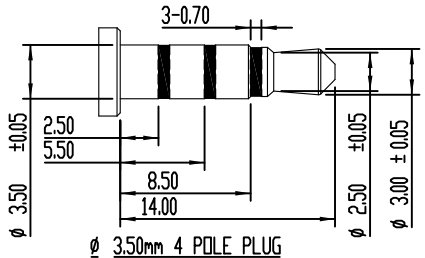

ø 3.50mm 4 POLE PLUG
DETAIL DRAWING(2:1)

NOTES:
1.CONTACT CURRENT RATING:12V 1A.
2. CONTACT RESISTANCE: 50 mΩ MAX.;
3. INSULATION RESISTANCE: 100MΩ MIN.;
4. DIELECTRIC WITHSTANDING: 500V AC MIN.;
5. DURABILITY: 5,000 CYCLES MIN.;
6. CONNECTOR MATING FORCES:
29.4N (3.00Kgf) MAX.;
7. CONNECTOR UNMATING FORCES:
2.94N(0.30Kgf) MIN.;
8.J303-B06G1-W X L2
□:ORANGE
Z:BLACK

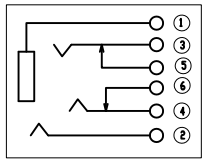

SCHEMATIC

NO.	DESCRIPTION	MAT,L	COLOR	REMARK
7	HOUSING	HIGH TEMP	BLACK	
6	TERMINAL 6	COPPER ALLOY		Au PLATED
5	TERMINAL 5	COPPER ALLOY		Au PLATED
4	TERMINAL 4	COPPER ALLOY		Au PLATED
3	TERMINAL 3	COPPER ALLOY		Au PLATED
2	TERMINAL 2	COPPER ALLOY		Au PLATED
1	TERMINAL 1	COPPER ALLOY		Au PLATED

CUSTOMER COPY

KKG

TITLE: ø 3.50 mm PHONE JACK CONNECTOR

PART NO. PJ-342-4.0

PRODUCT SPEC. JH-RD-W06

C ING FILE NAME. J303-B06G1-WXL2-C

SCALE 5:1 UNIT:mm A4 SHEET: 1 of 1

ECN NO.	REV	DATE	DESCRIPTION	CHANGE	APPRO.
JH2014-016	A1	03/04/'14	变更PCB板3#脚PAD尺寸	韦庆贡	曾 敏
	A	11/13/'13	A版发行		

Angle	±2°	DESIGN	韦庆贡	03/04/'14
X	±0.35	CHECK	徐堂建	03/04/'14
.X	±0.25	APPRO.	曾 敏	03/04/'14
.XX	±0.20			

GENERAL TOLERANCE UNLESS OTHERWISE NOTED

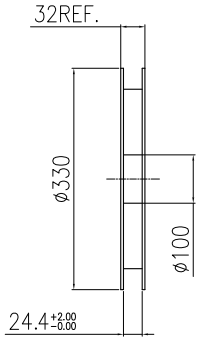

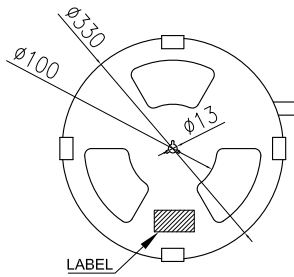

User Direction of Unreeling

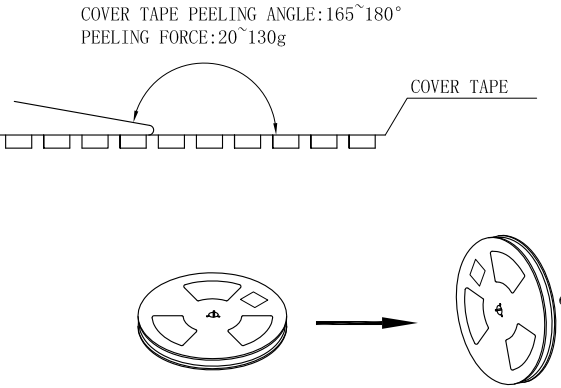

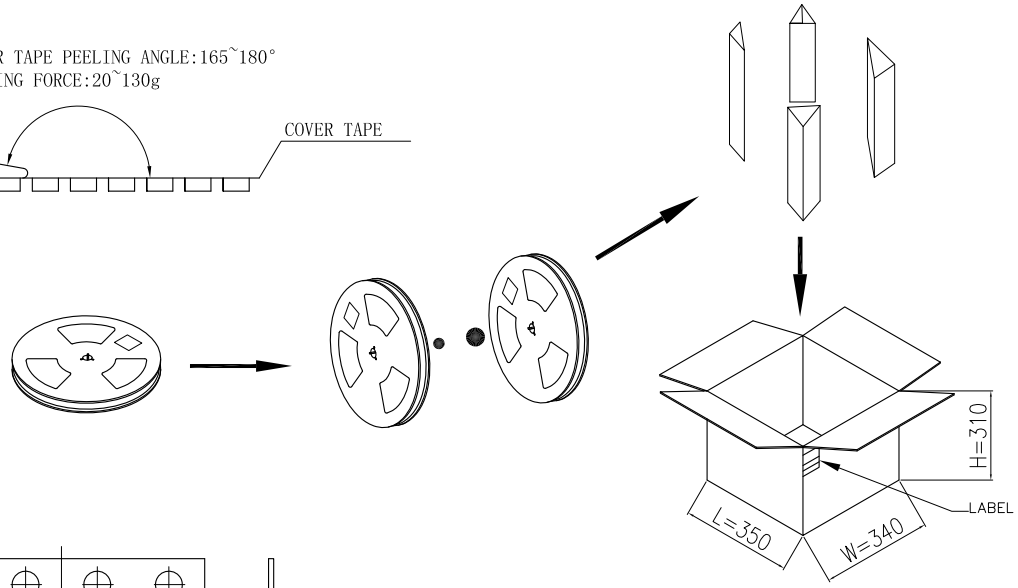

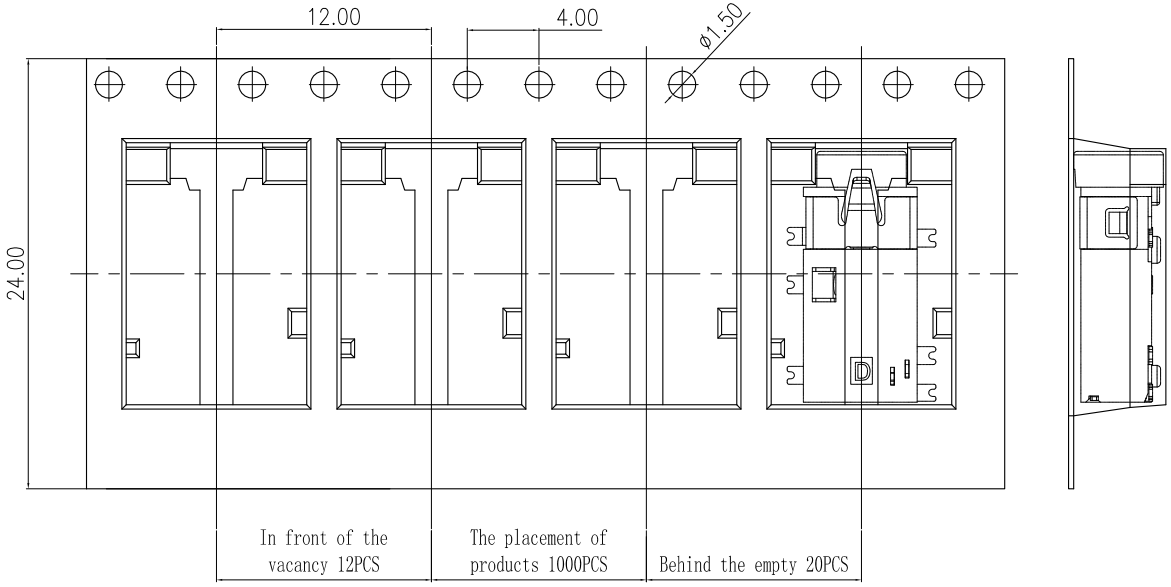

1.Material requirements:

1.1 The carton material requirements for the B=B dimension is 310*340*350MM

1.2 Reel materials for PS; size reel for 330*32

1.3 Tape is made of PS;
Roll shape size bands are 12396*24*5.8mm

2.Packaging requirements:

2.1 The tape into the packing machine, before the empty 12PCS, after the release of the product 1000PCS, Then the empty 20PCS with 300MM length of stay.

2.2 The packaged product from the packaging machine off and packed;

2.3 The tired folded 10 disks in the carton total 10Kset

2.4 Packed finished packing sealing, and in the outer carton label

NO.	DESCRIPTION	MAT,L	COLOR	REEL
1	J303B06G1WZL2	PS	WHITE	PB0011

CUSTOMER COPY	KKG
TITLE:	ø3.50 mm PHONE JACK CONNECTOR
PART NO.	PJ-342-4.0
PRODUCT SPEC.	———
DING FILE NAME.	J303B06G1WZL2-C
SCALE 1:1	UNIT:mm A4 SHEET: 2 of 2

ECN NO.	REV	DATE	DESCRIPTION	CHANGE	APPRO.
———	A	01/11/'13	新版发行	———	———

GENERAL TOLERANCE UNLESS OTHERWISE NOTED

Angle	±2°
X	±0.30
.X	±0.25
.XX	±0.20

DESIGN	叶金生	01/11/'13
CHECK	谭艳斌	01/11/'13
APPRO.	罗志兵	01/11/'13