Product Details for 131 -0140 -0001

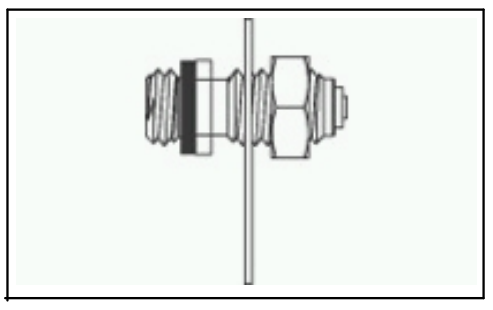

131 -0140 -0001

Tyco Part Number: 3 -1532005 -7

Active

SMB RF Connectors

RoHS Compliant (Statement of Compliance)

Product Highlights:

- Connector
- Jack
- Miniature
- Terminate To Coaxial Cable
- Coupler Style = Threaded

View all Features

Quick Links

Check Pricing & Availability
Search for Tooling
Product Feature Selector
Contact Us About This Product

Documentation & Additional Information

Product Drawings:

- Receptacle Bulkhead Golden Crimp 50 (PDF, English)

Catalog Pages/Data Sheets:

- None Available

Product Specifications:

- None Available

Application Specifications:

- None Available

Instruction Sheets:

- None Available

CAD Files:

- None Available

List all Documents

Additional Information:

- Product Line Information

Related Products:

- Tooling

Product Features

(Please use the Product Drawing for all design activity)

Product Type Features:

- Product Type = Connector
- Gender = Jack
- Connector Series = Miniature
- Body Style = Straight
- Grade = Commercial
- Safety Wire Holes = Without
- Thread Size = 4.83 [.190] -32 UNF -2A
- Body Material = Brass
- Dielectric Material = TEFLON
- Comment = No Nut or Solder Lug, Threads into Panel

Mechanical Attachment:

- Panel Attachment = With
- Panel Attachment Style = Front Mount
- Panel Attachment Method = Threaded

Electrical Characteristics:

- Connector Impedance (?) = 50
- Environmental Seal = Without
- Solderless = No

Termination Related Features:

- Coaxial Cable Termination Type = Solder

Body Related Features:

- Coupler Style = Threaded
- Pin Protection = Without
- Solder Lug = Without
- Body Plating = Gold per MIL -G-45204, Type II, Grade C, Class 1
- Terminal Style = Solder Pot

Contact Related Features:

- Center Contact Plating = Gold per MIL -G-45204, Type II, Grade C, Class 1
- Contacts = With

Industry Standards:

- RoHS/ELV Compliance = RoHS compliant, ELV compliant
- Lead Free Solder Processes = Wave solder capable to 240°C, Wave solder capable to 260°C, Wave solder capable to 265°C, Reflow solder capable to 245°C, Reflow solder capable to 260°C, Pin -in-Paste capable to 245°C, Pin -in-Paste capable to 260°C
- RoHS/ELV Compliance History = Always was RoHS compliant

Conditions for Usage:

- Terminate To = Coaxial Cable

Other:

- Brand = Microdot

© 2006 Tyco Electronics Corporation All Rights Reserved