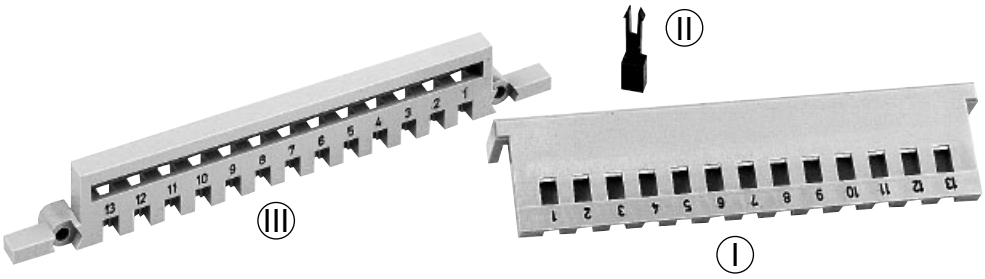

Coding

Identification	Part No.	Drawing	Dimensions in mm
Code comb for shell housing[3] (can also be used as a blanking cover) (I)	09 06 000 9984[f]	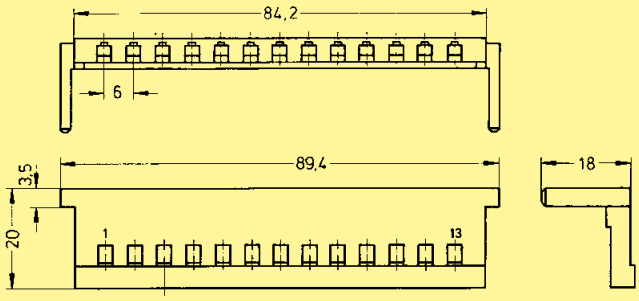	
Coding pin[3] (II) [1] Order 13 pieces per code comb	09 06 001 9905[1]	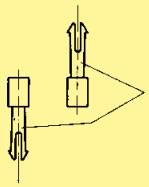 Order 13 pieces per code comb	
Code comb for male connectors[3] (III)		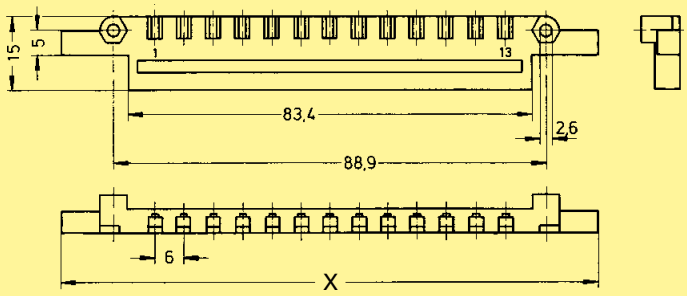	
short version for a full metal locking lever	09 06 000 9985[f]		
	09 06 001 9985[f]		
with nut M2.5	09 06 001 9995[f]		
Mounting possibilities for the code comb in the shell housing D 20/2		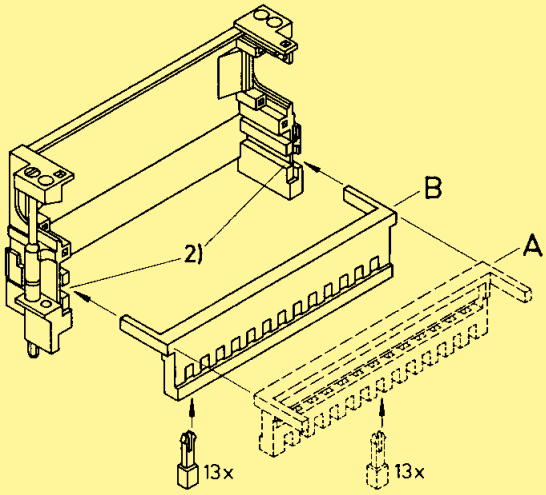	

X
110
92

[2] Use the lower slot when coding the male connector with fixing brackets

Mounting example **A** max. cable entry ø 14 mm to the top, see page 20.25

Mounting example **B** max. cable entry ø 14 mm to the bottom, see page 20.25

[3] Fits D 20/2 and D 20/4

[f] Railway classification NFF 16-101, Smoke index: F1, Flammability class: I2