MICRO SWITCH
a Honeywell Division
FED. MFG. CODE 91929

WIRE HARNESS/ RETAINER CLIP

CATALOG LISTING
20PCWHRC

THIS DRAWING COVERS A PROPRIETARY ITEM AND IS THE PROPERTY OF MICRO SWITCH. A DIVISION OF HONEYWELL. THIS DRAWING IS NOT TO BE COPIED OR USED WITHOUT THE APPROVAL OF MICRO SWITCH

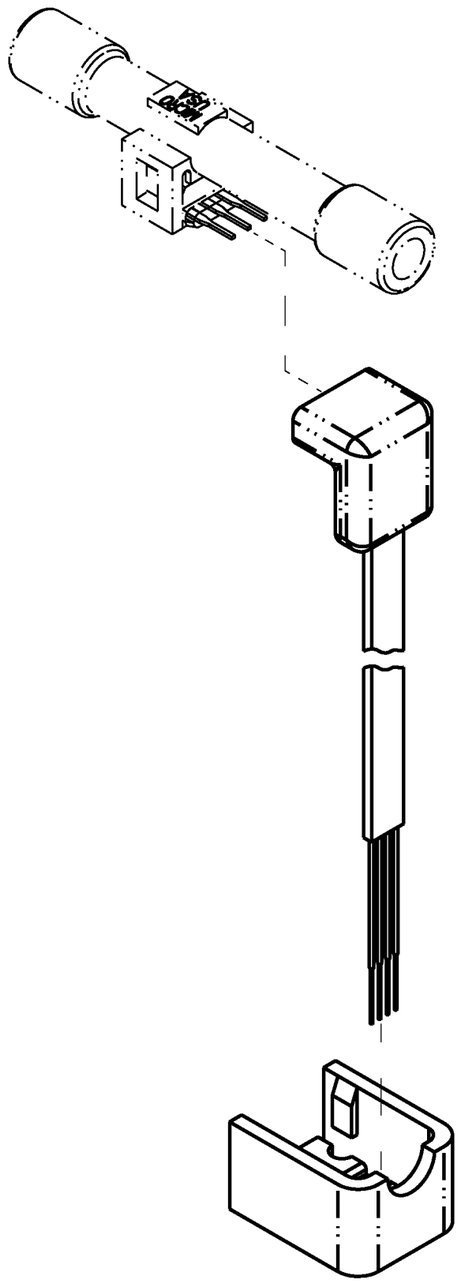

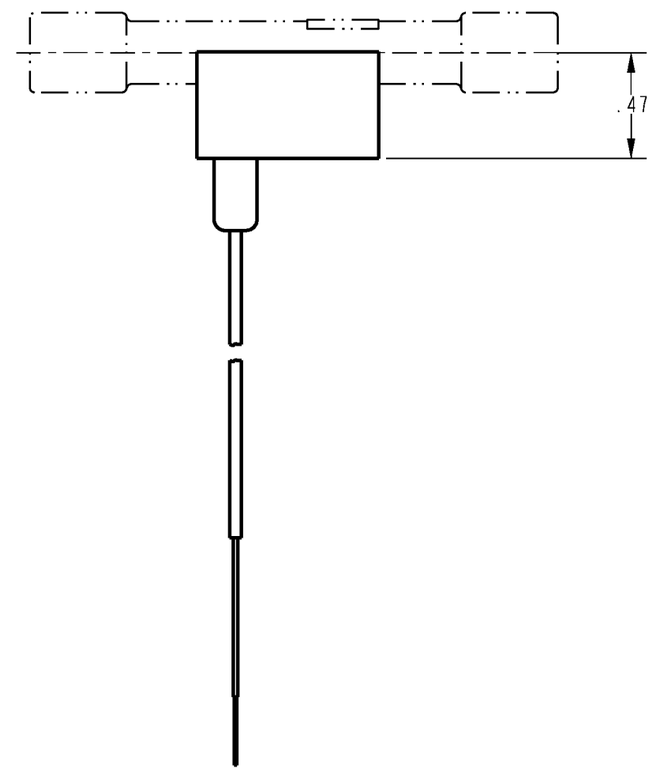

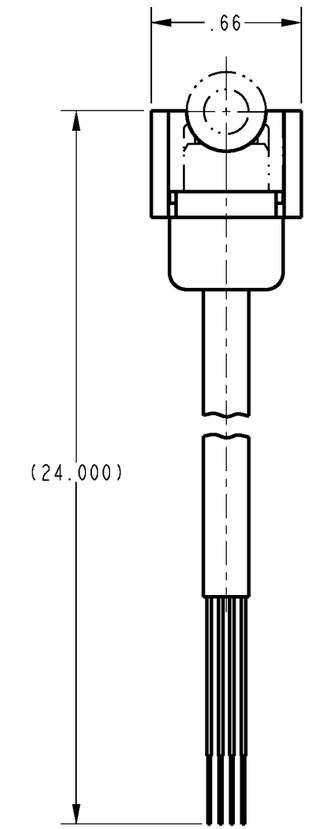

THIRD ANGLE PROJECTION

SCALE NONE

DO NOT SCALE PRINT

UNLESS OTHERWISE SPECIFIED TOLERANCES ARE

ONE PLACE	(.0)	±.030
TWO PLACE	(.00)	±.015
THREE PLACE	(.000)	±.005
ANGLES		±

WEIGHT

ANSI Y14.5M-1982 APPLIES

20PCWHRC
CATALOG LISTING
PAGE 1 OF 1
RELEASE NO. PR-22185
REPLACES
ISSUE 1
CHECK
REVISIONS
CHECK
CHECK
CHECK
DRAWN T R F 10 JUL 96
PTC/CAD