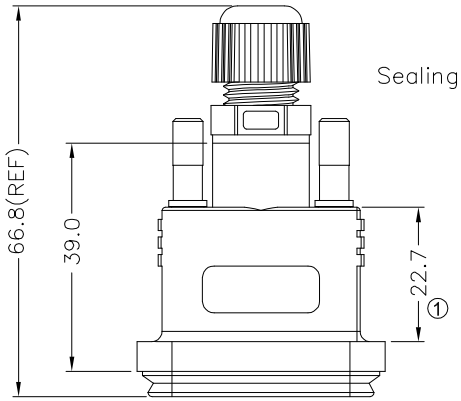

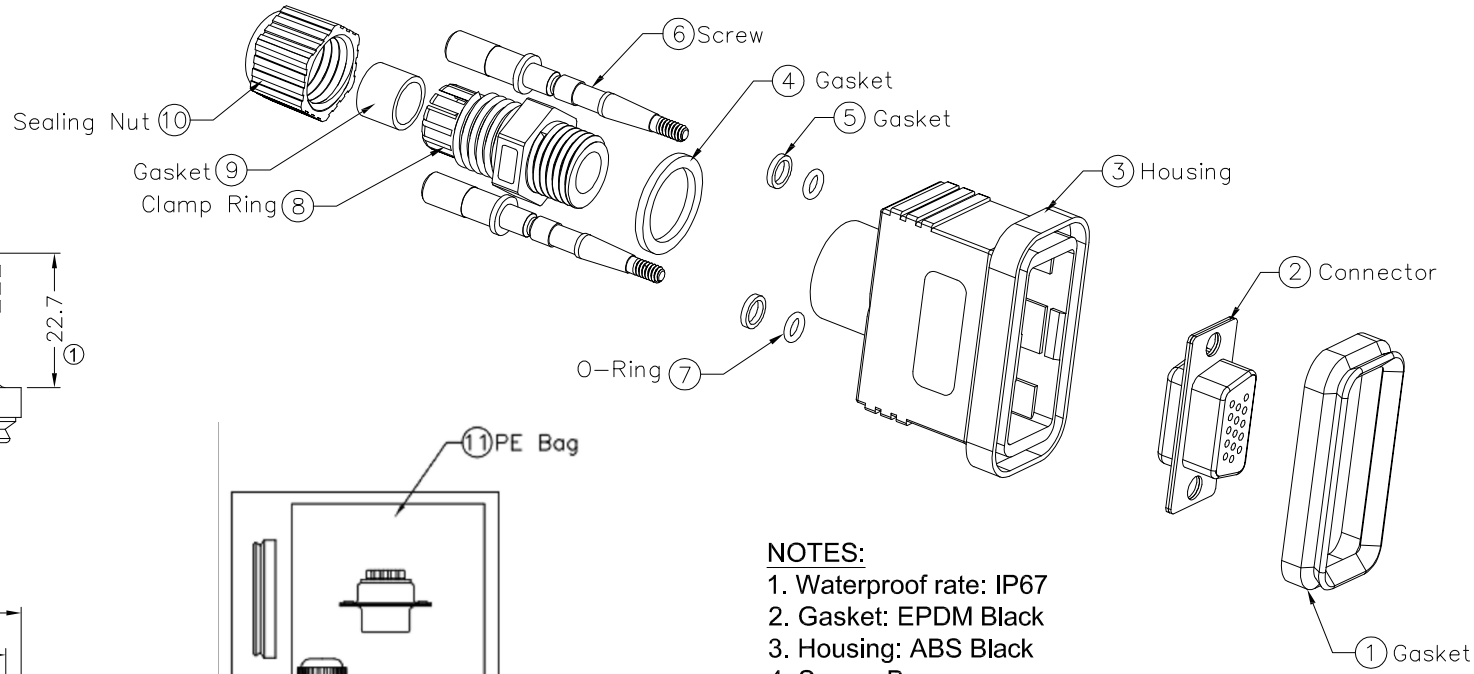

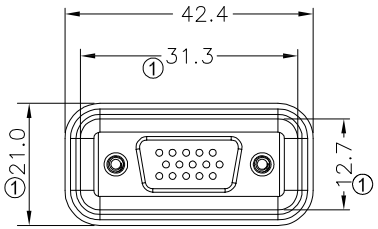

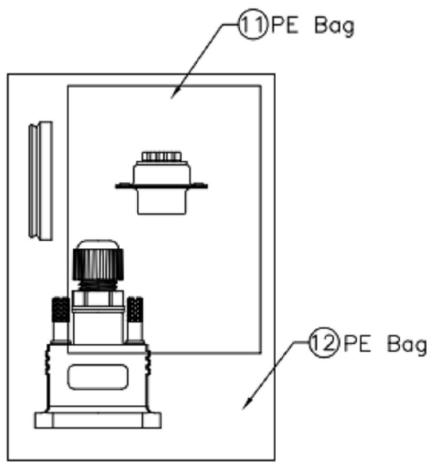

NOTES:
1. Waterproof rate: IP67
2. Gasket: EPDM Black
3. Housing: ABS Black
4. Screw: Brass
5. O-ring: Silicone Clear
6. Body: Nylon Black
7. Sealing Nut: Nylon Black
8. Connector: HD-Sub 15Pin Female, in full gold plated ①
9. Seals for Cable OD:ϕ3.5mm-ϕ7.0mm
10. One Set Unassembled in One Zipper Bag

RoHS compliant
Unit: mm

Scale	FREE					Date	Name	Customer-No.
TOLERANCE					Drawn	03.04.2018	Tom	
	±0.5				Approved	03.04.2018	Amy	ASSMANN WSW-No. A-HDF15-HOOD-WP
DIM	TOL	①	Cancel "A" LOGO&correct dimensions	03.04.2018	Tom			Drawing-No. ASS 6614 CA rev01
		⓪	Drawn	16.10.2014	Joanna			
Angle	TOL	Id.	Modification	Date	Name			Replace / Sheet

ASSMANN wsw components