版 本	变 更 内 容	工程确认	日 期

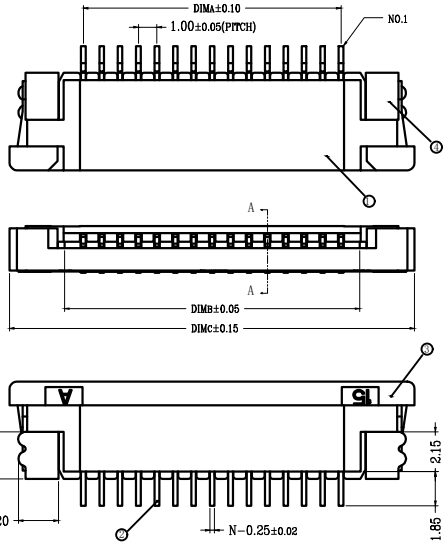

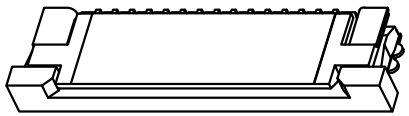

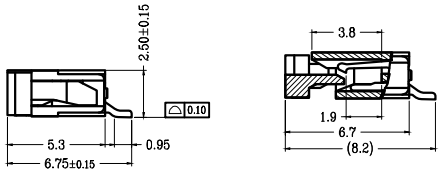

SECTION A-A

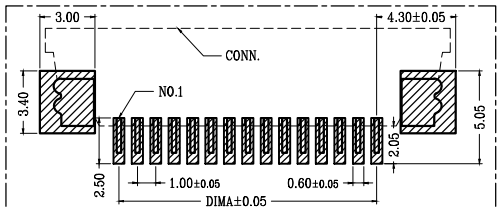

适用线路板(PCB LAYOUT)

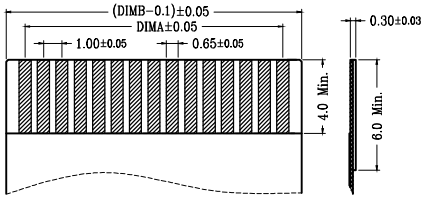

适用扁平线(Applicable Flat Cable)

CKT	DIMA	DIMB	DIMC
4	3.00	5.30	11.10
5	4.00	6.30	12.10
6	5.00	7.30	13.10
7	6.00	8.30	14.10
8	7.00	9.30	15.10
9	8.00	10.30	16.10
10	9.00	11.30	17.10
11	10.00	12.30	18.10
12	11.00	13.30	19.10
13	12.00	14.30	20.10
14	13.00	15.30	21.10
15	14.00	16.30	22.10
16	15.00	17.30	23.10
17	16.00	18.30	24.10
18	17.00	19.30	25.10
19	18.00	20.30	26.10
20	19.00	21.30	27.10
21	20.00	22.30	28.10
22	21.00	23.30	29.10
23	22.00	24.30	30.10
24	23.00	25.30	31.10
25	24.00	26.30	32.10
26	25.00	27.30	33.10
27	26.00	28.30	34.10
28	27.00	29.30	35.10
29	28.00	30.30	36.10
30	29.00	31.30	37.10
31	30.00	32.30	38.10
32	31.00	33.30	39.10
33	32.00	34.30	40.10
34	33.00	35.30	41.10
35	34.00	36.30	42.10
36	35.00	37.30	43.10
37	36.00	38.30	44.10
38	37.00	39.30	45.10
39	38.00	40.30	46.10
40	39.00	41.30	47.10

技术指标(Technical Index):

1.塑件表面应光洁、无毛边、无明显收缩、 缺陷、裂纹等现象.
(The surface of the plastic parts should be smooth,no rough edges,no obvious shrinkage,defects,cracks and other phenomena.)
2.温度范围(Temperature range): -25° C～+85° C.
3.额定电压(Rated voltage): 50V, AC/DC(=等效).
4.接触电阻(Contact resistance): ≤0.03 Ω.
5.绝缘电阻(Insulation resistance):≥500M Ω.
6.产品料号(Product material No.):

BTC10251—** * *—**

00	后盖有LOGO:WD
0W	后盖无LOGO
0N	后盖无LOGO,焊片雾锡

NO OF CKT(产品PIN数)

Plating(电镀方式)
0:端子全雾锡(Terminal all mist tin)
1:端子全金(G/F OVERALL)
4:端子全亮锡(Terminal all bright tin)

Packing(包装方式)
T:TUBE管装
R:TAPE & REEL卷装

序号	品名	材质
①	1.0K型胶芯(H2.5) 1.0K Type Housing (H2.5)	LCP UL94V-0 本色 Natural
②	1.0K型上接端子(H2.5) 1.0K Type Upper Terminal(H2.5)	铜合金/表面镀锡 Copper Alloy/ Tin Plating
③	1.0K型卧式后盖(H2.5) 1.0K Type Actuator (H2.5)	LCP UL94V-0 黑色 Black
④	1.0K型卧式焊片(H2.5) 1.0K Type Fitting Nail (H2.5)	铜合金/表面镀锡 Copper Alloy/ Tin Plating

东莞博众 DGBZ ELECTRIC 东莞市博众电气有限公司
Dongguan Bozhong Electrical Co., Ltd

品名(ITEM NO)	1.0 Pitch K型卧式上接(H=2.5)	页码(SHEET)	1/1
料号(PART NO)	BTC10251-****-**LW	版本(REV)	A1
图号(DWG NO)		日期(DATE)	2021.10.12
		设计(DESIGN)	LUO
		审核(CHECKED)	ROGER LI
		核准(APPROVED)	ROC ZHAO

单位(UNIT): MM
比例(SCALE)
一般公差
. ±0.50 .XX ±0.10
.X ±0.20 .XXX ±0.05
ANGLES.X° ± 1°

These drawings and specifications are Dongguan Bozhong Technology Co Ltd.The property should not be copied. Without Dongguan Bozhong Technology Co. Ltd.Prior written consent to copy or use in any way. Email at info@bozhongelectric.com