CAMBLOCK

5mm Pitch Low Profile Rising Clamp Terminal Blocks

- 2-12 pole double Interlocking mechanism for increased strength
- 4-12 pole solid block and end stackable
- Moulded in green UL94-V0 flame retardant PA66
- Professional rising clamp terminals
- 0.128mm²-1.23mm² (26- 16AWG) solid cable/ stranded cable
- Captive screws
- c UL us approved

CTB0502

SPECIFICATION	
Rating	*10A/300V*
Insulation resistance	*5000M Ω/1000V*
Withstand voltage	*AC1500V/1min*
Contact resistance	*20mΩ (max)*
Working temperature	*-33°C to 120+°C*
Mouldings	*UL94-V0 flame retardant PA66*
Screw/torque	*M2.5 steel, nickel plated 0.4Nm*
Recommended PCB hole size	*ø1.4mm*
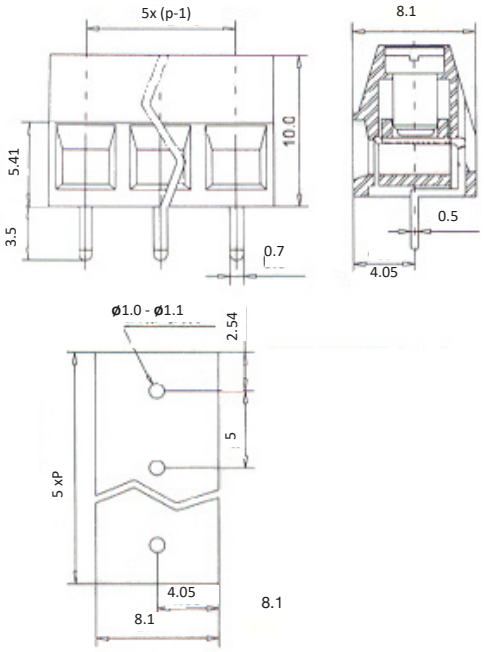
TYPE NO.	POLES	LENGTH
CTB0502/2	*2*	*10mm*
CTB0502/3	*3*	*15mm*
CTB0502/4	*4*	*20mm*
CTB0502/5	*5*	*25mm*
CTB0502/6	*6*	*30mm*
CTB0502/7	*7*	*35mm*
CTB0502/8	*8*	*40mm*
CTB0502/9	*9*	*45mm*
CTB0502/10	*10*	*50mm*
CTB0502/11	*11*	*55mm*
CTB0502/12	*12*	*60mm*