826847-3 Product Details

Live Product Chat

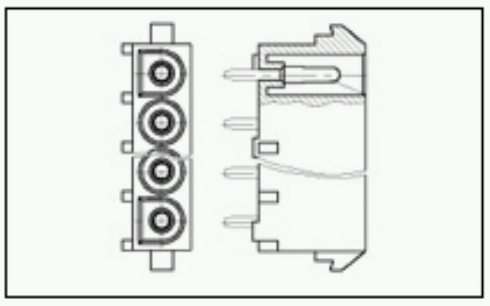

826847-3

TE Part Number: 826847-3
Active
Add to Part List

.250" Centerline, 600 V, 19 - 36 A max

Always EU RoHS/ELV Compliant (Statement of Compliance)

Product Highlights:
- Header
- Universal MATE-N-LOK
- Not CompactPCI
- 6.35 mm Centerline, Matrix
- Number of Circuits = 3

View all Features | Find Similar Products

Quick Links
- Check Pricing & Availability
- Search for Tooling
- Product Feature Selector
- Contact Us About This Product
- Request Samples NEW!

Documentation & Additional Information

Product Drawings:
- UMNL IN LINE PC. HEADER ASSY (PDF, English)

Catalog Pages/Data Sheets:
- None Available

Product Specifications:
- None Available

Application Specifications:
- None Available

Instruction Sheets:
- None Available

CAD Files: (CAD Format & Compression Information)
- 2D Drawing (DXF, Version M1)
- 3D Model (IGES, Version M1)
- 3D Model (STEP, Version M1)

List all Documents

Additional Information:
- Product Line Information

Related Products:
- Tooling

Product Features (Please use the Product Drawing for all design activity)

Product Type Features:
- Product Type = Header
- Connector Line = Universal MATE-N-LOK
- Number of Circuits = 3
- Mount = PCB Thru Mount
- Color = Brick Red
- Lock Type = Positive Lock
- PCB Polarized = Non-Polarized
- PCB Thickness (mm [in]) = 1.60 [0.063]
- Mount Angle = Vertical

Electrical Characteristics:
- High Current = No
- Current Rating (Amps.) = 19
- Voltage (VAC) = 600

Termination Related Features:
- Termination (Solder) Post Length (mm [in]) = 4.19 [0.165]

Body Related Features:
- Centerline, Matrix (mm [in]) = 6.35 [.250]

Contact Related Features:
- CompactPCI = No
- Contact Layout = In-Line
- Contact Type = Socket
- Contact Material = Phosphor Bronze
- Sealable = No
- Contact Mating Area Plating Material = Tin

Housing Related Features:
- Housing Material = Polyamide
- Housing Flammability Rating = UL 94V-0

Industry Standards:
- RoHS/ELV Compliance = RoHS compliant, ELV compliant
- Lead Free Solder Processes = Wave solder capable to 240°C
- RoHS/ELV Compliance History = Always was RoHS compliant

Other:
- Brand = AMP

© 2008 Tyco Electronics Corporation All Rights Reserved