Cute Cute-3 series

Ordering number	**C10754**
Description	**C10754_Cute-3-SS-XM**

Family	Cute	FWHM	19 degrees
Type	Lens	Efficiency	-
LED	XM-L	cd/lm	-
Color	Transparent	Gerber File	Available
Diameter	35 mm		
Height	15 mm		
Style	Round		
Optic Material	PMMA		
Holder Material	-		
Fastening	Glue, pin		
Status	Ready		

Ordering number	**C10755**
Description	**C10755_Cute-3-M-XM**

Family	Cute	FWHM	25 degrees
Type	Lens	Efficiency	-
LED	XM-L	cd/lm	-
Color	Transparent	Gerber File	Available
Diameter	35 mm		
Height	15 mm		
Style	Round		
Optic Material	PMMA		
Holder Material	-		
Fastening	Glue, pin		
Status	Ready		

Ordering number	**C10756**
Description	**C10756_Cute-3-W-XM**

Family	Cute	FWHM	0 degrees
Type	Lens	Efficiency	-
LED	XM-L	cd/lm	-
Color	Transparent	Gerber File	Available
Diameter	35 mm		
Height	15 mm		
Style	Round		
Optic Material	PMMA		
Holder Material	-		
Fastening	Glue, pin		
Status	Ready		

Ordering number	**C11333**
Description	**C11333_Cute-3-SS-XM**

Family	Cute	FWHM	19 degrees
Type	Lens	Efficiency	-
LED	XM-L	cd/lm	-
Color	Transparent	Gerber File	Available
Diameter	35 mm		
Height	15 mm		
Style	Round		
Optic Material	PMMA		
Holder Material	-		
Fastening	Glue, pin		
Status	Ready		

Ledil Oy
Salorankatu 10
24240 SALO
Finland

http://www.ledil.com
email: ledil@ledil.com
FAX: +358-2-733 8001

Cute Cute-3 series

Ordering number	**C11334**
Description	**C11334_Cute-3-M-XM**

Family	Cute	FWHM	25 degrees
Type	Lens	Efficiency	-
LED	XM-L	cd/lm	-
Color	Transparent	Gerber File	Available
Diameter	35 mm		
Height	15 mm		
Style	Round		
Optic Material	PMMA		
Holder Material	-		
Fastening	Glue, pin		
Status	Ready		

Ledil Oy
Salorankatu 10
24240 SALO
Finland

http://www.ledil.com
email: ledil@ledil.com
FAX: +358-2-733 8001

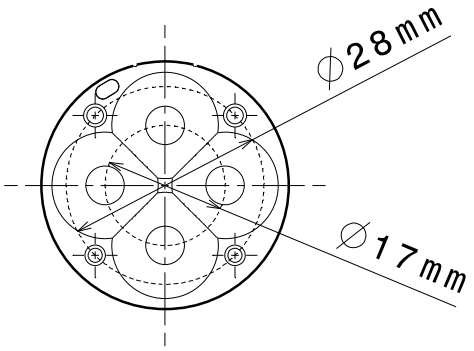

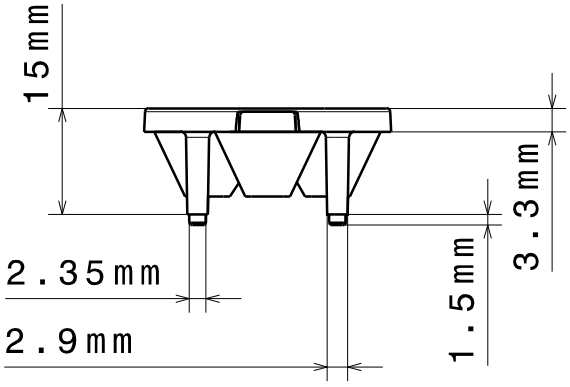

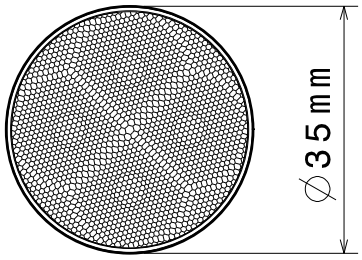

Material: PMMA

This drawing is our property.
It can't be reproduced
or communicated without
our written agreement.

Ledil Oy
Tehdaskatu 13
FIN-24100 SALO
Finland

DRAWN BY: RM	DATE: 05.12.2007	DRAWING TITLE: Cute-4-CSS			
CHECKED BY: HH	DATE: 05.12.2007	SIZE: A4	DRAWING NUMBER: 10446		REV: 0.1
DESIGNED BY: HH	DATE: 05.12.2007	SCALE: 1:1	WEIGHT(g):		SHEET: 1/1

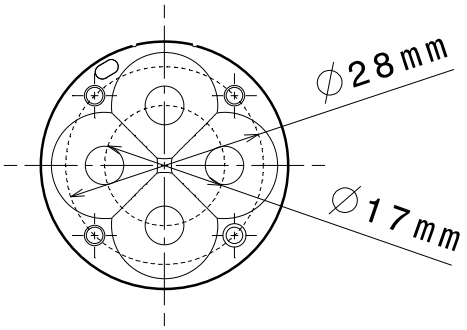

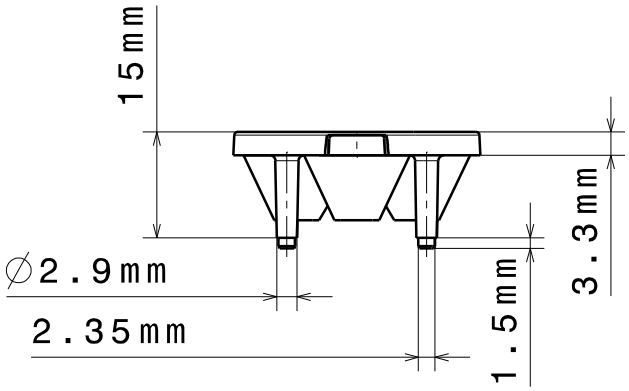

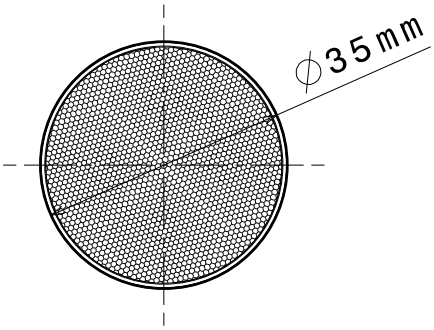

Material: PMMA

This drawing is our property.
It can't be reproduced
or communicated without
our written agreement.

Ledil Oy
Tehdaskatu 13
FIN-24100 SALO
Finland

DRAWN BY: RM	DATE: 07.12.2007	DRAWING TITLE: Cute-4-CM			
CHECKED BY: HH	DATE: 07.12.2007	SIZE: A4	DRAWING NUMBER: 10447		REV: 0.1
DESIGNED BY: HH	DATE: 07.12.2007	SCALE: 1:1	WEIGHT(g):		SHEET: 1/1

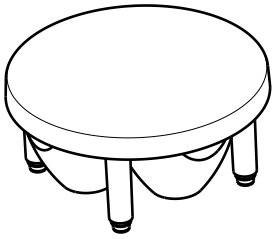

Isometric view
Scale: 1:1

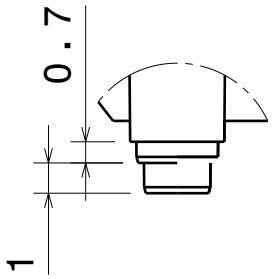

Detail A
Scale: 4:1

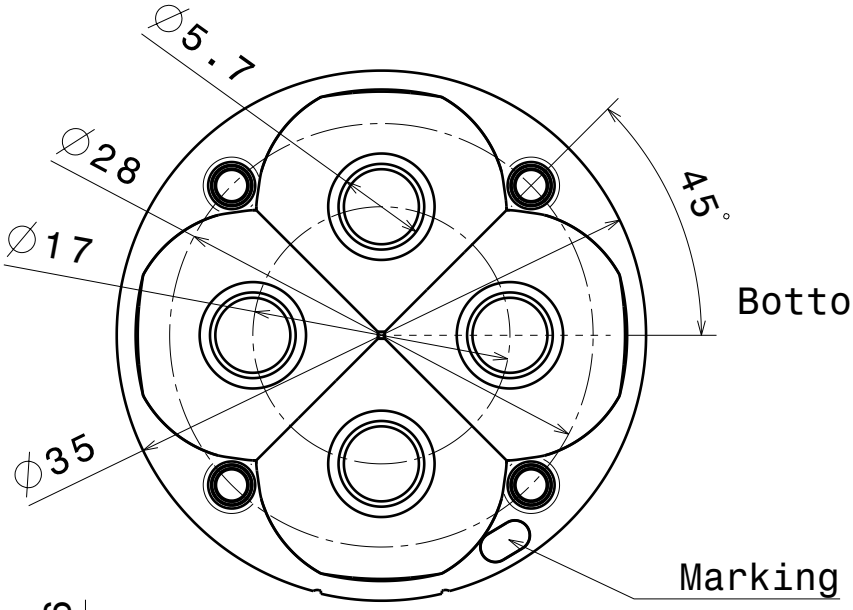

Bottom view

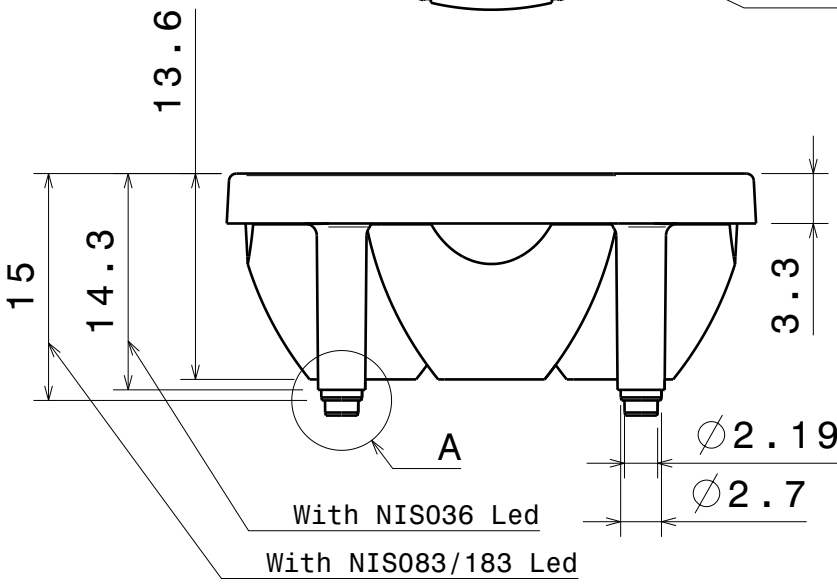

Front view

Material: PMMA

Tolerances:
Dimensions less < 20mm +-0.1mm
Dimensions between (21-45)mm +-0.2mm

This drawing is our property.
It can't be reproduced
or communicated without
our written agreement.

LEDIL

DRAWN BY p	DATE 21.01.2009	DRAWING TITLE Datasheet Cute-4-NIS-M lens			
CHECKED BY t k	DATE 14.12.2008	SIZE A4	DRAWING NUMBER 10812		REV 0.1
DESIGNED BY HH	DATE 14.12.2008	SCALE 2:1	WEIGHT(g)		SHEET 1/1

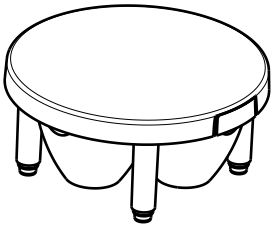

Isometric view
Scale: 1:1

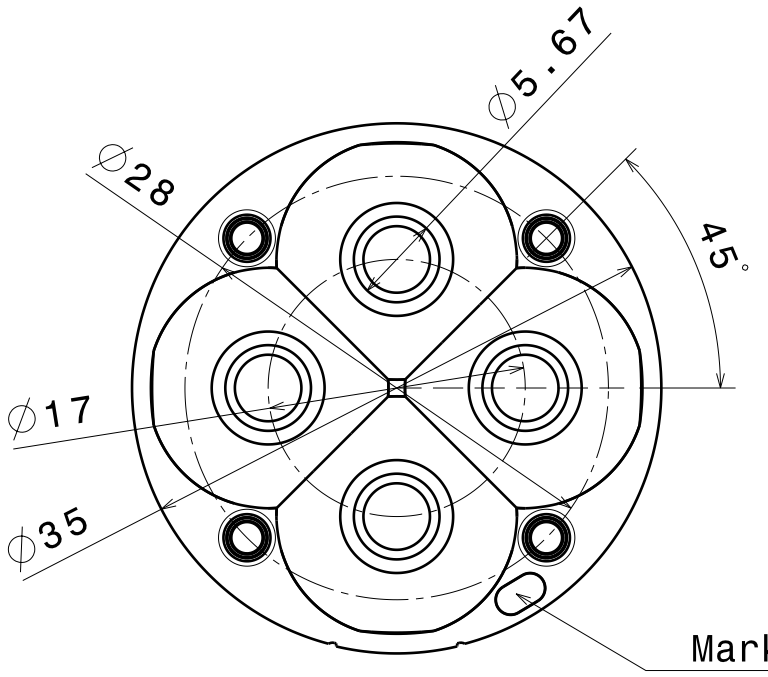

Bottom view

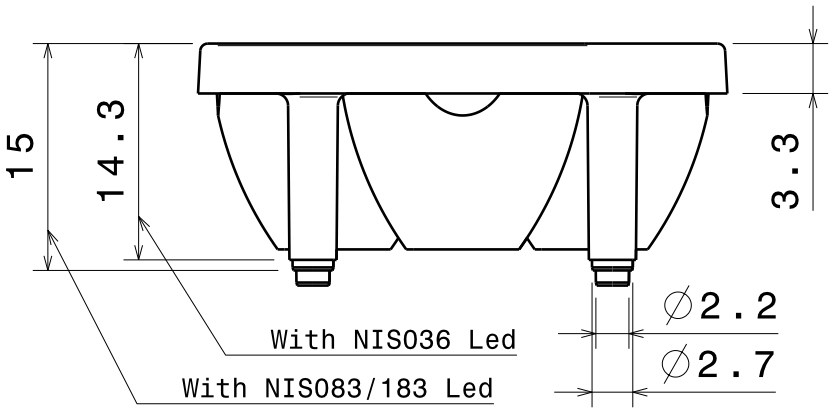

Front view

Material: PMMA

This drawing is our property.
It can't be reproduced
or communicated without
our written agreement.

Ledil Oy
Tehdaskatu 13
FIN-24100 SALO
Finland

DRAWN BY: pv	DATE: 22.01.2009	DRAWING TITLE: Datasheet Cute-4-NIS-W lens			
CHECKED BY: tk	DATE: 14.12.2008	SIZE: A4	DRAWING NUMBER: 10813		REV: 0.1
DESIGNED BY: HH	DATE: 14.12.2008	SCALE: 2:1	WEIGHT(g):		SHEET: 1/1

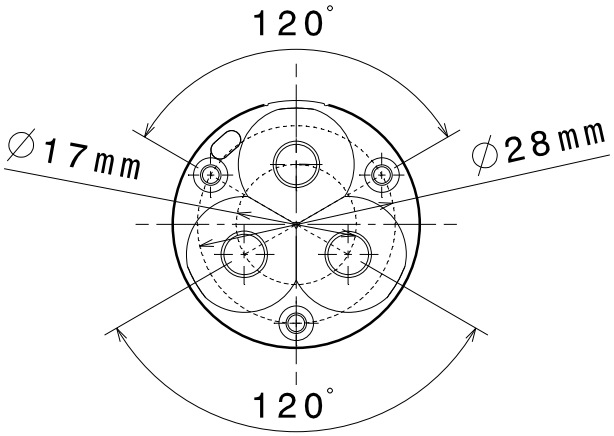

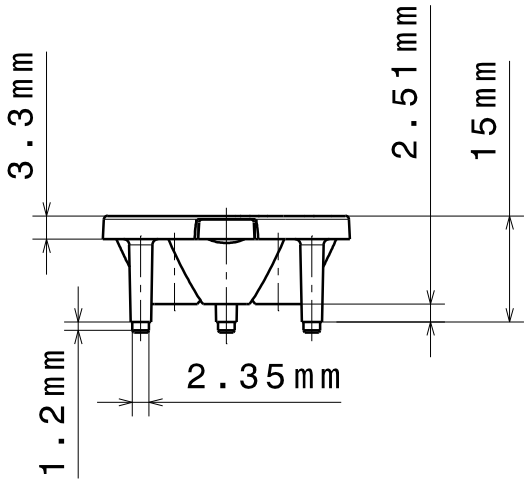

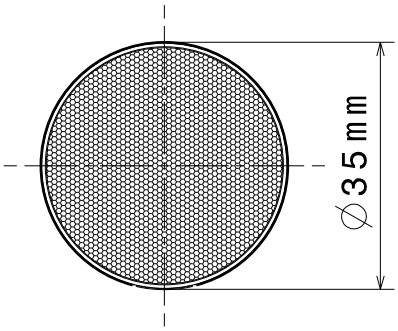

Material: PMMA

This drawing is our property.
It can't be reproduced
or communicated without
our written agreement.

Ledil Oy
Tehdaskatu 13
FIN-24100 SALO
Finland

DRAWN BY: RM	DATE: 31.10.2007	DRAWING TITLE: Cute-3-CM			
CHECKED BY: HH	DATE: 31.10.2007	SIZE: A4	DRAWING NUMBER: 10427		REV: 0.1
DESIGNED BY: HH	DATE: 31.10.2007	SCALE: 1:1	WEIGHT(g):		SHEET: 1/1

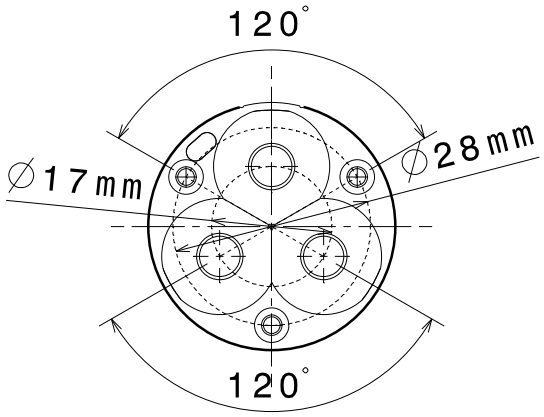

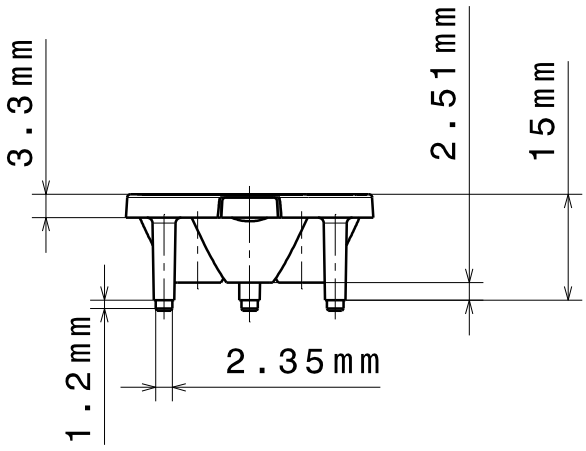

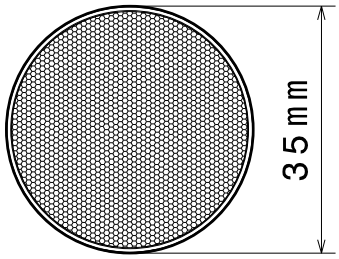

Material: PMMA

This drawing is our property.
It can't be reproduced
or communicated without
our written agreement.

Ledil Oy
Tehdaskatu 13
FIN-24100 SALO
Finland

DRAWN BY: RM	DATE: 30.10.2007	DRAWING TITLE: Cute-3-CSS			
CHECKED BY: HH	DATE: 30.10.2007	SIZE: A4	DRAWING NUMBER: 10428		REV: 0.1
DESIGNED BY: HH	DATE: 30.10.2007	SCALE: 1:1	WEIGHT(g):		SHEET: 1/1

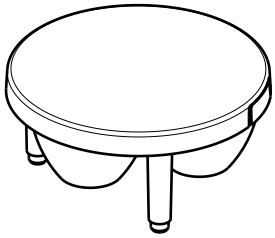

Isometric view
Scale: 1:1

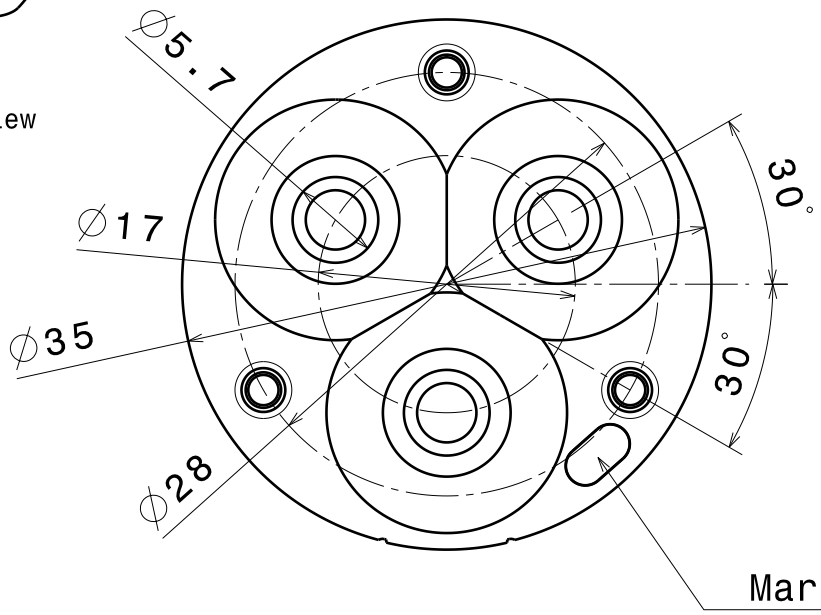

Bottom view

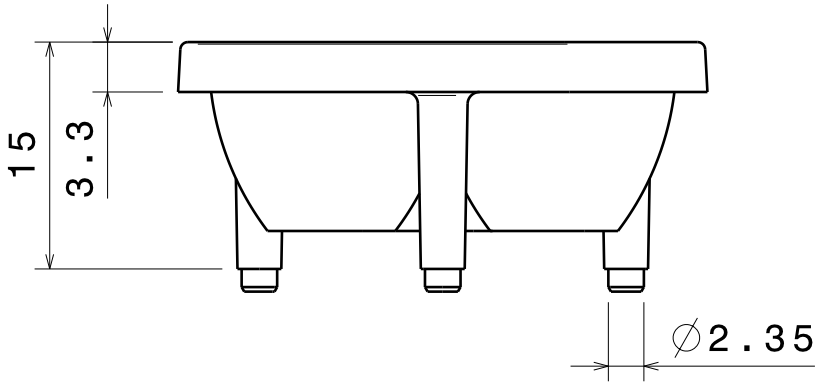

Front view

Material: PMMA

This drawing is our property.
It can't be reproduced
or communicated without
our written agreement.

Ledil Oy
Tehdaskatu 13
FIN-24100 SALO
Finland

DRAWN BY: pv	DATE: 21.01.2009	DRAWING TITLE: Datasheet Cute-3-W Lens			
CHECKED BY: tk	DATE: 10.12.2008	SIZE: A4	DRAWING NUMBER: 10429		REV: 0.1
DESIGNED BY: hh	DATE: 10.12.2008	SCALE: 2:1	WEIGHT(g):		SHEET: 1/1

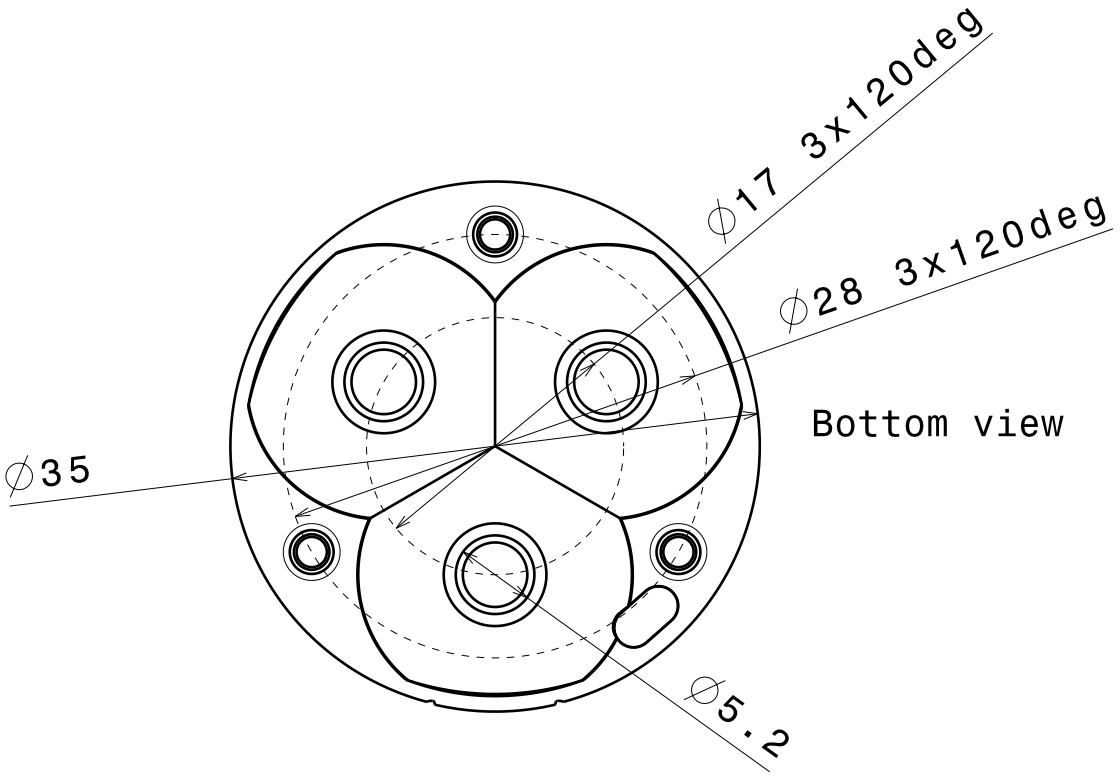

Bottom view

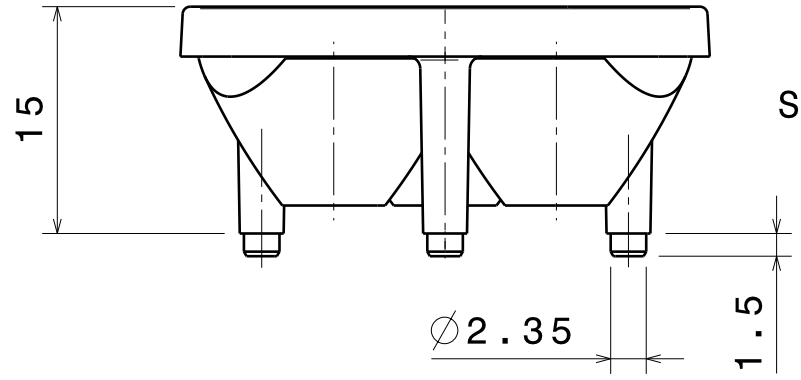

Side view

Material: PMMA

This drawing is our property.
It can't be reproduced
or communicated without
our written agreement.

Ledil Oy
Tehdaskatu 13
FIN-24100 SALO
Finland

DRAWN BY: pv	DATE: 08.09.2008	DRAWING TITLE: Datasheet Cute3-O-Plus-SS Lens			
CHECKED BY: TK	DATE: 29.08.2008	SIZE: A4	DRAWING NUMBER: 10710		REV: 0.1
DESIGNED BY: HH	DATE: 29.08.2008	SCALE: 2:1	WEIGHT(g):		SHEET: 1/1

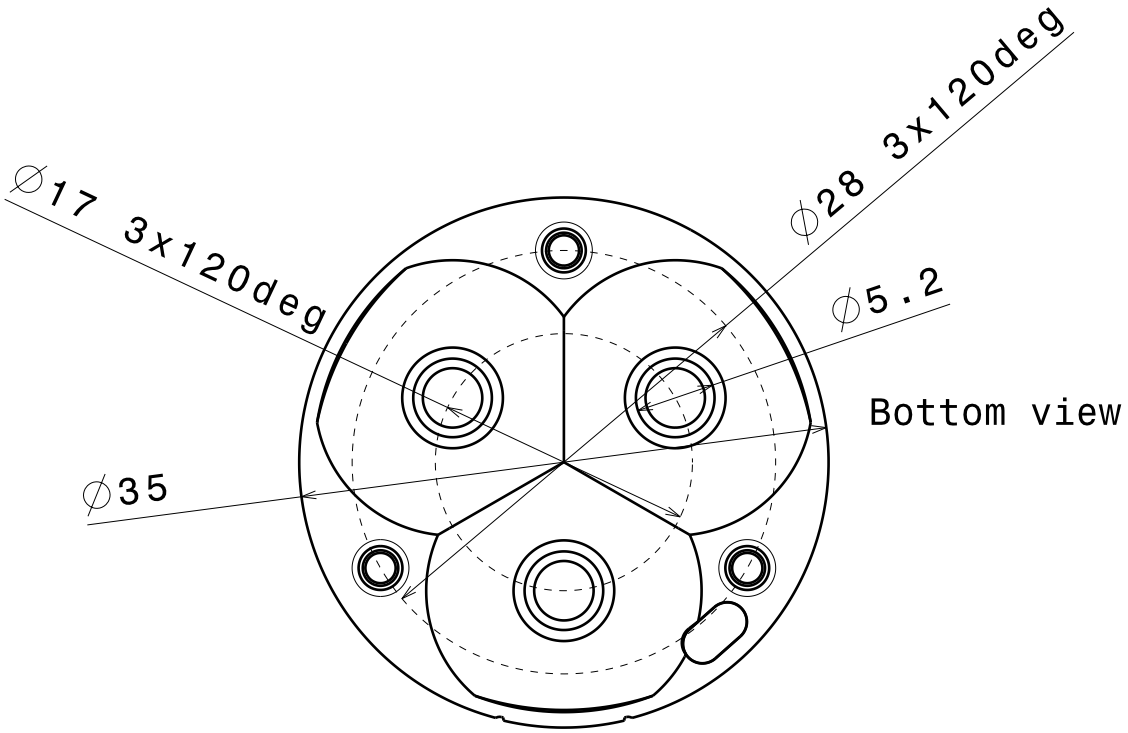

Bottom view

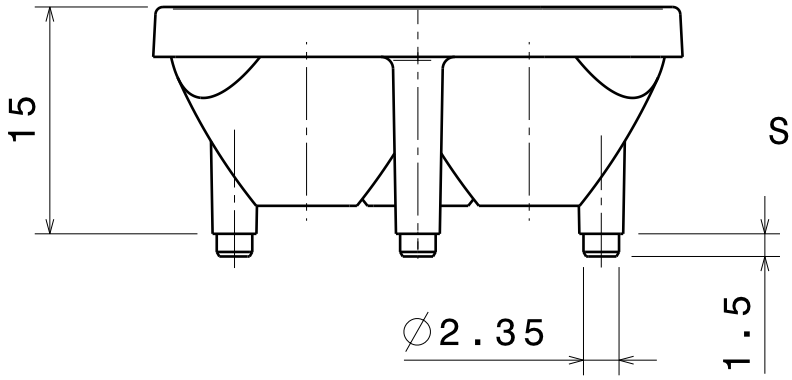

Side view

Material: PMMA

This drawing is our property.
It can't be reproduced
or communicated without
our written agreement.

Ledil Oy
Tehdaskatu 13
FIN-24100 SALO
Finland

DRAWN BY: pv	DATE: 08.09.2008	DRAWING TITLE: Datasheet Cute3-O-Plus-M Lens			
CHECKED BY: TK	DATE: 29.08.2008	SIZE: A4	DRAWING NUMBER: 10711		REV: 0.1
DESIGNED BY: HH	DATE: 29.08.2008	SCALE: 2:1	WEIGHT(g):		SHEET: 1/1

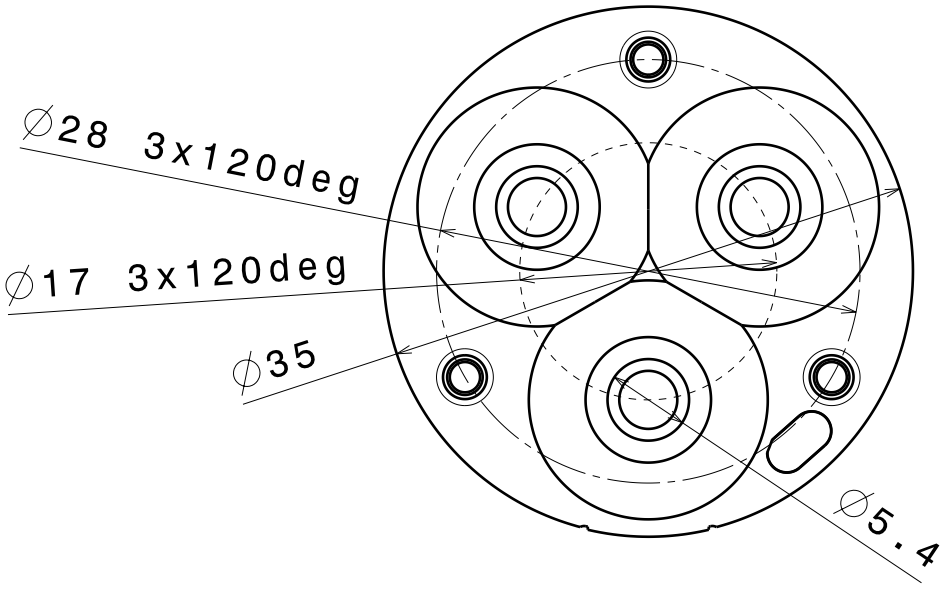

Bottom view

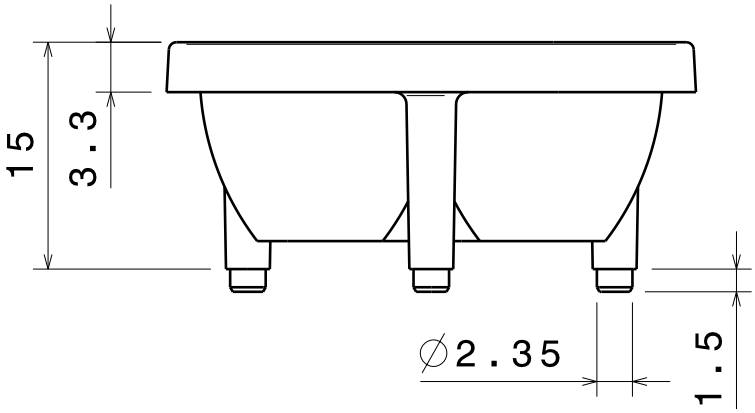

Front view

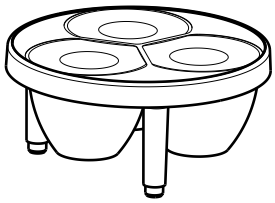

Isometric view
Scale: 1:1

Material: PMMA

This drawing is our property.
It can't be reproduced
or communicated without
our written agreement.

Ledil Oy
Tehdaskatu 13
FIN-24100 SALO
Finland

DRAWN BY: pv	DATE: 19.11.2008	DRAWING TITLE: Datasheet Cute3-O-Plus-W Lens			
CHECKED BY: TK	DATE: 13.11.2008	SIZE: A4	DRAWING NUMBER: 10712		REV: 0.1
DESIGNED BY: HH	DATE: 13.11.2008	SCALE: 2:1	WEIGHT(g):		SHEET: 1/1

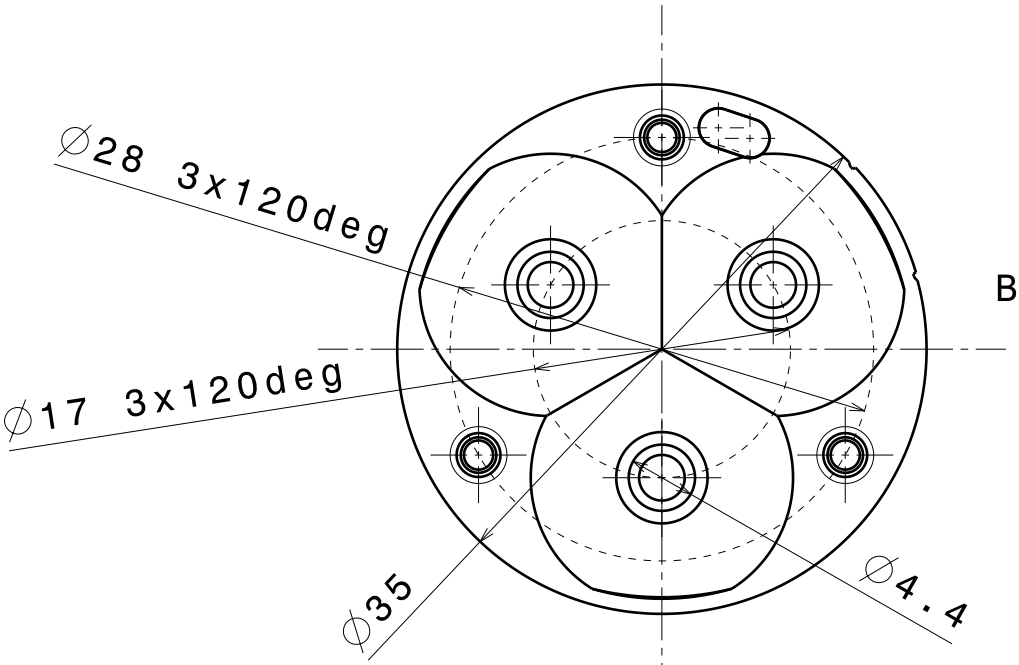

Bottom view

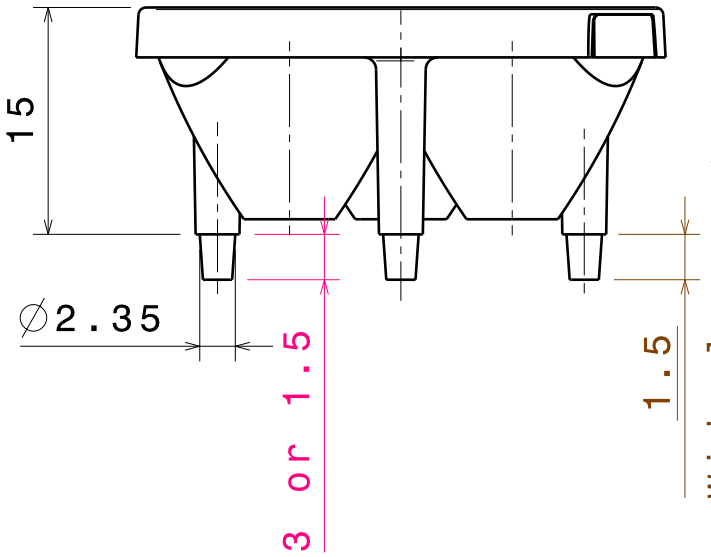

Side view

Material: PMMA

Part no.s;
Spot:
C10754_Cute-3-SS
C11333_Cute-3-SS, pin head length =1.5mm
Medium:
C10755_Cute-3-M
C11334_Cute-3-M, pin head length =1.5mm
Wide:
C10756_Cute-3-W

This drawing is our property.
It can't be reproduced
or communicated without
our written agreement.

Ledil Oy
Tehdaskatu 13
FIN-24100 SALO
Finland

DRAWN BY: pv	DATE: 08.02.2010	DRAWING TITLE: Datasheet Cute-3 Lens Series		
CHECKED BY: TK	DATE: 09.09.2008	SIZE: A4	DRAWING NUMBER	REV: 1
DESIGNED BY: HH	DATE: 09.09.2008	SCALE: 2:1	WEIGHT(g)	SHEET: 1/1