Universal MATE-N-LOK Connectors

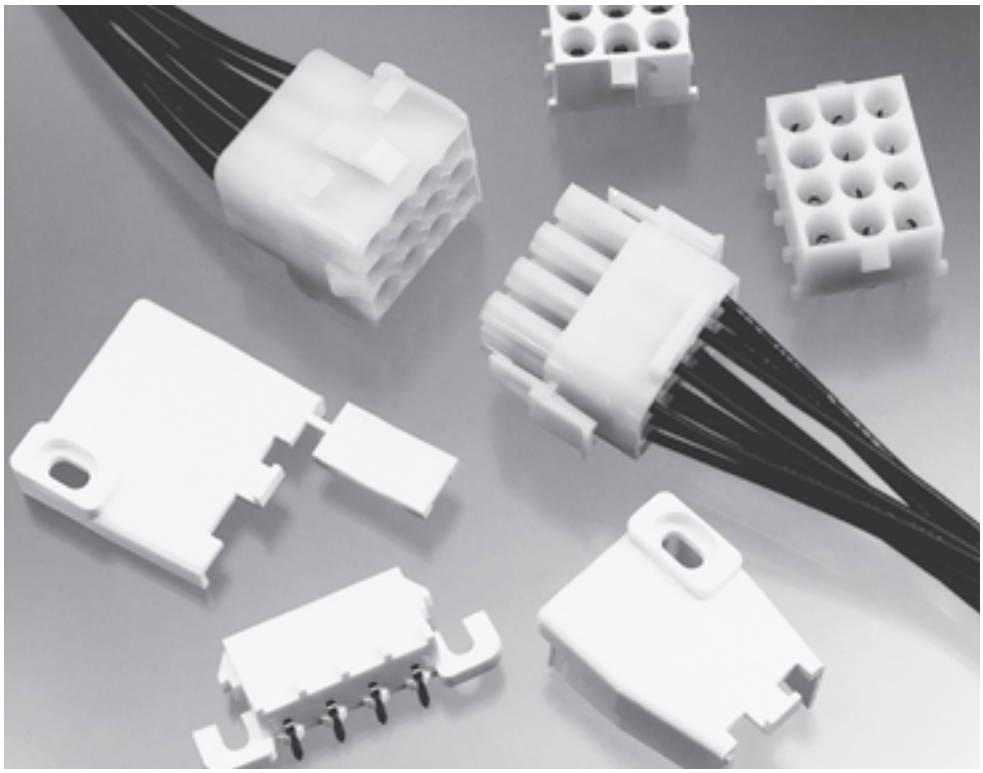

Product Facts

- Pins and sockets can be intermixed in the same housing
- Positive polarization
- Rear cavity identification
- Contacts completely enclosed in housings
- Positive locking housings
- Insulation capability to .200 [5.08] diameter
- Removable, crimp snap-in contacts
- Low contact mating force
- Contacts accept 30-10 AWG [.05-5.0 mm²] wire sizes
- Contacts available with pre-tin or gold plating
- Dual locking lances provide optimum contact stability
- Panel mount or free hanging
- Mate with Universal MATE-N-LOK II Housings
- Available in UL 94V-O flame retardant material. Meets the material requirements of table 25.1 of U.L. Standard 1410 (television receivers and video products)
- Not for interrupting current
- Harness to PC Board capability using pin or socket headers
- Pin and socket headers are available in both vertical and right-angle style
- Solderability — headers meet MIL-STD 202 Method 208
- Contacts are on .250 [6.35] centerline spacing
- Recognized under the Component Program of Underwriters Laboratories Inc., File No. E28476
- Certified by Canadian Standards Association, File No. LR 7189
- Passed test by VDE under their Registration Number 3980/Continuous Surveillance

Performance Characteristics

The Universal MATE-N-LOK Connector performance characteristics found on pages 163-164 are based on free hanging and panel mount connectors, loaded with contacts crimped on stranded wire.

Dielectric Withstanding Voltage—5.0 KVAC or 5.0 KVDC between adjacent circuits

Insulation Resistance—1000 megohms minimum initial between adjacent circuits

Voltage Rating—600 V AC or DC

Contact Insertion Force—5.0 lb. max. per contact

Contact Retention—15 lb. min. per contact

Durability—50 cycles, mating and unmating

Technical Documents

Product Specifications

108-1031 Universal MATE-N-LOK Connectors

108-1053 Universal MATE-N-LOK PC Board Headers

Application Specification

114-1010 Universal MATE-N-LOK Contacts

Instruction Sheet

408-7714 Plug, Cap, Headers, Pin, Socket and Accessories

Catalog 82181
Revised 5-06

www.tycoelectronics.com

Dimensions are in inches and millimeters unless otherwise specified. Values in brackets are metric equivalents.

Dimensions are shown for reference purposes only. Specifications subject to change.

USA: 1-800-522-6752
Canada: 1-905-470-4425
Mexico: 52-55-1106-0800
C. America: 57-1-254-4444

South America: 55-11-2103-6000
Hong Kong: 852-2735-1628
Japan: 81-44-844-8013
UK: 44-208-420-8341

Universal MATE-N-LOK Connectors (Continued)

Performance Characteristics (Continued)

Maximum Current—Maximum current rating of Universal MATE-N-LOK connectors is limited by the maximum operating temperature of the housings which is 125°C for 94V-2 housings and 120°C for 94V-0 housings including the temperature rise of the contacts which is a maximum of 30°C. There are several variables which have a direct effect on this maximum current-carrying capability for a given connector and must be considered for each application. These variables are:

Wire Size—Larger diameter wire will carry more current since it has less internal resistance to current flow and thus generates less heat. Longer wire lengths also enhance current carrying capabilities since the wire conducts heat away from the connector.

Connector Size—In general, the more circuits in a connector, the less current can be carried.

Ambient Temperature—The higher the ambient temperature, the less current can be carried in any given connector.

Printed Wiring Board Conductor Size—The finished trace conductor width and thickness should be maximized to allow for the greatest current carrying capacity and heat dissipation.

Universal MATE-N-LOK connectors also will withstand the following tests:

Vibration—10-55-10 cycles per minute at .06 inch total excursion

Physical Shock—18 drops, 50 G sawtooth at 10 milliseconds

Housing Panel Retention—75 lb. min.

Housing Lock Strength—30 lb. min.

Thermal Shock— -55°C to +85°C

Temperature-Humidity Cycling—25°C to 65°C at 95 RH

Corrosion—48 hr. at 5% salt concentration

Related Product Data

Product Specifications

108-1031 Universal MATE-N-LOK Connectors

108-1053 Universal MATE-N-LOK Headers

Current Rating Verification for 30°C Maximum Temperature Rise 100% Energized

Wire-to-Wire Calculated Current Table

Number of Circuits	Wire Gauge									
	10	12	14	16	18	20	22	24	26	30
2	19.00	18.00	17.00	14.50	13.00	10.00	8.00	6.50	5.50	3.50
3	17.50	16.50	15.50	13.00	12.00	9.00	7.50	6.00	5.00	3.00
4	16.50	15.50	15.00	12.50	11.00	8.50	7.00	5.50	4.50	3.00
5	16.00	15.00	14.00	12.00	10.50	8.00	6.50	5.50	4.50	3.00
6 In-Line	15.50	14.50	13.50	11.50	10.00	8.00	6.50	5.00	4.00	2.50
6 Matrix	15.00	14.00	13.00	11.00	9.50	7.50	6.00	5.00	4.00	2.50
8	14.50	14.00	13.00	10.50	9.50	7.50	6.00	5.00	4.00	2.50
9	13.50	12.50	11.50	9.50	8.50	6.50	5.50	4.50	3.50	2.00
10	14.00	13.00	12.50	10.00	9.00	7.00	5.50	4.50	3.50	2.50
12	12.50	12.00	11.00	9.00	8.00	6.00	5.00	4.00	3.00	2.00
15	12.00	11.50	10.00	8.50	7.50	6.00	4.50	4.00	3.00	2.00

Values are based on initial Temperature Rise versus Current Testing and are intended to be a guide in the selection of a connector family. All applications should be tested by the end user. The values listed are per circuit for fully loaded housings being 100% energized. **Note:** All combinations were not tested, and this chart contains interpolated and extrapolated values.

Minimum Wire Lengths for T-Rise vs. Current Testing

AWG	Min. Length (in.)	AWG	Min. Length (in.)
30	2.6	18	9.4
28	3.2	16	11.3
26	4.1	14	13.7
24	5.1	12	16.4
20	7.8	10	19.3

Note: If wire lengths used are less than those listed above, the current carrying ability of the system will be reduced due to less heat being conducted away from the connector. The customer should fully test all applications.

Wire-to-Board

Due to the vast differences in trace geometry and printed circuit board configurations, we are unable to provide a separate current carrying chart for our printed circuit board header products. However, the above Wire-to-Wire charts may be used as a guideline for headers if the trace width and thickness is equal to the listed wire gauge. For vertical headers, only 95% of the Wire-to-Wire value should be used. For right-angle headers, only 75% of the Wire-to-Wire value should be used. The chart values are only a tool for connector selection and will require the customer to fully test their application.

Termination Resistance/Contact Crimp Tensile Force

Wire Size		Termination Resistance		Contact Crimp Tensile Force	
AWG	mm²	Test Current (Amps)	Resistance Milliohms (Max. Init.)	Force (Min.) lbs.	Force (Min.) N
30	.05	—	—	2	9
28	.08	—	—	3	13
26	.12	—	—	6	27
24	.2	1.5	3.50	8	36
22	.3	3	3.50	14	62
20	.5	4.5	3.00	14	62
18	.8	6	3.00	30	133
16	1.2	8	2.75	45	200
14	2.0	10	2.75	50	222
12	3.0	—	—	60	267
10	5.0	—	—	70	311

Note: This is the total resistance between wire crimps of a mated pin and socket.

Universal MATE-N-LOK Connectors (Continued)

Universal MATE-N-LOK Connector Mating Combinations

Connector Part Number					Mating Connector Part Number								
						PC Board Headers							
						Vertical Pin[2]			Vertical Socket[2]			Right-Angle[2]	
Number of Circuits	Flammability Rating	Style	Plug Part Number[2]	Cap Part Number[2]	Plating	Standard Tail	Standard Tail Polarized	Long Tail	Standard Tail	Standard Tail Polarized	Long Tail	Pin	Socket
1	UL94V-2	—	1-350867-0 1-641084-0[3]	770421-1 1-641083-0[3]	—	—	—	—	—	—	—	—	—
	UL94V-0	—	350865-1	350866-1	—	—	—	—	—	—	—	—	—
2	UL94V-2	In-Line	1-480698-0 1-770113-0[3]	1-480699-0 1-770114-0[3]	Pre-tin	350428-1	641963-1	350582-1	350759-4	643411-1	350986-4	—	—
					Duplex[1]	350428-4	641963-3	350582-4	350759-5	—	—	—	—
	UL94V-0	In-Line	350777-1	350778-1	Pre-tin	350786-1	641964-1 1-641964-1[5]	350787-1	350824-1	643412-1	350831-1	1-350942-0	643226-1
					Duplex[1]	350786-3	641964-3	350787-3	350824-4	643412-3	—	3-350942-0	—
3	UL94V-2	In-Line	1-480700-0 1-641771-0[3]	1-480701-0 1-641767-0[3]	Pre-tin	350429-1	641965-1	350583-1	350760-4	643413-1	350987-4	—	—
					Duplex[1]	350429-4	—	350583-4	350760-5	—	—	—	—
	UL94V-0	In-Line	350766-1	350767-1	Pre-tin	350789-1	641966-1 1-641966-1[4]	350790-1	350825-1	643414-1	350832-1	1-350943-0	643228-1
					Duplex[1]	350789-3	—	350790-3	350825-4	643414-3	350832-4	3-350943-0	3-643228-0
4	UL94V-2	In-Line	1-480702-0 770208-1[3]	1-480703-0 770209-1[3]	Pre-tin	350430-1	641967-1	350584-1	350761-4	643415-1	350988-4	1-350948-0	—
					Duplex[1]	350430-4	—	350584-4	350761-5	—	350988-5	—	—
	UL94V-0	In-Line	350779-1	350780-1	Pre-tin	350792-1	641968-1	350793-1	350826-1	643416-1	350833-1	1-350944-0	643230-1
					Duplex[1]	350792-3	—	350793-3	350826-4	—	350833-4	3-350944-0	3-643230-0
5	UL94V-2	In-Line	1-480763-0	1-480764-0	Pre-tin	640466-1	643405-1	—	640467-1	—	—	1-350949-0	—
					Duplex[1]	640466-3	—	—	640467-3	—	—	—	—
	UL94V-0	In-Line	350809-1	350810-1	Pre-tin	640900-1	643406-1	—	640901-1	—	—	1-350945-0	643232-1
					Duplex[1]	640900-3	—	—	640901-3	—	—	3-350945-0	3-643232-0
6	UL94V-2	In-Line	640585-1	926307-1	Pre-tin	641832-1	643407-1	—	—	—	—	640587-1	—
					Duplex[1]	641832-3	—	—	—	—	—	—	—
	UL94V-0	In-Line	640581-1	926307-3	Pre-tin	641831-1	643408-1	—	770262-1	—	—	640583-1	643234-1
					Duplex[1]	641831-3	—	—	770262-3	—	—	640583-3	3-643234-0
	UL94V-2	Matrix	1-480704-0 1-641770-0[3] 794096-1[5]	1-480705-0 1-641766-0[3]	Pre-tin	350431-1	641969-1	350585-1	350762-4	643423-1	350989-4	—	—
					Duplex[1]	350431-4	—	350585-4	350762-5	—	350989-5	—	—
	UL94V-0	Matrix	350715-1	350781-1	Pre-tin	350711-1	641970-1	350732-1	350827-1	643424-1	350834-1	—	—
					Duplex[1]	350711-4	641970-3	350732-4	350827-4	643424-3	350834-4	—	—
8	UL94V-2	In-Line	640586-1	926308-1	Pre-tin	641825-1	—	770143-1	—	—	—	—	—
					Duplex[1]	—	—	—	—	—	—	—	—
	UL94V-0	In-Line	640582-1	926308-3	Pre-tin	641828-1	643410-1	—	—	—	—	640584-1	643326-1
					Duplex[1]	—	643410-3	—	—	—	—	640584-3	3-643326-0
9	UL94V-2	Matrix	1-480706-0 1-641769-0[3]	1-480707-0 1-641765-0[3]	Pre-tin	350432-1	641971-1	350586-1	350763-4	643425-1	350990-4	—	—
					Duplex[1]	350432-4	641971-3	350586-4	350763-5	—	350990-5	—	—
	UL94V-0	Matrix	350720-1	350782-1	Pre-tin	350712-1	641972-1 1-641972-1[4]	350742-1	350828-1	643426-1	350835-1	—	—
					Duplex[1]	350712-4	641972-3	350742-4	350828-4	643426-3	350835-4	—	—
10	UL94V-2	In-Line	926302-1	926309-1	Pre-tin	—	—	—	—	—	—	—	—
					Duplex[1]	—	—	—	—	—	—	—	—
	UL94V-0	In-Line	926302-3	926309-3	Pre-tin	—	—	—	—	—	—	—	—
					Duplex[1]	—	—	—	—	—	—	—	—
12	UL94V-2	Matrix	1-480708-0 1-641768-0[3]	1-480709-0 641764-1[3]	Pre-tin	350433-1	641973-1	350587-1	350764-4	—	350991-4	—	—
					Duplex[1]	350433-4	—	350587-4	350764-5	—	350991-5	—	—
	UL94V-0	Matrix	350735-1	350783-1	Pre-tin	350713-1	641974-1 1-641974-1[4]	350737-1	350829-1	643428-1	350836-1	—	—
					Duplex[1]	350713-4	641974-3	350737-4	350829-4	—	350836-4	—	—
15	UL94V-2	Matrix	1-480710-0	1-480711-0	Pre-tin	350434-1	641975-1	350588-1	350765-4	643429-1	350992-4	—	—
					Duplex[1]	350434-4	—	350588-4	350765-5	—	—	—	—
	UL94V-0	Matrix	350736-1	350784-1	Pre-tin	350714-1	641976-1	350738-1	350830-1	643430-1	350837-1	—	—
					Duplex[1]	350714-4	641976-4	350738-4	350830-4	—	350837-4	—	—

[1]Duplex Finish — Plated with .000030 [.000762] min. gold in mating area, matte tin on solder tail end over .000050 [.00127] min. nickel underplate on entire contact.
[2]Universal MATE-N-LOK Plug and Cap housings accept pin or socket contacts. Use the appropriate contacts in the Plug housing as required by the mating component.
[3]Housing material has 125°C temperature rating. Lime green color. 12 Circuit cap black color.
[4]Black in color.
[5]Tool Removable
Note: All part numbers are RoHS Compliant.

Catalog 82181
Revised 5-06

www.tycoelectronics.com

Dimensions are in inches and millimeters unless otherwise specified. Values in brackets are metric equivalents.

Dimensions are shown for reference purposes only. Specifications subject to change.

USA: 1-800-522-6752
Canada: 1-905-470-4425
Mexico: 52-55-1106-0800
C. America: 57-1-254-4444

South America: 55-11-2103-6000
Hong Kong: 852-2735-1628
Japan: 81-44-844-8013
UK: 44-208-420-8341

Universal MATE-N-LOK Connectors (Continued)

Contacts

Solid pin diameter .084 [2.13]

Stock thickness .012 [.305] unless otherwise noted.

These contacts can be used in either Universal MATE-N-LOK Plug or Cap housings **only**.

Related Product Data

Product Specification

108-1031 Universal MATE-N-LOK Connectors

Application Specification

114-1010 Universal MATE-N-LOK Contacts

Performance Characteristics— pages 163-164
Technical Documents— pages 163 and 199-200
Application Tooling— pages 201-204
Housings—page 168

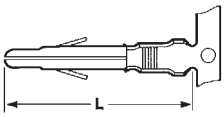

Solid Pin

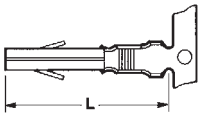

Socket

Wire Size Range AWG [mm²]	Ins. Dia. Range	L Dim. Pin	L Dim. Socket	Material & Finish	Contact Part Numbers: Pin, Strip Form	Pin, Loose Piece	Socket, Strip Form	Socket, Loose Piece	HDM Applicator Part No.	Hand Tool Part No.
30-26 [.05-.12]	**.032-.057** .813-1.45	**.790** 20.06	**.760** 19.30	Brass, Pre-tin	350924-1	770672-1	350925-1	770673-1	466616-2[6] 466616-3[6]	58439-1
				Phos. Brz., Gold[2]	350924-6	770672-6	350925-6	—		
24-18 [.2-.8]	**.040-.100** 1.02-2.54	**.790** 20.06	**.760** 19.30	Brass, Pre-tin	350561-1	350690-1	350851-1 350570-1[1]	350689-1[1]	466320-1[6] 466320-2[6] 466320-4[6]	91510-1
				Brass, Gold[2]	350561-2	350690-2	350851-2 350570-2[1]	640347-2 350689-2[1]		
				Brass, Select Gold[3]	350561-7	350690-7	350851-7 350570-7[1]	350689-7[1]		
				Phos. Brz., Pre-tin	350561-3	350690-3	350570-3[1]	350689-3[1]		
				Phos. Brz., Select Gold[3]	—	—	350570-6[1]	—		
20-14 [.5-2.0]	**.060-.130** 1.52-3.30	**.790** 20.06	**.760** 19.30	Brass, Pre-tin	350218-1	350547-1	350536-1	350550-1	687763-1[6] 687763-2[6] 687763-6[6]	91500-1
				Brass, Gold[2]	350218-2	350547-2	350536-2	350550-2		
				Brass, Select Gold[3]	350218-7	350547-7	350536-7	350550-7		
				Phos. Brz., Pre-tin	350218-3	350547-3	350536-3	350550-3		
				Phos. Brz., Select Gold[3]	350218-6	350547-6	350536-6	350550-6		
20-14 [.5-2.0] or 2@18 [.8]	**.130-.200** 3.30-5.08	**.810** 20.57	**.780** 19.81	Brass, Pre-tin	350538-1	350552-1	350537-1	350551-1	687926-1[6] 687926-2[6] 687926-6[6]	91508-1[7] 91506-1[7]
				Brass, Gold[2]	350538-2	350552-2	350537-2	350551-2		
				Brass, Select Gold[3]	350538-7	350552-7	350537-7	350551-7		
				Phos. Brz., Pre-tin	350538-3	350552-3	350537-3	350551-3		
				Phos. Brz., Select Gold[3]	350538-6	350552-6	350537-6	350551-6		
18-14[4] [.8-2.0]	**.130-.200** 3.30-5.08	**.810** 20.57	**.780** 19.81	Brass, Pre-tin	350873-1	—	350874-1	—	466588-1[6] 466588-2[6] 466588-3[6]	91508-1[7] 91506-1[7]
				Phos. Brz., Pre-tin	350873-3	350918-3	350874-3	350919-3		
12-10 [3.0-5.0]	**.200 max.**[5] 5.08	**.810** 20.57	**.780** 19.81	Phos. Brz., Pre-tin	350922-3	640309-3	350923-3	640310-3	466597-1[6] 466597-2[6] 466597-3[6]	69710-1[7]
				Phos. Brz., Select Gold[3]	350922-6	640309-6	350923-6	640310-6		

[1]Socket Contact — .010 [.254] stock thickness
[2]Gold Finish — Plated with .000030 [.000762] min. gold in mating area and inside wire barrel over .000050 [.00127] min. nickel underplate on entire contact.
[3]Select Gold Finish — Plated with .000030 [.000762] min. gold in mating area over .000050 [.00127] min. nickel underplate on entire contact.
[4]Recommended for predominant use of 14 AWG wire.
[5]There is no insulation barrel on this contact. Insulation maximum diameter is limited by the housing.
[6]HDM Applicator part number ending in -1 is used on AMPOMATOR CLS Machine with T or G Terminators, -2 is used on AMP-O-LECTRIC Model K Machine, -3, -4 & -6 are used on AMP-O-LECTRIC Model G Machine. See pages 201-204 for further information.
[7]Hand Tool No. **91508-1** is for wire size 20-18 AWG. Hand Tool No. **91506-1** is for wire size 16-14 AWG. Hand Tool No. **69710-1** use die set No. **58380-1** for 12 AWG and No. **58380-2** for 10 AWG.

Note: Phosphor bronze material contacts should be used in high temperature/humidity cycling applications.
Note: All part numbers are RoHS Compliant.

Contact Retention Test Tool
Part No. 1586700-1
IS 408-10003

Contact Extraction Tool
Part No. 318851-1
IS 408-4371

Contact Insertion Tool
(For inserting contacts applied to small diameter wire)
Part No. 91002-1
IS 408-7347

Dimensions are in inches and millimeters unless otherwise specified. Values in brackets are metric equivalents.

Dimensions are shown for reference purposes only. Specifications subject to change.

USA: 1-800-522-6752
Canada: 1-905-470-4425
Mexico: 52-55-1106-0800
C. America: 57-1-254-4444

South America: 55-11-2103-6000
Hong Kong: 852-2735-1628
Japan: 81-44-844-8013
UK: 44-208-420-8341

Universal MATE-N-LOK Connectors (Continued)

Contacts

Split pin diameter .086 [2.18]

Stock thickness .012 [.305]

These contacts can be used in either Universal MATE-N-LOK Plug or Cap housings **only**.

Related Product Data

Product Specification

108-1031 Universal MATE-N-LOK Connectors

Application Specification

114-1010 Universal MATE-N-LOK Contacts

Performance Characteristics— pages 163-164
Technical Documents— pages 163 and 199-200
Application Tooling— pages 201-204
Housings—page 168

Split Pins

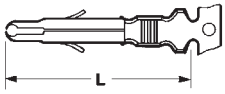

Wire Size Range AWG [mm²]	Ins. Dia. Range	L Dim.	Material & Finish	Contact Part Number		HDM Applicator Part No.	Hand Tool Part No.
				Strip Form	Loose Piece		
24-18 [.2-.8]	**.040-.100** 1.02-2.54	**.790** 20.06	Brass, Pre-tin	350699-1	350706-1	466320-1[3] 466320-2[3] 466320-4[3]	91510-1
			Brass, Gold[1]	350699-2	350706-2		
			Brass, Select Gold[2]	350699-7	350706-7		
20-14 [.5-2.0]	**.060-.130** 1.52-3.30	**.790** 20.06	Brass, Pre-tin	350687-1	350705-1	687763-1[3] 687763-2[3] 687763-6[3]	91500-1
			Brass, Gold[1]	350687-2	350705-2		
			Brass, Select Gold[2]	350687-7	350705-7		
20-14 [.5-2.0] or 2@18 [.8]	**.130-.200** 3.30-5.08	**.810** 20.57	Brass, Pre-tin	350700-1	350707-1	687926-1[3] 687926-2[3] 687926-6[3]	91508-1[4] 91506-1[4]
			Brass, Gold[1]	350700-2	350707-2		
			Brass, Select Gold[2]	350700-7	350707-7		

[1]Gold Finish — Plated with .000030 [.000762] min. gold in mating area and inside wire barrel over .000050 [.00127] min. nickel underplate on entire contact.
[2]Select Gold Finish — Plated with .000030 [.000762] min. gold in mating area over .000050 [.00127] min. nickel underplate on entire contact.
[3]HDM Applicator part number ending in -1, is used on AMPOMATOR CLS Machine with T or G Terminators, -2 is used on AMP-O-LECTRIC Model K Machine, -4 & -6 are used on AMP-O-LECTRIC Model G Machine. See pages 201-204 for further information.
[4]Hand Tool No. **91508-1** for wire size 20-18 AWG. Hand Tool No. **91506-1** for wire size 16-14 AWG.

Notes:
1. Split pins recommended for use in housings having 6, 9, 12 and 15 circuits to reduce mating force.
2. Phosphor bronze material contacts are available for use in high temperature/humidity cycling applications, consult Tyco Electronics.

Grounding Pins

(.100 [2.54] longer than standard pin)

(Mate first, break last, not for interrupting current)

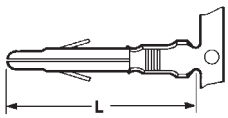

Wire Size Range AWG [mm²]	Ins. Dia. Range	L Dim.	Material & Finish	Contact Part Number		HDM Applicator Part No.	Hand Tool Part No.
				Strip Form	Loose Piece		
24-18 [.2-.8]	**.060-.130** 1.52-3.30	**.890** 22.60	Brass, Pre-tin	770210-1	—	567216-2[2] 567216-3[2]	—
20-14 [.5-2.0]	**.060-.130** 1.52-3.30	**.890** 22.60	Brass, Pre-tin	350654-1	350669-1	687763-1[2] 687763-2[2] 687763-6[2]	91500-1
12-10 [3.0-5.0]	**.200 max.**[1] 5.08	**.910** 23.11	Phos. Brz., Pre-tin	770234-3	—	466597-1[2] 466597-2[2] 466597-3[2]	—

[1]There is no insulation barrel on this contact. Insulation maximum diameter is limited by the housing.
[2]HDM Applicator part number ending in -1 is used on AMPOMATOR CLS Machine with T or G Terminators, -2 is used on AMP-O-LECTRIC Model K Machine, -3 & -6 are used on AMP-O-LECTRIC Model G Machine. See pages 201-204 for further information.

Programmable Connector Contact

(Socket with 110 Series Special FASTON Tab)

Material and Finish

Brass, pre-tin

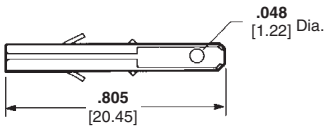

Part Number
350877-1

Note: This contact will accept a 110 Series FASTON Receptacle — Part No. **350871-1** (strip form) allowing simple field wiring or wiring changes.

Note: All part numbers are RoHS Compliant.

Dimensions are in inches and millimeters unless otherwise specified. Values in brackets are metric equivalents.

Dimensions are shown for reference purposes only. Specifications subject to change.

USA: 1-800-522-6752
Canada: 1-905-470-4425
Mexico: 52-55-1106-0800
C. America: 57-1-254-4444

South America: 55-11-2103-6000
Hong Kong: 852-2735-1628
Japan: 81-44-844-8013
UK: 44-208-420-8341

Universal MATE-N-LOK Connectors (Continued)

Housings

Free Hanging or Panel Mount

.250 [6.35] Centerline spacing

2, 3, 4, 5, 6, 8 and 10 Circuit, In-Line

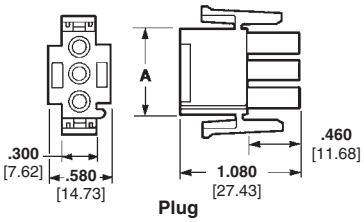

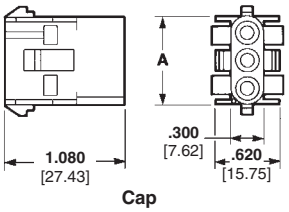

1 Circuit, Free Hanging

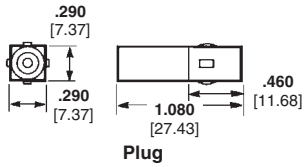

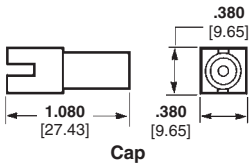

6 Circuit, Matrix

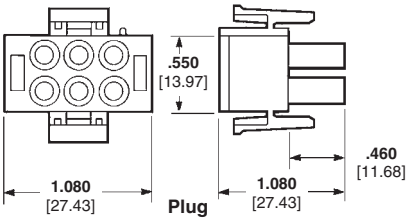

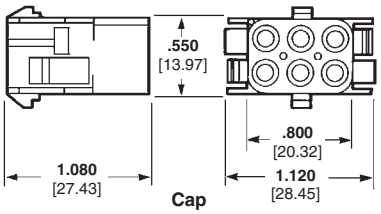

9, 12 and 15 Circuit, Matrix

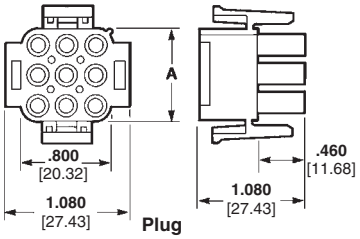

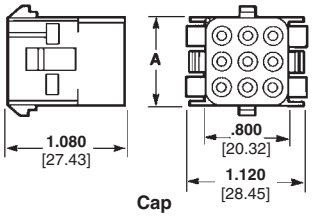

Related Product Data

Product Specification

108-1031 Universal MATE-N-LOK Connectors

Performance Characteristics—pages 163-164
Contacts—pages 166-167
Panel Cutout Recommendations—page 169
Keying Plug—page 169
Strain Reliefs—pages 169-170
Technical Documents—pages 163 and 199-200
Mating Headers—pages 176-177 and 179
Other Mating Connectors
Universal MATE-N-LOK II Housings—pages 187-188

Number of Circuits	A Dim.	Housing Part Numbers			
		UL94V-2 Nylon, Natural Color[2]		UL94V-0 Nylon[3]	
		Plug	Cap	Plug	Cap
1	—	1-350867-0	770421-1	350865-1	350866-1
2	**.550** 13.97	1-480698-0[1]	1-480699-0[1]	350777-1[1]	350778-1[1]
3	**.800** 20.32	1-480700-0[1]	1-480701-0[1]	350766-1[1]	350767-1[1]
4	**1.050** 26.67	1-480702-0[1]	1-480703-0[1]	350779-1[1]	350780-1[1]
5	**1.300** 33.02	1-480763-0[1]	1-480764-0[1]	350809-1[1]	350810-1[1]
6	**1.550** 39.37	640585-1[1]	926307-1[1]	640581-1[1]	926307-3[1]
	—	1-480704-0 / 794096-1[4]	1-480705-0	350715-1	350781-1
8	**2.050** 52.07	640586-1[1]	926308-1[1]	640582-1[1]	926308-3[1]
9	**.800** 20.32	1-480706-0	1-480707-0	350720-1	350782-1
10	**2.550** 64.77	926302-1[1]	926309-1[1]	926302-3[1]	926309-3[1]
12	**1.050** 26.67	1-480708-0	1-480709-0	350735-1	350783-1
15	**1.300** 33.02	1-480710-0	1-480711-0	350736-1	350784-1

[1]In-Line style.
[2]Housing material has 125°C temperature rating.
[3]Housing material has 120°C temperature rating.
[4]Tool Removable.

Note: All part numbers are RoHS Compliant.

Dimensions are in inches and millimeters unless otherwise specified. Values in brackets are metric equivalents.

Dimensions are shown for reference purposes only. Specifications subject to change.

USA: 1-800-522-6752
Canada: 1-905-470-4425
Mexico: 52-55-1106-0800
C. America: 57-1-254-4444

South America: 55-11-2103-6000
Hong Kong: 852-2735-1628
Japan: 81-44-844-8013
UK: 44-208-420-8341

Universal MATE-N-LOK Connectors (Continued)

Recommended Cap Housing Panel Cutouts

View is from cap entry side

Refer to Application Specification 114-1010

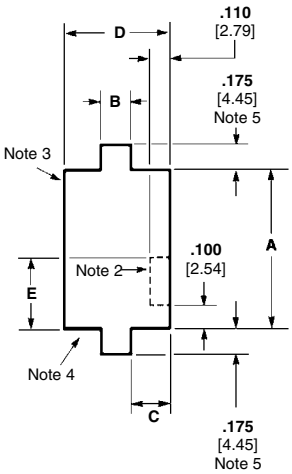

Style	Number of Circuits	Dimensions A	B	C	D	E
In-Line	2	**.565** 14.35	**.340** 8.64	**.095** 2.41	**.530** 13.46	**.250** 6.35
	3	**.815** 20.70	**.340** 8.64	**.095** 2.41	**.530** 13.46	**.250** 6.35
	4	**1.065** 27.05	**.340** 8.64	**.095** 2.41	**.530** 13.46	**.250** 6.35
	5	**1.315** 33.40	**.340** 8.64	**.095** 2.41	**.530** 13.46	**.250** 6.35
	6	**1.567** 39.80	**.154** 3.91	**.189** 4.80	**.531** 13.49	**.394** 10.0
	8	**2.067** 52.50	**.154** 3.91	**.189** 4.80	**.531** 13.49	**.394** 10.0
	10	**2.567** 65.20	**.154** 3.91	**.189** 4.80	**.530** 13.46	**.394** 10.0
Matrix	6	**.565** 14.35	**.480** 12.19	**.275** 6.99	**1.030** 26.16	**.250** 6.35
	9	**.815** 20.70	**.480** 12.19	**.275** 6.99	**1.030** 26.16	**.250** 6.35
	12	**1.065** 27.05	**.480** 12.19	**.275** 6.99	**1.030** 26.16	**.350** 8.89
	15	**1.315** 33.40	**.480** 12.19	**.275** 6.99	**1.030** 26.16	**.350** 8.89

Notes:
1. Recommended panel thickness — .030-.090 [.762-2.286]. Panel must be punched so that housing enters panel in same direction as the punch.
2. Optional — Do not remove this material when keying cap housing to panel.
3. Circuit #1 location when using panel keying with 6, 9, 12 and 15 circuit Matrix housings.
4. Circuit #1 location when using panel keying with 2, 3, 4, 5, 6, 8 and 10 circuit In-Line housings.
5. .175 [4.45] dimension is .125 [3.18] for 6, 8 and 10 circuit In-Line housings.

Keying Plugs

IS 408-3320

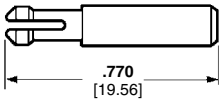

Part Numbers
UL94V-2 Nylon material, natural color — **1-640415-1**
UL94V-0 Nylon material — **1-640415-0**
Note: Keying plug snaps into plug or cap housing

Plug Housing Strain Reliefs

IS 408-3320

2, 3, 4, 5, 6 and 8 Circuit, In-Line

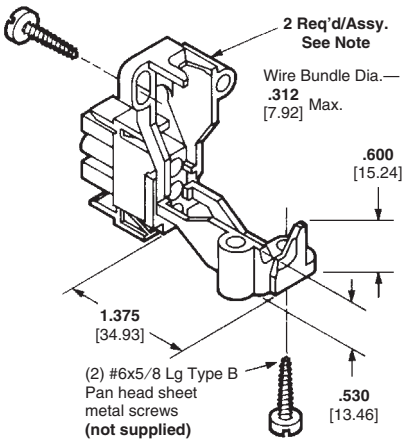

Part Numbers
UL94V-2 Nylon material, natural color — **1-350589-0**
UL94V-0 Nylon material — **350811-1**

6, 9, 12 and 15 Circuit, Matrix

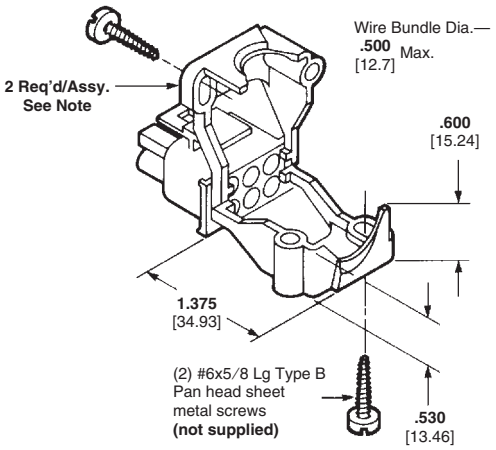

Part Numbers
UL94V-2 Nylon material, natural color — **1-350590-0**
UL94V-0 Nylon material — **350812-1**

Note: Strain relief part number represents one half of a strain relief. Two strain reliefs required per housing.

Note: All part numbers are RoHS Compliant.

Related Product Data

Plug Housings— page 168
Technical Documents— pages 163 and 199-200

Dimensions are in inches and millimeters unless otherwise specified. Values in brackets are metric equivalents.

Dimensions are shown for reference purposes only. Specifications subject to change.

USA: 1-800-522-6752
Canada: 1-905-470-4425
Mexico: 52-55-1106-0800
C. America: 57-1-254-4444

South America: 55-11-2103-6000
Hong Kong: 852-2735-1628
Japan: 81-44-844-8013
UK: 44-208-420-8341

Universal MATE-N-LOK Connectors (Continued)

Plug or Cap Housing Strain Reliefs

IS 408-3320

Related Product Data

Housings— page 168
Technical Documents— pages 163 and 199-200

2, 3, 4, 5, 6, 8, 9, 12 and 15 Circuit (Enclosed)

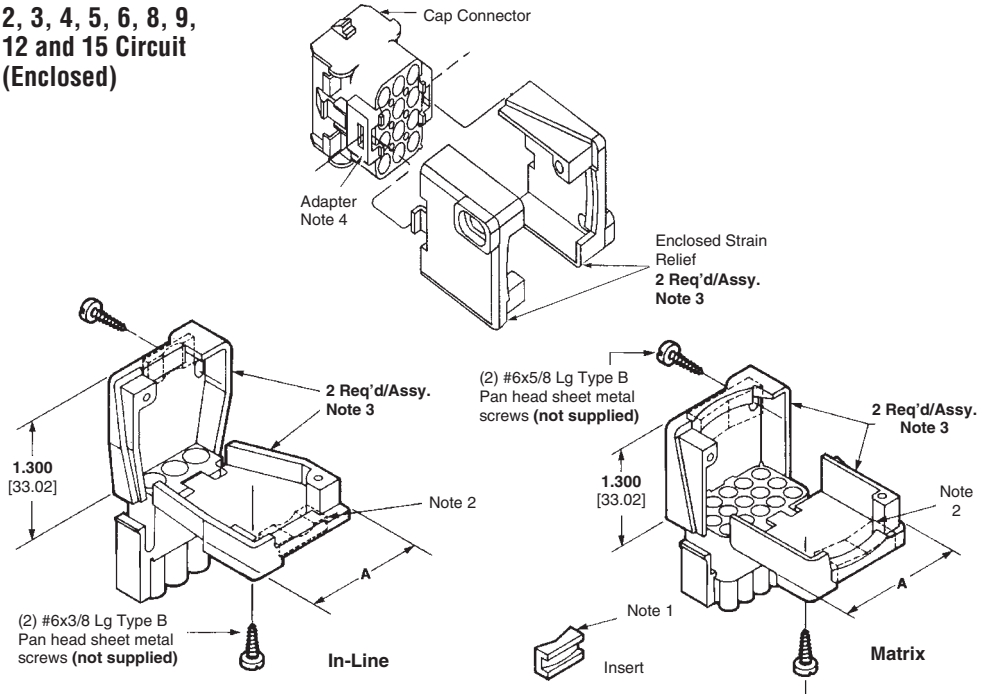

Cap Housing Adapters

These adapters are designed to anchor the cap housing strain reliefs to the housings and prevent the strain relief halves from "drawing in" when the screws are being torqued down to clamp the cable.

IS 408-3320

For All Positions Except 2, 6 and 8 Circuit Cap Housings

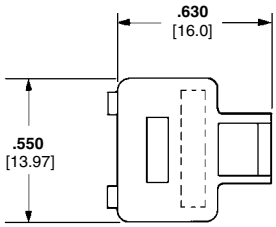

UL94V-2 Nylon material, natural color—**641777-1**

UL94V-0 Nylon material—**641778-1**

For 2 In-Line and 6 Matrix Circuit Cap Housings Only

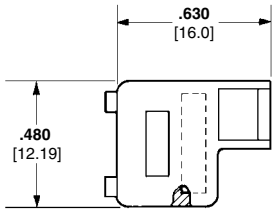

UL94V-2 Nylon material, natural color—**643182-1**
UL94V-0 Nylon material—**643182-2**

Style	Number of Circuits	A Dim.	Insert Supplied	Single Wire Dia. Range	Wire Bundle Dia. Range	Part Numbers: UL94V-2 Nylon, Natural Color	Part Numbers: UL94V-0 Nylon
In-Line	2	**.960** 24.38	Yes	**.040-.190** 1.02-4.83	—	1-640719-0	640713-1
			No	—	**.200-.350** 5.08-8.89	1-640719-1	640713-2
	3	**1.140** 28.96	Yes	**.040-.190** 1.02-4.83	—	1-640720-0	640714-1
			No	—	**.200-.350** 5.08-8.89	641763-1	641945-1
	4	**1.325** 33.65	Yes	**.040-.190** 1.02-4.83	—	641775-1	641776-1
			No	—	**.200-.350** 5.08-8.89	641775-2	641776-2
	5	**1.530** 38.86	Yes	**.040-.190** 1.02-4.83	—	643030-3	643030-1
			No	—	**.200-.350** 5.08-8.89	643030-2	643030-4
	6 Note 5	**1.780** 45.21	Yes	**.040-.190** 1.02-4.83	—	643585-1	643313-1
			No	—	**.200-.350** 5.08-8.89	643585-2	643313-2
	8 Note 5	**2.280** 56.08	Yes	**.040-.190** 1.02-4.83	—	—	643314-1
			No	—	**.200-.350** 5.08-8.89	—	643314-2
Matrix	6	**1.030** 26.16	Yes	—	**.120-.650** 3.05-16.51	1-640721-0	640715-1
	9	**1.030** 26.16	Yes	—	**.120-.650** 3.05-16.51	1-640722-0	640716-1
	12	**1.280** 32.51	Yes	—	**.150-.750** 3.81-19.05	1-640723-0	640717-1
	15	**1.530** 38.86	Yes	—	**.200-.850** 5.08-21.59	1-640724-0	640718-1

Notes:
1. Cable clamping insert comes attached to strain relief. It can be used to provide additional adjustment for small wire bundles or discarded.
2. Insert to be positioned as shown by dotted lines.
3. **Strain relief part number represents one-half of a strain relief. Two strain reliefs required per housing.**
4. Must use cap housing adapters when attaching strain reliefs to a cap housing. **Two adapters required per housing.**
5. Strain reliefs for 6 and 8 circuit In-Line fits plug housings only.

Note: All part numbers are RoHS Compliant.

Dimensions are in inches and millimeters unless otherwise specified. Values in brackets are metric equivalents.

Dimensions are shown for reference purposes only. Specifications subject to change.

USA: 1-800-522-6752
Canada: 1-905-470-4425
Mexico: 52-55-1106-0800
C. America: 57-1-254-4444

South America: 55-11-2103-6000
Hong Kong: 852-2735-1628
Japan: 81-44-844-8013
UK: 44-208-420-8341

Universal MATE-N-LOK Flanged Cap Housings with Twist and Lock Feature

Product Facts

- **Available in a 6, 9, and 12 circuit design**
- **Designed for household appliances where a bulkhead connector system is needed in conjunction with foam-in insulation**
- **Mates with standard Universal MATE-N-LOK plug housings (page 168)**
- **Accepts Universal MATE-N-LOK pin and socket contacts (page 167)**
- **Designed to utilize the Splash Proof/Sealed Universal MATE-N-LOK seals for additional sealing protection (pages 174-175)**

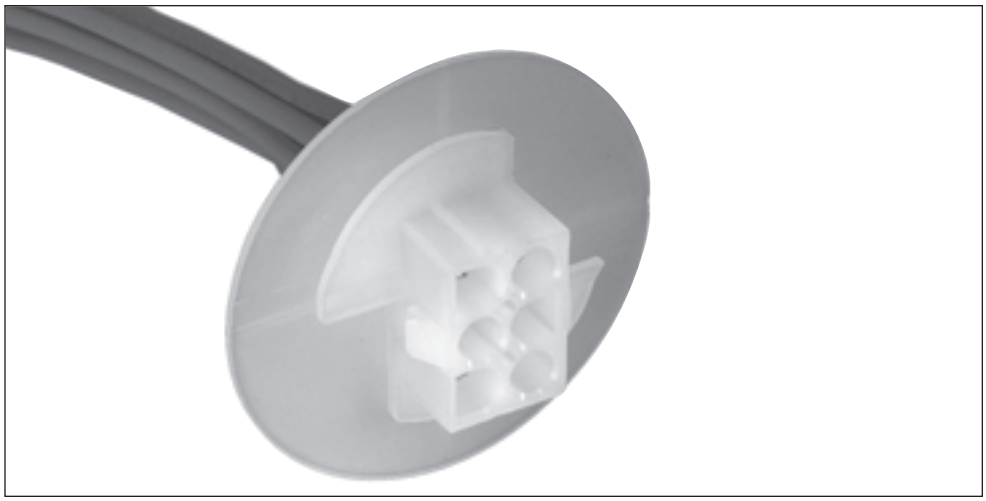

Material and Finish

Housing—Nylon, UL 94V-0 or UL 94V-2 rated

Contacts—Phosphor Bronze or Brass

Plating—Pre-tin or Gold

Related Product Data

Contacts—pages 166-167

Plug Housings—page 168

Seals—page 174

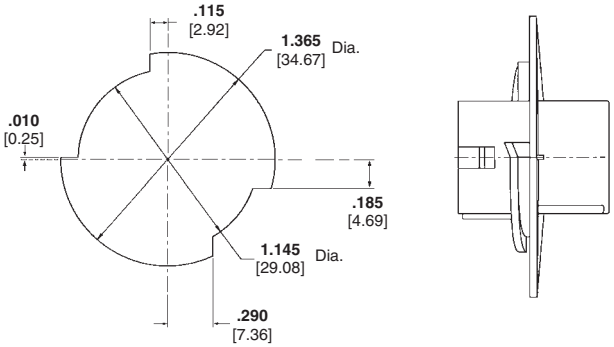

Recommended Panel Cutout (for 6 and 9 Pos. Housings)

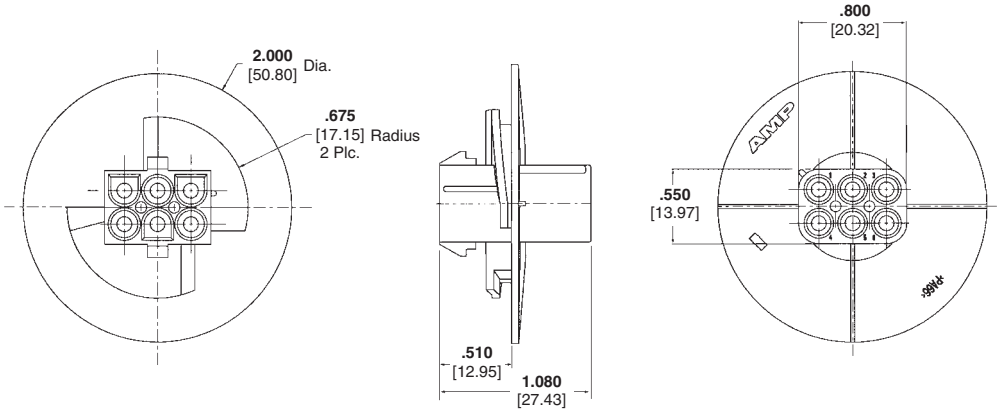

Notes:
1. Recommended Panel Thickness: 0.76-2.29 [.030-.090]
2. Panel must be punched so that the housing enters the panel in the same direction as the punch.
3. Asymmetrical panel cutout provides polarization for Pin 1 location.

Number of Circuits	Cap Housing Part Numbers	
	UL 94V-0	UL 94V-2
6	794760-1	794714-1
9	794761-1	794715-1
12	794762-1	794716-1

Note: **All part numbers are RoHS Compliant.**

Catalog 82181
Revised 5-06

www.tycoelectronics.com

Dimensions are in inches and millimeters unless otherwise specified. Values in brackets are metric equivalents.

Dimensions are shown for reference purposes only. Specifications subject to change.

USA: 1-800-522-6752
Canada: 1-905-470-4425
Mexico: 52-55-1106-0800
C. America: 57-1-254-4444

South America: 55-11-2103-6000
Hong Kong: 852-2735-1628
Japan: 81-44-844-8013
UK: 44-208-420-8341

Universal MATE-N-LOK Sealed Bulkhead Connectors

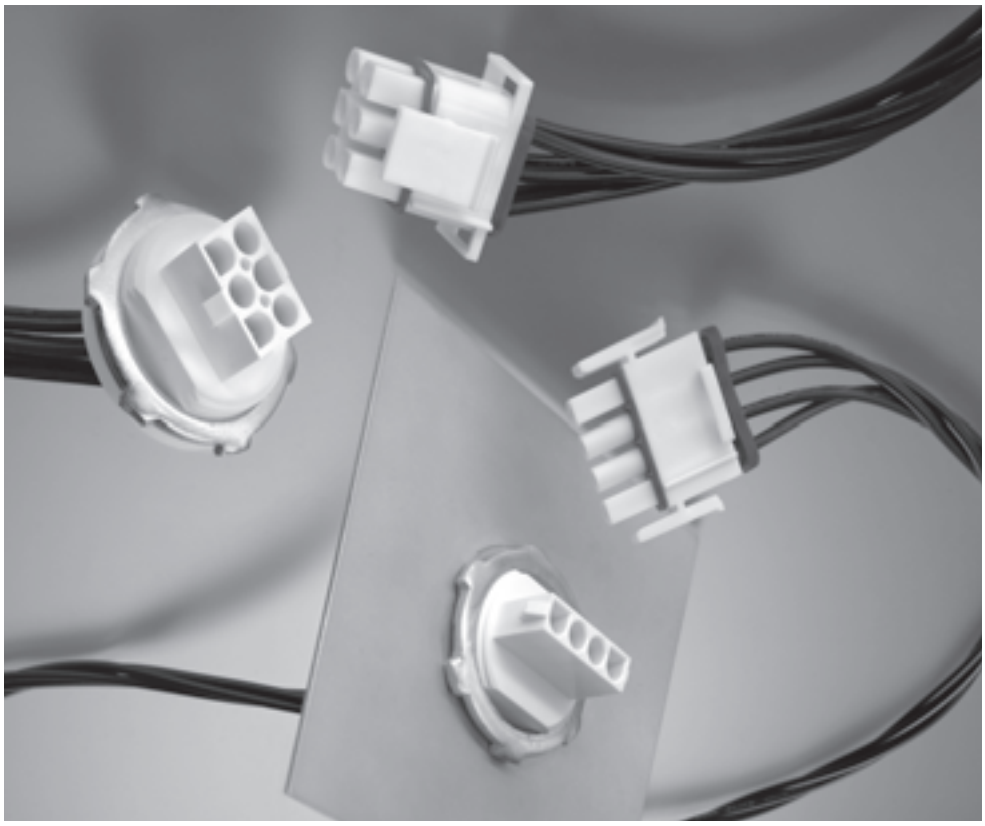

Product Facts

- **Bulkhead mount Universal MATE-N-LOK connector that facilitates sealed panel mounting and works with existing Universal MATE-N-LOK seals to provide a fully-sealed interconnection system.**
- **Available in 4, 6, 9 and 12 positions**
- **Sealed, flange mount design**
- **Mates to standard Universal MATE-N-LOK plug housings**
- **Accepts standard Universal MATE-N-LOK contacts**
- **Works with standard Universal MATE-N-LOK connector interface and wire seals**
- **Anti-rotation feature aids installation**
- **Rear mount flange design enables use in wire harnesses**
- **Pins and sockets can be intermixed in the same housing**
- **UL Recognized, File No. E28476**
- **CSA Certified, File No. 1030930**

Applications

- **Vending Machines**
- **Industrial Machinery**
- **Lighting**
- **HVAC Equipment**

Performance Characteristics

Dielectric Withstanding Voltage—5.0 KVAC or 5.0 KVDC between adjacent circuits

Insulation Resistance—1000 megohms minimum initial between adjacent circuits

Voltage Rating—600 V AC or DC

Durability—50 cycles, mating and unmating

Technical Documents

Product Specification
108-1031 Universal MATE-N-LOK Connectors

Application Specification
114-1010 Universal MATE-N-LOK Contacts

Instruction Sheet
408-10017 Universal MATE-N-LOK Bulkhead Connectors

Dimensions are in inches and millimeters unless otherwise specified. Values in brackets are metric equivalents.

Dimensions are shown for reference purposes only. Specifications subject to change.

USA: 1-800-522-6752
Canada: 1-905-470-4425
Mexico: 52-55-1106-0800
C. America: 57-1-254-4444

South America: 55-11-2103-6000
Hong Kong: 852-2735-1628
Japan: 81-44-844-8013
UK: 44-208-420-8341

Universal MATE-N-LOK Sealed Bulkhead Connectors (Continued)

Connector Housings

Material and Finish

Housing—Nylon, UL 94V-0 rated

Contacts—Brass with pre-tin or gold plating

O-ring Seal—Neoprene

Locking Nut—Steel, zinc plated

4 Position Connector Housing (shown)

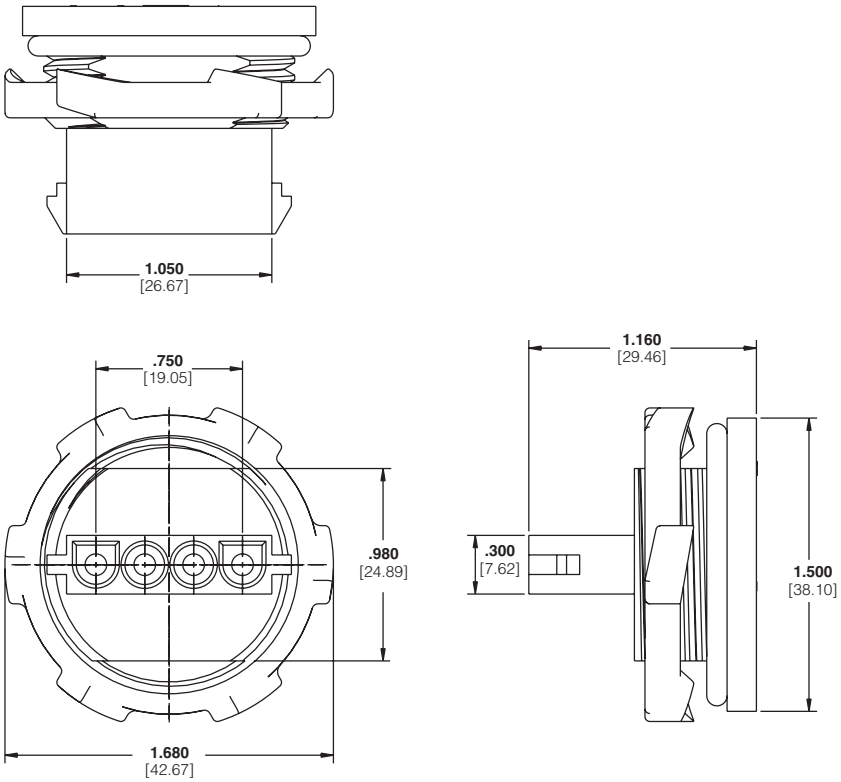

Recommended
Panel Cut-Out for 4, 6 & 9 Position Product Only

Recommended
Panel Cut-Out for 12 Position Product Only

No. of Pos.	Style	Housing Part Number
4	In Line	1604256-1
6	Matrix	1604210-1
9	Matrix	1604254-1
12	Matrix	1604941-1

Note: All part numbers are RoHS Compliant.

Dimensions are in inches and millimeters unless otherwise specified. Values in brackets are metric equivalents.

Dimensions are shown for reference purposes only. Specifications subject to change.

USA: 1-800-522-6752
Canada: 1-905-470-4425
Mexico: 52-55-1106-0800
C. America: 57-1-254-4444

South America: 55-11-2103-6000
Hong Kong: 852-2735-1628
Japan: 81-44-844-8013
UK: 44-208-420-8341

Splash Proof Seals

Product Facts

- **Economical splash proof/ immersible sealed connector system**
- **No design changes to existing Universal MATE-N-LOK product**
- **Existing applications utilizing Universal MATE-N-LOK connectors can be upgraded to a splash proof system**
- **Utilizes two wire seals and one interface seal**
- **Wire range is 20-14 AWG [.5-2.0] with insulation diameter range .060-.130 [1.52-3.30]**
- **.110-.130 [2.79-3.30] insulation diameter passed European IP sealing level 5/6 + 7 (swirling dust/immersion to 1 meter for 30 minutes)**
- **.060-.110 [1.52-2.79] insulation diameter passed European IP sealing level 5/5 + 7 (swirling dust/heavy seas)**
- **Universal MATE-N-LOK II keying plug can be used to seal unused circuits**
- **Primary application is for wire-to-wire; wire-to-board application must use a closed bottom header**

Material

Silicone rubber, blue color

Technical Documents

Product Specification

108-1031-1 Splash Proof Seal, Universal MATE-N-LOK Connectors

Contacts—page 175

Housings—page 168

Instruction Sheet

408-3392 Universal MATE-N-LOK Splash Proof Seals

Note: For proper use of this product, customer should make sure that Instruction Sheet 408-3392 is available for review.

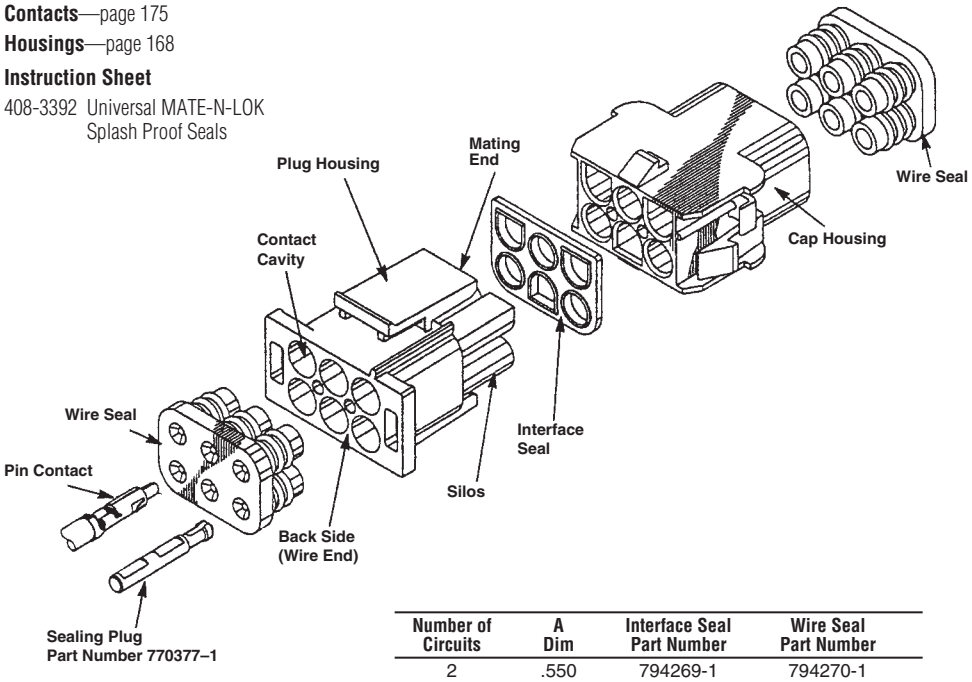

Number of Circuits	A Dim	Interface Seal Part Number	Wire Seal Part Number
2	.550	794269-1	794270-1
3	.800	794271-1	794272-1
4	1.050	794273-1	794274-1
6	—	794275-1	794276-1
9	.800	794277-1	794278-1
12	1.050	794279-1	794280-1
15	1.300	794281-1	794282-1

Note: One interface seal and two wire seals required per mated assembly.

Note: All part numbers are RoHS Compliant.

2, 3, 4 Circuit, In-Line

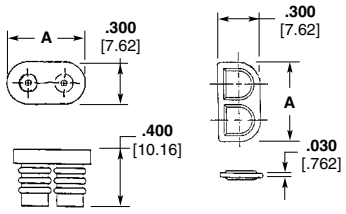

wire interface

6 Circuit, Matrix

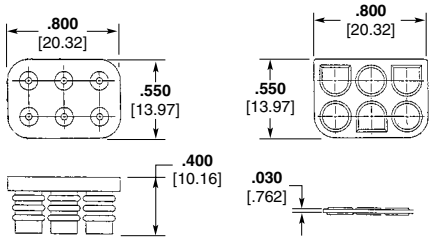

wire interface

9, 12, and 15 Circuit, Matrix

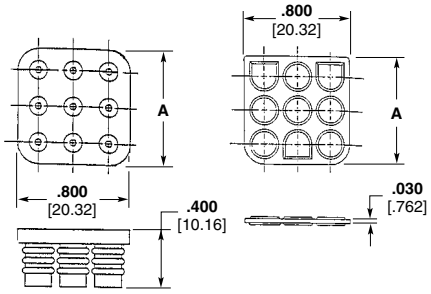

wire interface

Dimensions are in inches and millimeters unless otherwise specified. Values in brackets are metric equivalents.

Dimensions are shown for reference purposes only. Specifications subject to change.

USA: 1-800-522-6752
Canada: 1-905-470-4425
Mexico: 52-55-1106-0800
C. America: 57-1-254-4444

South America: 55-11-2103-6000
Hong Kong: 852-2735-1628
Japan: 81-44-844-8013
UK: 44-208-420-8341

Universal MATE-N-LOK Sealed Connectors (Continued)

Contacts (used with Splash Proof Seals)

Solid pin diameter .084 [2.13]

Split pin diameter .086 [2.18]

Stock thickness .012 [.305] unless otherwise noted.

These contacts can be used in either Universal MATE-N-LOK Plug or Cap housings **only**.

Related Product Data

Product Specification

108-1031 Universal MATE-N-LOK Connectors

Application Specification

114-1010 Universal MATE-N-LOK Contacts

Performance Characteristics— pages 163-164
Technical Documents— pages 163 and 199-200
Application Tooling— pages 201-204
Housings—page 168

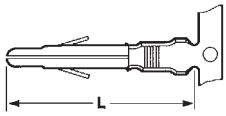

Solid Pin

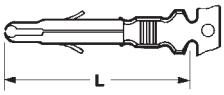

Split Pin

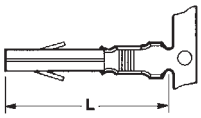

Socket

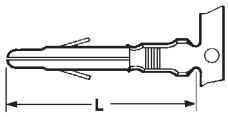

Grounding Pin

(.100 [2.54] longer than standard pin)

(Mate first, break last, not for interrupting current)

Wire Size Range AWG [mm²]	Ins. Dia. Range	L Dim. Pin	L Dim. Socket	Material & Finish	Style	Contact Part Numbers Pin Strip Form	Pin Loose Piece	Socket Strip Form	Socket Loose Piece	HDM Applicator Part No.	Hand Tool Part No.
20-14 [.5-2.0]	**.060-.130** 1.52-3.30	**.790** 20.06	**.760** 19.30	Brass, Pre-tin	Solid	350218-1	350547-1	350536-1	350550-1	687763-1[3] 687763-2[3] 687763-6[3]	91500-1
				Brass, Gold[1]		350218-2	350547-2	350536-2	350550-2		
				Brass, Select Gold[2]		350218-7	350547-7	350536-7	350550-7		
				Phos. Brz., Pre-tin		350218-3	350547-3	350536-3	350550-3		
				Phos. Brz., Select Gold[2]		350218-6	350547-6	350536-6	350550-6		
				Brass, Pre-tin	Split	350687-1	350705-1	—	—		
				Brass, Gold[1]		350687-2	350705-2	—	—		
				Brass, Select Gold[2]		350687-7	350705-7	—	—		
		.890 22.60	—	Brass, Pre-Tin	Grounding	350654-1	350669-1				

[1]Gold Finish — Plated with .000030 [.000762] min. gold in mating area and inside wire barrel over .000050 [.00127] min. nickel underplate on entire contact.
[2]Select Gold Finish — Plated with .000030 [.000762] min. gold in mating area over .000050 [.00127] min. nickel underplate on entire contact.
[3]HDM Applicator part number ending in -1, is used on AMPOMATOR CLS Machine with T or G Terminators, -2 is used on AMP-O-LECTRIC Model K Machine, -4 & -6 are used on AMP-O-LECTRIC Model G Machine. See pages 201-204 for further information.

Notes:
1. Split pins recommended for use in housings having 6, 9, 12 and 15 circuits to reduce mating force.
2. Phosphor bronze material contacts are available for use in high temperature/humidity cycling applications, consult Tyco Electronics.
3. 18-24 AWG contacts (page 166) can be used with splash proof seals if insulation diameter range is .060-.100 [1.52-2.54].

Universal MATE-N-LOK II Keying Plug/Splash Proof Sealing Plug

IS 408-3392

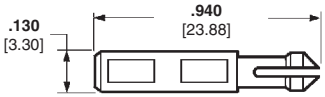

Part Number
UL94V-0 Nylon material — **770377-1**

Related Product Data

Housings— page 168
Technical Documents— pages 163 and 199-200

Seal Latch Tool
Part No. 794381-1
IS 408-3392

Contact Extraction Tool
Part No. 318851-1
IS 408-4371

Contact Insertion Tool (For inserting contacts applied to small diameter wire)
Part No. 91002-1
IS 408-7347

Note: All part numbers are RoHS Compliant.

Dimensions are in inches and millimeters unless otherwise specified. Values in brackets are metric equivalents.

Dimensions are shown for reference purposes only. Specifications subject to change.

USA: 1-800-522-6752
Canada: 1-905-470-4425
Mexico: 52-55-1106-0800
C. America: 57-1-254-4444

South America: 55-11-2103-6000
Hong Kong: 852-2735-1628
Japan: 81-44-844-8013
UK: 44-208-420-8341

Universal MATE-N-LOK Connectors

PC Board Vertical Pin Headers

.250 [6.35] Centerline spacing

Material

Housing — UL94V-2 Nylon, natural color
UL94V-0 Nylon

Contacts — Phosphor bronze

Solder tail diameter .062 [1.57]

Related Product Data

Product Specification

108-1053 Universal MATE-N-LOK PC Board Headers

Performance Characteristics— pages 163-164
Recommended PC Board Hole Layout— page 178
Technical Documents— pages 163 and 199-200

Mating Connectors

Universal MATE-N-LOK
Plug Housings — page 168

Universal MATE-N-LOK II
Plug Housings — pages 187-188

2, 3, 4, 5, 6 and 8 Circuit, In-Line

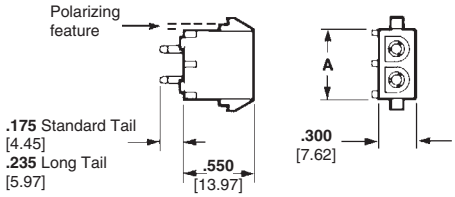

Number of Circuits	A Dim.	Flammability Rating	Pin Finish	Pin Header Part Numbers: Standard Tail[2]	Standard Tail Polarized[2]	Long Tail[3]	Mates with Plug Housing Part Number (Using Socket Contacts): Universal MATE-N-LOK	Universal MATE-N-LOK II
2	.550 13.97	UL94V-2	Pre-tin	350428-1	641963-1	350582-1	1-480698-0	—
			Duplex[1]	350428-4	641963-3	350582-4		
		UL94V-0	Pre-tin	350786-1	641964-1 1-641964-1[4]	350787-1	350777-1	770017-1
			Duplex[1]	350786-3	641964-3	350787-3		
3	.800 20.32	UL94V-2	Pre-tin	350429-1	641965-1	350583-1	1-480700-0	—
			Duplex[1]	350429-4	—	350583-4		
		UL94V-0	Pre-tin	350789-1	641966-1 1-641966-1[4]	350790-1	350766-1	770018-1
			Duplex[1]	350789-3	—	350790-3		
4	1.050 26.67	UL94V-2	Pre-tin	350430-1	641967-1	350584-1	1-480702-0	—
			Pre-tin	770351-1[5]	—	—		
			Duplex[1]	350430-4	—	350584-4		
		UL94V-0	Pre-tin	350792-1	641968-1	350793-1	350779-1	770019-1
			Duplex[1]	350792-3	—	350793-3		
5	1.300 33.02	UL94V-2	Pre-tin	640466-1	643405-1	—	1-480763-0	—
			Duplex[1]	640466-3	—	—		
		UL94V-0	Pre-tin	640900-1	643406-1	—	350809-1	770016-1
			Duplex[1]	640900-3	—	—		
6	1.550 39.37	UL94V-2	Pre-tin	641832-1	643407-1	—	640585-1	—
		UL94V-0	Pre-tin	641831-1	643408-1	—	640581-1	—
8	2.050 52.07	UL94V-2	Pre-tin	641825-1	—	770143-1	640586-1	—
		UL94V-0	Pre-tin	641828-1	643410-1	770272-1	640582-1	—
		UL94V-0	Duplex[1]	—	643410-3	770272-3	—	—

6, 9, 12 and 15 Circuit, Matrix

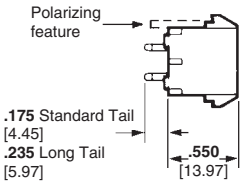

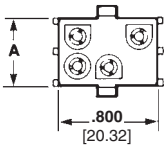

Number of Circuits	A Dim.	Flammability Rating	Pin Finish	Pin Header Part Numbers: Standard Tail[2]	Standard Tail Polarized[2]	Long Tail[3]	Mates with Plug Housing Part Number (Using Socket Contacts): Universal MATE-N-LOK	Universal MATE-N-LOK II
6	.550 13.97	UL94V-2	Pre-tin	350431-1	641969-1	350585-1	1-480704-0	—
					—	643749-1[5]		
			Duplex[1]	350431-4	—	350585-4		
		UL94V-0	Pre-tin	350711-1	641970-1 1-641970-1[4]	350732-1	350715-1	770020-1
			Duplex[1]	350711-4	641970-3	350732-4		
9	.800 20.32	UL94V-2	Pre-tin	350432-1	641971-1	350586-1	1-480706-0	—
			Duplex[1]	350432-4	641971-3	350586-4		
		UL94V-0	Pre-tin	350712-1	641972-1 1-641972-1[4]	350742-1	350720-1	770021-1
			Duplex[1]	350712-4	641972-3	350742-4		
12	1.050 26.67	UL94V-2	Pre-tin	350433-1	641973-1	350587-1	1-480708-0	—
			Duplex[1]	350433-4	—	350587-4		
		UL94V-0	Pre-tin	350713-1	641974-1 1-641974-1[4]	350737-1	350735-1	770022-1
			Duplex[1]	350713-4	641974-3	350737-4		
15	1.300 33.02	UL94V-2	Pre-tin	350434-1	641975-1	350588-1	1-480710-0	—
			Duplex[1]	350434-4	—	350588-4		
		UL94V-0	Pre-tin	350714-1	641976-1	350738-1	350736-1	770023-1
			Duplex[1]	350714-4	641976-4	350738-4		

[1]Duplex Finish — Plated with .000030 [.000762] min. gold in mating area, matte tin on solder tail end over .000050 [.00127] min. nickel underplate on entire contact.
[2]Use Standard Tail for .062 [1.57] thick PC Board. [3]Use Long Tail for .125 [3.18] thick PC Board.
[4]Black in color. [5]No drain holes, used w/ seals, page 174. **Note: All part numbers are RoHS Compliant.**

Dimensions are in inches and millimeters unless otherwise specified. Values in brackets are metric equivalents.

Dimensions are shown for reference purposes only. Specifications subject to change.

USA: 1-800-522-6752
Canada: 1-905-470-4425
Mexico: 52-55-1106-0800
C. America: 57-1-254-4444

South America: 55-11-2103-6000
Hong Kong: 852-2735-1628
Japan: 81-44-844-8013
UK: 44-208-420-8341

Universal MATE-N-LOK Connectors (Continued)

PC Board Vertical Socket Headers

.250 [6.35] Centerline spacing

Material

Housing —
UL94V-2 Nylon, natural color
UL94V-0 Nylon

Contacts — Phosphor bronze

Solder tail diameter .062 [1.57]

Related Product Data

Product Specification
108-1053 Universal MATE-N-LOK PC Board Headers

Performance Characteristics— pages 163-164
Recommended PC Board Hole Layout— page 178
Technical Documents— pages 163 and 199-200

Mating Connectors

Universal MATE-N-LOK
Plug Housings — page 168

Universal MATE-N-LOK II
Plug Housings — pages 187-188

2, 3, 4, 5, and 6 Circuit, In-Line

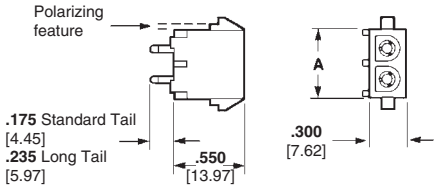

Number of Circuits	A Dim.	Flammability Rating	Socket Finish	Socket Header Part Numbers: Standard Tail[2]	Socket Header Part Numbers: Standard Tail Polarized[2]	Socket Header Part Numbers: Long Tail[3]	Mates with Plug Housing Part Number (Using Pin Contacts): Universal MATE-N-LOK	Mates with Plug Housing Part Number (Using Pin Contacts): Universal MATE-N-LOK II
2	.550 13.97	UL94V-2	Pre-tin	350759-4	643411-1	350986-4	1-480698-0	—
			Duplex[1]	350759-5	—	—		
		UL94V-0	Pre-tin	350824-1	643412-1	350831-1	350777-1	770017-1
			Duplex[1]	350824-4	643412-3	—		
3	.800 20.32	UL94V-2	Pre-tin	350760-4	643413-1	350987-4	1-480700-0	—
			Duplex[1]	350760-5	—	—		
		UL94V-0	Pre-tin	350825-1	643414-1	350832-1	350766-1	770018-1
			Duplex[1]	350825-4	643414-3	350832-4		
4	1.050 26.67	UL94V-2	Pre-tin	350761-4	643415-1	350988-4	1-480702-0	—
			Duplex[1]	350761-5	—	350988-5		
		UL94V-0	Pre-tin	350826-1	643416-1	350833-1	350779-1	770019-1
			Duplex[1]	350826-4	—	350833-4		
5	1.300 33.02	UL94V-2	Pre-tin	640467-1	—	—	1-480763-0	—
			Pre-tin	640467-3	—	—		
		UL94V-0	Pre-tin	640901-1	—	—	350809-1	770016-1
			Duplex[1]	640901-3	—	—		
6	1.550 39. 37	UL94V-0	Duplex[1]	770262-3	—	—	640581-1	—

6, 9, 12 and 15 Circuit, Matrix

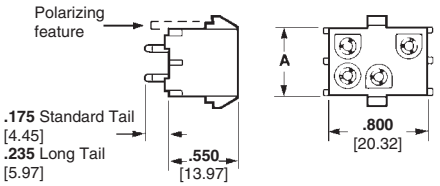

Number of Circuits	A Dim.	Flammability Rating	Socket Finish	Socket Header Part Numbers: Standard Tail[2]	Socket Header Part Numbers: Standard Tail Polarized[2]	Socket Header Part Numbers: Long Tail[3]	Mates with Plug Housing Part Number (Using Pin Contacts): Universal MATE-N-LOK	Mates with Plug Housing Part Number (Using Pin Contacts): Universal MATE-N-LOK II
6	.550 13.97	UL94V-2	Pre-tin	350762-4	643423-1	350989-4	1-480704-0	—
			Duplex[1]	350762-5	—	350989-5		
		UL94V-0	Pre-tin	350827-1	643424-1	350834-1	350715-1	770020-1
			Duplex[1]	350827-4	643424-3	350834-4		
9	.800 20.32	UL94V-2	Pre-tin	350763-4	643425-1	350990-4	1-480706-0	—
			Duplex[1]	350763-5	—	350990-5		
		UL94V-0	Pre-tin	350828-1	643426-1	350835-1	350720-1	770021-1
			Duplex[1]	350828-4	643426-3	350835-4		
12	1.050 26.67	UL94V-2	Pre-tin	350764-4	—	350991-4	1-480708-0	—
			Duplex[1]	350764-5	—	350991-5		
		UL94V-0	Pre-tin	350829-1	643428-1	350836-1	350735-1	770022-1
			Duplex[1]	350829-4	—	350836-4		
15	1.300 33.02	UL94V-2	Pre-tin	350765-4	643429-1	350992-4	1-480710-0	—
			Duplex[1]	350765-5	—	—		
		UL94V-0	Pre-tin	350830-1	643430-1	350837-1	350736-1	770023-1
			Duplex[1]	350830-4	—	350837-4		

[1]Duplex Finish — Plated with .000030 [.000762] min. gold in mating area, matte tin on solder tail end over .000050 [.00127] min. nickel underplate on entire contact.
[2]Use Standard Tail for .062 [1.57] thick PC Board.
[3]Use Long Tail for .125 [3.18] thick PC Board.

Note: All part numbers are RoHS Compliant.

Dimensions are in inches and millimeters unless otherwise specified. Values in brackets are metric equivalents.

Dimensions are shown for reference purposes only. Specifications subject to change.

USA: 1-800-522-6752
Canada: 1-905-470-4425
Mexico: 52-55-1106-0800
C. America: 57-1-254-4444

South America: 55-11-2103-6000
Hong Kong: 852-2735-1628
Japan: 81-44-844-8013
UK: 44-208-420-8341

Universal MATE-N-LOK Connectors (Continued)

Recommended PC Board Hole Layouts for Pin and Socket Vertical Headers

Related Product Data

Vertical Headers—pages 176-177

2, 3, 4, 5, 6 and 8 Circuit, In-Line

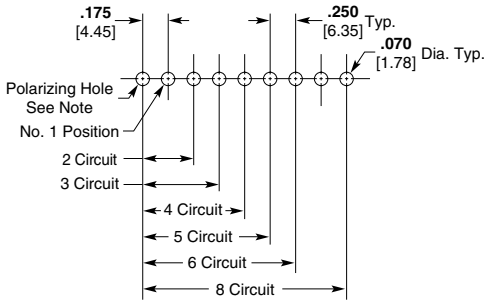

6, 9, 12 and 15 Circuit, Matrix

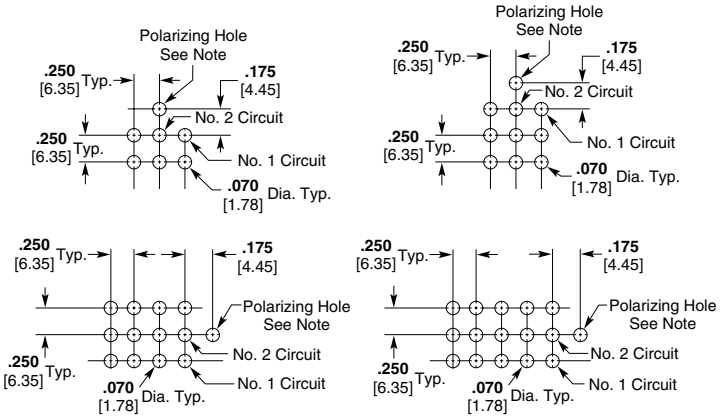

Note: Polarizing hole **.070** [1.78] Dia. required for polarized headers only.

PC Board Vertical Pin Headers with ACTION PIN Contacts

Material and Finish

Housing — PBT, black

Flammability Rating — UL94V-0

Contacts — Copper alloy, plated with tin over nickel on entire contact

Related Product Data

Performance Characteristics—pages 163-164

Technical Documents—pages 163 and 199-200

Product Specification

108-5222 ACTION PIN Universal MATE-N-LOK Header Assembly

Mating Connectors

Universal MATE-N-LOK
Plug Housings — page 168

Universal MATE-N-LOK II
Plug Housings — pages 187-188

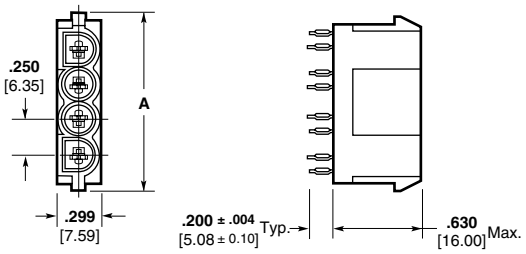

Number of Circuits	A Dim.	Part Number	Mates with Plug Housing Part Number (Using Socket Contacts)	
			Universal MATE-N-LOK	Universal MATE-N-LOK II
2	**.750** 19.05	173924-1	1-480698-0 350777-1	770017-1
3	**1.000** 25.40	173925-1	1-480700-0 350766-1	770018-1
4	**1.250** 31.75	173926-1	1-480702-0 350779-1	770019-1

Note: Install in PC Board with arbor tool.

Note: All part numbers are RoHS Compliant.

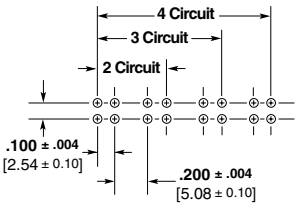

Recommended PC Board Hole Layout

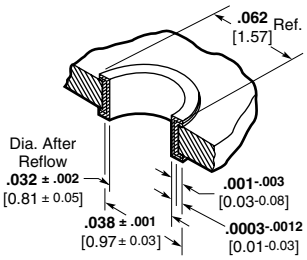

PC Board Hole Dimensions

Dimensions are in inches and millimeters unless otherwise specified. Values in brackets are metric equivalents.

Dimensions are shown for reference purposes only. Specifications subject to change.

USA: 1-800-522-6752
Canada: 1-905-470-4425
Mexico: 52-55-1106-0800
C. America: 57-1-254-4444

South America: 55-11-2103-6000
Hong Kong: 852-2735-1628
Japan: 81-44-844-8013
UK: 44-208-420-8341

Universal MATE-N-LOK Connectors (Continued)

PC Board Right-Angle Pin and Socket Headers

.250 [6.35] Centerline spacing

Material

Housing — Nylon

Contacts — Phosphor bronze

Solder tail width .052 [1.32]

Related Product Data

Product Specification

108-1053 Universal MATE-N-LOK PC Board Headers

Performance Characteristics— pages 163-164

Technical Documents— pages 163 and 199-200

Mating Connectors

Universal MATE-N-LOK

Plug Housings — page 168

Universal MATE-N-LOK II

Plug Housings — pages 187-188

2, 3, 4, 5, 6 and 8 Circuit, In-line

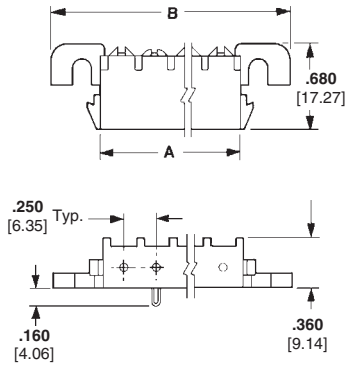

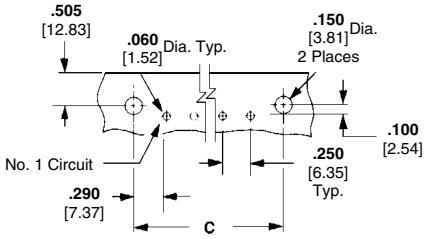

Use 6-32 UNC Pan Head Screw 3/8 [9.53] long for mounting **(Not Supplied)**

Recommended PC Board Hole Layout .062 [1.57] Board Thickness

No. of Circuits	Dimensions A	Dimensions B	Dimensions C	Contact Finish	Right-Angle Header Part Numbers: UL94V-2 Pin	UL94V-2 Socket	UL94V-2 Mates with	UL94V-0 Pin	UL94V-0 Socket	UL94V-0 Mates with: Universal MATE-N-LOK	UL94V-0 Mates with: Universal MATE-N-LOK II
2	.550 13.97	1.245 31.62	.830 21.08	Pre-tin	—	—	—	1-350942-0	643226-1	350777-1	770017-1
								770994-1[2]	—		
				Duplex[1]	—	—	—	3-350942-0	—		
3	.800 20.32	1.495 37.97	1.080 27.43	Pre-tin	—	—	—	1-350943-0	643228-1	350766-1	770018-1
				Duplex[1]	—	—		3-350943-0	3-643228-0		
4	1.050 26.67	1.745 44.32	1.330 33.78	Pre-tin	1-350948-0	—	1-480702-0	1-350944-0	643230-1	350779-1	770019-1
				Duplex[1]	—	—		3-350944-0	3-643230-0		
5	1.300 33.02	1.995 50.67	1.580 40.13	Pre-tin	1-350949-0	—	1-480763-0	1-350945-0	643232-1	350809-1	770016-1
				Duplex[1]	—	—		3-350945-0	3-643232-0		
6	1.550 39.37	2.245 57.02	1.830 46.48	Pre-tin	640587-1	643235-1	640585-1	640583-1	643234-1	640581-1	—
				Duplex[1]	—			640583-3	3-643234-0		
8	2.050 52.07	2.745 69.72	2.330 59.18	Pre-tin	—	643237-1	640586-1	640584-1	643236-1	640582-1	—
				Duplex[1]	—			640584-3	3-643236-0		

[1]Duplex Finish — Plated with .000030 [.000762] min. gold in mating area, matte tin on solder tail end over .000050 [.00127] min. nickel underplate on entire contact. [2]Black in color.

Test Connectors (with spring loaded contacts)

Material

Housing — Nylon

Flammability Rating — UL94V-0

Related Product Data

Mating Connectors — Housings and headers having the same number of circuits. The housings can have pin or socket contacts, or a combination of both.

Mating Housings—page 168

Mating Headers—pages 176-179

Other Mating Connectors

Universal MATE-N-LOK II Housings—pages 187-188

2, 3, 4 and 5 Circuit, In-Line

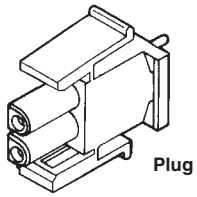

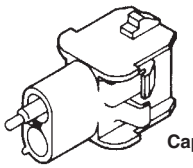

6, 9, 12 and 15 Circuit, Matrix

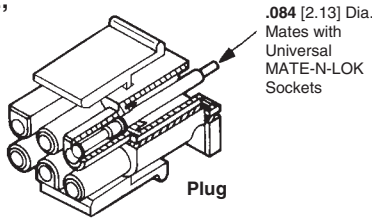

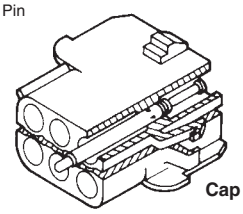

Number of Circuits	Part Numbers: Plug	Part Numbers: Cap
2	350848-2	350849-2
3	350848-3	350849-3
4	350848-4	350849-4
5	350848-5	350849-5
6	350848-6	350849-6
9	350848-9	350849-9
12	1-350848-2	1-350849-2
15	1-350848-5	1-350849-5

Notes:

1. Test probes have 5 amp maximum current rating. 1,000,000 cycles.
2. Test Connector housings are of the same configuration as standard housings. Refer to page 23 for dimensional specifications.

Note: All part numbers are RoHS Compliant.

Dimensions are in inches and millimeters unless otherwise specified. Values in brackets are metric equivalents.

Dimensions are shown for reference purposes only. Specifications subject to change.

USA: 1-800-522-6752
Canada: 1-905-470-4425
Mexico: 52-55-1106-0800
C. America: 57-1-254-4444

South America: 55-11-2103-6000
Hong Kong: 852-2735-1628
Japan: 81-44-844-8013
UK: 44-208-420-8341

Universal MATE-N-LOK Circular Connectors

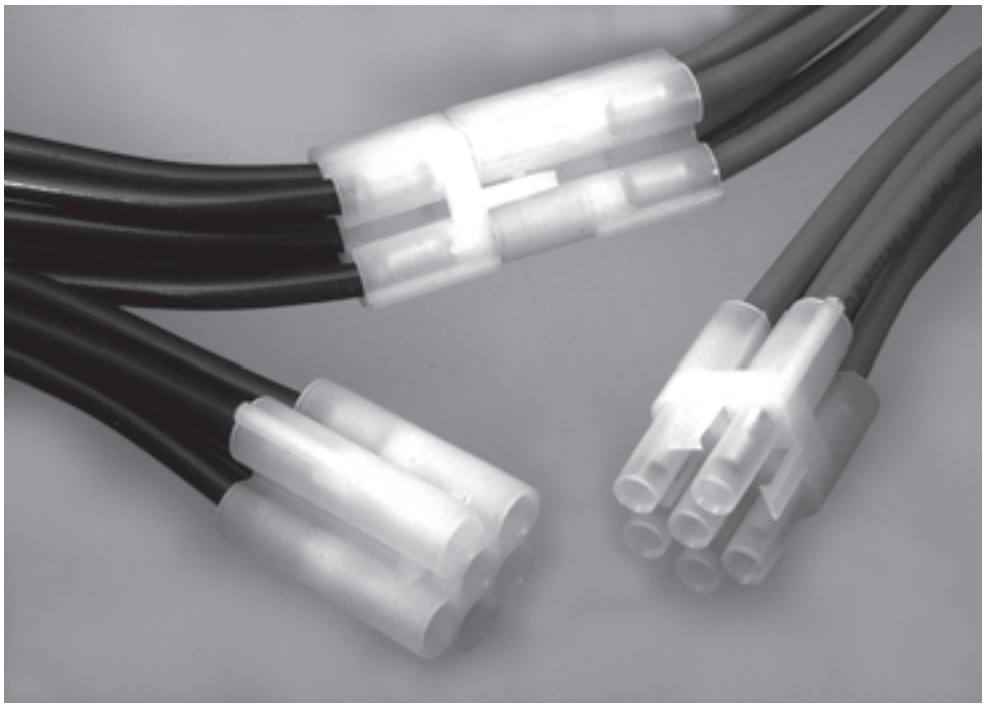

Product Facts

- **Unique product designed to accommodate the specific needs of the lighting industry**
- **Circular design allows the connector to pass through 7/8 inch knock-out holes in electrical fixtures and boxes**
- **6-position accommodates most major electrical industry requirements**
- **Universal MATE-N-LOK connector centerline spacing maintains UL and CSA approvals**
- **Uses standard Universal MATE-N-LOK contacts and application tooling**
- **Positive polarized housing helps prevent incorrect mating**
- **UL Recognized, File No. E28476**
- **CSA Certified, File No. LR7189**

Applications

- **Primary applications are in the Lighting, Vending, and Appliance industries**
- **Applications where use of a completed harness that will pass through a 7/8 inch knock-out is required**
- **Provides the capability to quickly disconnect individual fixtures from sensitive environmental areas and perform maintenance at other sites**
- **Not for interrupting current**

Performance Characteristics

Voltage—600 V AC or DC

Current—20 amps maximum per UL-1977 (6 position, fully energized)

Dielectric Withstanding Voltage—5 KVAC or KVDC

Insulation Resistance—1000 MΩ max. between adjacent circuits

Durability—50 cycles mating and unmating

Contact Retention—15 lb. minimum per contact

Technical Documents

Product Specification
108-2069 Universal MATE-N-LOK Circular Connector

Application Specification
114-1010 Universal MATE-N-LOK Connectors

Dimensions are in inches and millimeters unless otherwise specified. Values in brackets are metric equivalents.

Dimensions are shown for reference purposes only. Specifications subject to change.

USA: 1-800-522-6752
Canada: 1-905-470-4425
Mexico: 52-55-1106-0800
C. America: 57-1-254-4444

South America: 55-11-2103-6000
Hong Kong: 852-2735-1628
Japan: 81-44-844-8013
UK: 44-208-420-8341

Plug
Part No. 794911-1

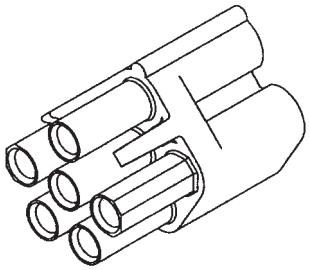

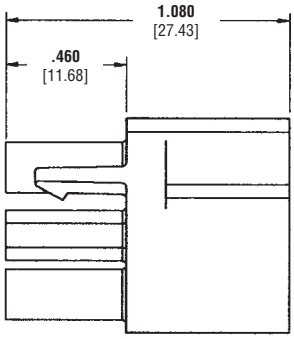

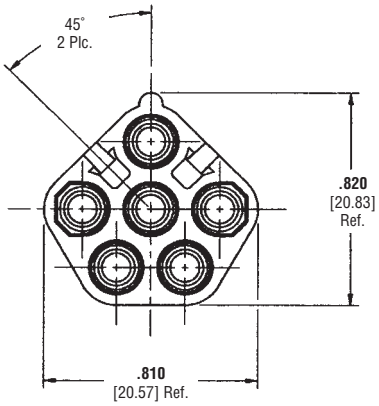

Cap
Part No. 794912-1

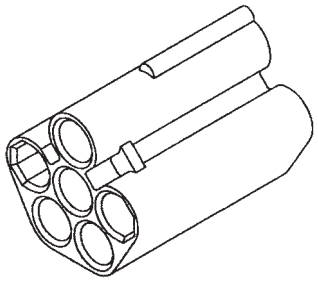

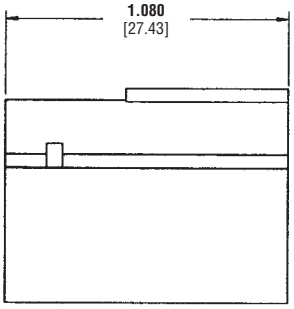

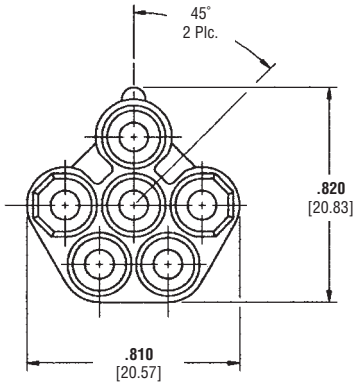

Material and Finish
Housings—Nylon, UL 94V-2 rated

Related Product Data
Contacts—pages 166-167

Note: **All part numbers are RoHS Compliant.**

Dimensions are in inches and millimeters unless otherwise specified. Values in brackets are metric equivalents.

Dimensions are shown for reference purposes only. Specifications subject to change.

USA: 1-800-522-6752
Canada: 1-905-470-4425
Mexico: 52-55-1106-0800
C. America: 57-1-254-4444

South America: 55-11-2103-6000
Hong Kong: 852-2735-1628
Japan: 81-44-844-8013
UK: 44-208-420-8341

Engineering Notes

Catalog 82181
Revised 5-06

www.tycoelectronics.com

Dimensions are in inches and millimeters unless otherwise specified. Values in brackets are metric equivalents.

Dimensions are shown for reference purposes only. Specifications subject to change.

USA: 1-800-522-6752
Canada: 1-905-470-4425
Mexico: 52-55-1106-0800
C. America: 57-1-254-4444

South America: 55-11-2103-6000
Hong Kong: 852-2735-1628
Japan: 81-44-844-8013
UK: 44-208-420-8341