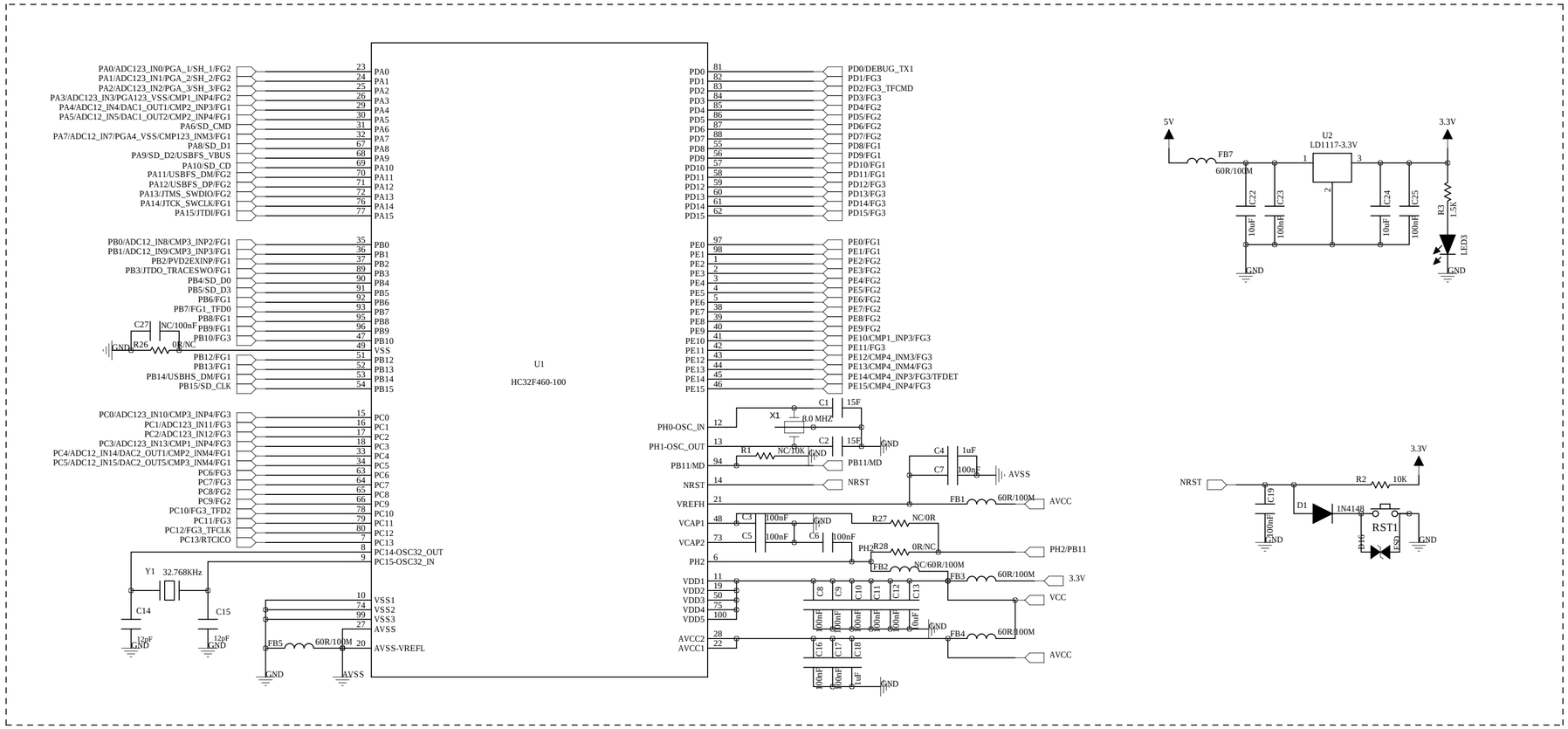

USB

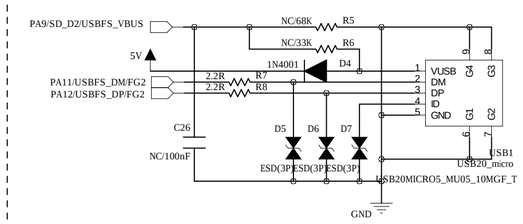

DEBUG

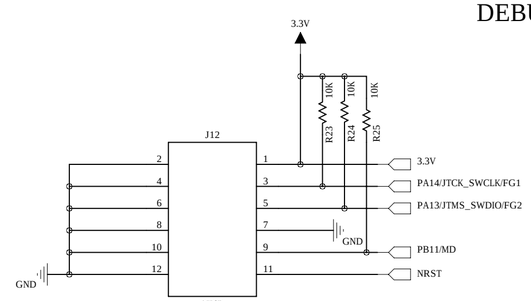

CON

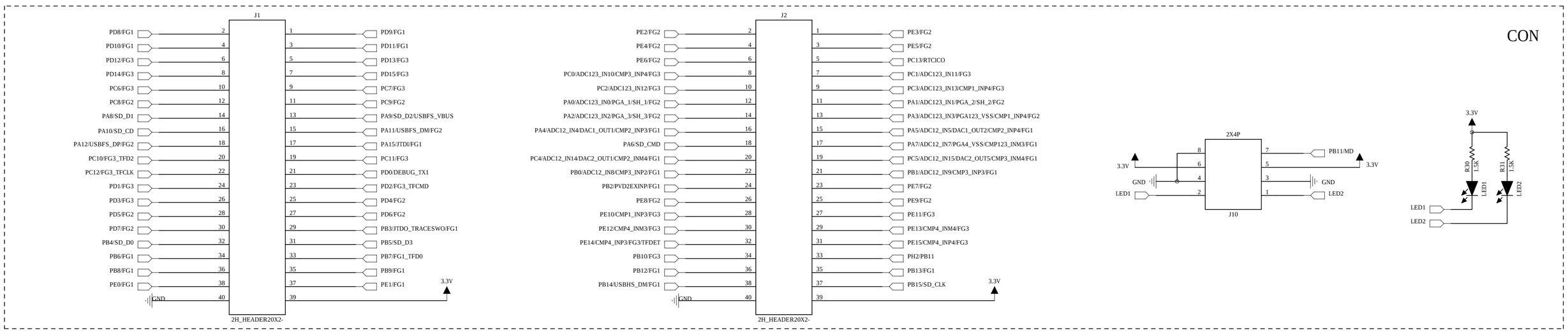

TF-CARD

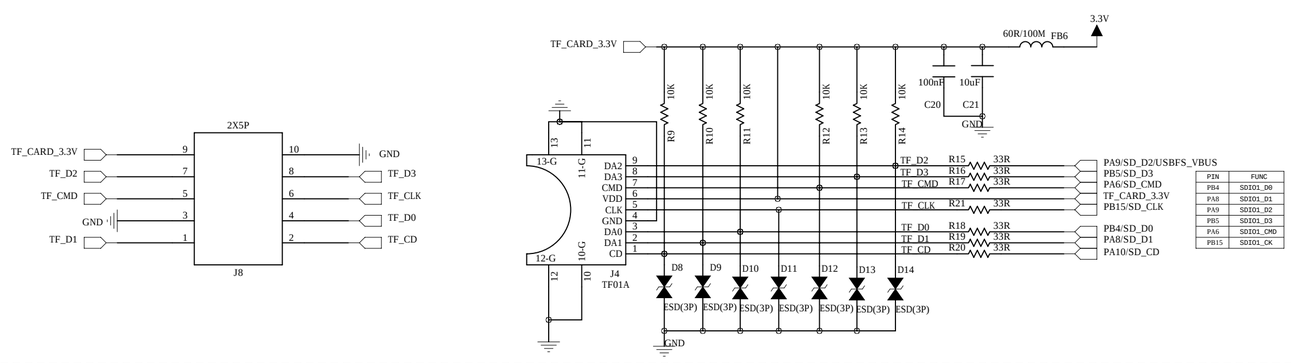

PIN	FUNC
PB4	SDIO1_D0
PA8	SDIO1_D1
PA9	SDIO1_D2
PB5	SDIO1_D3
PA6	SDIO1_CMD
PB15	SDIO1_CK

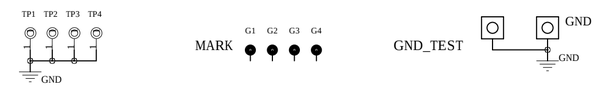

MODEL: EVB-HC32F460-Q		FILE NAME:	
		FILE NO:	
PART NO:	DRN./DATE:	REV:	REV:
PART NAME:	CHK./DATE:	01 03	
DRAWG NO:	APP./DATE:	02	O4