MICRO SWITCH
FREEPORT, ILLINOIS, U.S.A.
A DIVISION OF HONEYWELL
FED. MFG. CODE 81929

SWITCH - ENCLOSED

CATALOG LISTING
12HR43-4

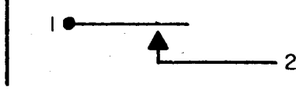

CIRCUIT DIAGRAM

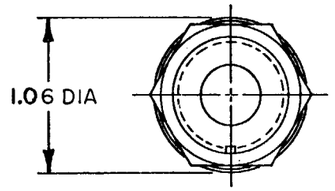

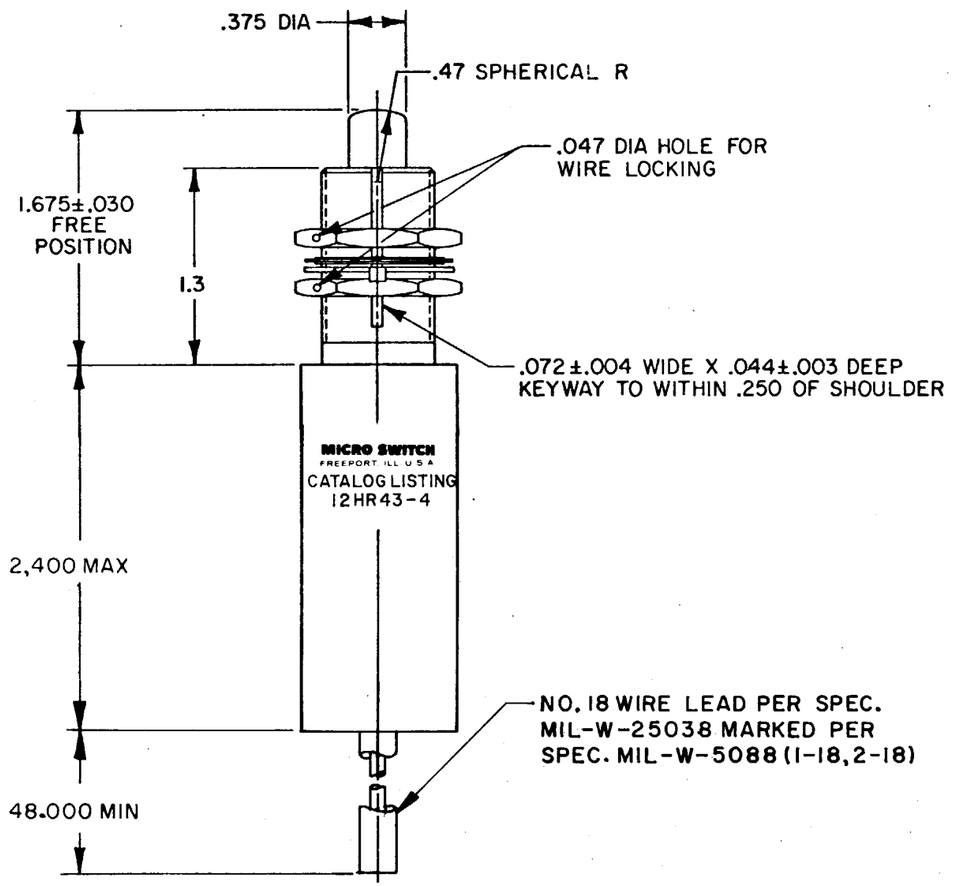

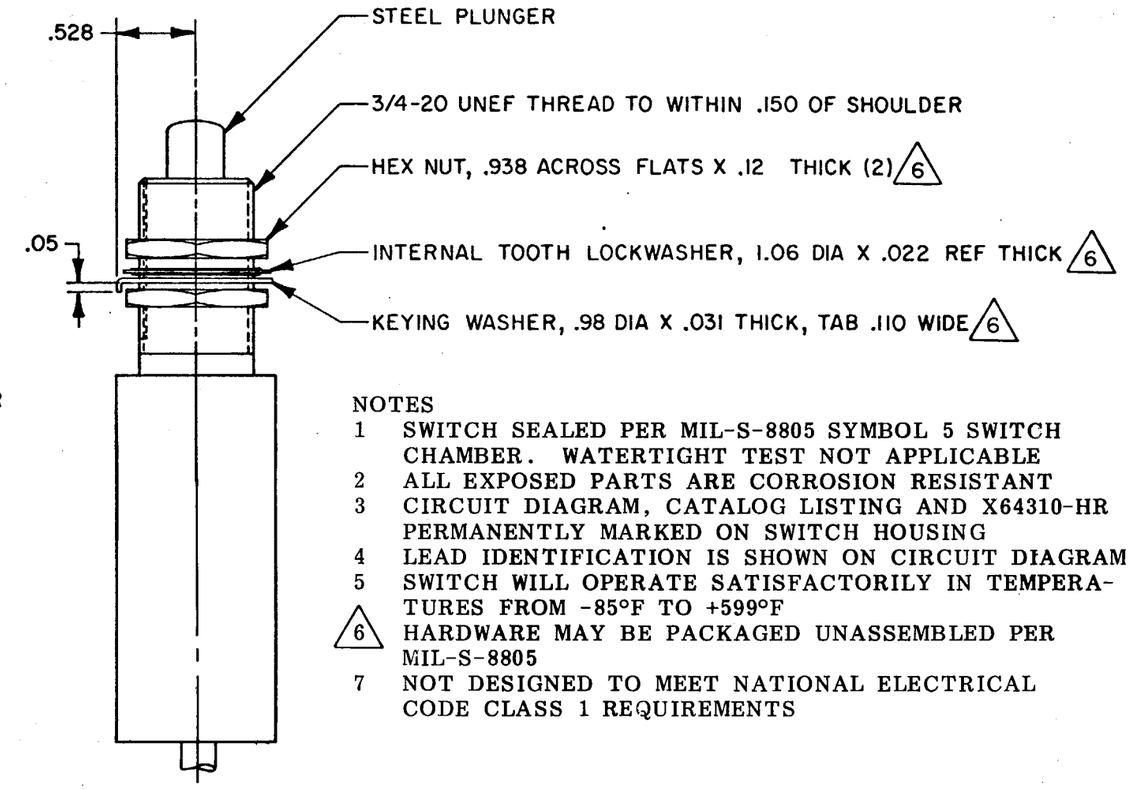

NOTES
1 SWITCH SEALED PER MIL-S-8805 SYMBOL 5 SWITCH CHAMBER. WATERTIGHT TEST NOT APPLICABLE
2 ALL EXPOSED PARTS ARE CORROSION RESISTANT
3 CIRCUIT DIAGRAM, CATALOG LISTING AND X64310-HR PERMANENTLY MARKED ON SWITCH HOUSING
4 LEAD IDENTIFICATION IS SHOWN ON CIRCUIT DIAGRAM
5 SWITCH WILL OPERATE SATISFACTORILY IN TEMPERATURES FROM -85°F TO +599°F
6 HARDWARE MAY BE PACKAGED UNASSEMBLED PER MIL-S-8805
7 NOT DESIGNED TO MEET NATIONAL ELECTRICAL CODE CLASS 1 REQUIREMENTS

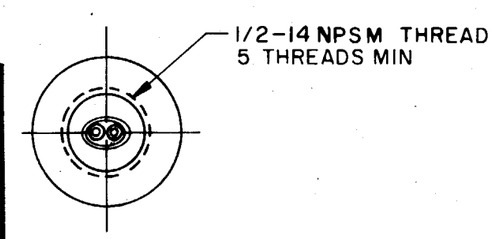

THIS DRAWING COVERS A PROPRIETARY ITEM AND IS THE PROPERTY OF MICRO SWITCH, A DIVISION OF HONEYWELL. THIS DRAWING IS NOT TO BE COPIED OR USED WITHOUT THE APPROVAL OF MICRO SWITCH.

CHARACTERISTICS	
OPERATING FORCE	6-12 LB
FULL OVERTRAVEL	35 LB MAX
RELEASE FORCE	5 LB MIN
PRETRAVEL	.050 MAX
DIFFERENTIAL TRAVEL	.015 MAX
OVERTRAVEL	.250 MIN

ELECTRICAL DATA

CONTACT ARRANGEMENT
S P N O

28 VOLT
RESISTIVE — — — 5 AMP
INDUCTIVE — — — 2 AMP

SCALE FULL
DO NOT SCALE PRINT

TOLERANCES
APPLY TO DESIGN UNITS. CONVERSIONS ARE ONLY FOR REFERENCE. UNLESS NOTED: TOLERANCES ARE ±

	DIM. mm	TOL. mm/in	DIM. in	TOL. mm/in
NO PLACES	X	1/.04		
ONE PLACE	X.X	0.4/.016	X.X	0.8/.03
TWO PLACES	X.XX	0.15/.006	X.XX	0.38/.015
THREE PLACES			X.XXX	0.13/.005
ANGLES				

DESIGN UNITS SI METRIC ☐ US CUSTOMARY ☒

THIRD ANGLE PROJECTION

WEIGHT 21.5 OZ MAX

M 12HR43-4
DRAWING NUMBER
RELEASE NO. PR-9163
REPLACES X64310-HR
ISSUE X 3
CHECK
REVISIONS
A C047277 J A P 8 JAN 81
B C077815 D A W 25 MAY 94
CHECK
CHECK 13 AUG 80
CHECK
DRAWN T S M 13 AUG 80
FO-5285 1-B