RoHS

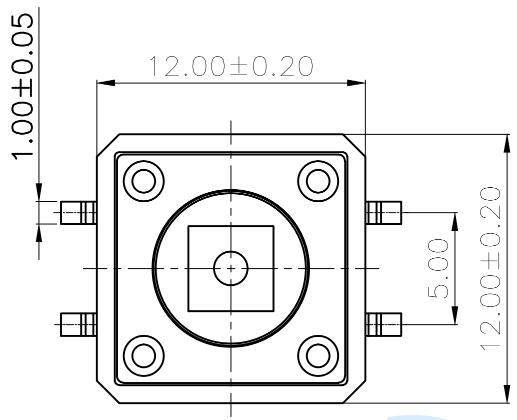

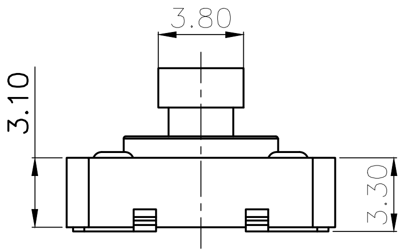

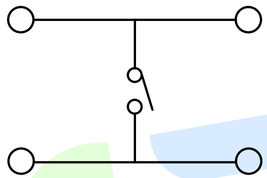

Circuit Diagram

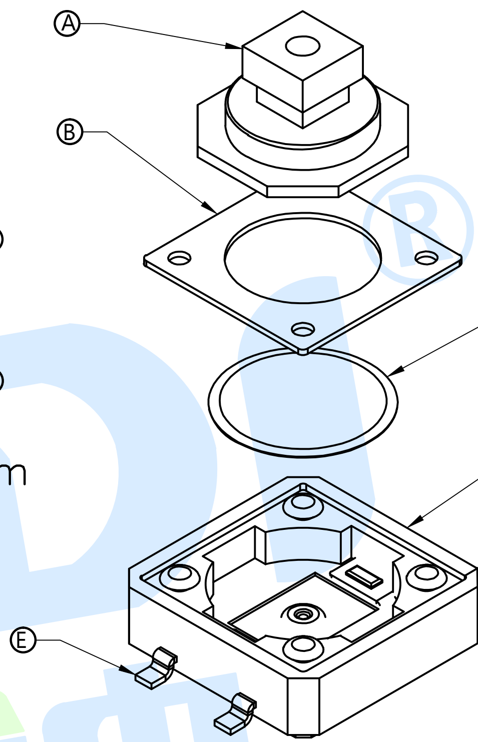

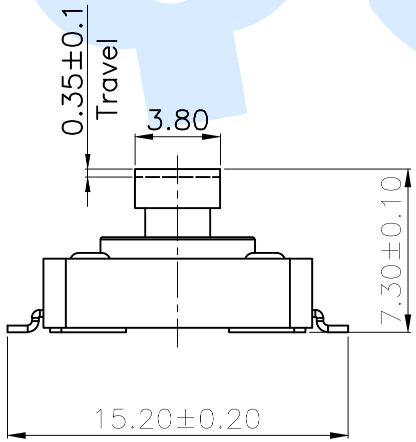

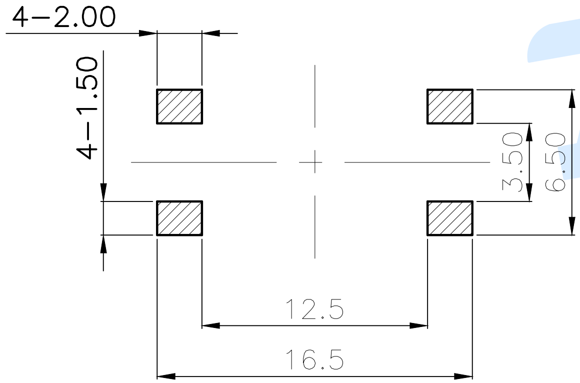

PCB Layout(Pattern side)

SHRAPNEL	
CODE	MATERIAL/QTY
D1	C5210/1PCS
D2	SUS/1PCS

OPERATING FORCE	
CODE	VIGOR
B1	120±30gf
B2	180±30gf
B3	250±30gf

NO.	Name	Number	Qty	Materil	Remarks
Ⓔ	Terminal		4	Brass	Silvering
Ⓓ	Reed		1	SUS	Silver covered
Ⓒ	Base		1	PPA	Black
Ⓑ	Cover		1	Brass	Plating Cu Sn
Ⓐ	Button		1	PPA	Yellow

YUANDI® Yuandi Electronics Co,Ltd

angle	±2°	design		date		name	TACT SWITCHS
10~30	±0.30	Review		date			
5~10	±0.20	Approved		date		model	TS-1094TS-B□D□-T-Y
~ 5	±0.10	Drawing number:					
Tolerance not specified		Proportion	1:1	unit	mm	gape number	A4

modify | Review | Approved