ROHS

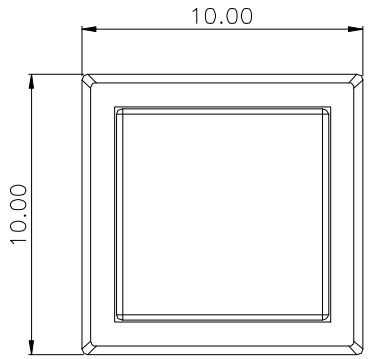

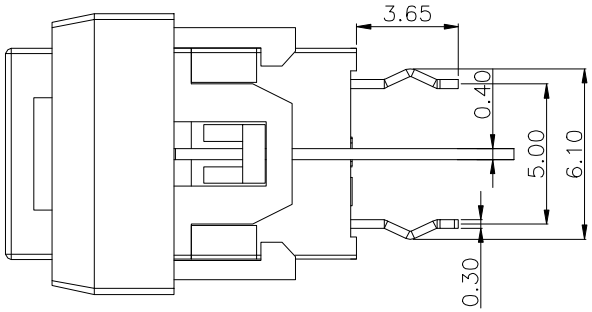

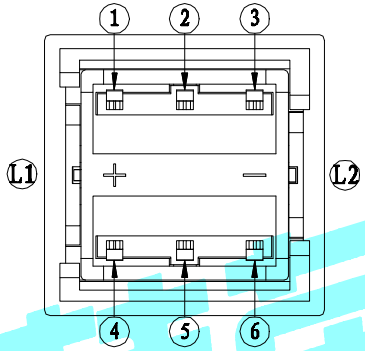

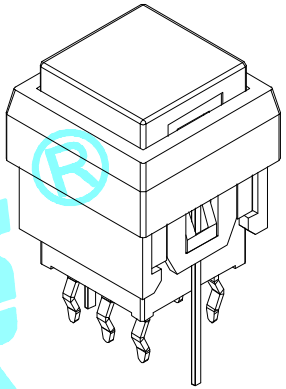

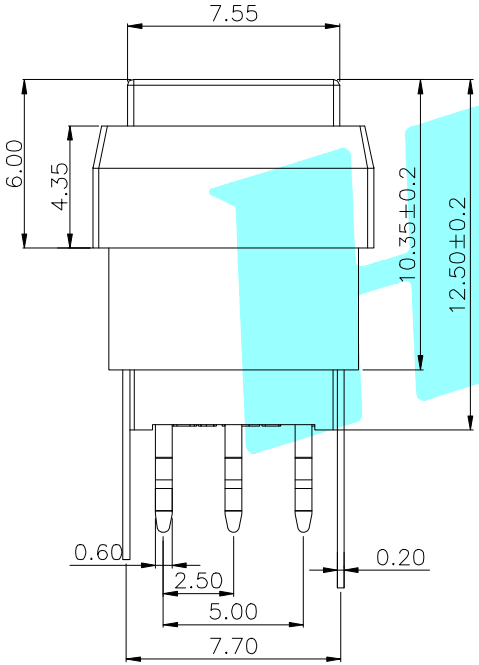

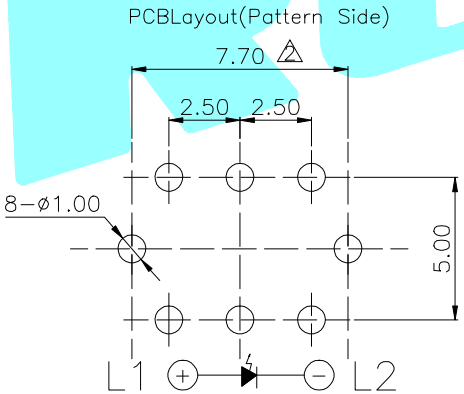

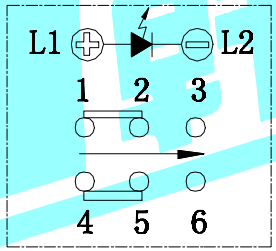

电路图

NO.	Operating Type	Part No.
1	Push To Lock(自锁)	K6-6131D□□-L1
2	Push No Lock(无锁)	K6-6131D□□-N1

LED colour(LED颜色)	Part No.（料号）	VR	IF	Recommended Operating	Nom	Max
Whiler(白色)	K6-6131D01-□□	DC5V	20mA	20mA	3.0V	3.6V
Red(紅色)	K6-6131D02-□□	DC5V	20mA	20mA	1.7V	2.4V
Blue(蓝色)	K6-6131D03-□□	DC5V	20mA	20mA	3.0V	3.6V
Green(绿色)	K6-6131D04-□□	DC5V	20mA	20mA	1.9V	2.4V
Yellow(黄色)	K6-6131D05-□□	DC5V	20mA	20mA	1.9V	2.4V
Orange(橙色)	K6-6131D06-□□	DC5V	20mA	20mA	1.9V	2.4V

ITEM	PART NAME	TER'NO.	QTY.	MATERIAL	FINISHING	REMARK
②	Terminal	——	3	Phosphor bronze	Au Plating	——
①	Housing	——	1	Nylon	Black	——

APPROVALS		DATE
DRAWN	J.X.Zhang	2020/06/01
CHECKED		
APPROVALS		

HRO韩荣® ELECTRONICS CO.,LTD

TITLE: LED Tact Switch

PART NO. K6-6131D□□-□□

UNIT: mm SCALE: 1:1 PROJ:

DRAWING NO. —— SHEET 1 OF 1

TOLERANCES ARE			ANGLE
	30~以上	±0.30	±2°
	10~30	±0.20	
	5~10	±0.15	
	~ 5	±0.10	

ECN NO.	REV.	DATE.	DESCRIPTION.	CHANGE.	CHECK.	APPRO.
——	C	——	△2	——	——	——
——	B	——	△1	——	——	——
——	A	——	NEW	——	——	——

HRO韩荣®