Strain relief housing; 6-pole; for 2 cables; 8.5 … 13.5 mm; 55 mm; black

www.wago.com/770-506/029-000

Color:

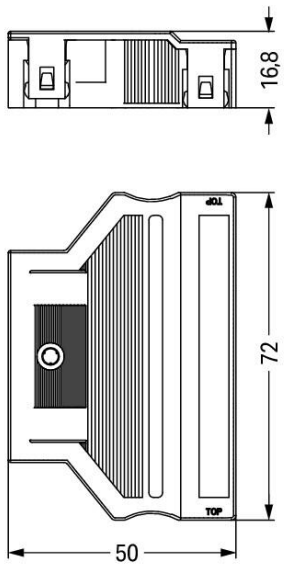

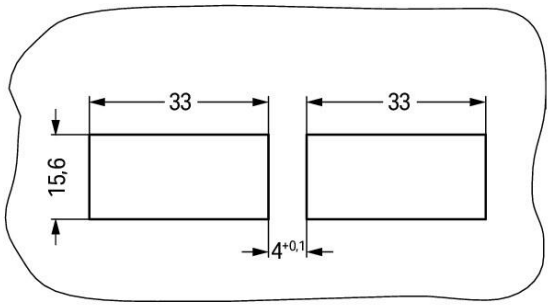

Plate thickness: 0.5 … 2 mm
Cutout tolerance: + 0.1 mm

Straight design

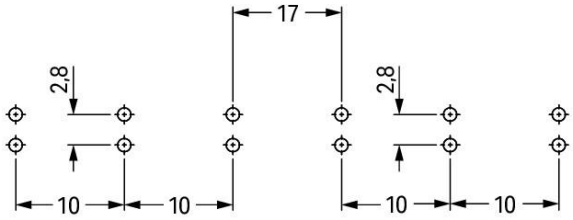

Drilled hole diameter: $1.5^{+0.1}$ mm

Subject to changes. Please also observe the further product documentation!

WAGO GmbH & Co. KG
Hansastr. 27
32423 Minden
Phone: +49571 887-0 | Fax: +49571 887-169
Email: info.de@wago.com | Web: www.wago.com

Do you have any questions about our products?
We are always happy to take your call at +49 (571) 887-44222.

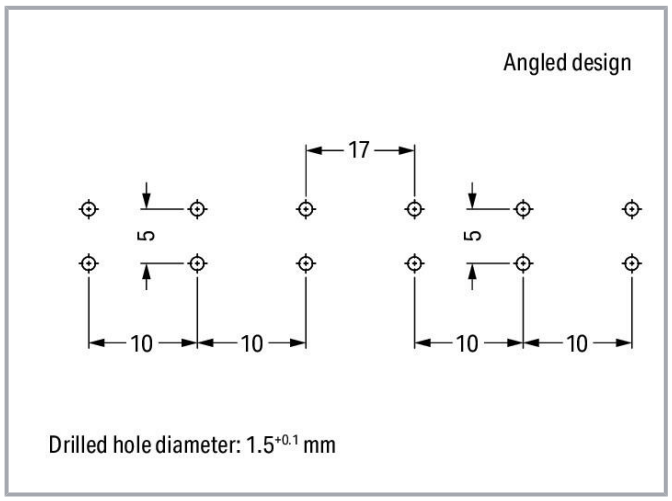

Item description

Strain relief housing *WINSTA*® MIDI 6-pole

Thanks to the strain relief housing from the *WINSTA*® MIDI product line, error-free installation is ensured. You can rely on the quality of WINSTA® components from WAGO for your electrical installation accessories too. The *WINSTA*® MIDI product line offers total flexibility for the electrical installation. With its Push-in CAGE CLAMP® spring pressure connection technology, it achieves error-free, time-saving installation and offers customization for meeting all installation requirements. The strip length is 55 mm.

Lower costs through fast commissioning and elimination of service expenses – solutions from *WINSTA*® MIDI

The WINSTA® Pluggable Connection System allows pluggable electrical installation. This saves time, lowers costs, and reduces the need for servicing. Choose durability and quality – with protection against mismating from WAGO makes the installation of electrical components noticeably easier.

-
- simple circuits
- rapid, structured electrical installation

Data
Connection data

Subject to changes. Please also observe the further product documentation!

WAGO GmbH & Co. KG
Hansastr. 27
32423 Minden
Phone: +49571 887-0 | Fax: +49571 887-169
Email: info.de@wago.com | Web: www.wago.com

Do you have any questions about our products?
We are always happy to take your call at +49 (571) 887-44222.

Connection 1

Pole number	6
Connectable sheathed cable diameter	8.5 … 13.5 mm
Strip length (outer insulation)	55 mm

Physical data

Width	72 mm / 2.835 inches
Height	16.8 mm / 0.661 inches
Depth	50 mm / 1.969 inches

Material data

Note (material data)	Information on material specifications can be found here
Color	black
Insulation material	Polyamide (PA66)
Flammability class per UL94	V0
Fire load	0.523 MJ
Weight	16.1 g

Environmental requirements

Processing temperature	-5 … +40 °C
Continuous operating temperature	-35 … +85 °C
Note on continuous operating temperature	Insulating parts for temperatures ≤ 105 °C

Commercial data

eCl@ss 10.0	27-44-06-92
eCl@ss 9.0	27-44-06-92
ETIM 8.0	EC002863
ETIM 7.0	EC002863
PU (SPU)	20 pcs
Packaging type	box
Country of origin	DE
GTIN	4045454001773
Customs tariff number	39269097900

Subject to changes. Please also observe the further product documentation!

WAGO GmbH & Co. KG
Hansastr. 27
32423 Minden
Phone: +49571 887-0 | Fax: +49571 887-169
Email: info.de@wago.com | Web: www.wago.com

Do you have any questions about our products?
We are always happy to take your call at +49 (571) 887-44222.

Environmental Product Compliance

RoHS Compliance Status	Compliant,No Exemption

Approvals / Certificates

Approvals for marine applications

Logo	Approval	Additional Approval Text	Certificate name
	LR Lloyds Register	IEC 61984	LR22429487TA

Optional accessories

Marking accessories

Marking strip

Item no.: 210-333
Marking strips; as a DIN A4 sheet; Strip width 6 mm; Strip length 182 mm; plain; Self-adhesive; white

www.wago.com/210-333

Downloads

Documentation

Bid Text

770-506/029-000 X81 - Datei	2019 Feb 19	xml 2.9 kB	Download
770-506/029-000 doc - Datei	2015 Jan 6	doc 24.1 kB	Download

CAD/CAE-Data

CAD data

2D/3D Models 770-506/029-000	URL	Download

CAE data

WSCAD Universe 770-506/029-000	URL	Download

Subject to changes. Please also observe the further product documentation!

WAGO GmbH & Co. KG
Hansastr. 27
32423 Minden
Phone: +49571 887-0 | Fax: +49571 887-169
Email: info.de@wago.com | Web: www.wago.com

Do you have any questions about our products?
We are always happy to take your call at +49 (571) 887-44222.

ZUKEN Portal 770-506/029-000	URL	Download
WSCAD Universe 770-506/029-000	URL	Download

Asset Administration Shell

Asset Administration Shell 770-506/029-000	URL	Download

Environmental Product Compliance

Compliance Search

Environmental Product Compliance 770-506/029-000 Strain relief housing; 6-pole; for 2 cables; 8.5 … 13.5 mm; 55 mm; black	URL	Download

Installation Notes

Application

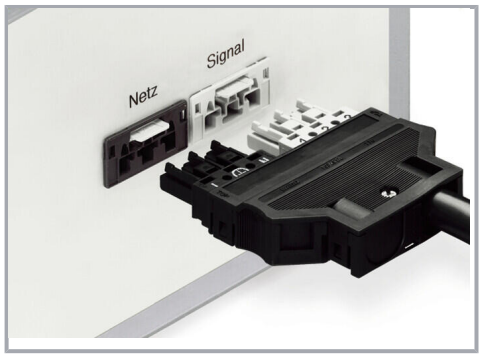

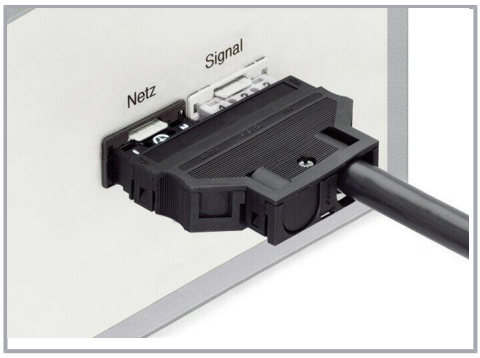

Snap-on type strain relief housings for:

- Two 3-pole sockets
- Two 3-pole plugs
- Three-pole socket and plug

Product family

WINSTA® MIDI
Show all products from the family

Subject to changes. Please also observe the further product documentation!

WAGO GmbH & Co. KG
Hansastr. 27
32423 Minden
Phone: +49571 887-0 | Fax: +49571 887-169
Email: info.de@wago.com | Web: www.wago.com

Do you have any questions about our products?
We are always happy to take your call at +49 (571) 887-44222.