**Data sheet | Item number: 770-854/064-000**

Plug for PCBs; straight; 4-pole; Cod. B; gray

www.wago.com/770-854/064-000

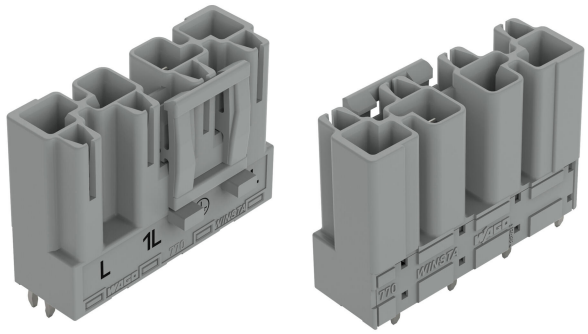

Color:

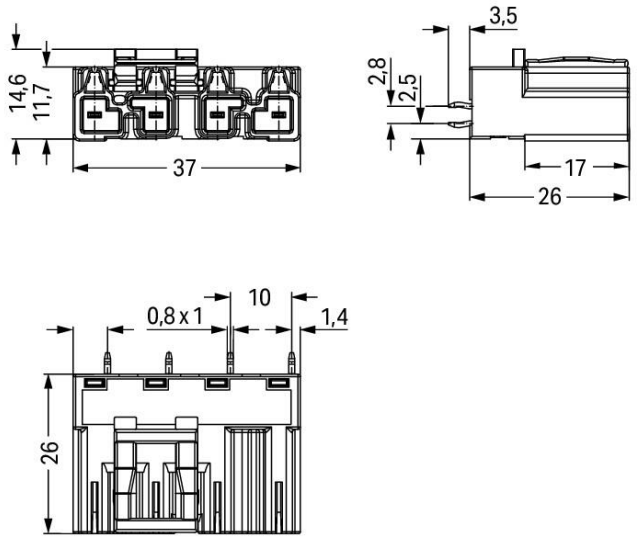


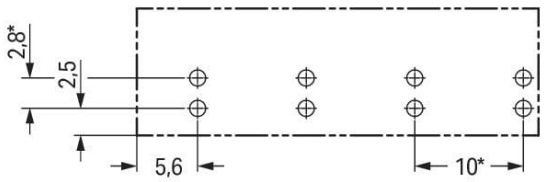


* ± 0.05 mm
Drilled hole diameter: $1.5^{+0.1}$ mm

Subject to changes. Please also observe the further product documentation!

WAGO GmbH & Co. KG
Hansastr. 27
32423 Minden
Phone: +49571 887-0 | Fax: +49571 887-169
Email: info.de@wago.com | Web: www.wago.com

Do you have any questions about our products?
We are always happy to take your call at +49 (571) 887-44222.

## Item description

### Male connector/plug *WINSTA*® MIDI 4-pole

Permanently secure installations through distinctive connection technology: The *WINSTA*® MIDI male connector/plug. Our pluggable PCB connectors give you a universal pluggable connection system for your devices that meets all the requirements for a robust device connection that is easy to put into operation. The color coding and mechanical coding of the pcb connectors ensure error-free installation of the individual components – including protection against mismating. Solutions like the *WINSTA*® MIDI pcb connectors with B coding are appropriate for process control, such as for lighting or in data networks. The rated current and voltage are important criteria for selecting a pcb connectors: They provide information about possible domains of use and applications. This product has a current rating of 25 A – as a result it is suitable for powerful loads. The *WINSTA*® MIDI Pluggable Connection System with Push-in CAGE CLAMP® spring pressure connection technology facilitates safe electrification. Due to the included test slot, it is possible to check connections even when they are plugged in. This saves time, labor, and money.

### Lower costs through fast commissioning and elimination of service expenses – solutions from *WINSTA*® MIDI

The WINSTA® Pluggable Connection System is perfectly tailored to the very strict requirements of building installation. It makes electrical installation pluggable, and thus more efficient, more reliable, and error-free. Use of this pre-assembled system reduces assembly times and errors during installation at the construction site. Enjoy the benefits of the pluggable version of our maintenance-free spring pressure connection technology too! Plan your installation with with protection against mismating from WAGO.

- 
- pcb connectors with protection against mismating
- for automation controllers
- with B coding for controllers such as sun blinds and lighting fixtures
- quick replacement of defective units during ongoing operation

## Data
## Notes

| | |
|---|---|
| Variants: | Other pole markings<br>Other versions (or variants) can be requested from WAGO Sales or configured at https://configurator.wago.com/. |

## Electrical data

### Ratings per IEC/EN

| | |
|---|---|
| Ratings per | IEC/EN 60664-1 |

Subject to changes. Please also observe the further product documentation!

WAGO GmbH & Co. KG
Hansastr. 27
32423 Minden
Phone: +49571 887-0 | Fax: +49571 887-169
Email: info.de@wago.com | Web: www.wago.com

Do you have any questions about our products?
We are always happy to take your call at +49 (571) 887-44222.

| | |
|---|---|
| Nominal voltage (III/3) | 400 V |
| Rated impulse voltage (III/3) | 6 kV |
| Rated current | 25 A |
| Legend (ratings) | (III / 3) ≙ Overvoltage category III / Pollution degree 3 |

## Ratings per IEC/EN – Notes

| | |
|---|---|
| Note (rated current) | 25 A for 3-pole load<br>20 A for 4-pole load |

## Ratings per UL 1977

| | |
|---|---|
| Note for the US market | Some versions may also be used for current interruption in accordance with the UL certificate in select applications with currents below 16 A and voltages up to 600 V. For further information, please contact your local sales office. |
| Rated voltage (UL 1977) | 600 V |
| Rated current UL 1977 | 23 A |

## General information

| | |
|---|---|
| Note on contact resistance | approx. 1 mΩ of contact resistance<br>approx. 0.25 mΩ contact transition plug/socket |

## Connection data

| | |
|---|---|
| Total number of potentials | 4 |
| Number of levels | 1 |

## Connection 1

| | |
|---|---|
| Pole number | 4 |

## Physical data

| | |
|---|---|
| Pin spacing | 10 mm / 0.394 inches |
| Width | 37 mm / 1.457 inches |
| Height | 29.5 mm / 1.161 inches |
| Height from the surface | 26 mm / 1.024 inches |
| Depth | 14.6 mm / 0.575 inches |
| Solder pin length | 3.5 mm |
| Solder pin dimensions | 1 x 0.8 mm |
| Drilled hole diameter with tolerance | $1.5^{(-0.1 \ldots +0.1)}$ mm |

Subject to changes. Please also observe the further product documentation!

WAGO GmbH & Co. KG
Hansastr. 27
32423 Minden
Phone: +49571 887-0 | Fax: +49571 887-169
Email: info.de@wago.com | Web: www.wago.com

Do you have any questions about our products?
We are always happy to take your call at +49 (571) 887-44222.

## Mechanical Data

| | |
|---|---|
| Application | Control technology |
| Coding | B |
| Variable coding | Yes |
| Marking | L 1L ⏚ 2L |
| Potential marking | L 1L ⏚ 2L |
| Mating force of a plug-in connection | approx. 20 … 70 N (depending on pole number) |
| Retention force of a plug-in connection | Locked: > 80 N |
| Unmating force of a plug-in connection | Unlocked: approx. 20 … 70 N (depending on pole number) |
| Number of mating cycles | 200, without resistive load |
| Design | straight |

## Plug-in connection

| | |
|---|---|
| Contact type (pluggable connector) | Male connector/plug |
| Connector (connection type) | for PCB |
| Mismating protection | Yes |
| Note on mismating protection | All *WINSTA*® components are 100% protected against mismating when:<br>a.) plugging different numbers of poles<br>b.) plugging while rotated 180<br>c.) plugging while laterally staggered<br>d.) plugging one pole |
| Mating direction to the PCB | 90 ° |
| Locking lever | yes |
| Locking of plug-in connection | locking lever |
| Note on locking system | All connectors for mounted installations (snap-in versions for lighting fixtures or devices, all types of PCB and distribution connectors) are factory-equipped with locking levers to ensure plugs and sockets are securely locked. Additional locking levers are only required for flying leads (plug/socket). |

## PCB contact

| | |
|---|---|
| PCB contact | THT |
| Solder pin arrangement | 2 in-line solder pins/pole |
| Number of solder pins per potential | 2 |

Subject to changes. Please also observe the further product documentation!

WAGO GmbH & Co. KG
Hansastr. 27
32423 Minden
Phone: +49571 887-0 | Fax: +49571 887-169
Email: info.de@wago.com | Web: www.wago.com

Do you have any questions about our products?
We are always happy to take your call at +49 (571) 887-44222.

## Material data

| | |
|---|---|
| Note (material data) | Information on material specifications can be found here |
| Color | gray |
| Insulation material | Polyamide (PA66) |
| Flammability class per UL94 | V0 |
| Clamping spring material | Chrome-nickel spring steel (CrNi) |
| Contact material | Copper or copper alloy; surface-treated |
| Contact plating | Tin |
| Fire load | 0.206 MJ |
| Weight | 8.8 g |

## Environmental requirements

| | |
|---|---|
| Processing temperature | -5 … +40 °C |
| Continuous operating temperature | -35 … +85 °C |
| Note on continuous operating temperature | Insulating parts for temperatures ≤ 105 °C |

## Commercial data

| | |
|---|---|
| eCl@ss 10.0 | 27-44-06-05 |
| eCl@ss 9.0 | 27-44-06-05 |
| ETIM 8.0 | EC002560 |
| ETIM 7.0 | EC002560 |
| PU (SPU) | 50 pcs |
| Packaging type | box |
| Country of origin | PL |
| GTIN | 4050821555599 |
| Customs tariff number | 85366990990 |

## Environmental Product Compliance

| | |
|---|---|
| RoHS Compliance Status | Compliant,No Exemption |

## Approvals / Certificates

### General approvals

| Logo | Approval | Additional Approval Text | Certificate name |
|---|---|---|---|

Subject to changes. Please also observe the further product documentation!

WAGO GmbH & Co. KG
Hansastr. 27
32423 Minden
Phone: +49571 887-0 | Fax: +49571 887-169
Email: info.de@wago.com | Web: www.wago.com

Do you have any questions about our products?
We are always happy to take your call at +49 (571) 887-44222.

| | | |
|---|---|---|
| **cURus**<br>Underwriters Laboratories Inc. | UL 1977 | E45171 |

## Counterpart

**Item no.770-244/064-000**
Socket; 4-pole; Cod. B; 4,00 mm²; gray

www.wago.com/770-244/064-000

## Required accessories

**Cover**

Cover

**Item no.: 770-360**
Lockout cap; for plugs; 5-pole; separable; yellow

www.wago.com/770-360

## Optional accessories

**Coding**

Coding

**Item no.: 770-401**
Coding pin; for plugs; Plastic; gray

www.wago.com/770-401

## Downloads

## CAD/CAE-Data

**CAD data**

| | | |
|---|---|---|
| 2D/3D Models 770-854/064-000 | URL | Download |

**PCB Design**

| | | |
|---|---|---|
| Symbol and Footprint 770-854/064-000 | URL | Download |

CAx data for your PCB design, consisting of "schematic symbols and PCB footprints", allow easy integration of the WAGO component into your development environment.

**Supported formats:**

- Accel EDA 14 & 15
- Altium 6 to current version
- Cadence Allegro

Subject to changes. Please also observe the further product documentation!

WAGO GmbH & Co. KG
Hansastr. 27
32423 Minden
Phone: +49571 887-0 | Fax: +49571 887-169
Email: info.de@wago.com | Web: www.wago.com

Do you have any questions about our products?
We are always happy to take your call at +49 (571) 887-44222.

- DesignSpark
- Eagle Libraries
- KiCad
- Mentor Graphics BoardStation
- Mentor Graphics Design Architect
- Mentor Graphics Design Expedition 99 and 2000
- OrCAD 9.X PCB and Capture
- PADS PowerPCB 3, 3.5, 4.X, and 5.X
- PADS PowerPCB and PowerLogic 3.0
- PCAD 2000, 2001, 2002, 2004, and 2006
- Pulsonix 8.5 or newer
- STL
- 3D STEP
- TARGET 3001!
- View Logic ViewDraw
- Quadcept
- Zuken CadStar 3 and 4
- Zuken CR-5000 and CR-8000

PCB Component Libraries (EDA), PCB CAD Library Ultra Librarian

**CAE data**

| | | |
|---|---|---|
| ZUKEN Portal 770-854/064-000 | URL | Download |

**Asset Administration Shell**

| | | |
|---|---|---|
| Asset Administration Shell 770-854/064-000 | URL | Download |

## Environmental Product Compliance

**Compliance Search**

| | | |
|---|---|---|
| Environmental Product Compliance 770-854/064-000<br>Plug for PCBs; straight; 4-pole; Cod. B; gray | URL | Download |

## Installation Notes

Subject to changes. Please also observe the further product documentation!

WAGO GmbH & Co. KG
Hansastr. 27
32423 Minden
Phone: +49571 887-0 | Fax: +49571 887-169
Email: info.de@wago.com | Web: www.wago.com

Do you have any questions about our products?
We are always happy to take your call at +49 (571) 887-44222.

## Product family

**WINSTA® MIDI**
Show all products from the family

Subject to changes. Please also observe the further product documentation!

WAGO GmbH & Co. KG
Hansastr. 27
32423 Minden
Phone: +49571 887-0 | Fax: +49571 887-169
Email: info.de@wago.com | Web: www.wago.com

Do you have any questions about our products?
We are always happy to take your call at +49 (571) 887-44222.