Data sheet | Item number: 770-608

5-way distribution connector; 3-pole; Cod. A; 1 input; 5 outputs; outputs on both sides; black

www.wago.com/770-608

Color:

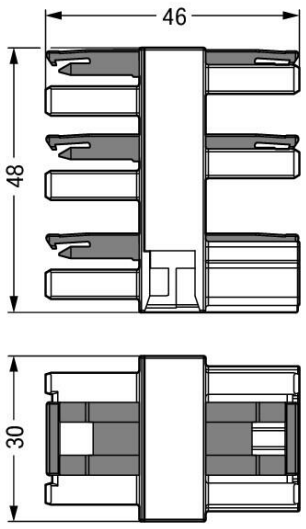

Item description

Distribution connector *WINSTA*® MIDI with protection type IP20

The *WINSTA*® MIDI distribution connector with protection type IP20 provides the foundation for installation of fine-stranded and solid conductors. Whether on PCBs, in control cabinets or for connecting lights – pluggable installation connectors from WAGO allow you to make connections according to various requirements in seconds. The coding options reduce installation errors, allowing fast, secure wiring of all components. The pluggable installation connector offers protection against contact with live components in accordance with protection type IP20 (When mated:

Subject to changes. Please also observe the further product documentation!

WAGO GmbH & Co. KG
Hansastr. 27
32423 Minden
Phone: +49571 887-0 | Fax: +49571 887-169
Email: info.de@wago.com | Web: www.wago.com

Do you have any questions about our products?
We are always happy to take your call at +49 (571) 887-44222.

IP2xC (These compact connectors are not designed for use in open, easily accessible areas!)). Thanks to the color coding and mechanical A coding of *WINSTA*® MIDI pluggable installation connectors, you can clearly distinguish different circuits. The rated current and voltage are important criteria for selecting a pluggable installation connector: They tell us about the product's domains of use. This product has a current rating of 25 A – therefore it is suitable for high power loads. The *WINSTA*® MIDI Pluggable Connection System with Push-in CAGE CLAMP® spring pressure connection technology facilitates precise electrification. Thanks to the included test slot, connections can be checked even when they are plugged in. This saves time, labor, and money.

WINSTA® MIDI solutions for your electrical installation – protected against mismating and maintenance-free

The WINSTA® Pluggable Connection System allows pluggable electrical installation. This saves time, lowers costs, and reduces the need for servicing. Choose durability and quality – with protection type IP20 from WAGO makes the installation of electrical components visibly easier.

-
- protection against mismating eliminates errors
- simple circuits
- with A coding for a large number of uses
- custom-engineered solutions
- quick replacement of defective units during ongoing operation

Data
Electrical data

Ratings per IEC/EN

Ratings per	IEC/EN 60664-1
Nominal voltage (III/3)	250 V
Rated impulse voltage (III/3)	4 kV
Rated current	25 A
Legend (ratings)	(III / 3) ≙ Overvoltage category III / Pollution degree 3

Ratings per UL 1977

Note for the US market	Some versions may also be used for current interruption in accordance with the UL certificate in select applications with currents below 16 A and voltages up to 600 V. For further information, please contact your local sales office.
Rated voltage (UL 1977)	600 V
Rated current UL 1977	23 A

WAGO GmbH & Co. KG
Hansastr. 27
32423 Minden
Phone: +49571 887-0 | Fax: +49571 887-169
Email: info.de@wago.com | Web: www.wago.com

Do you have any questions about our products?
We are always happy to take your call at +49 (571) 887-44222.

General information

Note on contact resistance	approx. 1 mΩ of contact resistance approx. 0.25 mΩ contact transition plug/socket

Connection data

Total number of potentials	3
PE function	Preceding PE contact

Connection 1

Pole number	3

Physical data

Pin spacing	10 mm / 0.394 inches
Width	30 mm / 1.181 inches
Height	48 mm / 1.89 inches
Depth	46 mm / 1.811 inches

Mechanical Data

Application	General mains applications
Coding	A
Marking	L ⏚ N
Potential marking	L ⏚ N
Mating force of a plug-in connection	approx. 20 … 70 N (depending on pole number)
Retention force of a plug-in connection	When locked: > 80 N
Unmating force of a plug-in connection	Unlocked: approx. 20 … 70 N (depending on pole number)
Number of mating cycles	200, without resistive load
Type of distribution box	Distribution connector, 5-way
Protection type	IP20; When mated: IP2xC (These compact connectors are not designed for use in open, easily accessible areas!)

Plug-in connection

Contact type (pluggable connector)	Socket/plug
Mismating protection	Yes
Note on mismating protection	All *WINSTA*® components are 100% protected against mismating when:

Subject to changes. Please also observe the further product documentation!

WAGO GmbH & Co. KG
Hansastr. 27
32423 Minden
Phone: +49571 887-0 | Fax: +49571 887-169
Email: info.de@wago.com | Web: www.wago.com

Do you have any questions about our products?
We are always happy to take your call at +49 (571) 887-44222.

	a.) plugging different numbers of poles b.) plugging while rotated 180 c.) plugging while laterally staggered d.) plugging one pole
Locking lever	yes
Locking of plug-in connection	locking lever
Note on locking system	All connectors for mounted installations (snap-in versions for lighting fixtures or devices, all types of PCB and distribution connectors) are factory-equipped with locking levers to ensure plugs and sockets are securely locked. Additional locking levers are only required for flying leads (plug/socket).
Number of locking levers	6

Material data

Note (material data)	Information on material specifications can be found here
Color	black
Insulation material	Polyamide (PA66)
Flammability class per UL94	V0
Contact material	Copper or copper alloy; surface-treated
Contact plating	Tin
Fire load	0.891 MJ
Weight	37 g

Environmental requirements

Processing temperature	-5 … +40 °C
Continuous operating temperature	-35 … +85 °C
Note on continuous operating temperature	Insulating parts for temperatures ≤ 105 °C

Commercial data

eCl@ss 10.0	27-44-06-03
eCl@ss 9.0	27-44-06-03
ETIM 8.0	EC002567
ETIM 7.0	EC002567
PU (SPU)	25 pcs
Packaging type	box
Country of origin	DE
GTIN	4045454251376

Subject to changes. Please also observe the further product documentation!

WAGO GmbH & Co. KG
Hansastr. 27
32423 Minden
Phone: +49571 887-0 | Fax: +49571 887-169
Email: info.de@wago.com | Web: www.wago.com

Do you have any questions about our products?
We are always happy to take your call at +49 (571) 887-44222.

Customs tariff number	85366990990

Environmental Product Compliance

RoHS Compliance Status	Compliant,No Exemption

Approvals / Certificates

General approvals

Logo	Approval	Additional Approval Text	Certificate name
	CCA DEKRA Certification B.V.	IEC 61535	NL -84761
	CCA DEKRA Certification B.V.	EN 61535	71-123228
	cURus Underwriters Laboratories Inc.	UL 1977	E45171
	cURus Underwriters Laboratories Inc.	UL 1059	E 45172

Declarations of conformity and manufacturer's declarations

Logo	Approval	Additional Approval Text	Certificate name
	EU-Declaration of Conformity WAGO GmbH & Co. KG	-	-

Approvals for marine applications

Logo	Approval	Additional Approval Text	Certificate name
	ABS American Bureau of Shipping	-	19-HG1868589-PDA
	DNV GL Det Norske Veritas, Germanischer Lloyd	-	TAE00001Z6

Subject to changes. Please also observe the further product documentation!

WAGO GmbH & Co. KG
Hansastr. 27
32423 Minden
Phone: +49571 887-0 | Fax: +49571 887-169
Email: info.de@wago.com | Web: www.wago.com

Do you have any questions about our products?
We are always happy to take your call at +49 (571) 887-44222.

LR Lloyds Register	IEC 61984	LR22429487TA

Counterpart

	Item no.770-103 Socket; with strain relief housing; 3-pole; Cod. A; 4,00 mm²; black	www.wago.com/770-103
	Item no.770-113 Plug; with strain relief housing; 3-pole; Cod. A; 4,00 mm²; black	www.wago.com/770-113
	Item no.770-203/035-000 Socket; with strain relief housing; 3-pole; Cod. A; 4,00 mm²; black	www.wago.com/770-203/035-000
	Item no.770-203 Socket; 3-pole; Cod. A; 4,00 mm²; black	www.wago.com/770-203
	Item no.770-213 Plug; 3-pole; Cod. A; 4,00 mm²; black	www.wago.com/770-213
	Item no.771-9993/006-101 pre-assembled interconnecting cable; Eca; Socket/plug; 3-pole; Cod. A; H05VV-F 3G 1.5 mm²; 1 m; 1,50 mm²; black	www.wago.com/771-9993/006-101
	Item no.770-213/035-000 Plug; with strain relief housing; 3-pole; Cod. A; 4,00 mm²; black	www.wago.com/770-213/035-000
	Item no.771-9993/106-101 pre-assembled connecting cable; Eca; Socket/open-ended; 3-pole; Cod. A; H05VV-F 3G 1.5 mm²; 1 m; 1,50 mm²; black	www.wago.com/771-9993/106-101
	Item no.771-9993/206-101 pre-assembled connecting cable; Eca; Plug/open-ended; 3-pole; Cod. A; H05VV-F 3G 1.5 mm²; 1 m; 1,50 mm²; black	www.wago.com/771-9993/206-101

Optional accessories

Mounting

Mounting accessories

	Item no.: 770-623 Mounting plate; 3-pole; for distribution connectors; Plastic; black	www.wago.com/770-623
	Item no.: 770-673 Mounting plate; 3-pole; for distribution connectors; Plastic; white	www.wago.com/770-673

Subject to changes. Please also observe the further product documentation!

WAGO GmbH & Co. KG
Hansastr. 27
32423 Minden
Phone: +49571 887-0 | Fax: +49571 887-169
Email: info.de@wago.com | Web: www.wago.com

Do you have any questions about our products?
We are always happy to take your call at +49 (571) 887-44222.

Cover

Cover

	Item no.: 770-360 Lockout cap; for plugs; 5-pole; separable; yellow	www.wago.com/770-360
	Item no.: 770-201 Lockout cap; 12-pole, separable; for sockets; Plastic; black	www.wago.com/770-201
	Item no.: 770-221 Lockout cap; 12-pole, separable; for sockets; Plastic; white	www.wago.com/770-221

Downloads

Documentation

Bid Text

770-608 X81 - Datei	2019 Feb 19	xml 2.8 kB	Download
770-608 doc - Datei	2015 Mar 12	doc 23.6 kB	Download
ausschreiben.de 770-608		URL	Download

CAD/CAE-Data

CAD data

2D/3D Models 770-608	URL	Download

CAE data

EPLAN Data Portal 770-608	URL	Download
WSCAD Universe 770-608	URL	Download
ZUKEN Portal 770-608	URL	Download

Asset Administration Shell

Asset Administration Shell 770-608	URL	Download

Subject to changes. Please also observe the further product documentation!

WAGO GmbH & Co. KG
Hansastr. 27
32423 Minden
Phone: +49571 887-0 | Fax: +49571 887-169
Email: info.de@wago.com | Web: www.wago.com

Do you have any questions about our products?
We are always happy to take your call at +49 (571) 887-44222.

Environmental Product Compliance

Compliance Search

Environmental Product Compliance 770-608 5-way distribution connector; 3-pole; Cod. A; 1 input; 5 outputs; outputs on both sides; black	URL	Download

Installation Notes

Installation

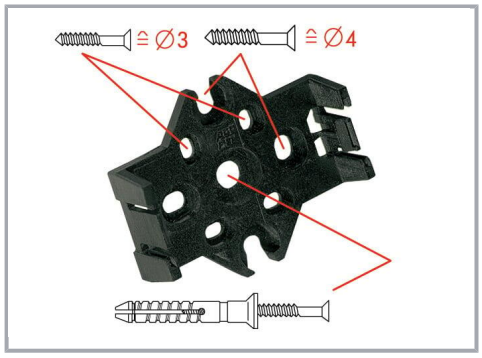

Mounting plates can be secured using commercially available screws or nail-drive anchors.

The distribution connectors snap together when attached to the mounting plate.

To release the distribution connector, unlock the latch using a screwdriver.

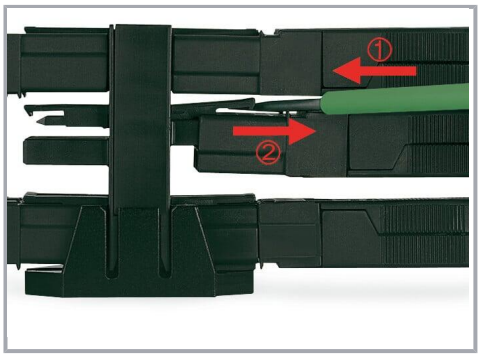

All distribution connector connections are locked and protected against accidental disconnection directly after mating. Locking of any connection is released using a screwdriver, even if all connections are used.

Product family

Subject to changes. Please also observe the further product documentation!

WAGO GmbH & Co. KG
Hansastr. 27
32423 Minden
Phone: +49571 887-0 | Fax: +49571 887-169
Email: info.de@wago.com | Web: www.wago.com

Do you have any questions about our products?
We are always happy to take your call at +49 (571) 887-44222.

WINSTA® MIDI
Show all products from the family

Subject to changes. Please also observe the further product documentation!

WAGO GmbH & Co. KG
Hansastr. 27
32423 Minden
Phone: +49571 887-0 | Fax: +49571 887-169
Email: info.de@wago.com | Web: www.wago.com

Do you have any questions about our products?
We are always happy to take your call at +49 (571) 887-44222.